Warrenton Administrative Building

Warrenton, Virginia

WARRENTON ADMINISTRATIVE BUILDING MODERNIZATION PROJECT

Design Data Handbook (DDH)

April 26, 2022

TABLE OF CONTENTS **PAGE**

1.	Executive Summary	2
2.	Civil Engineering/Site Description	3
3.	Structural Engineering Description	5
4.	Architectural Description	7
5.	Interiors Description	11
6.	Mechanical Engineering Description	13
7.	Mechanical Controls Description	18
8.	Plumbing Description	21
9.	Electrical Engineering Description	30
10.	Communication Description	33
11.	Fire Protection/Detection Description	39
12.	Sustainability	44
13.	Codes and FAA Orders, Standards, and Reference Documents	49

APPENDICES

Appendix 1: Architectural – Data Sheets
Appendix 2: Architectural – WUFI Analysis
Appendix 3: Structural - Calculations
Appendix 4: Mechanical - Calculations and Data Sheets
Appendix 5: Plumbing - Calculations and Data Sheets
Appendix 6: Electrical – Calculations and Data Sheets
Appendix 7: Telecommunication – Data Sheets
Appendix 8: Fire Protection – Calculations and Data Sheets
Appendix 9: Sustainability – Checklist and Strategies Diagrams

1. Executive Summary

The 100% Design Submittal; to include drawings, specifications, and this Design Data Handbook (DDH); is hereby submitted to the Federal Aviation Administration (FAA) for the Warrenton Administrative Building (DCCA ADM) facility in Warrenton, Virginia. The scope of this modernization project has been established in the approved Jacobs Change Proposal D24-002 dated November 18, 2019. The cost estimate for this submittal will be submitted within two weeks of this deliverable.

The basis for this concept design draws from the FAA approved Program of Requirements and Design Charrette Report. A kickoff meeting with both FAA and Jacobs participants was held on April 20, 2021. This submission furthers the concepts reviewed and approved in the 35% submission dated 27 August 2021; 70% submission dated 17 November 2021; and 95% submission dated 21 January 2022.

The project scope is to develop a design-bid-build package for the modernization of the recently acquired FAA Warrenton Administrative Building (DCCA ADM) Facility, in Warrenton, Virginia. The existing 43,401 square-foot building was constructed in 2009 and consists of 2 floors above grade. The singularly sloped, flat roof supports four mechanical roof top units, miscellaneous supporting mechanical units, and an antenna. The project will renovate the entire facility, along with all its systems. The exterior envelope will remain along with interior egress stairs and elevator. In addition, various civil scope items may be incorporated to improve parking, sanitary sewer routing, or pedestrian access to the existing Potomac Consolidated TRACON (PCT) campus across the street.

Discipline specific calculations and/or data sheets are provided in Appendices 1 through 12 of this DDH.

Overviews of the existing conditions and a description of the anticipated work for each discipline are provided in the following sections for each of the design disciplines.

See Section 2.13 of this document for applicable codes and standards.

2. Civil Engineering/Site Description

The civil site work identified for this project includes converting the existing shared force main sanitary sewer into an independent gravity sewer, asphalt pavement milling and overlay throughout the site, new concrete pavement associated with dumpsters, site utility improvements supporting the emergency generator, pedestrian site access improvements, and an outdoor pavilion area.

Conversation from Shared Forced Main Sanitary Sewer to Gravity Sewer

Currently the DCCA ADM Building is serviced by a force main sanitary sewer that exits the building in the Southeast corner and runs to a lift station that is located near the southern property line. The proposed plan converts the sanitary sewer system into a gravity system, flowing from here the sanitary sewer exits the DCCA ADM building to the Fauquier County Water and Sanitation Assets Authority (FCWSA) sanitary sewer within Macintosh Drive.

The proposed sanitary sewer system would incorporate 6”-8” Polyvinyl Chloride (PVC) pipe connecting manholes at every direction change. Cleanouts will also be used so that the pipe can be accessible at distances not to exceed 100’ within the FAA’s property. FCWSA will have to permit the sanitary sewer plans before construction can commence.

The existing sanitary sewer line will be abandoned in place and grouted. The existing lift station will remain in place since the adjacent property utilizes it as well.

Concrete Pavement for New Dumpster Pad

The current flexible pavement in front of the dumpsters, located south of the DCCA ADM building, displays fatigue cracking most likely due to the weight of the garbage trucks during loading, unloading, and maneuvering to access the dumpsters. A 6” thick concrete pad measuring 38’x 28’is proposed in front of the dumpsters, replacing the flexible pavement. The concrete pad will allow a garbage truck to access the dumpsters without damaging the road surface.

Miscellaneous concrete work is required in areas where utility trenches cross through concrete sidewalks and curb and gutters. These features will be replaced in kind.

Parking Lot and Service Road-Asphalt Mill and Overlay

The parking lot asphalt pavement is deteriorated with many large cracks. The existing asphalt will be milled 1-1/2-inches and overlaid with a new 1-1/2-inch surface course. The area of mill and overlay is approximately 52,700 square feet. In areas where the utility work requires trenches in the asphalt, the pavement will be a full-depth asphalt replacement.

The existing parking count is 174 parking spaces including 6 handicap spaces. The lot will be re-striped for 172 parking spaces including 4 standard handicap spaces and 2 van accessible handicap spaces. Standard spaces are a minimum of 9’-0” x 18’-0”. Standard and van accessible handicap spaces will be sized and striped in accordance with ABA/ADA requirements. The accessible

spaces will have signage painted on the pavement and vertical signage in accordance with ABA/ADA requirements.

The repaving of the asphalt surface will take place after the utility work is completed.

Pedestrian Improvements

The DCCA ADM site currently has 174 parking spaces, however the final building occupancy will require 250 parking spaces. Additional parking is being designed, under a different project, on the east side of Vint Hill Parkway in the vicinity of the gate for the Potomac Terminal RADAR Approach Control (TRACON). There is currently a sidewalk leading from the parking lot of the DCCA ADM building parking lot along Macintosh Dr., however it is terminated prior to reaching Vint Hill Parkway.

In this plan the 5' wide sidewalk is continued from where it ends on Macintosh Drive to the intersection at Vint Hill Parkway. A VDOT standard handicap curb ramp will be installed from the sidewalk to the roadway where a crosswalk will be installed. The sidewalk improvements along Vint Hill Parkway will require Virginia Department of Transportation (VDOT)approval and permitting.

Site Utilities

The new emergency generator will require 6" conduit for electrical connections and a 2" polyethylene natural gas line. The gas line suppling the gas meter will have to be enlarged which will be done by the utility provider.

An empty underground electrical conduit will be installed for future electric vehicle charging infrastructure in the west edge of the parking lot in the vicinity of the existing transformer. 10 parking spaces designated for future electrical vehicle charging will be striped. Electric vehicle charging signs will be installed but electrical vehicle charging stations are not included in this project work.

3. Structural Engineering Description

The primary structural engineering scope for this project is to support other discipline's designs. This includes the replacement of the front stairs and walkway framing, replacement of the skylight framing at the roof, demolition, and infill of slabs for the placement of pipework and providing structural support for mechanical equipment and an operable partition wall.

Front Stairwell and Walkway Replacement

The structural engineering work identified for this project includes the replacement of the front stairwell and walkway. The existing front stairs and second level walkway consisting of concrete filled deck and supporting beams will be demolished. In addition, a portion of the existing slab-on-ground will be demolished and replaced with a thickened slab to support the new stair bases. New beams and concrete filled deck will be provided to form the structure of a walkway at the top of the stairs. Steel tubes are designed to support the stair system. The structure of the risers at the base of the steps is comprised of cold-formed steel members and is delegated.

Skylight Replacement

The replacement of the skylight at the roof will require demolition of the existing structural system and structural support for the new skylight. The demolition will include removal of roof joists and a portion of the roof deck. Structural framing members are designed to support the new skylight.

Slab Demolition and Infill for Plumbing

Due to the relocation of the restrooms on the ground floor, several instances of underground pipework are required to be installed. This requires the demolition of a portion of the existing slab-on-ground for the placement of the plumbing. The areas will then be infilled with concrete and doweled into the existing slab.

Wall Demolition and Infill for Window

Along the south side of the building, a portion of the existing exterior wall is demolished for the addition of a new window. Masonry infill is added below the window for support.

Support for Mechanical Equipment

Four air handling units, each of operating weight of 3,200 lbs., at the center of the roof are being replaced. These new units will bear on the existing joists that support the existing units. In addition, exhaust fans will require penetration into the existing metal roof deck. The penetrations will be framed by angles to provide support for the opening.

Support for Operable Partition Wall

The addition of a new operable partition that separates the conference room space requires structural support. Steel beams have been added to the second-floor framing system to support the partition from above.

Support for Operable Partition Wall

An outside pergola structure is added along the east side of the building. The structure is formed of steel tube columns and beams. The tubes bear on shallow concrete footings. A bench structure is also designed from steel channels and brackets that attach to a concrete wall backing.

4. Architectural Description

The architectural scope of work was confirmed in the FAA Warrenton Administrative Building Final Charrette Report, issued August 3, 2021; and a related DCCA ADM Weekly Update meeting on July 21, 2021, that additionally confirmed architectural scope. The Charrette Report identified Concept 2 as the preferred concept of three initial design concepts presented during the Charrette. The Charette Report and related meeting minutes also identified the building exterior renovations to be included in the project. The 100% Design Submission reflects all previously confirmed architectural scope documented for construction. The planning features and the space types of Concept 2 that will be a part of the interior renovation are further noted in the Interiors Description to follow. The following will be a review of both the interior and exterior architectural scope of work identified to be included in this project.

The project architecture scope can be divided into the following components:

<u>Demolition</u>

1. Complete interior demolition excluding the elevator/elevator machine room, both egress stairs and two support spaces for electrical and fire protection located at the south entrance.
2. The interior furring at the exterior wall will remain in place, however existing blinds at windows will be removed.
3. Exterior demolition will include the removal of the roofing system down to the structural deck, roof skylights, the removal of the decorative coping element, and the removal of an overhead door and swinging door at the receiving area on the first floor (along with associated concrete wall areas) to allow for a new window opening to match the other adjacent window opening.

<u>Exterior Renovation and Alterations</u>

1. Replacement of the existing single membrane roofing system with a fully adhered TPO single membrane roofing system that includes, a cover board at deck and polyiso insulation with a stainless-steel wire mesh placed over the insulation, and topped by a protection board, and a fully adhered membrane. Other roof area additions include an OSHA compliant ladder to access the stair roof from the main roof and fall protection davits for the northern end of the building where parapet heights are lower than 42”. New mechanical equipment will be tied into the roofing system with prefabricated metal curbs and equipment support curbs.
2. Alteration of one exterior wall area at the existing Receiving Area that currently includes an overhead door and swinging door into a new window opening to match other building window openings. This work includes a new CMU wall area clad with a stucco system to matching the existing concrete finish of the building to create a new opaque wall area under the window.
3. Replacement of the decorative coping system at the roof parapet.
4. Replacement of the existing skylights with two larger aluminum framed skylights to be located over the communicating stair area.
5. Patio/Pergola - On the east side of the building (on the east side) a small patio with bench seating covered by a pergola has been located and fully detailed in the 100% submission.

<u>Interior Renovation and Alterations</u>

1. Interior Partitions - Gypsum wallboard (GWB) and metal stud partitions primarily up to the deck above to create the new interior spaces that include offices, conference rooms, toilet rooms and break rooms (among other spaces).
2. Interior Glazed Partitions -Aluminum framed glazed partitions with full height glazing to a height of 8’ and integrated into GWB partitions at private offices and conference rooms.
3. Communicating Stairs - Two communicating stairs to each side of the main central corridor and part of the lobby (at the north entry) that are directly adjacent to and integrated into stadium style seating areas. The stairs will be metal pan stairs clad with terrazzo and the stadium style seating will be composed of stepped cold formed metal framing with metal deck substrate that is clad in a wood finish.
4. New toilet spaces and plumbing fixtures.
5. Ceilings - 2 X 2 acoustical panel ceilings are to be located in private offices, conference rooms huddle rooms, small break-out rooms and other enclosed spaces and are to be at a height of eight feet to nine feet (offices at 8’6” and conference rooms 9’). In the small to medium size conference rooms a larger format acoustical panel ceiling is provided with an open-to-structure perimeter (in most conference rooms). The main large conference rooms that form the Conference Center utilize large format ACP panels in the center of each room surrounded by GWB soffits at the perimeter. The open office ceiling is an acoustical baffle ceiling system that is hung from a traditional 2 X 2 ceiling suspension grid. Lighting is placed between baffles and both lighting and the baffle ceiling suspension grid will be hung off of a unistrut system placed just above the ceiling system. To aid in sound absorption in the open office area a sound absorbing panel is shown to be adhered directly to the steel deck for 75% of the baffle ceiling area. The height of the baffle ceilings shown are to be at a height of 9’-6” on the first floor and 9’ or 9’-6” on the second floor. Utilitarian spaces are to receive a painted exposed structure ceiling.
6. Interior storefront with insulated glazing is being used to create new entry vestibule areas at both the north and south building entries.
7. Existing egress stairs- The existing stair treads/risers and landing are existing to remain. It was confirmed after the 70% submission that the guardrail of the egress stair does meet code, with the exception of the handrail height and handrail clearance from wall. The existing handrail dipped below 34” in some locations and the clearance between the handrail and the wall was below the 2 ¼" prescribed by NFPA 101. Therefore, the existing handrail of the guardrail and at the wall is shown being moved or replaced and mounted 36” above the treads/landing to meet current code in the 100% submission.

Other Architecture Work Resulting from Other Discipline Driven Tasks

Damage from penetrations and openings resulting from the work in walls, ceilings and floors are to be patch and repaired to match the adjacent surfaces. This will include patching the GWB furred walls at the exterior walls where electrical back boxes are removed.

Penetrations and openings resulting from the work, in fire-rated assemblies will be smoke and fire stopped as required.

Fire and Life Safety

Related to Fire and Life Safety, the following work will occur throughout the area of work:

- Penetrations and openings, existing or resulting from the work, in fire-rated assemblies will be smoke-stopped and fire-stopped as required.
- New spaces and shafts that require a fire rating will be provided with fire rated partitions.

Acoustical Considerations at the Lobby/Communicating Stair

The Lobby/Communicating Stair area has been further evaluated in relation to providing sound absorption and providing architectural elements that will control sound between the lobby and adjacent open office areas. The second floor is the primary area of concern for the sound control since the open office areas are directly adjacent to the lobby space. The first floor is more buffered from the lobby area since the Break Room seating is directly adjacent to the lobby on the east side (and the Break Room seating area is separated by a glazed partition from the adjacent open office area). On the first floor west side, the hoteling area is nearby but is separated to some degree by circulation space from the lobby to the conference center. The overall strategy is to provide as many sound absorbing surfaces in the lobby as possible at walls and ceilings. The following are the strategies to control sound from the lobby:

1. Sound absorbing wall panels – Sound absorbing panels have been added to wall areas in the lobby, primarily the south wall. Wood plank sound absorbing panels are placed on the outer walls of Conference Room 200 and on the sides and ceiling of the bridge on the second floor placed between the communicating stairs.
2. Sound absorbing ceiling and wall system - In addition to other sound absorbing wall panels, a seamless taped mineral fiber panel ceiling system that mimics a gypsum wall board ceiling comprises all of the suspended ceilings in the lobby. This same system also wraps up the vertical surfaces of the at the base of the skylight and integrates with the suspended ceiling area.
3. Full height glazing – On the west side of the second floor a full height all glass panel system is placed to allow light to filter from the skylight to open offices but also form a plane to block sound coming from the lobby. Although the open offices areas are fully open for a limited area to the lobby – reducing the size of this opening from the lobby to open office areas on both floors is a strategy to limit sound coming from the lobby.

Roof System Dew Point Analysis

A WUFI analysis of the roof system was performed. This analysis provides design information for the roofing material layers to avoid moisture developing and being trapped within the roof system due to dew point temperatures begin created by the insulation layering. The results and recommendations for the system are in the Appendix of this report. Based on the recommendations the fully adhered TPO system is designed without a vapor retarder.

Hazardous Material Abatement

The facility has no known hazardous materials, based upon information provided to Jacobs by the FAA. It is not anticipated that any hazmat abatement will be required for any project work.

Temporary Facilities

Temporary facilities are not anticipated to be required as part of the work.

Phasing

This project will not require phasing and identification of phased construction.

5. Interiors Description

The concept selected following the charrette report maintains the building's existing elevator and egress stairs, but other core elements are new including the building vestibule, lobby, structural slab, communicating stairs, and restrooms.

The communicating stair on either side of the main corridor creates a central gathering space and focal point. Built in seating along each stair creates a multipurpose area designed to function as an informal meeting space for staff to gather for casual discussions or individually during a break and in a larger setting for announcements with the ability to listen in from all sides of the central corridor.

Restrooms are conveniently located at the center of the building near the communicating stair and elevator. A mother's room is located on the first floor with access through the women's room for added privacy. The mother's room has millwork with a sink, an undercounter refrigerator, soft seating, and a side table. Break rooms are provided on each floor and are outfitted with millwork including a sink, built in space for (4) microwaves, storage, and (2) refrigerators. Vending machines are located on both the first and second floors.

Conference spaces are centrally located on each floor with the conference center comprised of one large dividable conference room with seating for 70 people, as well as conference overflow space with recessed seating and support millwork. Adjacent to the enclosed conference overflow space and off the main lobby is the dedicated hoteling area, providing space for 24 and one private office for executive hoteling. Locker storage is provided off the hoteling area in an otherwise unused niche.

Apart from the main corridor which connects the building north to south, circulation is simplified with conference rooms and private offices grouped together between the east and west egress stairs. This orientation creates large open office areas running the width of the building on the north and south side of the core, maximizing the available area for workstations, and lending itself to future reconfigurations. A variety of collaborative spaces have been incorporated to facilitate both scheduled and impromptu gatherings in semi-private and open office areas.

Open office areas are outfitted with staff and contractor workstations varying in size from 8'-0" x 8'-0" to 8'-0" x 6'-0". Workstations are arranged with shared spines perpendicular to the north and south exterior walls to maximize the number of workstations that can be accommodated within the open office area. Large meeting tables at varying heights, benches and side tables, and soft seating are placed throughout the plan.

Printer and copy areas are centrally located on both floors and provide millwork storage as well as power and data to support multifunction devices. Secure filing is provided on the second floor off the main corridor.

Comprehensive Interior Design (CID)
A Comprehensive Interior Design (CID) package is provided as part of the project deliverables. The CID package is comprised of two parts, the Structural Interior Design (SID), and Fixtures, Furniture and Equipment (FF&E). The SID Package includes interior building finishes for floors,

walls, ceilings, millwork, window coverings, and interior signage as described below. The FF&E Package includes furniture, fixtures, and equipment specific to the project and user requirements as described previously. The FF&E finishes will be coordinated with and complement the interior finishes to provide a cohesive and aesthetically pleasing interior environment.

The following is a description of new interior finishes by space:

- The main corridor is to receive poured terrazzo flooring and base throughout, paint and a combination of acoustical gypsum board ceiling, acoustical panel ceiling (APC) and acoustical wood planks.
- The communicating stairs are to receive terrazzo treads and risers, wood clad steps for seating, felt acoustical wall panels with paint above, and a glass handrail.
- Restrooms are to receive new porcelain floor and wall tile, with wall tile extending to the ceiling on wet walls and to 72” above the finished floor (AFF) on all other walls, new gypsum ceilings with moisture resistant paint, solid surface counters with 4” high backsplashes, full width mirror, and solid plastic floor-mounted, ceiling-braced toilet partitions. A decorative wall tile will also be incorporated.
- Open office areas, private offices, and conference rooms are to receive new carpet tile, rubber wall base, and paint. Conference rooms are to receive felt acoustical wall panels on feature or AV walls and glass marker boards. Conference rooms will receive large format APC, while private offices will receive 24”x24” APC, and open office areas will have a combination of painted exposed ceilings and acoustical ceiling baffles varying in size.
- A contrasting color carpet pattern will be included in the open office areas and office corridors to serve as a design element to assist the visually impaired by creating a pattern that can be followed throughout the administrative space circulation path.
- Break rooms are to receive Luxury Vinyl Tile (LVT) flooring with rubber wall base, paint, and APC. Millwork to be plastic laminate clad with solid surface counters and backsplash or extending from the counters to the underside of the upper cabinets.
- Utility rooms are to receive sealed concrete, rubber wall base, paint, and painted exposed ceilings. The janitor closet will receive FRP wall panels on wet walls with paint above.
- Windows are to receive manual roller shade window coverings to control daylight at workstations.
- Elevator to receive new floor, wall, and ceiling finishes.

6. Mechanical Engineering Description

6.1 Introduction

This section describes the proposed approach and basic operational strategy for the mechanical system. An efficient and cost-effective design solution must be provided for the Warrenton Administrative Building (DCCA ADM).

The design objective is to provide a building ventilation and cooling system that meets and/or exceeds energy, comfort, and performance.

The first and second floor occupied spaces will be heated and cooled by 4 double-wall, variable air volume packaged heat pump units. These Roof Top Units (RTU) will have direct expansion cooling coils with hot gas re-heat. The RTU's will have natural gas auxiliary heat. The RTU's will serve variable air volume boxes with electric re-heat coils. The RTU supply and exhaust fans will be internally isolated and balanced to minimize vibration transmission to the building. Variable-speed drives will vary the fans speed based on duct static pressure and building pressure.

The radon exhaust system will be demolished and replaced with a new plenum rated radon extraction system routed to the replacement exhaust fan (EF-3) located on the roof.

Balancing and testing of controls must be completed before the baffle system is installed.

6.2 Design Approach

All mechanical systems must be designed in accordance with applicable codes, NFPA requirements, industry standards and standard engineering practices. The mechanical design is based on the following factors:

- Performance factors that include efficiency, simplicity, durability, functionality, and acceptable levels of redundancy**.**
- Cost factors that include first costs, long−term operational costs, and maintenance costs.
- Approved calculation methodology to right size equipment to match project loads.

Energy efficient equipment must be selected with life−cycle costs in mind. Per UFC-1-200-02, High Performance and Sustainable Building Requirements, mechanical equipment that is ENERGY STAR® qualified or meets Federal Energy Management Program (FEMP)-designated efficiency requirements in all covered product categories must be pursued, where possible. System equipment selections and DDC systems must be designed to provide the required turndown range, functionality, system control and monitoring, and must maximize energy conservation within operational constraints.

6.3 Equipment Bracing

Seismic bracing must not be utilized for mechanical systems.

6.4 Noise Level Requirements

Noise levels must comply with the requirements in the latest edition of the ASHRAE Applications Handbook.

6.5 Fire Dampers, Fire Stopping and Acoustic Sealant

Fire stopping must be provided at fire-rated assembly pipe and conduit penetrations. Fire stopping and/or fire dampers must be provided at fire rated assembly duct penetrations.

Penetrations must be treated with acoustic sealant on both sides of the partition assembly as needed to meet STC ratings.

6.6 Antiterrorism/Force Protection Measures

All air openings in the building must be a minimum of 10 feet above finished grade to the bottom edge of the opening. Dampers used for outside air intakes must be low leakage type with 3 cubic feet per minute (cfm)/SF with a differential pressure of 1 IN WC across the damper.

6.7 Existing Systems

6.7.1 Mechanical Systems

Demolish all existing Mechanical Systems, vav boxes, ductwork, insulation, piping supports and controls.

6.7.2 Radon Exhaust System

Demolish existing Radon Exhaust system down to slab.

6.8 Outdoor Design Criteria

Outdoor design conditions are for Manassas Regional, VA. The ASHRAE WMO# 724036, as sourced from 2017 ASHRAE Handbook – Fundamentals.

Table; Design Conditions (ASHRAE Fundamentals Handbook 2017)

Parameter	Value
Location	Manassas Regional, VA WMO# 724036
Latitude	38.72N
Longitude	77.51W
Elevation	192 feet above sea level
Heating Degrees Days (HDD65)	4826
Cooling Degree Days (CDD50)	3612
Climate Zone	4A
Outside Design (Cooling 1.0%)	90.8°F DB/74.4°F mcwb
Outside Design (Heating 99.0%)	15.9°F DB/6.3% HR

Notes:
% = percent
F = Degrees Fahrenheit
DOAU = dedicated outside air unit
Mcdb = mean coincident dry bulb
mcwb = mean coincident wet bulb
gr/lb = grains of moisture per pound of dry air
HR = Humidity ratio

6.9 Indoor Design Criteria

Indoor design conditions must be established per UFC-3-410-01, paragraph 3-4.2.1, Spaces Conditioned for Comfort Cooling General area mechanical systems must be capable of heating,

cooling, dehumidification, or ventilation year-round unless otherwise indicated. Provide each zone with its own thermostatic range of control.

Provide thermostats and temperature sensors with occupant adjustment control of +/- 3 degrees F.

INDOOR DESIGN CRITERIA	
Area	**Temperature, Humidity**
General Occupied Areas (Office space, Conference Rooms, Restrooms, Etc…)	74°F Cooling, 72°F Heating 50% RH / 57.9°F dewpoint dehumidification control
Storage Areas	78°F Cooling, 68°F Heating 50% RH / 57.9°F dewpoint dehumidification control
Conditioned Server/Telecom Rooms	74°F Cooling 8-80% RH / 82°F max dew point
Ventilated Electrical/Mechanical Rooms	10°F Above Ambient 85°F Summer Ventilation, 68°F Heating Freeze Protection

6.10 Mechanical Piping and Ductwork Distribution Systems

Mechanical Refrigerant Piping: Refrigerant piping systems must be designed in accordance with UFC and the International Mechanical Code (IMC) 2018.

Refrigerant piping must be ASTM B280, Type ACR, hard drawn straight lengths, and soft annealed coils, seamless copper tubing. Tubing must be factory cleaned, ready for installation. All refrigerant joints must be brazed. Refrigerant piping must be insulated as specified with flexible elastomeric insulation with vapor barrier, and PVC jacket indoors and stucco embossed aluminum jacketing outdoors.

Mechanical Ductwork and Air Terminal Fixtures: Provide ductwork constructed, braced, reinforced, installed, supported, and sealed per the IMC and SMACNA standards. Install exhaust duct according to Seal Class A. Supply air diffusers must be located to not create drafts or turbulence at delivery into space.

Ductwork for general areas must be galvanized sheet metal, minimum G90. Air fixtures (diffuser / grilles / registers) must be steel with manufacturer’s standard baked enamel finish for general areas.

Ductwork must be insulated as specified with rigid formed mineral fiber insulation with vapor barrier and factory jacket. Additional jacketing is not required in general areas. Stainless steel jacketing is required in FFT areas. Aluminum jacketing is required in DCWT areas. All ductwork areas of high humidity must be aluminum construction for a distance of 5 feet from the ceiling air fixture for corrosion purposes. Alternative: Ductwork must be dual wall construction of the same materials with required R-value insulation sandwiched between.

Provide mineral fiber blanket wrap that meets the requirements of ASTM C1136, ASTM C1290, ASTM C1338, ASTM E84, UL 723, NFPA 90A, and NFPA 90B. Provide rigid mineral fiber that meets the requirements of ASTM C553, ASTM C612, ASTM C1136, ASTM 1393, ASTM E84, and UL 723.

Low Pressure Systems: Low-pressure ductwork (maximum 2,000 feet per minute [FPM]) must be design using equal friction static loss method. Low pressure duct systems must be constructed as defined by ASHRAE and SMACNA and designed efficiently as follows:

- Supply Outside Air ductwork sized at 0.07 IN WC/100' static pressure loss.
- Return Air ductwork sized at 0.06 IN WC/100' static pressure loss.
- General Exhaust Air ductwork sized at 0.07 IN WC/100' static pressure loss.

6.11 Mechanical Systems Comparison Energy Model Alternatives Summary

- **Alternative 1 (Proposed HVAC Systems):** Rooftop mounted air handler with auxiliary natural gas heat and direct expansion cooling. Variable Air Volume (VAV) with electric reheat.
- **Baseline Systems:** 2013 ASHRAE 90-, Appendix G System Type 5 for a nonresidential facility and 4 or 5 floors and <25,000 ft^2 or 5 floors or fewer and 25,000 ft^2 to 150,000 ft^2 . The system type is a packaged rooftop variable air volume with reheat. The cooling type is direct expansion with hot-water fossil fuel boiler for heating.

Mechanical Systems Comparison Analysis

Block loads and an energy analysis were performed for the three system alternatives and the ASHRAE baseline (simplified 90.1 App. G) with Trane Trace3D plus (version 3.20.18). The results are in the following table.

		NATURAL GAS UTILITY USAGE (THERMS/YEAR)	ELECTRIC UTILITY USAGE (KWH/YEAR)
Proposed Alternative 1	Packaged Roof Top Unit with VAV electric reheat	830	652,647
BASELINE PER ASHRAE 90.1	Packaged Roof Top VAV with reheat	181	809,281

* *Natural gas and electric utilities energy costs and water utilities costs are per EPACT analysis table.*

In accordance with ASHRAE 90.1, Item G3.1.2.3, *Unmet Loads* states "Unmet load hours for the proposed design or baseline building design to not exceed 300 (of the 8760 hours simulated)." Energy modeling for all alternatives exceed this requirement.

The formula for calculating the Performance Rating to exclude the Receptacle and Process Loads from both the Baseline Building and Proposed Building; the formula in G1.2 of ASHRAE 90.1 is replaced with the following:

- % Improvement = 100 x ((Baseline building consumption - Receptacle & process loads) - (Proposed building consumption - Receptacle & process loads)) / (Baseline building consumption - Receptacle and process loads)

The resulting EPACT energy savings over Baseline system are in the following table.

		EPACT ENERGY SAVINGS
Proposed Alternative 1	Packaged Roof Top Heat Pump with VAV electric reheat	30%

Mechanical Controls Description

The mechanical controls work identified for this facility includes the removing of the existing controls that are currently controlling and monitoring the Heating Ventilation Air Conditioning (HVAC) systems. The controls scope also includes a new Direct Digital Control (DDC) system to control and monitor the replacement equipment included in the scope of this project.

DDC System Description

The new DDC system will be a complete system provided with all necessary hardware, control devices, software, and operator laptop. The controls system will be a native BACnet open protocol system using the latest ASHRAE 135 as the communications protocol for communication between DDC hardware devices. The DDC system will provide full control of HVAC equipment operation, status, setpoint adjustment and supervisory functions such as scheduling, alarm, and trend-logging for the facility maintenance. As requested by FAA, the basis of design will be EcoStruxure Building Operation by Schneider Electric, Inc.

The primary DDC network, including network controllers and network hardware such as Building Controller (BC) and operator laptop, will communicate via the dedicated DDC network using Ethernet/IP network, BACnet over IP (BACnet/IP). The field controllers such as Advanced Application Controllers (AAC) and Application Specific Controllers (ASC), will be connected to the Building Controller and/or network hardware, and communicate via secondary DDCS networks using BACnet MS/TP.

The operator laptop will be provided with front-end DDC software, necessary tools/software, and network hardware. Front-end graphic display screens will be provided to display all points in the DDCS Point Function Schedule.

The Building Controller will communicate with field controllers and operator laptop, and provide supervisory functions such as schedules, alarm listings and trend-logging to the DDC system. AACs will be used to control major equipment such as air handling units. ASCs will be used to control terminal units such as Variable Air Volume (VAV) boxes.

Control of HVAC Systems

Each rooftop Air Handling Unit (AHU) will be provided with manufacturer BACnet compatible factory controls along with any necessary DDC interface modules to control and/or monitor as defined in desired sequences. The AHU fans will be provided with variable frequency drives to provide capacity control to optimize energy efficiency for AHU. The air handling unit will maintain control of supply air conditions and humidity and will deliver a variable supply air quantity in order to maintain a constant duct static pressure within the duct distribution system, controlled by the air handling unit's onboard controller. Exhaust fan will be enabled only as needed independently from supply fan and its speed must be controlled to maintain building pressure relative to the outside. Outside air to each rooftop unit will be individually controlled by an air measuring station located in the outside air intake ductwork. The air measuring station will be able to measure the outside air throughout the scheduled ranges. The AHU controller will communicate

with the associated VAV boxes for the condition of each zone and optimize the fan speed and heating/cooling set point for efficient operation. The unit controller will be placed in occupied or unoccupied mode based on command signal from DDC system according to a user definable time schedule.

VAV terminal units will be provided with Application Specific Controllers, sensors, and control devices. Each VAV terminal box will maintain supply air temperature within its space through monitoring of a space mounted temperature sensor, controlling supply air damper and electric coil. The space temperature sensor in each controlled zone will be provided with set point adjustment (limited range) and after-hour override. The occupant will be able to adjust the temperature set points at the room temperature sensor. The space temperature will be monitored by the DDC system and alarms will be generated if the respective system cannot maintain temperatures within the desired range.

Restroom exhaust fan, EF-1, will be monitored and controlled by DDC system and interlocked with associated AHU operation. Sequences will be written such that exhaust fan and air handling unit scheduling match. A current switch will be provided to monitor the status of the exhaust fan.

EF-2 will be controlled by the DDCS to maintain the space temperature at desired setpoint. A space temperature sensor will be provided in the Sprinkler Room and directly monitored by the DDCS. A current switch will be placed within the fan motor starter to monitor the status of the fan. Exhaust fan will be hardwire interlocked with associated exhaust air damper and outdoor motorized louver.

EF-3 will be start/stop/proofed through DDCS. When the exhaust fan is started by DDCS, the associated exhaust damper will be open through a hardwired interlock with exhaust fan.

Fan coil units will be controlled by unit manufacturer controllers located in the units, not through the DDC system. Each fan coil unit will be provided with a BACnet communication interface and connected to the DDC network.

Unit heaters will be controlled using local unit mounted thermostats. The DDCS will not be used to control this equipment

As part of this project, emergency shutdown switches will be provided in the building. Upon receipt of a status alarm indicating that the emergency shutdown switch has been activated, the DDC system will shut down the building's ventilation system to minimize spread of airborne contaminants within the building.

Commissioning/Training

The system will require commissioning to include the DDCS front end system, graphics interface, controllers/field devices, and HVAC equipment controllers/components. This will be coordinated with a complete systems' startup protocol that must occur prior to system commissioning efforts.

At the end of system installation, functional testing, and system commissioning, the Contractor will provide operations and system maintenance training to FAA personnel on all aspects of the newly installed system, including hardware and software.

Control System Design

The design will include schematic flow diagrams for the new HVAC equipment, which will show the location of all required sensors and control devices. A detailed DDCS Point Function Schedule will be provided to show how each sensor and control device on the flow diagram is to function within the DDC system. The design also includes written sequences of operation to describe in detail how the new HVAC equipment is to be controlled.

A control system specification will be provided to describe in detail the requirements for the control system. The specification will include product information on the controllers, sensors, network interface devices, and operator's workstation as well as other devices that are required for a functioning control system. The specification will also describe in detail the training that is to be provided by the controls contractor.

7. Plumbing Description

Plumbing Systems Renovation Overview

The existing two story facility originally designated as Athena Controls was constructed in 2006 and is located at 3271 Macintosh Drive, Warrenton, Virginia 20187. The building is approximately 43,000 square foot with a steel frame structure, masonry and cast panel exterior and in a suburban location. Existing restrooms, lounge kitchen and mechanical space plumbing systems, equipment and fixtures are original to the facility's initial 2006 construction date. At fifteen years, most plumbing equipment and fixtures are not at the end or past their ASHRAE expected useful lifespan. However, they must be replaced during this complete facility renovation due to high likelihood of fixtures' damage during removal, short remaining useful lifespan time period and to comply with current ASHRAE 90.1 and EPACT water and energy savings requirements. Plumbing scope identified for this project includes updating restrooms to current ABA standards, relocating them on the floor plates, configuring correct-sized plumbing chases which facilitate servicing and replacing plumbing fixtures. Plumbing service entrances, equipment and distribution piping systems are also to be replaced and/or relocated. The following is a summary listing; refer to drawings.

- Site Sanitary Waste Utility Connection Southwest Building Corner (Single 6" Sanitary Main to Existing Sewage Ejector Shared with Other Building)
- Storm Water Utility Connections Northwest and Southeast Building Corner (Two 10" Storm Water Utility Main to Site Utility Connection)
- Domestic Water Service Entrance Sprinkler Room 102 (2" Domestic Water Service Entrance with Double Check Valve Backflow Preventer)
- NG Service Entrance Southeast Corner of Building Exterior (2" / 2,600 MBH / 2.0 PSI Natural Gas Meter Service Entrance to Four Rooftop HVAC RTUs)
- Hot Water Heater in Janitor's Closet First Floor (Electric Domestic Hot Water Heater, Recirculating Pump – No Thermal Mixing Valve Master Station)
- Women's 119 and Men's 120 Restrooms (First Floor Gang Bathrooms, Adjacent Janitor's Closet)
- Women's 228 and Men's 223 Restrooms (Second Floor Gang Bathrooms with Showers, Adjacent Janitor's Closet)
- Kitchen P113 (First Floor Kitchen Sink and Dishwasher)
- Server M111 and Server M222 (1" HVAC Makeup Water Line with Double Check Valve Backflow Preventer to Computer Room Unit Humidifiers)

Existing Radon Mitigation System

It is assumed radon levels higher than EPA recommended maximum level of 4 pCi/L were encountered during the original 2006 design. This resulted in requirement for active soil depressurization radon mitigation system in accordance with EPA radon mitigation recommendations. A radon mitigation system original to the 2006 construction is existing to remain and consists of below slab perforated PVC pipe with powered exhaust fan(s). The existing perforated PVC piping is installed in a grid layout, at approximately 20 foot spacing, to gather radon from the soil and discharge safely outside the building envelope.

The perforated PVC piping is routed to common solid wall PVC pipe riser(s) that penetrate through the grade floor slab, route up thru the building and terminate at a safe discharge point above the roof finished level. The existing radon mitigation system PVC in slab piping and vent piping routed through the building is assumed to be in good condition and suitable for re-use.

First floor concrete slab cutting must be coordinated to prevent damage to the existing radon mitigation PVC pipe grid system. Where piping is encountered or damaged, it must be repaired by replacing any damaged pipe using quality materials and quality workmanship practices and procedures. Any vapor barriers that must be disturbed must be repaired by replacing any damaged barriers using quality materials and quality workmanship practices and procedures.

Existing radon exhaust fan(s) must be located outside the occupiable space in accordance with EPA requirements; fan(s) are currently located at the roof level and must be replaced in kind. Refer to mechanical.

Sanitary and Vent

Existing sanitary waste 6 inch main currently exits at southwest corner of the building between Columns E1/E2 and will be reused. Existing connection to a common sewage ejector pump station shared with another building will be removed, and a replacement connection made to sanitary sewer utility to the southwest of the building. Refer to Civil for outdoor routing 5 feet outside the building.

The total building drainage fixture units for the facility are 108 DFUs, which requires a single 4 inch sanitary site utility connection. However, the existing 6 inch sanitary lateral will be reused for ease of access for cleanout machinery, and to minimize cutting of concrete slab.

Associated sanitary waste piping and vent piping throughout the building will be replaced to reroute to relocated restrooms, showers, kitchenette sinks, janitor's closet(s), service entrance RPZ drain, etc. Sanitary piping located underneath first floor concrete slab that is to be demolished in place will be abandoned in place by completely filling with concrete/grout and capped with flush floor plate mechanically secured in place. First floor concrete slab cutting will be coordinated to prevent damage to existing radon mitigation PVC pipe grid system and coordinated for below slab structural elements.

A sanitary drainage system will be provided to serve all plumbing fixtures, drains, etc. The system will drain by gravity to the existing site sanitary sewer utility. Design of the sanitary vent system will be based on fixture unit load values as indicated by the IPC Plumbing Code.

Sanitary piping will be underneath the grade level concrete floor slab (dependent on routing inverts) or supported from upper floor decks. Sanitary pipe will slope back to the fixture it serves. Vent piping must be combined, where practical, inside the building and must terminate at vents through the roof.

Sanitary waste and vent piping systems will be minimum schedule 40 fire-rated PVC with solvent cements used for PVC pipe above grade and below grade. Adhesive primers will meet low VOC content per requirements; refer to Sustainability.

A minimum of one floor drain will be provided in every restroom, janitor's closet, and mechanical spaces. Drains will be provided at all pieces of equipment requiring drainage in mechanical rooms. A dedicated floor drain will be provided at the water service entrance RPZ backflow preventer(s).

SP-1: An automatic oil-sensing package sump with simplex pump will be provided for the elevator sump pit. This includes a factory configured package consisting of pump, sump, covers floats, wired and configured controls, level sensors/alarms, oil minder control - selected for 50 GPM at 20 FT WC with a 0.5 horsepower motor. Basis of Design will be Stancor Oil Minder Model SE-50 Simplex, with a 120V/1-Ph/7 Amp power connection.

Trap guards will be provided to all trapped floor and hub drains subject to seal loss by evaporation.

Storm Water Drainage

Two storm water mains exist connected to site storm utility and will be reused. One 10 inch main is located at the southeast corner of the building between Column E1/D1, and a second 10 inch main is located at the southwest corner of the building between Columns E8/D8. Renovation intent is to reuse existing site storm water utility connection. It is also intended to reuse existing PVC storm water piping underneath the first floor concrete slab, as well as the vertical PVC storm water leaders to the rooftop; there are a total of four 8 inch vertical rain leaders. Existing single roof drain plumbing fixtures will be replaced with single roof drains. Secondary storm drainage is served by existing scuppers to remain; refer to Architecture for more information on scuppers.

The system will continue to drain by gravity to the existing site storm sewer utility. Storm drain piping if replaced will be supported from top floor decks for connection to gutter drains, routed down thru building chases and below slab to a point 5 feet from the building exterior where Civil site utility will make final connection to the public stormwater system. Existing to remain storm drain piping will not be disturbed; utility connection of existing to remain storm drain piping will not be disturbed.

Storm drain piping if replaced will be minimum schedule 40 fire-rated PVC with solvent cements used for PVC pipe above grade. Adhesive primers will meet low VOC content requirements.

All storm drain piping inside the building and the roof drain bodies will be insulated as specified with cellular glass insulation with all-service jackets and PVC fitting covers. Storm drain piping and roof drain body insulation will be minimum 1-1/2 inch thick and provided with a vapor barrier coating.

Domestic Cold Water Booster Pump Not Required

The preliminary building domestic cold water fixture flow rate is approximated at 110 GPM for facility general potable water use.

Hydrant flow test has been provided which indicates a static pressure reading of 60.0 psi with a residual pressure reading of 55.0 psi at a flow rate of 885 GPM. Hydraulic flow graphing (see

following, https://www.anvil-fire.com/apps_log_graph.html) indicates high residual pressure with a flat curve out to higher flow rates.

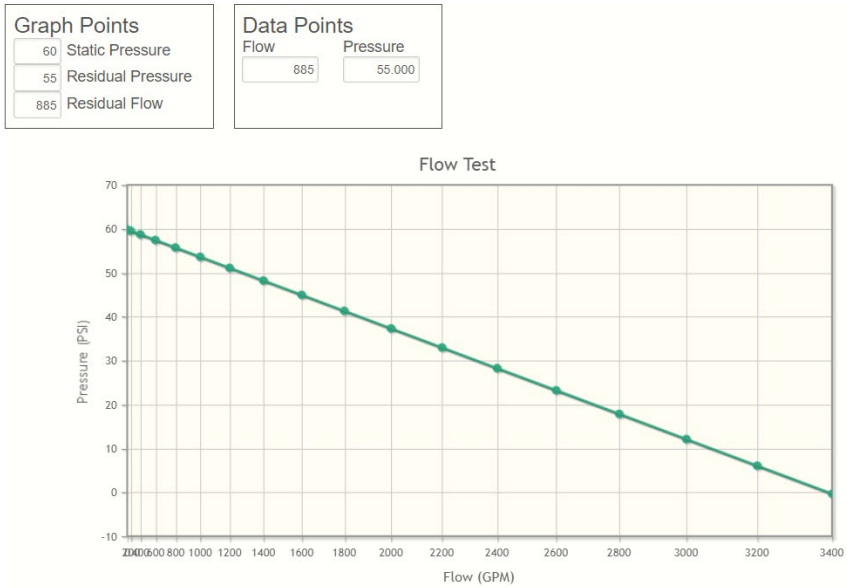

Per this information, a domestic water booster pump system is not anticipated to be required at the domestic water service entrance to the facility. Updated hydrant flow tests will be completed during the course of this project if the time period exceeds 6 months, and calculations will be completed to reconfirm adequate system pressure during design.

Domestic Water Service Entrance

Existing domestic water 2 inch service main located in the Sprinkler Room will be replaced, along with existing double check valve type backflow preventer. The existing domestic water service entrance is a branch pipe tap that occurs inside the Sprinkler Room off of the 8 inch common fire water/domestic water service main. Associated domestic cold water distribution piping throughout the building will be replaced to reroute to relocated restrooms, showers, kitchenette sinks, janitor's closet(s), - etc.

A water softener package system located in Sprinkler Room 102 with the 2 inch domestic cold water line routed into it and back out of the system to the building will be removed. A replacement water softener system is not required and will not be provided; electric water coolers will include filters to offset potential water hardness issues. Addition of a water softener system results in an approximately 15 PSI pressure loss; coupled with the water meter pressure loss of approximately 6 to 12 PSI. The available incoming 60 psi static pressure is not sufficient to distribute domestic cold water throughout the building, and a packaged water booster pump skid would be required.

Required back flow prevention for cross−connection control of non−potable water service will be provided as required per the IPC; this includes make−up water connections to HVAC systems. Water piping at building entry will have a manual shutoff valve. The utility meter is existing and currently located upstream of strainers and backflow preventers and will be replaced.

The preliminary building domestic cold water fixture flow per IPC rate is approximately 110.0 GPM with flush valve type water closets and requires a 3.0 inch domestic potable water service entrance to the facility and requires a reduced-pressure zone assembly (ASSE 1013) for backflow prevention protection located in existing first floor Sprinkler Room 102.

Note, if the intent is to maintain the existing 2.0 inch incoming water service entrance size and avoid reconnecting to the 8 inch water main inside the Sprinkler Room, tank type water closets must be utilized. The preliminary building domestic cold water fixture flow calcs utilizing flush tank fixtures per IPC rate would be approximately 75.0 GPM at 7.78 FPS. Note, tank type fixtures are not typically utilized in commercial applications, and they are not recommended for the following reasons. There is an increased potential for clogs, tank/bowl interface leaks, bowl wax ring seal leaks, float flush valve failures, having to clean behind the bowls, etc. In addition, the existing water meter is a 1.5 inch unit that is undersized even for the 75 GPM service consumption.

Note, the use of flush valve water closets and urinals to replace existing tank type water closets is the primary reason for service entrance size increase. Facility water service pressures must be provided during design to finalize the water service entrance and determine whether or not a domestic water booster pump system is required. Hydrant flow tests will be completed during the course of this project, and calculations will be completed to confirm adequate system pressure.

The existing utility meter located indoors with remote reading antenna outside will be replaced for the larger DCW service connection. A replacement water meter will be provided, owned, and billed by the utility company at the service entrance. Meter will be capable of recording water usage data and providing an output for that information. Meters will meet AMI criteria and will be connected to the facility BAS. Meter will be located inside building upstream of the backflow preventer with its own dedicated strainer on the inlet and will be capable of reporting data to utility company via dedicated antenna located just outside the same mechanical space.

Domestic potable cold water system will be provided to all domestic plumbing fixtures, hose bibs and wall hydrants located throughout the facility.

Domestic Water Distribution

Domestic cold water (DCW) and domestic hot water (DHW) will be routed above the ceilings in plenums; the domestic water will be distributed to supply all plumbing fixtures, hose bibbs, wall hydrants, water heaters, etc.

Below ground and in-slab domestic water will be distributed through type "K" soft drawn copper tubing, brazed joints only where continuous runs cannot be completed. Above ground domestic water will be distributed through type "L" ASTM B88 hard drawn copper tubing with soldered fittings. A transition will be provided between water service entrance copper pipe in the building and pipe coming in from the site utility. Refer to Civil for site utility water main materials used.

Water piping will be insulated as specified with cellular glass insulation with all-service jackets, polyvinyl chloride (PVC) fitting covers, and a vapor barrier coating to prevent condensation. Cold water piping will be insulated to prevent condensation, and hot water piping will be insulated to prevent heat loss. Insulation will be provided per IECC C403.11.3 based on pipe sizes and systems

indicated below:

- DCW piping 1-1/4-inch and smaller: 1/2-inch insulation
- DCW piping 1-1/2-inch and larger: 1-inch insulation
- DHW piping 1-1/4-inch and smaller: 1-inch insulation
- DHW piping 1-1/2-inch and larger: 1-1/2-inch insulation

Water piping will be sized to limit velocity to 8 feet per second in order to reduce pressure drop, noise and water hammer.
Isolation valves will be provided at accessible locations on all branch lines. These branches will be provided for each group of plumbing fixtures, remote fixtures, each piece of equipment, or area requiring water service. Isolation valves 1 inch and smaller will be two-piece, full port ball valves. Isolation valves greater than 1 1/4 inch will be three-piece, full port ball valves.

Water hammer arrestors will be provided on piping serving quick-closing valves at fixtures.

Access doors or removable panels will be provided at all plumbing fixtures, fittings, and system components in concealed locations.

DCW and DHW distribution systems will be disinfected and sterilized at completion in accordance with the AWWA standards.

Domestic Hot Water System

The existing domestic hot water heater in the first floor janitor closet is an 80 gallon electric storage tank type with a circulating pump; storage tank heater and circulating pump will be replaced with a high efficiency electric type storage tank unit with circulating pump and a master thermal mixing valve station. Associated domestic hot water distribution piping throughout the building will be replaced to reroute to relocated restrooms, showers, kitchenette sinks, janitor's closet(s), etc.

The DHW system will be designed to provide 140°F water which will be mixed with domestic cold water to provide adequate flow of 110°F water distributed to all users located throughout the facility. The system will include a domestic hot water system recirculation loop pumped to maintain delivery temperature at all fixture locations.

Design of the domestic hot water system size will be based on fixture unit load values as indicated by the IPC. The preliminary building hot water requirement is approximated at 40.0 GPH with a total storage capacity requirement of 80 gallons. The heater selection will incorporate a high recovery rate to offset the storage requirement; this minimizes equipment footprint and reduces standby heating loss associated with larger water volume.

- DHWH-1, TMV-1: One electric tank storage type commercial domestic hot water heater will provide 110°F hot water to plumbing fixtures with hot water supply connection. The ASME-rated water heater will have 80.0 gallon capacity stored at 140°F, with 9.0 KW total input, 36.0 GPH recovery rate (at 100°F temperature rise), and a master thermal mixing valve. The water heater will utilize dual heating elements, high/low configuration,

4.5 KW each and capable of simultaneous operation. The water heater will require a 480V/1PH/18.75 Amps power connection. Basis of design will be AO Smith Dura-Power commercial water heater, Model DEN-80.

- ET-1: One domestic hot water expansion tank, ET, will be provided to prevent damage to the hot water heater. The tank will be bladder-type and will be ASME compliant; the basis of design unit is Amtrol #ST-12C.

- DCP-1: The domestic hot water system will utilize a hot water return system consisting of one lead-free bronze inline circulation pump, DCP, with premium efficiency ECM motor and integral pressure sensing and speed control. The pump will be located near the domestic hot water heater in the janitor closet. The pump will be controlled by a line-voltage aquastats located in the hot water return lines to circulate hot water to maintain the loop temperature at 110°F. Each domestic hot water circulator will be provided with a 115V/1PH/1.3 Amps power connection. Basis of design will be Bell & Gossett Model ecocircXL 20-35.

The domestic hot water return piping loop will be a ¾ inch and will be insulated as specified with 1 inch thick cellular glass insulation with factory kraft paper jacket and PVC for fitting covers. Exposed piping will be provided with PVC jacketing.

Plumbing Fixtures

All first and second floor restrooms and janitor's closet(s) will be demolished, and replacement restrooms and janitor's closet(s) will be created. Route replacement plumbing systems to water closets, urinals, lavatories, sinks, showers, mop sinks etc. provided in relocated spaces. Refer to architecture.

Plumbing domestic cold water, domestic hot water, and sanitary waste/vent piping to Kitchen P113 first floor kitchen sink and dishwasher will be demolished. Route replacement plumbing systems to relocated kitchenette sinks, and/or dishwasher. Refer to architecture.

Existing domestic water makeup backflow preventers serving HVAC equipment will be demolished.

For plumbing systems renovation, provide replacement plumbing fixtures and trim with the WaterSense label and FEMP designation conforming to the requirements of the International Plumbing Code and compliant with ABA will be specified as a minimum. Additional water conservation measures – such as low flush volume toilets – will be applied with a goal to achieve facility water consumption below ASHRAE 90.1 requirements in accordance with Energy Policy Act 2005 Water Sense guidelines.

Plumbing fixtures will be commercial grade or industrial grade as appropriate. ABA-compliant fixtures will be provided where required. All plumbing fixtures will be provided with individual shutoff/isolation valves.

All piping systems, valves and equipment will have identification, in accordance with FAA standards as well as ANSI AND OSHA standards. Water conservation strategies will be used by providing efficient low flow fixtures with sensor faucets.

- Water Closets: Wall-mounted, vitreous china fixtures with siphon jet bowl and water saving 1.28 gallons per flush, battery-powered sensor flush valves and white plastic open-front seats, ABA compliant where required. The wall-mounted water closets will be supported by floor-mounted adjustable closet carriers with maximum 500-pound static load per ASME A112.6.1M.
- Urinal: Wall mounted, ABA compliant where required, vitreous china fixtures with water saving, 0.125 gallons per flush, battery-powered sensor operated flush valves.
- Lavatories: Counter mounted ABA-compliant vitreous china fixtures with battery-powered sensor faucets and grid drains, low flow 0.5 GPM. Provide with ASSE 1070 thermostatic mixing valve set to 105°F.
- Kitchenette Sinks: ABA-Compliant counter mounted stainless steel sinks with pull-out spray lever handle, 1.5 gallons per minute aerator. Provide with garbage disposal outlet.
- Mother's Room Sinks: ABA-Compliant counter-mounted, stainless steel sink with single handle faucet and 1.5 gallons per minute aerator. Provide with ASSE 1070 thermostatic mixing valve set to 105°F.
- Electric Water Coolers: Provide high-low type, ABA-compliant, self-contained electric water coolers with stainless steel finish, water bottle fill station and 8 gallons per hour chiller and filter included
- Hose Bibs: The interior hose bibbs will be vandal-proof type, bronze, or brass with replaceable hexagonal disc, 3/4-inch hose thread spout and equipped with anti-siphon devices (integral or as attachment) in conformance with ANSI/ASSE 1011.
- Non-freeze Hose Bibs: Exterior wall hydrants will be non-freeze, exposed, anti-siphon self-draining type with integral bronze casing, polished bronze wall plate, 3/4-inch hose thread spout and removable key. Provide additional shutoff valve inside building for each wall hydrant. Exterior hydrants will be spaced at maximum 150 feet intervals along the perimeter of the building.
- Roof Hydrant: Roof hydrant will be non-freeze, exposed, anti-siphon self-draining type with integral dual check backflow preventer. Roof hydrant will be ASSE 1052 listed. Provide additional shutoff valve inside building for roof hydrant.
- Mop Sinks: Floor-mounted, 36 inch by 36 inch, precast terrazzo, wall protecting splash guard and wall-mounted faucet with hose, 2.2 GPM.
- Roof Drains: 15-inch diameter roof drain, dura-coated cast iron bodies with combination membrane flashing clamp/gravel guards, double top-set deck plate, and low silhouette cast iron dome.
- Floor Drains: Two-piece body with adjustable strainers, with weepholes and invertible collar will be provided in mechanical rooms and restrooms. Cast iron with nickel plated or brass tops in finished areas, and coated cast iron tops in mechanical spaces. Floor drains will be provided with deep seal traps; trap primers will be added for drains subject to seal loss due to evaporation.
- Clean Outs: Cleanouts will feature cast iron body with round top and tapered thread bronze plug.

- Thermostatic Water-Mixing Valves: ASSE 1017, manually adjustable, thermostatic water-mixing valve with bronze body with checkstop and union on hot-water and cold-water supply inlets, adjustable temperature setting, and capacity at pressure loss as indicated. Provides with stainless steel cabinet with hinged door configured for recessed mounting.
- Water-Tempering Valves: ASSE 1070, manually-adjustable, thermostatically-controlled water-tempering valve, bronze body, and adjustable temperature setting.
- Reduced-Pressure-Principle Backflow Preventer (RPZ): ASSE 1013 RPZ consisting of ball valves on inlet and outlet and strainer on inlet, with test cocks and pressure-differential relief valve having ASME A112.1.2 air-gap fitting located between two (2) positive-seating check valves for continuous pressure application. Maximum 12 per square inch gauge (PSIG) pressure loss through middle one third of flow range.
- Trap Guards: Drains will be equipped with ASSE 1072, barrier type trap seal protection device that utilizes a normally closed seal to prevent evaporation of the trap seal and protect against sewer gases from backing up into habitable areas. Device opens with fluid and allows liquid drainage to flow through into the building drain.

Natural Gas Service

An existing 2 inch natural gas service main is located at the southeast corner of the building outdoors between Columns E1/D1. The existing service sized for 2,600 MBH at 2.0 PSI with meter serves four existing HVAC packaged rooftop units (RTUs) and a backup power generator located outdoors. Natural gas piping routed up thru the building will be relocated so that it is against the wall in a chase; current routing locates it so that it is coming up through the floor in an open office area. Natural gas piping routed across the rooftop is flexible pipe and will be replaced.

The anticipated NG load is approximated at 5,211 MBH; at 2.0 psi delivery pressure at the building gas meter/regulator, a 2.5-inch natural gas line after the meter is required for the facility. A preliminary allowance of 350 feet longest run has been approximated to establish service size at 2.0 psi in accordance with IFGC Table 402.5(2); service will be finalized during design. Coordination will be required with the local gas utility to provide a new gas meter capable of the new gas load, or to verify the existing gas meter is capable of the new load.

Above grade natural gas piping will be schedule 40 seamless black steel with malleable iron threaded fittings for pipe sizes less than or equal to 2 inch and welded joints for piping 2-1/2 inch or larger. Piping will comply with ASTM A 53, Grade B, threaded fitting will be Class 150 and comply to ASME B16.3, and welded fittings will comply to ASME B 16.9.

Below ground natural gas piping will be high-density polyethylene with heat-fusion joints. An anodeless meter riser will be provided at the transition from below to above grade for natural gas piping.

Refer to Civil for outdoor routing 5 feet outside the building.

Existing Compressed Air Equipment

Two existing Sullair PDC air compressors and an approximately 80 gallon vertical air receiver tank are located in Sprinkler Room 102. The two compressors and the tank will be removed and turned over to FAA for repurposing or disposal. Existing compressed air distribution piping system(s) will be removed; power connection conduits and wiring will be removed back to breaker at source power panel.

Electrical Engineering Description

The electrical work for this project includes the replacement of the majority of the electrical panelboards, lighting fixtures, and the modification of the existing grounding and lightning protection systems in order to meet current NEC and FAA Orders and Standards.

All electrical work shall be performed in accordance with the National Electrical Code (NEC), as well as the FAA Orders, Standards, and Specifications.

Power Distribution Equipment

The power distribution system will be configured in a radial topology consisting of the following elements:

- Commercial Utility Service
- Standby power generation
- Essential power distribution
- Fire life safety
- Electronic security systems

Commercial Electric Utility

The existing commercial utility service entrance will remain intact. The commercial electric utility system owner is Northern Virginia Electric Cooperative (NOVEC) requirements. The incoming voltage classification is rated 480Y/277 volt, 3-phase, 4-wire, 60 Hz. A NOVEC owned and operated pad-mount transformer is located at the exterior of the facility.

Interior Power Distribution

The building's main electrical distribution equipment room will be renovated to accommodate the new power distribution system's configuration. The power distribution system will be renovated to provide essential power to support building power loads. The existing exterior generator set's load capacity will be upgraded to accommodate new essential power loads.

Branch panelboards will be located throughout the facility where required to support branch circuit load requirements.

Interior Wiring Methods

Interior branch circuits and feeders will be installed in electrical metallic tubing (EMT). Rigid Galvanized Steel conduit (RGS) will be used in areas exposed to damage and weather. Connections to motors, transformers, and other equipment subject to vibration will be made with flexible metal conduit, liquid-tight for wet or outdoor terminations.

Indoor feeders and branch circuits will be sized based on copper conductors with a 75° C maximum operating temperature. Conduits will be sized assuming THHN/THWN copper conductors in the appropriate conduit type for the application.

Branch circuits will be sized not to exceed 3% voltage drop from the branch circuit panelboard to the last device on the circuit. This will allow an additional 2% voltage drop to occur in the distribution system and still comply with the NEC maximum 5% voltage drop.

Interior Lighting

Design will be based upon the guidance provided in ATOT's, A&E Project Manual, Guiding Principles for Sustainable Federal Buildings and Associated Instructions.

The lighting system design intent is to provide a highly efficient, functional, and aesthetically pleasing system to compliment the form and function of the area. To that end, light emitting diode (LED) based fixtures with electronic drivers will be used. Type LED fixtures will be installed in the renovated restrooms throughout.

A circadian lighting control system will be used to adjust LED fixture output based on the amount of sunlight in the room at a given time. Automatic lighting controls will be provided in the renovated area per ASHRAE/IESNA Standard 90.1 2016 requirements unless the lighting system is serving an area that must be continuously lit or unless directed by the FAA. Dual technology (combination infrared and ultrasonic) occupancy and vacancy sensors will be provided to automatically turn off the lighting in the space where required by 90.1 criteria.

Emergency egress lighting will be designed in accordance with the applicable Life Safety Code. Selected lights will be fed from existing central battery system to operate as emergency light during power failure and on at all times to match the existing control scheme. Fixtures will be located to provide an average of 1 fc (10.8 lux) area illumination, but not less than 0.1 fc (1.1 lux), along the egress pathways.

Lighting illumination levels will be designed in accordance with IESNA recommendations for interior lighting as stated in the Lighting Handbook, 10th Edition.

Grounding and Bonding Subsystems

A grounding and bonding distribution system will be installed for power distribution and telecommunication systems in accordance the NEC and ANSI/TIA-607-B requirements.

Facility grounding and bonding subsystems include following elements:

- Exterior earth electrode system (EES)
- NEC required power distribution grounding and bonding
- Telecommunication system signal reference structure (SRS)
- Surge protective devices
- Lightning protection system

The earth electrode system will be constructed at building exterior. The system will consist of driven ground rods interconnected with a loop counterpoise conductor. The facility main grounding connections and lightning protection down conductors will be connected to the EES. Exterior metal systems and building structural steel will be bonded to the EES.

Grounding and bonding for power distribution systems will comply with NEC article 250.
The facility signal reference system for communication equipment will be constructed in accordance with the NEC and ANSI/TIA-607-B standards for cost savings in lieu of full compliance with FAA-Std-019f. The system configuration will follow guidance provided in FAA-Std-019f to ensure system resiliency. The SRS will include a multipoint cable and ground plate distribution system for telecommunication electronic equipment areas. The SRS includes following parts:

- Facility main ground connections to the EES
- Multipoint ground plates located in telecommunication equipment rooms
- Multipoint cable and ground plate distribution system
- Common bonding connection for cable tray distribution systems

Surge Protective Devices

Surge protective devices will be installed at power distribution points in accordance with FAA-Std-019f and NFPA 780 requirements. Provide surge protective devices at following locations:

- Commercial utility service entrance equipment
- Distribution panel located at the load side of the facility standby generator set transfer switch.
- Essential panelboards that supply exterior power loads

Lightning Protection System (LPS)

A lightning protection system will be installed in accordance with FAA-Std-019f and NFPA 780 requirements. The system will include class-II rated components for compliance with FAA standards. The LPS will be installed on the building exterior. The existing building does not currently have an LPS installed.

Electricity Metering Equipment

The facility electrical service entrance equipment will include power metering in accordance with the electric utility's (NOVEC) requirements.

8. Communication Description

The Communication work for this project includes the replacement of the majority of the communication equipment including cabinets, patch panels, cable trays, outlets in demolished walls, cabling, telecom grounding, paging system and the modification of the existing fiber optic and copper cable entrance cabling and equipment in order to meet current TIA, NEC and FAA Orders and Standards.

All communication work shall be performed in accordance with the Telecommunication Industry Association (TIA), National Electrical Code (NEC), as well as the FAA Orders, Standards, and Specifications.

Demolition
The incoming service (conduit, cabling, fiber panel and protection blocks) from the existing com handhole on the site to the shared Telecom/Elec Room within the building is to remain.

All interior exposed equipment racks, cable trays, conduits, cabling will be removed back to its source. All conduits and boxes in non-demolition walls will be abandoned, cut, and capped.

Communication Service Entrance System
The incoming service (conduit, cabling, fiber panel and protection blocks) from the existing com handhole on the site to the shared Telecom/Elec Room within the building is to remain.

The FAA will work with their service providers for any required changes.

Building Spaces
Telecommunication Rooms (TR) will be provided on each floor per TIA-569-E and user requirements to serve office workstations, Conference Rooms and Utilities. The LAN/IT Room 223 will be provided on the second level per TIA-569-E and user requirements. The room will house the facility's server equipment and server office workstations, Conference Rooms and Utility spaces. Telecom spaces will be located to limit communication cable to a maximum of 295 feet. The room will be provided with but not limited to the following equipment,

A group of 3/4-inch thick, AC grade fire rated plywood backboards, painted with two coats of fire-retardant paint to match the wall finish, will be rigidly installed on three (3) walls to support mounting of equipment.

The room will be free of water or drainpipes not directly required in support of room equipment. The HVAC system in the room will provide 24 hour-per-day, 365 days-per-year operation. Temperature and humidity will be controlled to provide continuous operation. HVAC operation will be monitored by the control system.

A minimum of 46 Foot Candles lighting measured 3.28 feet above the finished floor will be provided per Telecommunications Distribution Methods Manual (TDMM) 14th Edition. Luminaires will be mounted a minimum of 8 feet 6 inches above the finished floor. Emergency lighting will be provided.

The Communication Rooms will include but not limited to the following,

- In LAN/IT room, 24" x 36" enclosed equipment cabinets with vertical and horizontal wire management for mounting FAA furnished and installed servers, backbone fiber optic cables to all TRs and termination patch panels.
- Two (2) Two Post Racks with Vertical and Horizontal Wire Management for mounting termination panels and equipment in TRs and LAN/IT rooms.
- Rack mounted 2U fiber patch panels equipped with LC adaptor panels for termination of fiber backbone cabling.
- Rack mounted 2U copper patch panels with CAT 6 RJ45 jacks for termination of backbone voice cables plus 25 percent spare.
- Rack mounted copper patch panels with RJ45 jacks for termination of horizontal Voice and Data cabling.
- Rack mounted Public Address (PA) System Amplifier.
- Secondary Bonding Busbar (SBB)
- Rack Bonding Bar (RBB).
- Wall Mounted Security Wireway and Owner Furnished, Owner Installed (OFOI) Electronic Security System (ESS) Enclosure and equipment.
- Rack mounted Voice/data switches (OFOI).
- Dedicated Electrical Panel.

Building Pathways

Ladder rack type cable trays (18-inch wide) will be provided over the equipment racks and a minimum of one wall in each Telecom Room.

Basket type cable trays (12-inch wide by 4-inch-high minimum) will be provided along the main cable pathways of the facility. The tray will be located above lift-out ceilings and where there are no ceilings, the tray will be run exposed. Where main cable pathways must pass through finished ceiling areas that are inaccessible conduits will be used in lieu of cable tray.

Between the cable tray and the outlet location, the horizontal cable drops will be installed in 1-inch conduit. Cable drops to systems office furniture will be installed in 2-inch conduit and will be transitioned from the cable tray to the internal cable raceways in the systems furniture via conduit drops to wall mounted deep backbox box and 2-inch flexible conduit to the furniture.

Building Cable Plant

Building backbone cabling will consist of a minimum of 24 single-mode fiber optic cable and 50 pair copper cable between existing Telecom/Elec room and LAN/IT Room. Between the LAN/IT room and Telecom Rooms backbone cabling will consist of a minimum of 24 single-mode fiber optic cable and 25 pair copper cable.

Horizontal Cabling will be CAT 6, 4 pair 23 AWG plenum rates cables with CAT 6 jacks for Voice and Data outlets. Horizontal Cabling will be CAT 6A cables with CAT 6A jacks for Wireless Access Point outlets. Color coding of cables and jacks must follow FAA standards as follows,

- Voice = Blue cable, White jack
- DATA = Blue cable and jack

- OPS = Green cable and jack
- WAP = Blue cable and jack

Combination Voice and Data (V/D) outlets will consist of three (3) RJ-45 jacks or four (4) RJ-45 jacks in a common faceplate designated with two jacks as "FAA" (Admin) and one jack as "OPS' (Operational). Faceplates equipped with four (4) jacks will designate two (2) as "FAA" and two (2) as OPS.

Voice only (Wall phone outlets) will consist of a stainless-steel faceplate equipped with mounting studs for a wall phone and equipped with one RJ-45 jack.

Data only (DO) outlets will consist of RJ-45 jacks configurations consisting of either one, two, or four jacks (labeled as "FAA" and "OPS") mounted on a common wall plate box.

In enclosed offices and open office areas, combination Voice and Data (V/D) outlets will be provided as necessary to serve the workstations, with no less than two (2) combination V/D outlets being provided per office.

Networked printer-copier-fax machine locations and network printer locations will be provided combination V/D outlets as required.

In Conference rooms, 4-port voice/data outlets will be provided on walls and in a combination power/com/AV floor box under the Conference Room table.

A minimum of one combination V/D outlet and one wall telephone outlet will be provided in the lobbies.

Data outlets with two (2) CAT 6A Jacks will be provided every 3600 SF in the building for installation of wireless access points.

A wall telephone outlet and one V/D outlet will be provided adjacent to the doorway inside Break Rooms, Electrical, Mechanical and Telecom Rooms.

<u>Grounding and Bonding System</u>
A complete Commercial Building Grounding (Earthing) Bonding Requirements for Telecommunications system will be provided per TIA–607-D standard to include the following provisions:

A Primary Bus Bar (PBB) will be provided in the second level LAN/IT room. The PBB will be connected to the main electrical system distribution panel grounding busbar in existing Elec/Telecom Room 132 with a Telecommunication Bonding Conductor (TBC) installed in conduit based on TIA-607-D, Table 1.

A Secondary Bus Bar (SBB) will be provided in the Telecom Rooms. The SBB will be connected to the PBB with an insulated Telecommunication Bonding Backbone (TBB) cable based on TIA-607-D, Table 1, terminated with exothermic weld on both ends.

An RBB will be mounted on each rack and connected to the Telecommunication Equipment Bonding Conductor (TEBC).

Insulated Telecommunication Equipment Bonding Conductor (TEBC) with 'H' tapped insulated TBB will be provided from the PBB/SBB to equipment racks RBB, to the closest building steel, to the copper cable building entrance terminals (BET), and to the cable tray pathway system.

Insulated Alternating Current Equipment Conductor (ACEG) will be provided from the PBB/SBB to local power panel.

Cable Antenna Television (CATV) System
CATV signal splitters, RG-6 coaxial cable drops and CATV outlets will be provided for distribution of the CATV signal in the building. Each TV outlet will have a coax and a CAT 6 outlet. TV outlets will be provided in the Conference Rooms and Break Rooms.

Provide RG-11 coax cabling between Telecom/Elec Room and LAN Room and splitters in Telecom Rooms.

Public Address System (PA)
The rack mounted PA amplifier, zone paging modules, telephone interface device will be located in the LAN/IT room and PA amplifier in Telecom Room (TR) 143 and connect to ceiling and wall mounted speakers throughout facility interior main corridors, classrooms, open offices, electrical, mechanical, communications, Break Room, men's, and women's restrooms to be heard in the main building pathway areas.

Audio-Visual (AV) System
Conduits, backboxes and power will be provided for FAA provided Audio-Visual systems equipment (projection equipment, sound reinforcement speakers, control equipment, etc.) in the Conference Room, Classroom, and other designated locations.

AV outlets consisting of conduits and backboxes at Monitor locations and credenzas will be provided to support cabling and devices in each room.

The following rooms will be designed with the following Owner Furnished, Owner Installed (OFOI) A/V equipment,

CONFERENCE ROOMS 144, 153, 154
• ONE (1) 120-INCH 4K WALL MOUNTED LED DISPLAY
• ONE (1) TILT-STYLE MONITOR WALL MOUNT
• FOUR (4) RECESSED 70-VOLT CEILING MOUNTED LOUDSPEAKERS
• ONE (1) A/V ALL-IN-ONE MATRIX 4K VIDEO SWITCHER INCLUSIVE OF CONTROL SYSTEM PROCESSOR
• ONE (1) HdBaseT STYLE 4K SCALING DISPLAY RECEIVER
• ONE (1) HdBaseT STYLE 4K VIDEO TRANSMITTER
• ONE (1) AUDIO DSP PROCESSOR WITH AEC AND AVB CAPABILITY
• TWO (2) FLIP TOP STYLE CABLE CUBBY, INTEGRATED INTO CONFERENCE TABLE PROVIDING HDMI, POWER AND DATA
• TWO (2) CEILING MOUNTED MULTI-ELEMENT VTC MICROPHONES

• ONE (1) PTZ 4K VIDEO CONFERENCE CAMERA
• ONE (1) PTZ VIDEO CONFERENCE CODEC PROVIDING LOCAL AND FAR SIDE SUPPORT
• ONE (1) 10-INCH CONTROL SYSTEM TOUCH PANEL TO MANAGE ROOM
• ONE (1) WIRELESS KEYBOARD AND MOUSE
• VoIP CONFERENCE PHONE WITH SPEAKER EXTENDERS
• A/V CREDENZA TO HOUSE PC, WIRELESS KEYBOARD, MOUSE, AND A/V EQUIPMENT

CONFERENCE ROOMS 151, 152 WITH DIVIDABLE PARTITION THAT WILL ALLOW THE CONFERENCE ROOMS TO FUNCTION INDEPENDENTLY OR AS ONE ROOM
• TWO (2) 120-INCH 4K WALL MOUNTED LED DISPLAY IN EACH ROOM
• TWO (2) TILT-STYLE MONITOR WALL MOUNT
• SEVEN (7) RECESSED 70-VOLT CEILING MOUNTED LOUDSPEAKERS
• ONE (1) A/V ALL-IN-ONE MATRIX 4K VIDEO SWITCHER INCLUSIVE OF CONTROL SYSTEM PROCESSOR
• TWO (2) HdBaseT STYLE 4K SCALING DISPLAY RECEIVER
• TWO (2) HdBaseT STYLE 4K VIDEO TRANSMITTER
• ONE (1) AUDIO DSP PROCESSOR WITH AEC AND AVB CAPABILITY
• TWO (2) FLIP TOP STYLE CABLE CUBBY, INTEGRATED INTO CONFERENCE TABLE PROVIDING HDMI, POWER AND DATA
• FOUR (4) CEILING MOUNTED MULTI-ELEMENT VTC MICROPHONES
• ONE (1) PTZ 4K VIDEO CONFERENCE CAMERA
• ONE (1) PTZ VIDEO CONFERENCE CODEC PROVIDING LOCAL AND FAR SIDE SUPPORT
• ONE (1) 10-INCH CONTROL SYSTEM TOUCH PANEL TO MANAGE ROOM
• ONE (1) WIRELESS KEYBOARD AND MOUSE
• VoIP CONFERENCE PHONE WITH SPEAKER EXTENDERS
• A/V CREDENZA TO HOUSE PC, WIRELESS KEYBOARD AND MOUSE
• A/V EQUIPMENT RACK TO HOUSE A/V EQUIPMENT (CLOSET 152A)

CONFERENCE ROOM 203
• ONE (1) 120-INCH 4K WALL MOUNTED LED DISPLAY
• ONE (1) TILT-STYLE MONITOR WALL MOUNT
• SIX (6) RECESSED 70-VOLT CEILING MOUNTED LOUDSPEAKERS
• ONE (1) A/V ALL-IN-ONE MATRIX 4K VIDEO SWITCHER INCLUSIVE OF CONTROL SYSTEM PROCESSOR
• ONE (1) HdBaseT STYLE 4K SCALING DISPLAY RECEIVER
• ONE (1) HdBaseT STYLE 4K VIDEO TRANSMITTER
• ONE (1) AUDIO DSP PROCESSOR WITH AEC AND AVB CAPABILITY
• TWO (2) FLIP TOP STYLE CABLE CUBBY, INTEGRATED INTO CONFERENCE TABLE PROVIDING HDMI, POWER AND DATA
• TWO (2) CEILING MOUNTED MULTI-ELEMENT VTC MICROPHONES
• ONE (1) PTZ 4K VIDEO CONFERENCE CAMERA
• ONE (1) PTZ VIDEO CONFERENCE CODEC PROVIDING LOCAL AND FAR SIDE SUPPORT
• ONE (1) 10-INCH CONTROL SYSTEM TOUCH PANEL TO MANAGE ROOM
• ONE (1) WIRELESS KEYBOARD AND MOUSE
• VoIP CONFERENCE PHONE WITH SPEAKER EXTENDERS
• A/V CREDENZA TO HOUSE PC, WIRELESS KEYBOARD, MOUSE, AND A/V EQUIPMENT

CONFERENCE ROOM 200
• TWO (2) 120-INCH 4K WALL MOUNTED LED DISPLAY IN EACH ROOM
• TWO (2) TILT-STYLE MONITOR WALL MOUNT
• SIX (6) RECESSED 70-VOLT CEILING MOUNTED LOUDSPEAKERS

• ONE (1) A/V ALL-IN-ONE MATRIX 4K VIDEO SWITCHER INCLUSIVE OF CONTROL SYSTEM PROCESSOR
• TWO (2) HdBaseT STYLE 4K SCALING DISPLAY RECEIVER
• TWO (2) HdBaseT STYLE 4K VIDEO TRANSMITTER
• ONE (1) AUDIO DSP PROCESSOR WITH AEC AND AVB CAPABILITY
• TWO (2) FLIP TOP STYLE CABLE CUBBY, INTEGRATED INTO CONFERENCE TABLE PROVIDING HDMI, POWER AND DATA
• THREE (3) CEILING MOUNTED MULTI-ELEMENT VTC MICROPHONES
• ONE (1) PTZ 4K VIDEO CONFERENCE CAMERA
• ONE (1) PTZ VIDEO CONFERENCE CODEC PROVIDING LOCAL AND FAR SIDE SUPPORT
• ONE (1) 10-INCH CONTROL SYSTEM TOUCH PANEL TO MANAGE ROOM
• ONE (1) WIRELESS KEYBOARD AND MOUSE
• VoIP CONFERENCE PHONE WITH SPEAKER EXTENDERS
• A/V CREDENZA TO HOUSE PC, WIRELESS KEYBOARD, MOUSE, AND A/V EQUIPMENT

RECEPTION 101, WAITING AREA 103, SEATING AREA 112, VESTIBULE 130
• ONE (1) 65-INCH 4K WALL MOUNTED LED DISPLAY
• ONE (1) TILT-STYLE MONITOR WALL MOUNT
• ONE (1) SCALABLE HdBaseT STYLE TRANSMITTER/RECEIVER COMBO CAPABLE OF TOGGLING INPUT AND POWER FROM SCALING RECEIVER

TYPICAL VTC OFFICES
• ONE (1) 65-INCH 4K WALL MOUNTED LED DISPLAY
• ONE (1) TILT-STYLE MONITOR WALL MOUNT
• ONE (1) SCALABLE HdBaseT STYLE TRANSMITTER/RECEIVER COMBO CAPABLE OF TOGGLING INPUT AND POWER FROM SCALING RECEIVER
• WALL MOUNTED SOUND BAR WITH INTEGRATED ULTRA HIGH DEFINITION (UHD) VIDEO CONFERENCE CAMERA

Electronic Security System (ESS) Indicated on plans as System 1

Access Control System (ACS) will consist of conduit, and backboxes for card reader, Balanced Magnetic Sensors (BMS) and Electrified locks will be provided at each exterior entry door, Telecom, electrical, Mechanical room and other designated and rooms within the facility.

CCTV cameras system will consist of conduit, and backboxes for cameras at the main entry to the building. Conduit will route directly to LAN/IT 223.

ACS conduits will connect back to 6 inch x 6 inch x 48-inch long NEMA 12 wireway with hinged cover mounted on the wall of the Telecom Rooms 143 and 171 and two 2-inch conduits between wireways and LAN/IT 223.

All electronic equipment will be FAA Furnished and Installed.

9. Fire Protection/Detection Description

Building Code

This renovation will comply with the provisions of the International Existing Building Code (IEBC) 2018, for Alteration Level 3, and the Life Safety Code (LSC) 2018 Chapter 43 for Reconstructions. Design intent is to meet the criteria for new construction requirements of the International Building Code (IBC) and LSC as detailed below and in the design package. Where any deviation from requirements for new construction is made as allowed by IEBC or LSC for work in existing buildings, it shall be specifically noted.

Construction Type: II-B (IBC 602 and Table 601);

Use or Occupancy: Mixed-use, non-separated Assembly (Group A-3) and Business (Group B), with accessory S-2.

Allowable Area: 28,500 sqft (IBC Table 506.2),
Actual: 21,855 sqft

Allowable Stories: 3 (IBC Table 504.4),
Actual: 2

Allowable Height: 75 ft (IBC Table 504.3),
Actual: 34 ft

Fire Suppression: Fully Sprinklered

Fire Resistance Rating Requirements:

Building Element	**IBC Fire-Resistance Rating (Hours)**
Primary Structural Frame (IBC Table 601)	0
Bearing Walls Exterior (IBC Table 602, Fire separation distance>30 feet) Interior (IBC Table 601)	 0 0
Interior nonbearing walls and partitions (IBC Table 601)	0
Floor construction, including supporting beams and joists (IBC Table 601)	0
Roof construction, including supporting beams and joists (IBC Table 601)	0
Mechanical Room (equipment capacity > 400,000 Btu/hr) (IBC Table 509)	Smoke partition
Boiler Room (equipment capacity > 15 psi and 10 hp) (IBC Table 509)	Smoke partition
Corridor (IBC Table 1018.1, LSC 12.3.6(2), LSC 38.3.6.1(3), LSC 42.3.6)	0
Vertical Exit Enclosure (connecting less than 4 stories) (IBC 1020.1)	1 (Fire barrier)
Shaft Enclosure (connecting less than 4 stories) (IBC 713.4)	1 (Fire barrier)

Interior Finish

Interior Wall and Ceiling Finish (LSC 38.3.3.2)	
Corridors	Class A or B
Stairways	Class A or B
All other areas	Class A, B or C
Storage areas	Class C

Means of Egress

Minimum Egress Component Width			
Use & Occupancy	**Egress Component**	**Minimum width**	**LSC Reference**
Any	Exit access corridor	44 inches if serving 50 or more occupants	38.2.3.2
Any	Any except doors	36 inches*	7.3.4
Any	Door	32 inches	7.2.1.2.1.1
* Where a single exit access leads to an exit, its capacity in terms of width must be not less than the required capacity of the exit to which it leads (LSC 7.3.4.2). Where more than one exit access leads to an exit, each must have a width adequate for the number of persons it accommodates (LSC 7.3.4.3).			

Exit Capacity Factors

- Door: 0.2 inches/person
- Stair: 0.3 inches/person

Number of Means of Egress (IBC 1006, LSC 7.4)

- If occupant load > 500, a minimum of 3 exits are required.
- In any room/area, a minimum of 2 exits is required if occupant load is greater than 50.

Arrangement of means of egress

The minimum separation distance between two exits or exit access doors shall be not less than one-third of the maximum overall diagonal dimension of the building or area being served (LSC 7.5.1.3.3).

Exit Access, Travel Distance and Dead Ends

Occupancy	Common Path of Travel Limit (feet)	Dead End Corridor Limit (feet)	Travel Distance Limit (feet)
Assembly	75 (20 if serving 50 or more occupants) (LSC 12.2.5.1.2)	20 (LSC 12.2.5.1.3)	250 (LSC 12.2.6.2(1))
Business	100 (LSC 38.2.5.3.1)	50 (LSC 38.2.5.2.1)	300 (LSC 38.2.6.3)

Discharge from Exits (LSC 7.7)
Exits shall terminate directly at a public way or at an exterior exit discharge. All portions of the exit discharge, including yards, courts, open spaces, shall be of the required width and size to provide all occupants with a safe access to a public way.

Illumination (LSC 7.8)
The floors and other walking surfaces within an exit and within the portions of the exit access and exit discharge designated in LSC 7.8.1.1 shall be illuminated to at least the following values at floor or walking surface level:

- In areas other than stairs, the minimum illumination shall be 1 ft-candle (LSC 7.8.1.3(2)). During conditions of stair use, the minimum illumination for stairs shall be 10 ft-candle (LSC 7.8.1.3(1)).
- Illumination shall be arranged so that the failure of any single lighting unit does not result in an illumination level of less than 0.2 ft candle in any designated area (LSC 7.8.1.4).

Emergency lighting (LSC 12.2.9, 38.2.9)
Emergency lighting required in accordance with LSC 7.9.

Marking of means of egress (LSC 12.2.10, 38.2.10)
Means of egress shall have signs in accordance with LSC 7.10.

Accessibility Requirements
Comply with accessibility requirements for both ingress and egress, and throughout the buildings and project site, as required by Architectural Barriers Act (ABA) Standards (2015).

Two-Story Opening
The existing two-story stairway in the main entrance will be reclassified as a convenience stairway per NFPA 101 Section 8.6.9.2. This will allow the omission of the currently installed fire shutters from the new layout, as well as the sprinklers used to protect the glass partitions as required for atriums. A convenience stairway in an existing Business occupancy requires that the floor opening be protected by a draft stop with closely spaced sprinklers in accordance with NFPA 13 Section 9.3.5.

Fire Suppression

The building must be protected by automatic sprinkler coverage in compliance with NFPA 13. Currently, there is an existing automatic, wet-pipe sprinkler system protecting the building, which will be modified as part of the renovation. The design intent is to demolish all existing fire suppression piping and sprinkler heads back to the riser room. The existing incoming service, water meter, backflow preventer, and valve assemblies will remain to be re-used to supply the new distribution piping. The sprinkler system will be supervised by the fire alarm system.

A baffle type ceiling will be installed in the Open Office areas on the perimeter of each floor. These ceilings will be treated as open-grid ceilings in accordance with NFPA 13, Section 9.3.10, and will have a reduced sprinkler spacing to account for the baffles disruption of the spray pattern.

No fire pumps are expected to be required to supplement the site water supply. Preliminary hydraulic calculations are provided in the Appendix of this report, based on the results of the hydrant flow test conducted as part of the site survey.

Standpipes are not provided in the existing building and are not required to be provided as part of the renovation based on the elevation of the second floor relative to the lowest level of fire department access being less than 30 feet.

The building must comply with International Fire Code (IFC) requirements for fire department access and hydrant quantity and locations. No modifications to the existing site fire access or hydrant layout are expected to be required as part of the project scope.

Type ABC portable fire extinguishers will be provided throughout the building as specified by NFPA 10.

Fire Alarm

The building must be provided with a fire alarm system in compliance with NFPA 72. Currently, there is an existing addressable fire alarm system installed, which will be modified as part of the renovation. The design intent is to demolish all existing fire alarm devices, wiring, and conduit back to the fire alarm control panel (FACP) electrical room. The existing FACP, auto-dialer, and power supplies will remain to be re-used as to supply the new fire alarm devices.

The existing FACP is a Mircom FX-2000 addressable panel. New system components will include a manual pull stations, duct smoke detectors, smoke detectors, and audio/visual occupant notification devices. The system will be general evac, horn/strobe type notification (as the existing FACP can support) and will not be capable of voice broadcasting or pre-recorded message playback. A graphic annunciator is present at the front entrance and will be modified as required for the renovated system.

A baffle type ceiling will be installed in the Open Office areas on the perimeter of each floor. Ceiling mounted devices in these areas will be pendent mounted below the baffles from a unistrut system running above the baffles.

Manual pull stations will be installed within 5 feet of each exit and other locations as required by applicable codes and standards. Smoke detectors will be installed in the FACP electrical room, in elevator lobbies and machine room, and other locations required by NFPA 72 and NFPA 101. Duct-mounted smoke detectors will be provided in the supply side ductwork on air handling units over 2,000 cfm in accordance with NFPA 90A. Addressable duct smoke detectors will report to the fire alarm panel as a supervisory signal and will disable the associated air handling unit if smoke is detected. Remote test stations will be provided for all duct detectors at a nearby accessible location.

The fire alarm system will be used for elevator emergency functionality including recall and shunt.

10. Sustainability

Approach

To the extent that is appropriate to the project scope of work, the project addresses the requirements of the Council on Environmental Quality's Guiding Principles for Sustainable Federal Buildings issued in December 2020. The Guiding Principles (GPs) outline criteria and provide lists of referenced standards and strategies used to demonstrate compliance with the intent of the GPs.

The Statement of Work with Task Order 0024 indicates that the goals of the GP for Existing Buildings (EB) checklist (in contrast to the GP goals for New Construction and Modernization) will be accepted by the FAA, so EB criteria will be addressed by the project. The Statement of Work also refers to design for elements and system features that can contribute to LEED(R). Although many of the EB criteria proposed to be met by the project align with LEED criteria, especially where integrated design, building level metering, commissioning, water conservation and material characteristics are concerned; LEED documentation and certification are understood not to be required for this project.

In addition to addressing GP requirements and options, additional sustainability features have been included to address the Owner's directive to incorporate environmentally responsible materials and strategies where feasible.

In addition to the narratives describing Guiding Principles strategies and Sustainable Features a Sustainable Strategies Diagrams Appendix is provided to illustrate where the associated elements tie into the project.

Guiding Principles compliance

The EB system includes thirty (30) criteria. Of those, the twelve (12) fundamental principles designated as "Core" criteria must be met for the project to qualify as a sustainable Federal building under the Guidance. In addition, agencies must meet a minimum of 50 percent (or 9) of the remaining eighteen (18) criteria that are labeled as "Non-Core" strategies. When a Core criterion is not met, a justification such as mission restriction must be documented. If one of the proposed Non-Core strategies is considered infeasible or inappropriate by the FAA, another strategy listed on the Checklist should be identified and evaluated.

A 2020 Guiding Principles Checklist for EB is provided as an appendix to this document. The Checklist includes general information about all the requirements and optional strategies for consideration in an existing building project. Currently the design and proposed strategies, some of which require operational policies, will comply with all Core criteria and nine (9) Non-Core requirements. An outline of the strategies proposed for this project to comply with the mandatory Core and optional Non-Core criteria follows.

Core criteria

- **EB Criteria 1.1- Employ Integrated Design Principles (CORE)**
  Sustainability goals for the operation of the building must be established and incorporated into the building's Operations and Maintenance (O&M) procedures. Renovation project Teams must ensure that sustainability goals to meet the Guiding Principles have been developed as part of the project and that they are incorporated into applicable project design documents. A collaborative, integrated process is considering energy, water, materials, indoor environmental quality (IEQ), recycling, occupant health and building resilience aspects for design and construction.

- **EB Criteria 1.5 – Commissioning (CORE)**
  Commissioning as defined per Section 432 of the Energy Independence and Security Act (EISA) of 2007 and tailored to the complexity of the project will be employed. Option 1 requires compliance with 42 U.S.C. § 8253 (f)(3)(B); this will be met under the exception for buildings that undergo recommissioning. Measures for the facility in accordance with DOE Federal Energy Management Program's (FEMP) Facility Energy Management Guidelines and Criteria for Energy and Water Evaluations in Covered Facilities and Commissioning for Federal Facilities guidance must be addressed. Broadly speaking, this involves review of both the design and initial operation of energy-using systems such as HVAC and controls.

- **EB Criteria 2.1 - Energy Efficiency (CORE)**
  The renovation project will comply with Federal 10 CFR Part 433 subpart A and 10 CFR subpart A by exceeding ASHRAE 90.1 baseline consumption by 30% where life cycle cost-effective.

- **EB Criteria 2.2 – Energy Metering (CORE)**
  Building-level meters for electricity and advanced meters will be included to the maximum extent practicable. DOE's Federal Building Metering Guidance and requirements of 42 U.S.C. § 8253(e)(1) will be met by metering devices that provide data at least daily and that measure at least hourly consumption of energy.

- **EB Criteria 3.1 – Indoor Water Use (CORE)**
  The proposed new water conserving fixture rates will ensure that water use is 20 percent below a FY water use baseline.

- **EB Criteria 4.1 – Ventilation and Thermal Comfort (CORE)**
  Option 2 compliance with IgCC 801.3.1 and 801.3.2 will be met by the design. Ventilation and Thermal Comfort designs will comply with ASHRAE 62.1 and ASHRAE 55 requirements.

- **EB Criteria 4.4 - Radon Mitigation (CORE)**
  Compliance with the GP Option 1 criterion, which requires testing for radon as well as mitigation of high radon levels is specified. A radon level at or below 4 picocuries/liter (pCi/L) will be maintained. Portions of the existing radon system will be demolished and replaced. The resultant system is designed such that the specified radon threshold will not

be exceeded. (Please refer to the design analysis narrative in the mechanical section of this document and to associated mechanical drawings for more information.)

- **EB Criteria 4.7 – Environmental Smoking Control (CORE)**
  Smoking will be prohibited within the building and within 25 feet of entries and air intakes. Associated no-smoking signage will be installed as appropriate.

- **EB Criteria 5.1 – Materials – Recycled Content (CORE)**
  Products and materials that meet or exceed EPA's Comprehensive Procurement Guideline Program have been specified to increase the recycled content of materials in the project. The recommendations should extend to operations and maintenance policies.

- **EB Criteria 5.2 – Materials – Biobased Content (CORE)**
  Products and materials that meet USDA BioPreferred designations for biobased content of materials to the extent that is feasible have been specified for the modernization. The use of products with biobased content should be included in operations and maintenance policies.

- **EB Criteria 5.4 – Ozone Depleting Substances (CORE)**
  The project's mechanical design complies with either option for refrigerant compliance. Ozone depleting refrigerants will be avoided through compliance with EPA's Significant New Alternative Policy (SNAP) requirements in compliance with Option 1.

- **EB Criteria 5.5 - Hazardous Waste (CORE)**
  Because the facility has no known hazardous material and it is not anticipated that abatement will be necessary, the Guiding Principles requirement is non-applicable.

<u>Non-Core criteria</u>

- **EB Criteria 2.4 – Benchmarking (NON-CORE)**
  The FAA will need to benchmark energy use at least annually during the Operations phase and conduct regular monitoring of building energy performance in accordance with ENERGY STAR Portfolio Manager is the preferred benchmarking tool.

- **EB Criteria 3.2 – Water Metering (NON-CORE)**
  The design aligns with Option 2, which requires conformance with 2018 International Green Construction Code (IgCC) Section 601.3.4.1 Consumption Management. This management requires measurement devices with remote capability be provided to collect water use data for each water supply source. For this project, potable water is the only proposed source. It is anticipated that potable water use will exceed the 1000 gallons/day threshold that requires measurement.

- **EB Criteria 4.2 - Daylighting and Lighting Controls (NON-CORE)**
  For regularly occupied spaces that are not along the exterior wall and that do not have access to daylight, circadian-effective lighting design to optimize lighting conditions for those spaces is required. Regularly occupied spaces along the exterior wall have fenestration and control of solar gain, daylight transmittance, and glare. To avoid

contrast between perimeter and inboard spaces, circadian lighting characteristics and programming is currently proposed for multiple areas in the project, not only those rooms subject to the GP criteria.

- **EB Criteria 4.3 - Low-Emitting Materials and Products (NON-CORE)**
  Low-emitting materials are specified for interior elements such as composite wood products, flooring and carpet systems, wall panels and insulation as well as for furnishings in the scope and interior applications of adhesives, sealant, paint, and solvents. It should be noted that the Guiding Principles requirement for Existing Buildings extends these requirements to policy and purchasing procedures.

- **EB Criteria 4.5 Moisture and Mold Control (NON-CORE)**
  Renovation projects are required to comply with Option 2, which requires compliance with IgCC Sections 801.3.6. Thus, a dynamic heat and moisture analysis shall be performed on above-grade portions of the building envelope. Although the requirement extends to interior partitions where process or occupancy requirements dictate dew-point conditions that are unique with respect to other spaces in the buildings, e.g. locker rooms and/or kitchens, the design does not currently include those conditions.

- **EB Criteria 4.6 Indoor Air Quality during Construction (NON-CORE)**
  In conformance with IgCC 1001.3.1.5 an IAQ Construction management plan is specified and will require protection of materials and a flush-out or baseline IAQ monitoring. (Per the Charrette discussion, baseline testing of IAQ is under consideration.) Since the building will not be occupied during construction, the requirements of IgCC 1001.3.1.8 (to identify air intakes and doors serving occupied space during construction) are not anticipated to apply to the project.

- **EB Criteria 4.8 – Integrated Pest Management (NON-CORE)**
  Counting this as one of the Non-Core criteria to be met by the project presumes that the FAA has an Integrated Management Plan for other projects that could be adapted to this project or that FAA is willing to develop and implement a management policy that meets 41 CFR § 102-74.35 of the Federal Management Regulation.

- **EB Criteria 5.3 – Products (NON-CORE)**
  In compliance with the criteria, at least 10 products and/or materials are specified to have environmental product declarations that meet IgCC 901.4.1.4 criteria for environmental product declarations.

- **EB Criteria 5.6 - Solid Waste Management (NON-CORE)**
  In alignment with Option 4 for renovation projects, development and implementation of a construction and demolition waste management plan the construction project is specified. Diversion of more than the 50 percent minimum of non-hazardous and non-construction related materials from landfill and non-energy generating incineration, in alignment with EPA's Waste Management Hierarchy is specified as a Best Practice.

<u>Additional Sustainable Features and Strategies</u>

- Infrastructure Optimization – Provide electric vehicle charging station infrastructure such as signage and conduit for future installation of charging stations.
- Site Lighting – Comply with ASHRAE 90.1 lighting power density requirements to increase energy savings
- Energy Efficiency – The modernization will include ENERGY STAR and Federal Energy Management Program (FEMP)-designated products as appropriate to scope.
- Indoor Environmental Quality - Furniture is specified with BIFMA X7.1 certification for no/low total VOCs and formaldehyde for good indoor air quality.
- Material and Resource Conservation:
    - Specify sustainably harvested wood for rough carpentry
    - Provide area for collection of operational recyclables such as aluminum cans and plastic bottles
    - Furniture Manufacture has programs to refurbish or recycle furniture at the end of its useful life to reduce impact on landfills
- Occupant Health and Wellness – Provision of ergonomic, adjustable furniture and inviting, open stairwells to encourage voluntary physical movement are incorporated.

11. Codes and FAA Orders, Standards, and Reference Documents

Building Codes

IBC International Building Code, 2018 Edition
IEBC International Existing Building Code, 2018 Edition
IMC International Mechanical Code, 2018 Edition
IPC International Plumbing Code, 2018 Edition
IECC International Energy Conservation Code, 2018 Edition

FAA Design Guidelines

FAA ATO Terminal Facilities Standard Designs A/E Project Manual (June 2016 Edition)
HPSB High Performance Sustainable Buildings (HPSB) Guiding Principles for Existing Buildings (2016 Edition)

FAA Specifications

FAA-C-1217H Electrical Work, Premises Wiring

FAA Standards

FAA-STD-019F Lightning and Surge Protection, Grounding, Bonding and Shielding Requirements for Facilities and Electronic

Structural Design Codes

ASCE 7-16 Minimum Design Loads and Associated Criteria for Buildings and Other Structures
ACI 318-14 Building Code Requirements for Structural Concrete
TMS 402-16 Building Code Requirements for Masonry Structures
AISC 360-16 Specification for Structural Steel Buildings

National Fire Protection Association (NFPA)

NFPA 10 Standard for Portable Fire Extinguishers (2018 Edition)
NFPA 13 Standard for the Installation of Sprinkler Systems (2019 Edition)
NFPA 70 National Electrical Code (NEC) (2020 Edition)
NFPA 72 National Fire Alarm and Signaling Code (2019 Edition)
NFPA 75 Standard for the Protection of Information Technology Equipment (2020 Edition)
NFPA 101 Life Safety Code (2018 Edition)
NFPA 780 Standard for the Installation of Lightning Protection Systems (2020 Edition)

Accessibility

Architectural Barriers Act (ABA) Standards (2015 Edition)

Telecommunications Industry Association

TIA-568.0-E: Generic Telecommunications Cabling for Customer Premises.
TIA-568.1-E: Commercial Bldg. Telecom. Cabling Standard Part 1: General Requirements.
TIA-568.2-D: Balanced Twisted-Pair Telecommunications Cabling and Components Standard.
TIA-568.3-D: Optical Fiber Cabling Components Standard.
TIA-568.4-D: Broadband Coaxial Cabling and Components Standard.
TIA-569-E: Telecommunications Pathways and Spaces.

TIA-598-D: Optical Fiber Cable Color Coding.
TIA-606-C: Administration Standard for Commercial Telecommunications Infrastructure.
TIA-607-D: Commercial Bldg. Grounding (Earthing) and Bonding Requirements for Telecom. Infrastructure.
TIA-758-B: Customer Owned Outside Plant Telecommunications Infrastructure.
Building Industry Consulting Services International (BICSI) TDMM 14th Edition.
Building Industry Consulting Services International (BICSI) Outside Plant Ref. Manual, 6th Ed.

APPENDIX 1:

ARCHITECTURAL DATA SHEETS

EXTERIOR SYSTEMS

YES 600

Thermally Broken, Front Loading Storefront System

EXTERIOR WINDOW AND VESTIBULE STOREFRONT

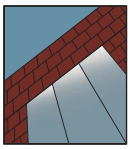

STOREFRONT SYSTEM

Product Description

The YES 600 is a thermally broken front loaded storefront system for 1" insulating glass. The system also accepts 1/4" monolithic glass with glazing adaptors. The thermal break is achieved by employing a unique nylon clip that locks the exterior and interior members together. This method of attaching face members also allows separate finishes to be used on the system. Optional face caps are available as well as an SSG Vertical Mullion option.

Product Options & Features

- 1-3/4" Face by 4-1/2" or 6" Overall Depth
- Outside Glazed
- Screw Spline or Shear Block Assembly
- Gasket With Stretch-Resistant Cord
- Integral Entrance Door Frames
- Separate Exterior/Interior Finish Options
- Nylon Clip Design Eases Installation and reduces labor costs

U-Factor **Values as low as 0.33***

CRF **Minimum 71**frame **& 62**glass

*Based on AAMA 507. Lower values may be achieved through futher simulation.

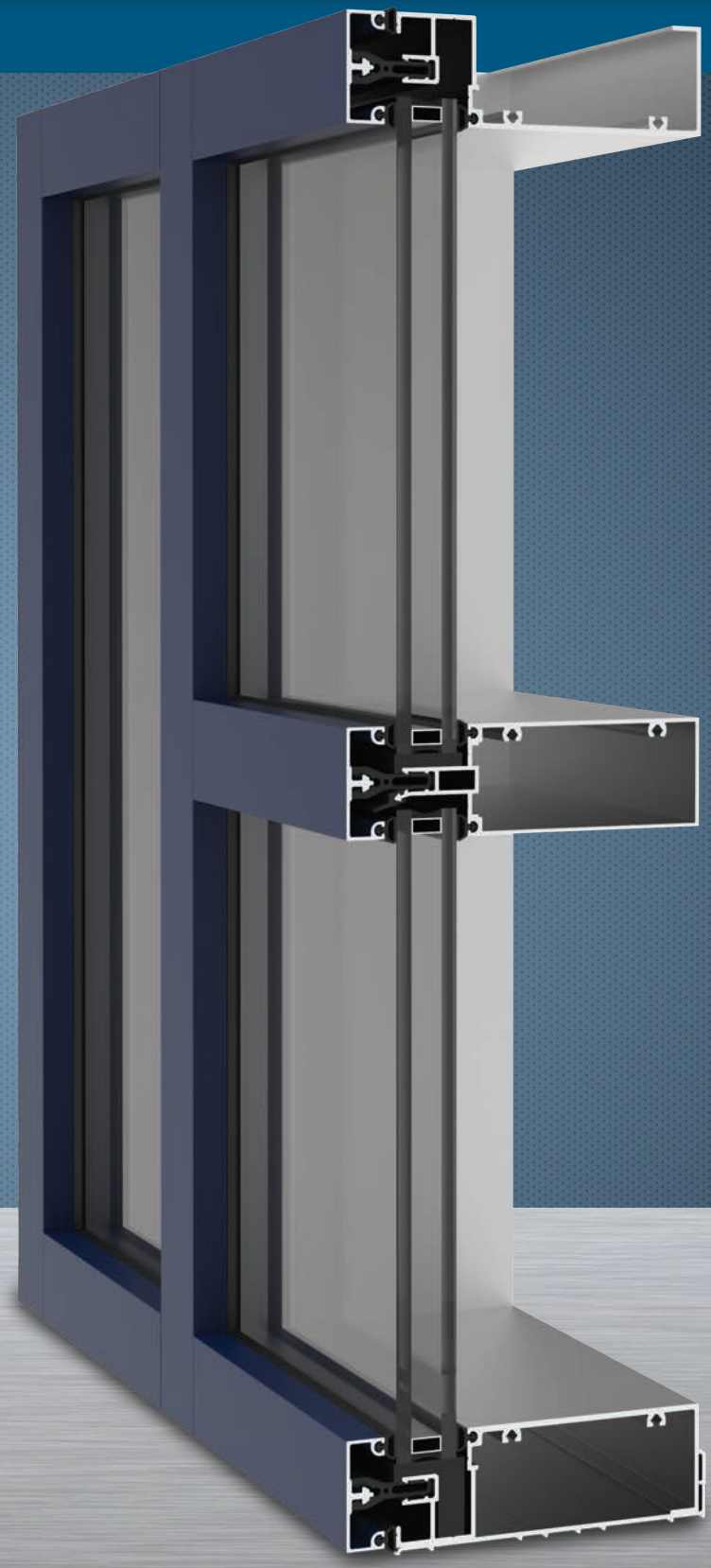

YKK ap® Quality inspires®

SKYLIGHT

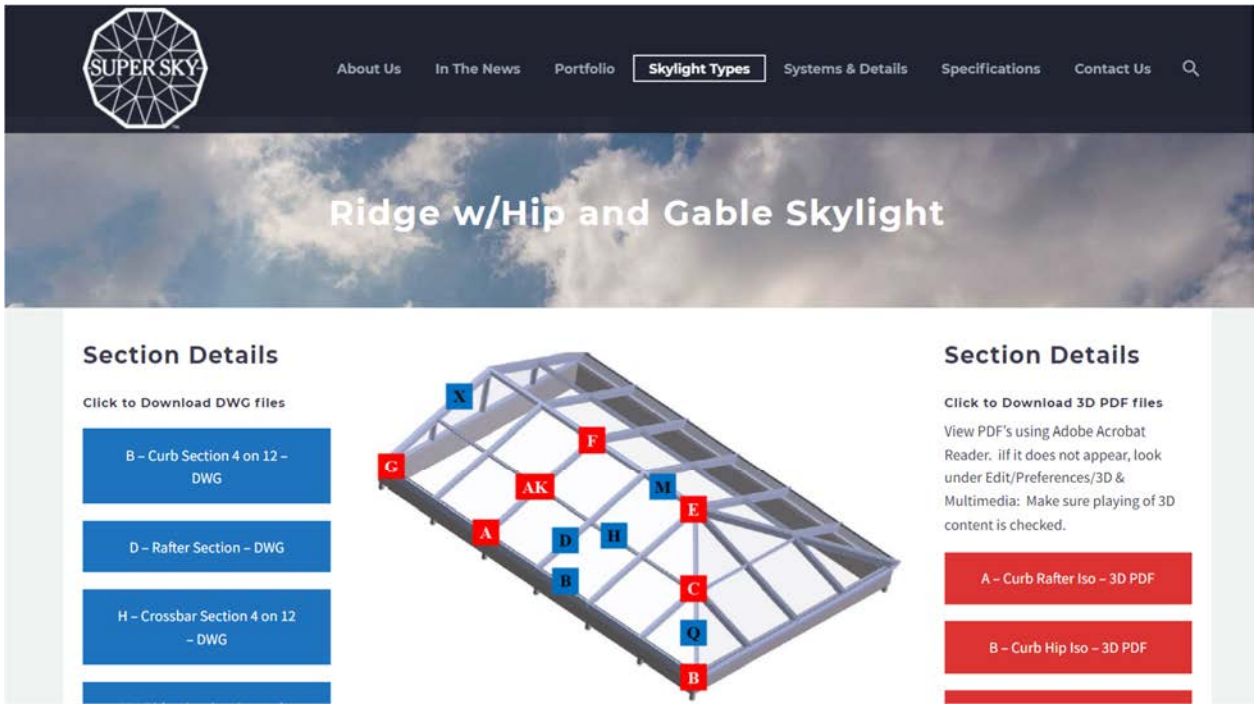
SUPER SKY
About Us
In The News
Portfolio
Skylight Types
Systems & Details
Specifications
Contact Us
Ridge w/Hip and Gable Skylight
Section Details
Click to Download DWG files
B – Curb Section 4 on 12 – DWG
D – Rafter Section – DWG
H – Crossbar Section 4 on 12 – DWG
X
F
G
AK
M
E
A
D
H
B
C
Q
B
Section Details
Click to Download 3D PDF files
View PDF's using Adobe Acrobat Reader. ilf it does not appear, look under Edit/Preferences/3D & Multimedia: Make sure playing of 3D content is checked.
A – Curb Rafter Iso – 3D PDF
B – Curb Hip Iso – 3D PDF

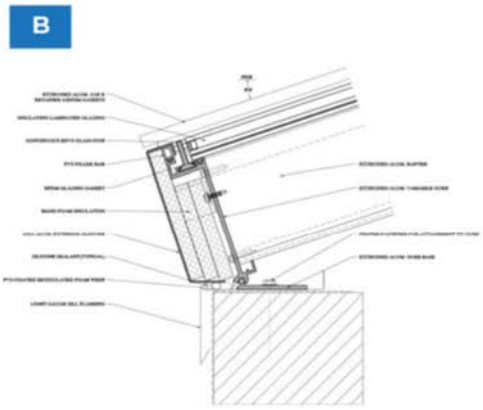
B

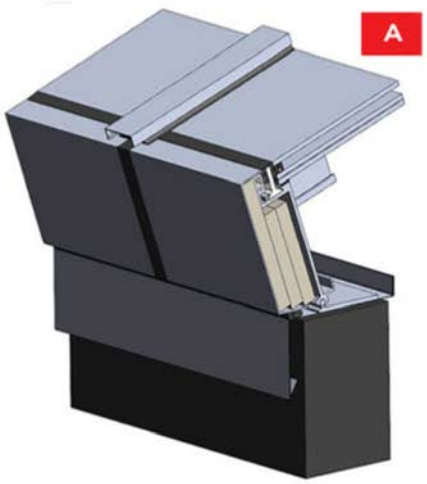
A

D

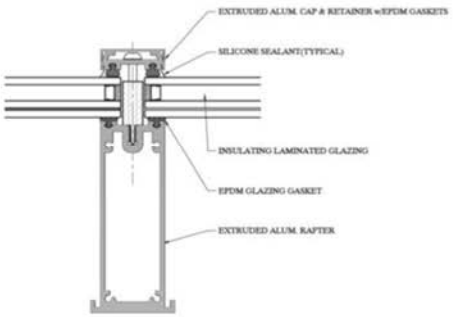
EXTRUDED ALUM. CAP & RETAINER w/EPDM GASKETS
SILICONE SEALANT(TYPICAL)
INSULATING LAMINATED GLAZING
EPDM GLAZING GASKET
EXTRUDED ALUM. RAPTER

B

Q

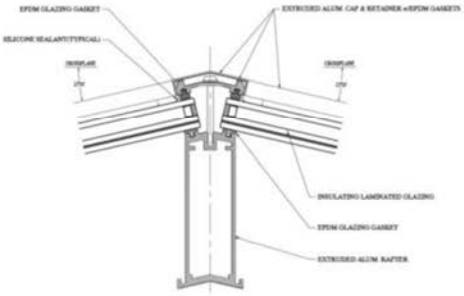
EPDM GLAZING GASKET
SILICONE SEALANT(TYPICAL)
EXTRUDED ALUM. CAP & RETAINER w/EPDM GASKETS
INSULATING LAMINATED GLAZING
EPDM GLAZING GASKET
EXTRUDED ALUM. RAPTER

F

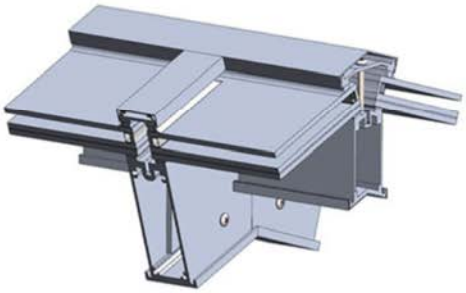

Mats Inc. Technical Data for MetroSteel™ Grate

RECESSED WALK OFF GRATE

Product Description

General	Type 304 stainless steel wire resistance welded to Type 304 stainless steel support rods, containing 80% pre-consumer recycled content
Surface Aspect	Linear wire rails resistance welded to support rods

Technical Specifications

	MetroSteel™ Grate
5/8" Thickness Dimensions	**Wire rails**: height: 0.150"; width: 0.090"; wire spacing: 0.235" O.C.; **Support rod**: height: 0.5", width: 0.070"
1-1/8" Thickness Dimensions	**Wire rails**: height: 0.150"; width: 0.090"; wire spacing: 0.235" O.C.; **Support rod**: height: 1", width: 0.070"
5/8" Weight	80 oz/sq. ft.
1-1/8" Weight	88 oz/sq. ft.
Accessories	Framing, pit liners, hold downs
Rolling load	No deformation was observed when testing a rolling load of 1000 lbs. on a single caster 5" diameter x 2" wide after 1000 passes.
Limited Warranty	7 Years (***please see full Limited Warranty document***: www.matsinc.com)

LEED v3			
IEQ Credit 4.3	LEED-NC v.3	For 1 point: low-emitting flooring	MetroSteel™ is made of stainless steel, which is an inherently nonemitting source and does not require VOC emission testing
IEQ Credit 5	LEED-NC v.3	For 1 point: permanently installed entrance system at least ten feet in length	MetroSteel™ Grate is designed for permanent installation
MR Credit 4	LEED-NC v.3	For 1 - 2 points: $ value of all materials = min. average 10% recycled content	80% pre-consumer recycled
MR Credit 5	LEED-NC v.3	For 1 - 2 points: The material must be manufactured within 500 miles of the project location	

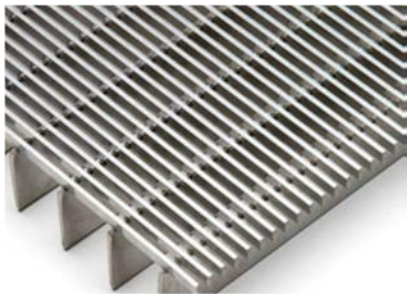

Metro Steel (1-1/8")

Metro Steel (5/8")

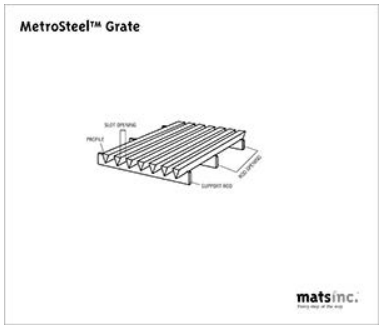

INTERIOR SYSTEMS

MODERNFOLD®

FOLDING PANEL PARTITION

ACOUSTI-SEAL® ENCORE®

Movable Walls

ACOUSTI-SEAL® ENCORE®
MOVABLE WALLS.

AUTOMATED PANELS

Automated panels are connected together in a train, automatically extending as one complete unit. Modernfold's Acousti-Seal® Encore® Automated partitions facilitate quick setup time and provide efficient and convenient separation. Automated operation provides automatic setup without the need for manually moving the partitions into place.

- 56, 54, 52 STC
- Satisfies high ceiling requirements with custom engineered panels up to 40' high utilizing #20 track
- Fully automatic operation
- Premium field acoustics
- Smooth operation
- Presto® Package Safety System including touchpad operation. (See Presto® Package Supplement for details.)
- Operable top and bottom seals
- State-of-the-art safety systems
- Optimal for usage in conference areas, schools, gyms, hospitality, board rooms, and convention spaces

Acousti-Seal® Encore® Automated	Automated	Automated #20
STC	56, 54, 52	56, 54, 52
Panel Thickness - Nominal	4.25" (108 mm)	4.25" (108 mm)
Frame	Roll formed & welded 14/16 gage steel	Roll formed & welded 14/16 gage steel
Finish Options	Vinyl, Heavy Duty Vinyl, Carpet, Fabric, Customers Own Material, Full Height Marker/Tack Board, Uncovered, Primed	Vinyl, Heavy Duty Vinyl, Carpet, Fabric, Customers Own Material, Full Height Marker/Tack Board, Uncovered, Primed
Skin/Face Options	Steel	Steel
Max. Opening Width	133'-9" (single); 267'-0" (pair) 40767 mm; 81382 mm)	235'-9" (single); 471'-0" (pair) 71857 mm; 143561 mm)
Max. Height	24' (7417 mm)	40' (12294 mm)
Hanging Weight	8 to 12 lbs/sq.ft.	8 to 12 lbs/sq.ft.
Track Options	#14, #30	#20
Closure Options	Electric, Hinged, Remote closures	Electric, Hinged, Remote closures
Pass Door Selection	Single matching construction	Single matching construction
Top/Bottom Seals	Top: Automatic Bottom: SureSet™ 2" Automatic: SureSet™ 2" & 4" Touch Seal	Top: Automatic Bottom: SureSet™ 2" Automatic: SureSet™ 2" & 4" Touch Seal

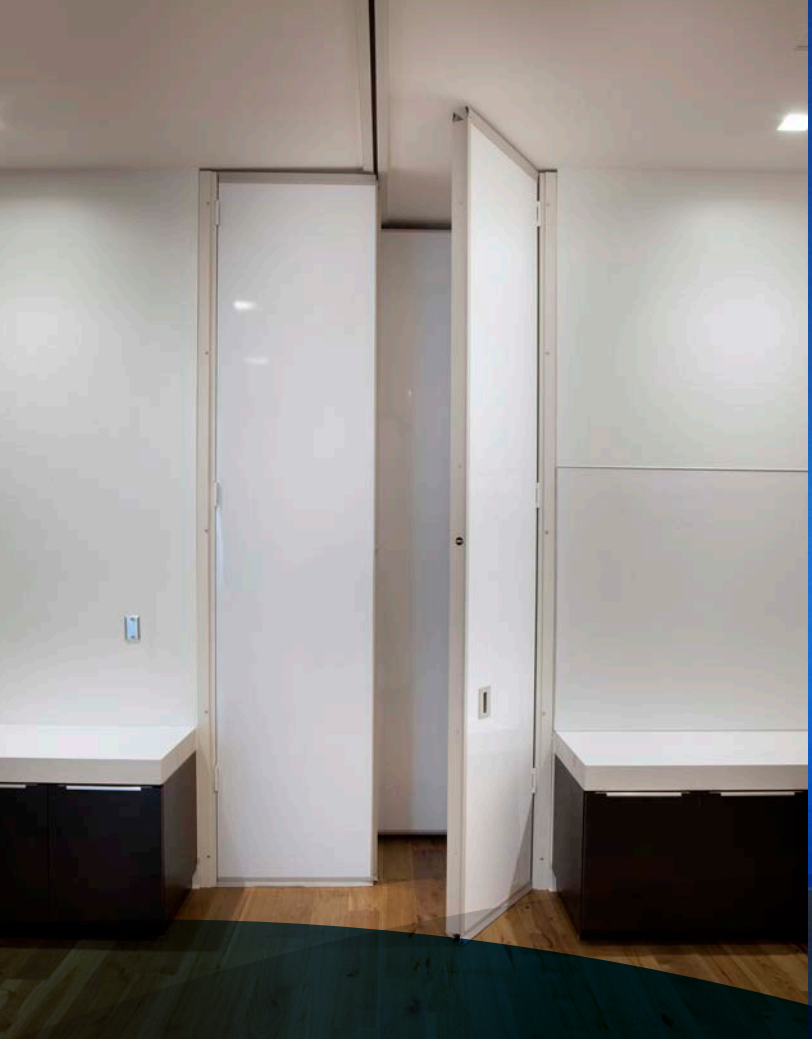

ACOUSTI-SEAL® ENCORE®
OPTIONS AND ACCESSORIES

Modernfold offers a wide variety of standard options and accessories to pair with the new Acousti-Seal® Encore®. Through partnering with various manufacturers and trades, Modernfold has the experience to offer customizable solutions to make your Acousti-Seal® Encore® partitions a perfect fit into any space.

WORK SURFACES
- Marker boards and tack boards available with no vertical trim
- Standard 4'x4' and full height or custom sizes available

PASS DOORS
- Matching construction
- Single or double configurations
- Acoustical construction
- SOSS® Hinges
- ADA compliant hardware
- Door viewer

SURESET™ SEAL SYSTEM
- Automatic top seal
- Automatic or manual bottom seal
- 120 lb. pressure to floor
- Error proof set up the first time... every time
- Available in 2" & 4" automatic, manual, or touch

ACCESSORIES
- Presto® Package
- Push plates
- Recessed exit signs
- Key locking foot bolts

POCKET DOORS
- Acoustic & non-acoustic solutions to conceal panel storage areas
- Prefabricated with jambs & hardware installed
- Prefinished with all available finish options or uncovered for field finishing

FINISH OPTIONS
- Woven fabrics
- Ribbed wall carpeting
- Standard weight vinyl wall covering
- Heavy duty vinyl wall covering
- Custom material
- Uncovered for field finishing

High performance, long lasting suspension systems by Modernfold.

Modernfold takes pride in the reliability and durability of its all steel suspension systems. As a result, Modernfold offers a 5 year warranty for #17 Smart Track® and a 20 year warranty for #14 Smart Track® and #20 track. Smart Track® technology in conjunction with a durable steel suspension provides easy operation along with worry free maintenance.

Smart Track®

Modernfold continues to expand the programming capabilities of the #17 and #14 steel track and trolley systems. Smart Track® allows the user to solve even the most complex layout and switching challenges without the added expense and maintenance requirements of electric or pneumatic switches.

#17 and #14 steel track designs provide added staging and sorting abilities while reducing operational confusion, setup costs, and trolley stress.

#20 Track

For extreme heights and weight, #20 Track provides the same features and benefits as #14 steel track. With the ability to suspend panels as tall as 40', #20 track allows for space division in some of the most challenging environments.

Multi-Directional Systems

The RT200 and RT100 right angle suspension systems provide an alternative where grid layouts are a must. Right angle track systems allow the user to set-up and arrange the partitions in numerous configurations.

#17 Smart Track®

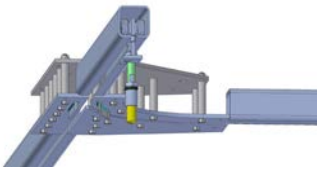

#14 Smart Track®

#20 Track

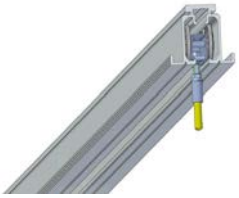

#30 Track

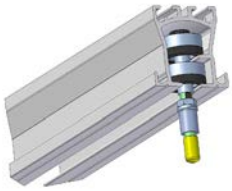

RT200 / RT100

05 7310 CRL GRS TAPER-LOC® Dry Glaze Glass Railing System

For 1/2" to 3/4" (12 to 19 mm) Monolithic Tempered Glass, Supports All Mounting Methods

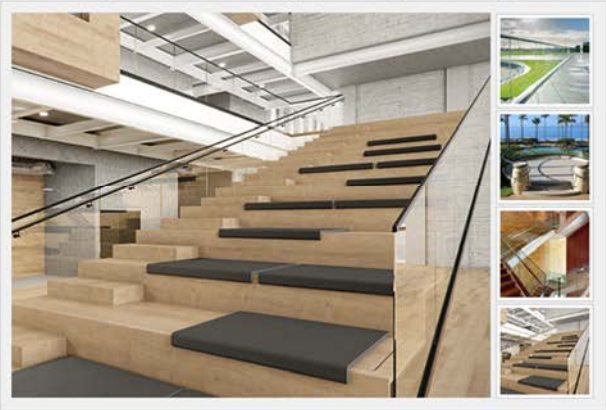

- **First and Only ICC-Approved Base Shoe System** ESR-3269
- Reduces Installation Time by 50%
- Meets and Exceeds IBC Standards
- Easily Allows You to Remove, Adjust or Replace Glass Panels
- "Most Innovative Commercial Hardware Product" -Glass Magazine
- "Editor's Choice" -Architectural Record
- Available in Matte Black Finish

With CRL's TAPER-LOC® Dry Glaze System, no longer is messy cement required. Our System not only self-centers the glass, but plumbs it as well, and is all done from the floor side of the railing. Designed for Interior and Exterior Applications, and available in eight architectural finishes.

U.S. Patent Numbers 8,122,654 & 8,201,366 and Commonwealth of Australia Patent No. 2008207524

SPEC / DATA | CAD/PDF DETAILS | BIM OBJECTS
LEED® STATEMENT | RELATED PRODUCTS | PROJECT GALLERY
VIEW CATALOG | INFO REQUEST | VIDEO
ICC-ES REPORT

SHARE >

GLASS GUARDRAIL SYSTEM IN LOBBY

GLAZED PARTITION SYSTEM

BRINGING NEW LIGHT TO INTERIOR ARCHITECTURE

FRAMEWORKS

EXPANSIVE NEW LIGHT

Frameworks brings new light to interior architecture with doors, frames and windows that pair custom and standard glazing options with an expansive range of aluminum frame design options to give you the flexibility to create distinctive interiors.

Featuring smart modular design, snap-on trim, recessed glazing pockets and concealed fasteners – you will find that great design is in the details. Whatever your vision – angled, segmented or radiused – Frameworks can create it for new construction or retrofit.

QUALITY CRAFTSMANSHIP

Frameworks delivers well thought out custom solutions, quality-crafted to your specifications. Project components are precut and packaged by opening to streamline installation, prevent installer error, and save time.

DESIGNER'S ARRAY OF FINISHES

Choose from:

Anodized finish options:

- Class II Clear
- Custom finishes in Bronze (medium and dark), Black and Champagne

Electrostatically-applied paint finishes available in:

- Our standard selection of bronze, black, and white, or
- Custom matched paint finishes

EXCEPTIONAL SERVICE & FOLLOW THROUGH

Renowned for exceptional customer service and follow through, Frameworks' short lead times make it the confident choice for fast-track and tenant fit-out projects.

DEFINING THE LIGHT WITHIN

FOR NEW CONSTRUCTION & RETROFIT

- Class A Office Buildings
- Commercial Facilities
- College and University Campuses
- K-12 Buildings
- Healthcare Facilities
- Government & Military Structures

FOR LEED CERTIFIED & SUSTAINABLE PROJECTS

Frameworks' products are LEED contributing and made of aluminum (a recycled and readily recyclable material); they are manufactured in the USA and are lightweight to ship. The use of Frameworks frames, windows and doors allows for shared light that creates healthy and happy work environments.

FRAMEWORKS FRAMES, WINDOWS & DOORS

FRAMES

Frameworks frames are manufactured to integrate into standard drywall partitions but can be adapted to accommodate varying wall conditions. We expertly engineer angled, segmented and radiused frame configurations to any specification.

Choose standard or custom anodized finishes, or electrostatically applied painted finishes. Frames can arrive precisely pre-cut and individually packaged by opening for smart installation.

TWO FRAME SYSTEMS TO CHOOSE FROM

TYPE II FRAME SYSTEM

Type II Frame System is a modular system that was developed for greater versatility and strength, and easier installation. It features snap-on trim that conceals the fasteners and provides clean design lines. Type II Framing is installed after the walls are finished and painted, which exempts it from critical path scheduling and makes it the ideal choice for design build or fast-track fit-out projects. Type II System accommodates 1/4", 3/8" and 1/2", glazing.

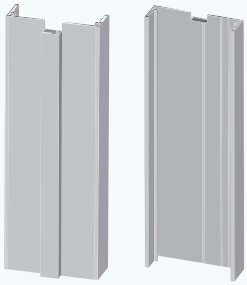

TYPE II FRAME SYSTEM

TYPE I FRAME SYSTEM

Type I Frame System – the original frame system in the industry – screws into the sheetrock and requires taping and floating to finish. Type I System accommodates 1/4" and 3/8" glazing.

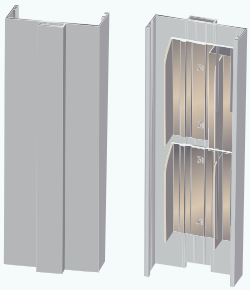

TYPE I FRAME SYSTEM

FRAME SYSTEM COMPARISON

	TYPE II FRAME SYSTEM			TYPE I FRAME SYSTEM		
Design	Rectilinear			Rectilinear		
Face Profile	1 1/2" or 2"			1 1/2"		
Return	9/32"					
Snap-on Trim	1 1/4" 1 1/2" 2"					
Wall Thickness	.062"			.062"		
Throat Sizes	3 1/2" 3 3/4" 4 5/8" 4 7/8" 5 1/4" 5 1/2" 6 1/8" 7 1/4"			3 3/4" 4 7/8"		
FIRE RATINGS	RATING	MIN THROAT	MAX SIZE	RATING	MIN THROAT	MAX SIZE
Door Frame	20 Min*	3 1/2"	3090 (WHI-495-0817) 6090 (WHI-495-0894)	20 Min*	3 3/4"	3090 (WHI-495-0817) 2090 (WHI-495-0823)
	45 Min	3 1/2"	3090 (WHI-495-0965) 6090 (WHI-495-0965)			
	90 Min	3 5/8"	3090 (WHI-495-1424) 6090 (WHI-495-1424)			
Door Frame with Sidelight	20 Min	3 1/2"	3090 DF (WHI-495-0893) 2090 SL (WHI-495-0893)	20 Min	3 3/4"	3090 DF (WHI-495-0963) 2090 SL (WHI-495-0963)
Borrowed Light	20 Min	3 1/2"	3090 (WHI-495-0964) 5050 (WHI-495-0964)	20 Min	3 3/4"	5050 (WHI-495-0964) 4090 (WHI-495-0964)

* Positive and negative pressure

NOTE: 45 minute ratings can be achieved with fixed throat sizes. 20 minute and 90 minute rating can be achieved with fixed or adjustable throat sizes 2 7/8" to 7 7/8".

TOILET PARTITIONS

Floor-Mounted Overhead-Braced Restroom Partitions

Stainless Steel — Series 400 – Sentinel™

This is the most popular style of partitions. It is attached to the floor and stabilized at the top of the pilaster with anti-grip headrail. Floor-mounted overhead-braced material is recommended for heavy traffic or vandalism-prone areas. It does not require any special floor or ceiling construction which makes it suitable for new or existing construction.

Construction

Doors, panels and pilasters consist of two sheet metal faces insulated with a moisture-resistant honeycomb core that is adhered to the inner surface and set under pressure to cure. All are manufactured from 300 Series stainless steel with a #4 satin brushed finish.

Permaseal™ Edge

Mills is the only manufacturer to offer the Permaseal Edge. Edges are formed to interlock together to provide a tight fit without crown molding.

Panels

Panels are 1" thick, constructed from 22 gauge stainless steel. Corners are welded underneath a clip that is affixed to all corners.

Doors

Doors are 1" thick, constructed from 22 gauge stainless steel. Corners are welded underneath a clip that is affixed to all corners. Each door includes internal 16 and 14 gauge welded reinforcements at the top and bottom hinge locations with a factory installed concealed true gravity cam. The closing position of each hinge is fully adjustable. A pre-punched hole permits field installation of the ADA-compliant concealed slide latch.

Pilasters

Pilasters are 1¼" thick, constructed from 20 gauge stainless steel. The floor end of the pilaster shall be provided with an internally welded 18 gauge bracket(s) that will accept a 5/16" stainless steel hex bolt. The bracket(s) shall connect to stainless steel "L" bracket(s) that are secured to the floor with stainless steel fasteners. The hex bolt(s), which are provided in the shoe kit, can be added to the floor end of the pilaster for leveling.

Hardware

Mills standard hardware is constructed from heavy-duty grade chromed Zamac. Compartments are provided with all hardware and zinc-plated fasteners to complete installation for applications with concrete floors and masonry block walls.

Door Hardware

Wraparound hinges are thru-bolted to the pilasters and the concealed slide latch includes an emergency egress feature. The slide latch does not require a twisting motion and complies with all Federal ADA guidelines. The strike/keeper is wraparound and thru-bolted. Doors 32" wide or less are provided with a combination coat hook/bumper. Doors 34" wide or 36" wide are provided with an individual coat hook, door bumper and door pulls. Torx-head fasteners are supplied with all hardware.

Brackets

Stirrup-type single-ear, double-ear and U-brackets are provided with torx-head fasteners.

Headrail

Etched and anodized aluminum headrail is extruded with an anti-grip profile. It clamps over the pilaster and is secured at the wall with plastic brackets.

Shoes

Shoes are 1-piece, 4" high, 304 Series stainless steel with #4 satin brushed finish and are secured to the inside face of the pilaster with stainless steel Torx-head fasteners.

Standard Selections (Must select one from each category)

Finish
- ◯ Satin Brushed (STD) BRUSHED STAINLESS STEEL

Texture
- ◯ Leather Grain

Hinges
- ◯ Chromed Zamac Wraparound Gravity Hinge (STD)
- ◯ Stainless Steel Wraparound Gravity Hinge
- ◯ Continuous Aluminum Spring-Loaded Hinge
- ◯ Continuous Stainless Steel Spring-Loaded Hinge

Door Hardware
- ◯ Chromed Zamac Concealed Slide Latch and Keeper (STD)
- ◯ Stainless Steel Concealed Slide Latch and Keeper
- ◯ Zamac Surface-Mounted Slide Latch and Keeper
- ◯ Stainless Steel Surface-Mounted Slide Latch and Keeper

Brackets
- ◯ Chromed Zamac Stirrup Brackets (STD)
- ◯ Stainless Steel Stirrup Brackets
- ◯ Continuous Stainless Steel Brackets
- ◯ Continuous Aluminum Brackets

Corners
- ◯ Clipped Corners (STD)
- ◯ Welded Corners/Ground Smooth

Optional Selections

Miscellaneous
- ☐ Grab Bar Reinforcements
- ☐ Cutouts
- ☐ Solid Particle Board Core (must select doors, panels and/or pilasters)
  - ☐ Doors
  - ☐ Panels
  - ☐ Pilasters
- ☐ No Site

Extra Height
- ☐ 69"/72" H Doors and Panels**

**ADA stalls will have 69"H doors and panels, 9" AFF. All other stalls in the room will be 72"H/6" AFF to allow for maximum privacy.

Verify all rough-in dimensions prior to installation.

Consult local and national codes. Conformity and compliance to local and national codes is the responsibility of the installer.

GREENGUARD
PRODUCT CERTIFIED FOR LOW CHEMICAL EMISSIONS
UL.COM/GG
UL 2818
GOLD

This information is subject to change without notice.

Bradley_Partitions_StainlessSteel_OverheadBraced

© 2019 Bradley

P.O. Box 309, Menomonee Falls, WI 53052-0309
800 BRADLEY (800 272 3539) +1 262 251 6000
bradleycorp.com

OPTIMA®
OPTIMA® PB
with Plant-based Binder
Tegular
fine texture

CEILING SYSTEMS

SUSTAIN®
High Performance Sustainable Ceiling Systems (PB Suffix Only)

24/7 DEFEND™
Solutions for Healthier, Safer Spaces
CONTAIN CLEAN PROTECT

ACP1 2 x 2 and ACP 2 4 X 4

CAD/Revit® drawings at:
armstrongceilings.com/cadrevit

DESIGNFlex™
A New World of Choice for Ceiling Systems

▲ Optima® Tegular 24" x 24" panels with Suprafine® 9/16" suspension system

plus capabilities to do more

armstrongceilings.com/capabilities
See more photos at:
armstrongceilings.com/photogallery

Fine-textured panels with more large-size, standard panel options than any other product family. Offers high sound absorption.

KEY SELECTION ATTRIBUTES

- DESIGNFlex® options include shapes and made-to-order sizes available to ship in 3 weeks
- Optima® PB panels are part of the Sustain® portfolio, and meet the most stringent industry sustainability compliance standards today
- Smooth, clean, durable finish – Washable, Impact-resistant, Scratch-resistant, Soil-resistant
- Items with PB suffix are manufactured with a plant-based binder
- Outstanding acoustical performance for open plan areas, both Articulation Class 180-200 and NRC 0.90-1.00
- new CleanAssure™ family of products – includes disinfectable panels, suspension systems, and trim
- Mold- and mildew-resistant surface
- Energy-saving high light-reflective finish
- Non-directional visual reduces scrap and installation time
- Sag-resistant large-size panels
- Compatible with TechZone® Ceiling Systems
- 30-Year Limited System Warranty against visible sag, mold, and mildew
- Available with factory-cut holes for USAI® trimless downlight fixture integration.

COLOR

White
(WH)

DETAILS (Other Suspension Systems compatible. Refer to listing on next page.)

1. Optima® Square Tegular
2. Optima® Tegular with Prelude® 15/16" suspension system
3. Optima® Tegular with Interlude® XL® HRC 9/16" suspension system
4. Optima® Tegular with Silhouette® 9/16" suspension system with 1/8" reveal
5. Suprafine® ML, XL®, and XL® HRC with Blizzard White finish

TechLine 877 276-7876
armstrongceilings.com/optima

Armstrong®
CEILING & WALL SOLUTIONS

OPTIMA®
OPTIMA® PB

with Plant-based Binder

Tegular
fine texture

SUSTAIN®
High Performance
Sustainable Ceiling Systems
(PB Suffix Only)

Declare.
(PB Suffix Only)

GREENGUARD
Gold Certified

LEED® | WELL™ | LBC

UP TO 71% RECYCLED CONTENT

Calculate sustainability with GreenGenie™
armstrongceilings.com/greengenie

energy management	construction waste mgmt	regional materials	design for flexibility	EPD	recyclable/ extended producer resp.	biobased materials	recycled content	sourcing of raw materials	material ingredient reporting	low emitting/ materials	lighting quality	acoustics
✔	✔	✔	✔	✔	✔		✔	✔	✔	✔	✔	✔
		LOCATION DEPENDENT		PB ONLY					PB ONLY	PB ONLY		

VISUAL SELECTION

PERFORMANCE SELECTION

Dots represent high level of performance. $$$$

armstrongceilings.com/catdwgs	Susp. Dwg.	Item No.	Dimensions (Inches)	UL Classified Acoustics NRC	+ CAC =	Total Acoustics[1]	Articulation Class	Fire Performance	Light Reflect	Bio-Block Anti-Mold/ Mildew	Humi-Guard+ Sag Resistant	Certified Low VOC Emissions	CleanAssure™ Disinfectable Panels Fog	DURABILITY Wash	Impact	Scratch	Soil	Recycle Program	30-Yr Warranty
OPTIMA® 9/16" Square Tegular	26, 43, 47, 51, 55	**1410**	4 x 48 x 1"	N/A	N/A	N/A	N/A	Class A	0.88 •	•	•	N/A	•	•	•	•	•	•	•
		1411	4 x 60 x 1"	N/A	N/A	N/A	N/A	Class A	0.88 •	•	•	N/A	•	•	•	•	•	•	•
		1413	6 x 12 x 1"	N/A	N/A	N/A	N/A	Class A	0.88 •	•	•	N/A	•	•	•	•	•	•	•
		1415	6 x 42 x 1"	N/A	N/A	N/A	N/A	Class A	0.88 •	•	•	N/A	•	•	•	•	•	•	•
		1403	6 x 48 x 1"	N/A	N/A	N/A	N/A	Class A	0.88 •	•	•	N/A	•	•	•	•	•	•	•
		1417	6 x 54 x 1"	N/A	N/A	N/A	N/A	Class A	0.88 •	•	•	N/A	•	•	•	•	•	•	•
		1407	6 x 60 x 1"	N/A	N/A	N/A	N/A	Class A	0.88 •	•	•	N/A	•	•	•	•	•	•	•
		1409	6 x 96 x 1"	N/A	N/A	N/A	N/A	Class A	0.88 •	•	•	N/A	•	•	•	•	•	•	•
		3263	12 x 24 x 1"	0.95 •	N/A	N/A	190 •	Class A	0.88 •	•	•	N/A	•	•	•	•	•	•	•
		3290	12 x 48 x 1"	0.95 •	N/A	N/A	190 •	Class A	0.88 •	•	•	N/A	•	•	•	•	•	•	•
		1414	12 x 96 x 1"	0.95 •	N/A	N/A	190 •	Class A	0.88 •	•	•	N/A	•	•	•	•	•	•	•

[1] Total Acoustics® ceiling panels have an ideal combination of sound absorption and sound blocking in one product.
Optima® items with the PB suffix are included in the Sustain® portfolio and carry Declare® certification.

FIBERGLASS – Standard

OPTIMA®
OPTIMA® PB
with Plant-based Binder
Tegular
fine texture

SUSTAIN®
High Performance
Sustainable Ceiling Systems
(PB Suffix Only)

Declare.
(PB Suffix Only)

GREENGUARD
Gold Certified
(details below)

LEED® WELL™ LBC

UP TO 71% RECYCLED CONTENT

Calculate sustainability with GreenGenie™
armstrongceilings.com/greengenie

energy management	construction waste mgmt	regional materials	design for flexibility	EPD	recyclable/ extended producer resp.	biobased materials	recycled content	sourcing of raw materials	material ingredient reporting	low emitting/ materials	lighting quality	acoustics
✓	✓	✓	✓	✓	✓		✓	✓	✓	✓	✓	✓
		LOCATION DEPENDENT		PB ONLY						PB ONLY	PB ONLY	

VISUAL SELECTION

PERFORMANCE SELECTION
Dots represent high level of performance. $$$$

armstrongceilings.com/catdwgs	Susp. Dwg.	Item No.	Dimensions (Inches)	UL Classified Acoustics (NRC + CAC =)	Total Acoustics[1]	Articulation Class (AC)	Fire Performance	Light Reflect	Anti-Mold/ Mildew (Bio-Block)	Sag Resistant (Humi-Guard+)	Certified Low VOC Emissions	CleanAssure™ Disinfectable Panels: Fog	DURABILITY: Wash	Impact	Scratch	Soil	Recycle Program	30-Yr Warranty
OPTIMA® 9/16" Square Tegular	26, 43, 47, 51, 55	3276	20 x 54 x 1"	0.95 •	N/A	N/A	N/A	Class A	0.88 •	•	•	N/A	•	•	•	•	•	•	•
		3266	20 x 56 x 1"	0.95 •	N/A	N/A	N/A	Class A	0.88 •	•	•	N/A	•	•	•	•	•	•	•
		3277	20 x 60 x 1"	0.95 •	N/A	N/A	190 •	Class A	0.88 •	•	•	N/A	•	•	•	•	•	•	•
		3279	21 x 24 x 1"	0.95 •	N/A	N/A	190 •	Class A	0.88 •	•	•	N/A	•	•	•	•	•	•	•
		3251 3251PB	24 x 24 x 1"	0.95 •	N/A	N/A	190 •	Class A	0.88 •	•	•	N/A •	•	•	•	•	•	•	•
		3254	24 x 24 x 1-1/2"	1.00 •	N/A	N/A	200 •	Class A	0.88 •	•	•	N/A	•	•	•	•	•	•	•

MORE ITEMS ▶

[1] Total Acoustics® ceiling panels have an ideal combination of sound absorption and sound blocking in one product.
Optima® items with the PB suffix are included in the Sustain® portfolio and carry Declare® certification.

SUSPENSION SYSTEMS

15/16"

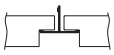
Prelude®

9/16"

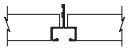
Silhouette® 1/4" Reveal

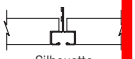
Silhouette 1/8" Reveal

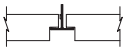
Suprafine®

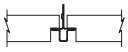
Interlude®

Blizzard White – Suspension System Finish
A color and texture coordinated suspension system to complement Optima® ceiling panels for a monolithic look and feel.
Available for: Prelude® XL® and XL® HRC, Suprafine ML, XL, and XL HRC, Silhouette® XL® 1/4" and 1/8" Reveal, Interlude® XL® HRC

ACCESSORIES (must be ordered separately)

435

Stabilizer Clip (3/4" & 1")

Recommended for panels 60" and greater in length
NOTE: Panels 60" up to 96" – One clip near mid-point of each long edge.
Panels 96" and over – Two clips at 1/3 points of each long edge.

PHYSICAL DATA

Material
3355 – Fiberglass with DuraBrite® acoustically transparent membrane; CAC backing
All other items – Fiberglass with DuraBrite acoustically transparent membrane

Surface Finish
DuraBrite scrim with factory-applied latex paint

Fire Performance
Class A: ASTM E84 and CAN/ULC S102 surface burning characteristics. Flame Spread Index of 25 or less. Smoke Developed Index of 50 or less (UL labeled).

ASTM E1264 Classification
Type XII, Form 2, Pattern E
Fire Class A

Humidity/Sag Resistance
HumiGuard® Plus ceiling panels are recommended for areas subject to high humidity, up to, but not including, standing water and outdoor applications.

Anti-Mold/Mildew
Ceiling tiles with BioBlock® performance resist the growth of mold and mildew on the tile surface.

VOC Emissions
(PB suffix items only)
GREENGUARD Gold Certified
This product has been UL validated to be Formaldehyde-Free. UL.COM/ECV.
Third-party certified compliant with California Department of Public Health CDPH/EHLB/Standard Method Version 1.2, 2017. This standard is the guideline for low emissions in LEED®, WELL Building Standard™, Living Building Challenge® (LBC), CalGreen Title 24, ANSI/ASHRAE/USGBC/IES Standard 189; ANSI/GBI Green Building Assessment Protocol.

PRODUCT CERTIFIED FOR LOW CHEMICAL EMISSIONS UL.COM/GG UL 2818

GREENGUARD GOLD

Primary (Embodied) Energy
See all LCA information on our EPDs.

High Recycled Content
Contains greater than 50% total recycled content. Total recycled content based on product composition of post-consumer and pre-consumer (post-industrial) recycled content per FTC.

Insulation Value
3254 – R Factor – 6.0 (BTU units)
R Factor – 1.05 (Watts units)

Cleaning and Disinfecting
Cleaning and CDC recommended disinfecting options available on armstrongceilings.com/cleaning

30-Year Performance Guarantee & Warranty
When installed with Armstrong® Suspension System. Details at armstrongceilings.com/warranty

Weight; Square Feet/Carton
1403 – 0.55 lbs/SF; 24 SF/ctn
1407 – 0.55 lbs/SF; 30 SF/ctn
1409 – 0.55 lbs/SF; 96 SF/ctn
1410 – 0.55 lbs/SF; 16 SF/ctn
1411 – 0.55 lbs/SF; 20 SF/ctn
1413 – 0.55 lbs/SF; 6 SF/ctn
1414, 3263, 3290 – 0.55 lbs/SF; 48 SF/ctn
1415 – 0.55 lbs/SF; 21 SF/ctn
3251 – 0.46 lbs/SF; 48 SF/ctn
1417 – 0.55 lbs/SF; 27 SF/ctn
1418 – 0.55 lbs/SF; 6 SF/ctn
3254 – 0.64 lbs/SF; 32.5 SF/ctn
3276 – 0.55 lbs/SF; 75 SF/ctn
3277 – 0.55 lbs/SF; 100 SF/ctn
3266 – 0.55 lbs/SF; 62.22 SF/ctn
3279 – 0.45 lbs/SF; 42 SF/ctn

Minimum Order Quantity
1 carton

Metric Items Available
3251M, 3254M, 3256M, 3257M, 3355M – Metric items are subject to extended lead times and minimum quantities. Contact your representative for more details.

FIBERGLASS – Standard

OPTIMA®
OPTIMA® PB

with Plant-based Binder
Tegular
fine texture

SUSTAIN® High Performance Sustainable Ceiling Systems (PB Suffix Only)

Declare. (PB Suffix Only)

GREENGUARD Gold Certified

LEED® WELL™ LBC

UP TO 71% RECYCLED CONTENT

Calculate sustainability with GreenGenie™ armstrongceilings.com/greengenie

energy management	construction waste mgmt	regional materials	design for flexibility	EPD	recyclable/ extended producer resp.	biobased materials	recycled content	sourcing of raw materials	material ingredient reporting	low emitting/ materials	lighting quality	acoustics
✔	✔	✔	✔	✔	✔		✔	✔	✔	✔	✔	✔
		LOCATION DEPENDENT		PB ONLY					PB ONLY	PB ONLY		

VISUAL SELECTION

PERFORMANCE SELECTION

Dots represent high level of performance. $$$$

armstrongceilings.com/catdwgs	Susp. Dwg.	Item No.	Dimensions (Inches)	UL Classified Acoustics NRC	+ CAC =	Total Acoustics[1]	Articulation Class	Fire Performance	Light Reflect	Bio-Block Anti-Mold/ Mildew	Humi-Guard+ Sag Resistant	Certified Low VOC Emissions	CleanAssure™ Disinfectable Panels Fog	DURABILITY Wash	Impact	Scratch	Soil	Recycle Program	30-Yr Warranty
OPTIMA® 9/16" Square Tegular	26, 43, 47, 51, 55	3355	24 x 24 x 1"	0.90 •	26	N/A	200 •	Class A	0.88 •	•	•	N/A	•	•	•	•	•	N/A	•
		3257 3257PB	24 x 48 x 1"	0.95 •	N/A	N/A	190 •	Class A	0.88 •	•	•	N/A •	•	•	•	•	•	•	•
		3265 3265PB	24 x 60 x 1"	0.95 •	N/A	N/A	190 •	Class A	0.88 •	•	•	N/A •	•	•	•	•	•	•	•
		3261 3261PB	24 x 72 x 1"	0.95 •	N/A	N/A	190 •	Class A	0.88 •	•	•	N/A •	•	•	•	•	•	•	•
		3262 3262PB	24 x 96 x 1"	0.95 •	N/A	N/A	190 •	Class A	0.88 •	•	•	N/A •	•	•	•	•	•	•	•
		3283	27 x 30 x 1"	0.95 •	N/A	N/A	190 •	Class A	0.88 •	•	•	N/A	•	•	•	•	•	•	•
		3268	28 x 30 x 1"	0.95* •	N/A	N/A	190* •	Class A	0.88 •	•	•	N/A	•	•	•	•	•	•	•
		3269	28 x 60 x 1"	0.95 •	N/A	N/A	190 •	Class A	0.88 •	•	•	N/A	•	•	•	•	•	•	•
		3259	30 x 30 x 1"	0.95 •	N/A	N/A	190 •	Class A	0.88 •	•	•	N/A	•	•	•	•	•	•	•
		3284	30 x 54 x 1"	0.95 •	N/A	N/A	190 •	Class A	0.88 •	•	•	N/A	•	•	•	•	•	•	•
		3289	30 x 56 x 1"	0.95 •	N/A	N/A	190 •	Class A	0.88 •	•	•	N/A	•	•	•	•	•	•	•
		3285	30 x 60 x 1"	0.95 •	N/A	N/A	190 •	Class A	0.88 •	•	•	N/A	•	•	•	•	•	•	•
		3287	42 x 48 x 1"	0.95 •	N/A	N/A	190 •	Class A	0.88 •	•	•	N/A	•	•	•	•	•	•	•
		3288	44 x 48 x 1"	0.95 •	N/A	N/A	190 •	Class A	0.88 •	•	•	N/A	•	•	•	•	•	•	•
		3256 3256PB	48 x 48 x 1"	0.95 •	N/A	N/A	190 •	Class A	0.88 •	•	•	N/A •	•	•	•	•	•	•	•
		3249	48 x 54 x 1"	0.95 •	N/A	N/A	190 •	Class A	0.88 •	•	•	N/A	•	•	•	•	•	•	•

[1] Total Acoustics® ceiling panels have an ideal combination of sound absorption and sound blocking in one product.
Optima® items with the PB suffix are included in the Sustain® portfolio and carry Declare® certification.
* These items are not UL classified.

FIBERGLASS – Standard

SOUNDSCAPES® Shapes

Acoustical Clouds
fine texture

Custom looks with standard products

ACP3

CAD/Revit® drawings at:
armstrongceilings.com/cadrevit

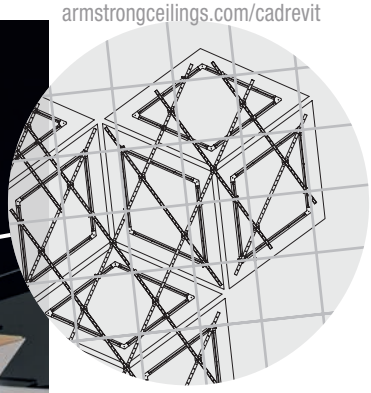

▲ SoundScapes® Shapes trapezoid, parallelogram, and triangle panels

plus capabilities to do more

armstrongceilings.com/capabilities
See more photos at:
armstrongceilings.com/photogallery

Deliver acoustics in playful installations with angles, layers, shapes, sizes, and colors using our exclusive grouping frame kit to ensure alignment.

KEY SELECTION ATTRIBUTES

- new Now available in triangle, trapezoid, and parallelogram shapes
- 360º panel finishing capability available
- Aesthetically define spaces with excellent acoustical performance-up to 1.18 Sabins/SF
- High light reflectance for White panels – 0.90
- Quick to install from the deck, drywall, suspension system, or on a wall in adjustable heights and angles
- Excellent panel construction and innovative, pre-engineered grouping frames take the thinking and risk out of installation
- Grouping Frame Kit provides superior rigidity, perfect alignment, minimizes hanging points, ensures consistent panel spacing, and is engineered for use in DEF Seismic zones
- new Select products included in the FAST134 program – ready to ship in 4 weeks or less
- Adjustable to various heights and angles

COLORS

Due to printing limitations, shade may vary from actual product.

White (WH)	Shell (SH)	Pale Lemon (LM)	Pecan (PC)	Sky (SK)	Moss (MS)	Stone (SE)	Reef (RE)	Lagoon (LA)	Plum (PM)	Cranberry (CN)	Kiwi (KW)	Tangerine (TG)	Black (BK)	Custom Colors Available

TechLine 877 276-7876
armstrongceilings.com/soundscapesshapes

Armstrong®
CEILING & WALL SOLUTIONS

SOUNDSCAPES® Shapes

Acoustical Clouds

fine texture

LEED® WELL™ LBC

UP TO 51% RECYCLED CONTENT

Calculate sustainability with GreenGenie™ armstrongceilings.com/greengenie

energy management	construction waste mgmt	regional materials	design for flexibility	EPD	recyclable/ extended producer resp.	biobased materials	recycled content	sourcing of raw materials	material ingredient reporting	low emitting/ materials	lighting quality	acoustics
✓		✓	✓				✓				✓	✓

LOCATION DEPENDENT

WHITE ONLY

PANEL OPTIONS – 90 DEGREES (shown in finish view from below ceiling)

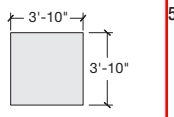

Item No.◆	Description
5440_ _	Square – 7/8" thick panel

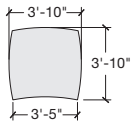

Item No.◆	Description
5441_ _	Convex – 7/8" thick panel

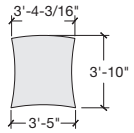

Item No.◆	Description
5442_ _	Concave – 7/8" thick panel

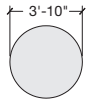

Item No.◆	Description
5443_ _	Circle – 7/8" thick panel

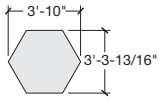

Item No.◆	Description
5444_ _	Hexagon – 7/8" thick panel

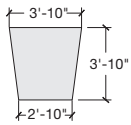

Item No.◆	Description
5445_ _	Trapezoid – 7/8" thick panel

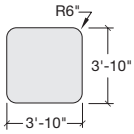

Item No.◆	Description
5635_ _	Square 6" Radius cut Corner

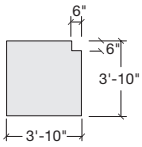

Item No.◆	Description
5636_ _	Square 6" Square cut Corner 7/8" thick panel

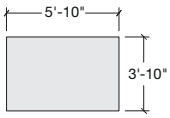

Item No.◆	Description
5448_ _	Small Rectangle – 7/8" thick panel

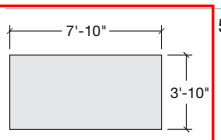

Item No.◆	Description
5449_ _	Large Rectangle – 7/8" thick panel

FAST 4 WEEKS or Less

FAST134 program items ready to ship from manufacturer in 4 weeks or less.
Up-to-date lead times and product options (sizes and colors) at armstrongceilings.com/fast134.

◆ NOTE: Add 2-letter color suffix when specifying or ordering (e.g. 5440 W H for square panel in White).
Concealed hardware with 360° finishing available on all shapes except Hexagon.
When grouping 90-degree shapes with the 5453D090 Frame Alignment Kit, you cannot combine with 60-degree shapes.

new PANEL OPTIONS – 60 DEGREES (shown in finish view from below ceiling)

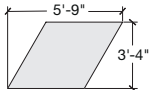

Item No.◆	Description
7101P01_ _	Parallelogram – 7/8" thick panel

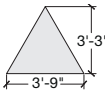

Item No.◆	Description
7101T01_ _	Triangle – 7/8" thick panel

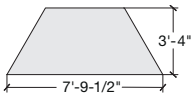

Item No.◆	Description
7101Z01_ _	Trapezoid – 7/8" thick panel

◆ NOTE: Add 2-letter color suffix when specifying or ordering (e.g. 7101P01 W H for square panel in White).

When grouping 60-degree shapes with the 5453D060 Frame Alignment Kit, you cannot combine with 90-degree shapes.

CUSTOM SHAPES

Create your own shapes!

For assistance, call TechLine at 1 877 276-7876.

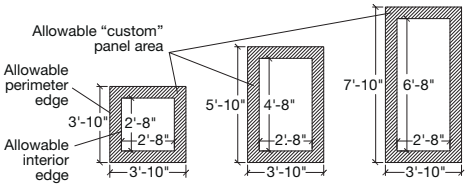

DESIGN IDEAS

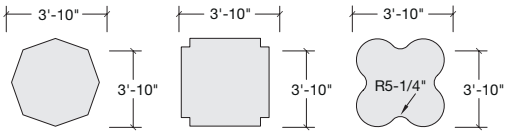

Item 5692 Item 5693 Item 5694

CLOUDS & CANOPIES – Standard

SOUNDSCAPES® Shapes

Acoustical Clouds
fine texture

HUNDREDS OF WAYS TO CONFIGURE SOUNDSCAPES® SHAPES PANELS

Individual Suspension

Three Items 5443 in White

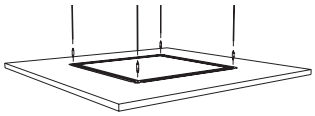

Individual Attachment to
Drywall or Solid Surface

Two Items 5440 and 5448 in Tangerine
(upper wall and ceiling)

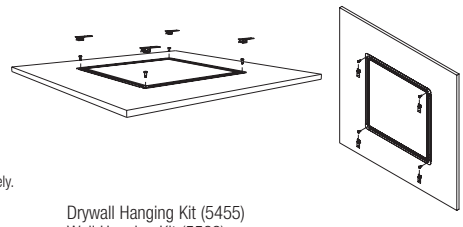

Group Suspension

Items 5441 and 5442 in White

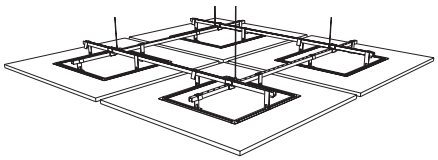

ACCESSORY KITS

All accessory kits are ordered separately.

Deck Hanging Kit (5450)

Drywall Hanging Kit (5455)
Wall Hanging Kit (5588)

Deck Hanging Kit (5450)
Grouping Frames Kit (5451 _ _)
Frame Alignment Kit (5453D090)
Panel Hook Kit (545 _ _)

PHYSICAL DATA

Material
7/8" thick fiberglass with DuraBrite® scrim on face and sides or custom 1-3/4" thick fiberglass with DuraBrite scrim on all sides (360º finishing). To order custom panels, contact TechLine at 1 877 276-7876.

Surface Finish
DuraBrite scrim with factory-applied paint on face and sides. Standard White has energy-saving, high light-reflective finish (LR 0.90). Back of panel is unfinished with embedded metal extrusions.

Fire Performance
SoundScapes® Shapes panel material is ASTM E84 Class A: Flame Spread 25 or under and Smoke Developed 50 or less.

CAN/ULC S102 surface burning characteristics. Flame Spread Rating 25 or less. Smoke Developed Classification 50 or less.

SoundScapes Shapes acoustical clouds, as with other architectural features located in the ceiling plane, may obstruct or skew the existing or planned fire sprinkler water distribution pattern, or possibly delay the activation of the fire sprinkler or fire detection system. Consult a fire protection engineer, NFPA 13, and local codes for guidance on the proper installation techniques where fire detection or suppression systems are present.

ASTM E1264 Classification
Type XII, Form 2, Pattern E

High Recycled Content
Contains greater than 50% total recycled content. Total recycled content based on product composition of post-consumer and pre-consumer (post-industrial) recycled content per FTC
guidelines.

Acoustical Performance
Standard Shapes – 1.18 Sabins/SF; 360°
Finished Shapes – 1.47 Sabins/SF; color shapes have slightly reduced acoustical performance.

Design Considerations
SoundScapes Shapes acoustical clouds maintain a natural sag that may be noticeable when installed 6" or less apart. Deflection up to 1/8" has been documented in some cases.

SoundScapes Shapes available with 360º finishing for use in areas where panel back is exposed (can only be installed with included individual suspension).

Special care in installation and handling must be taken with color shapes to avoid surface damage to the paint finish. Custom colors are available.

Custom shapes are available by providing a custom shape drawing within guidelines and sending to TechLine. Call 1 877 276-7876 for assistance.

Seismic Restraint
Refer to ASCE 7-10, Section 13.5 Architectural Components for seismic requirements. Section 13.5, Item 2 refers to 13.2.3 Consequential Damage.

Suspension Systems
SoundScapes Shapes acoustical clouds are pre-assembled with metal extrusions in the back of the panels. Standard accessory kits facilitate quick and easy installation from the deck, through a ceiling, or directly attached to drywall. See Installation Instructions BPLA-297302 for installation details.

FAST134 Program Considerations
Size of Job Matters: Big jobs, over 2500 SF or 50 pieces for shapes/vertical elements will have longer lead times.

Location Matters: Transit time not included. We are ready to ship in 1 week on FAST1 items. However, transit to the states west of Wyoming may add time.

Distributor Truck Schedule Matters: We rely on distribution to help move products around the country. When speed matters, work with your local distributor to ensure FAST134 service.

Stock vs Made-to-Order Matters: FAST3 & FAST4 items are made-to-order and will ship direct to distributor. FAST1 (stocked items) will go through distribution and depend on distributor truck schedules.

Warranty
Details at armstrongceilings.com/warranty

Panel Weight
90-Degree Shapes: 0.63 lbs/SF
7101P01: 11.1 lbs/pc
7101T01: 5.6 lbs/pc
7101Z01: 16.4 lbs/pc

TechLine / 1 877 276-7876
armstrongceilings.com/soundscapesshapes

BPCS-4543-721

LEED® is a registered trademark of the U.S. Green Building Council; Living Building Challenge® (LBC) is a trademark of the International Living Future Institute®; WELL™ and WELL Building Standard are trademarks of the International WELL Building Institute; all other trademarks used herein are the property of AWI Licensing LLC and/or its affiliates © 2021 AWI Licensing LLC

Armstrong®
CEILING & WALL SOLUTIONS

ACOUSTIBuilt®

Seamless Acoustical Ceiling and Wall System
fine texture

TOTAL ACOUSTICS®
Sound Absorption (NRC) + Sound Blocking (CAC)

SUSTAIN®
High Performance Sustainable Ceiling Systems (white only)

24/7 DEFEND™
Solutions for Healthier, Safer Spaces
CONTAIN CLEAN PROTECT

ACP4

▲ ACOUSTIBuilt® Seamless Acoustical Ceiling System

CAD/Revit® drawings at:
armstrongceilings.com/cadrevit

plus capabilities to do more

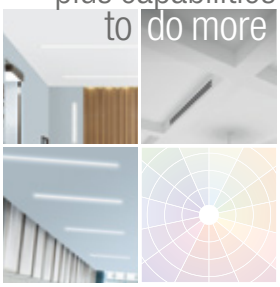

armstrongceilings.com/capabilities
See more photos at:
armstrongceilings.com/photogallery

New seamless acoustical ceiling and wall system that looks like drywall, but offers Total Acoustics® performance.

KEY SELECTION ATTRIBUTES

- new Look of drywall in a seamless acoustical ceiling and wall system (install on walls above 7 feet to prevent damage)
- Get total noise control and floor plan versatility with Total Acoustics® ceiling panel options: NRC + CAC = Total Acoustics performance
- Finished White ACOUSTIBuilt® panels are part of the Sustain® portfolio and meet the most stringent industry sustainability compliance standards today
- Smooth non-directional, monolithic, drywall-like visual
- Add a hint of color, tailored to your design palette

- new Use Drywall Grid SimpleSoffit™ framing system for faster, easier soffit construction
- Install on Armstrong® Drywall Grid Systems, in any room, any size, flat, or sloped
- Similar installation and finishing methods to drywall ceilings
- new CleanAssure™ family of products – includes disinfectable panels, suspension systems, and trim
- Mold and mildew-resistant surface
- ACOUSTIBuilt® is intended for spaces desiring a Level 4 equivalent drywall finish

- Easier to install than acoustical plaster at a lower cost
- Can be installed with most drywall-compatible light fixtures including those from our partners:
  - Axis - XAL
  - USAI - Price
- new Improves STC of interior stud/drywall partition systems by up to 6 points

TYPICAL APPLICATIONS

- Offices
- Lobbies
- Education
- Exposed Structure
- Retail
- Hospitality
- Cloud Applications

FINE TEXTURE FINISH FOR ACOUSTIBuilt® PANELS

White
(WH)

COLOR TINTS OF YOUR CHOICE

Available in any light color tone!

NOTE: Custom color tints should have an LRV (Light Reflectance Value) of 70 or greater. Custom ACOUSTIBuilt® fine texture finish colors will appear 1 to 2 shades darker than a standard paint color sample when applied due to the texture in the finish.

TechLine 877 276-7876
armstrongceilings.com/acoustibuilt

Armstrong®
CEILING & WALL SOLUTIONS

ACOUSTIBuilt®

Seamless Acoustical Ceiling and Wall System

fine texture

USDA CERTIFIED BIOBASED PRODUCT PRODUCT 98%

Declare.

SUSTAIN® High Performance Sustainable Ceiling Systems (white only)

GREENGUARD Gold Certified (details below)

LEED® WELL™ LBC

UP TO 75% RECYCLED CONTENT

Calculate sustainability with GreenGenie™ armstrongceilings.com/greengenie

energy management · construction waste mgmt · regional materials · design for flexibility · EPD · recyclable/ extended producer resp. · biobased materials · recycled content · sourcing of raw materials · material ingredient reporting · low emitting/ materials · lighting quality · acoustics

LOCATION DEPENDENT

VISUAL SELECTION

PERFORMANCE SELECTION

Dots represent high level of performance (panel and grid).

	Item No.	Dimensions (Inches)	UL Classified Acoustics NRC	UL Classified Acoustics CAC	Total Acoustics[1] NRC+CAC	Fire Performance	Light Reflect	Bio-Block Anti-Mold/ Mildew	Humi-Guard+ Sag Resistant	Certified Low VOC Emissions	CleanAssure™ Disinfectable Panels Fog	Spray	DURABILITY Wash	Scratch	Soil	Recycle Program	10-Yr Warranty
ACOUSTIBuilt® CEILING AND WALL PANELS	**2604**	48 x 72 x 7/8"	0.80* •	46 •	BEST	Class A	0.87**	•	•	•	•	•	N/A	N/A	N/A	N/A	•

7/8" Tapered Edge on 4 Sides

[1] Total Acoustics® ceiling panels have an ideal combination of sound absorption and sound-blocking in one product.
* Per ASTM C423 & E795, E-400 Mounting.
** White Fine Texture Finish panel performance following the installation instructions.

WALL-TO-WALL ASSEMBLY AND INSTALLATION OVERVIEW

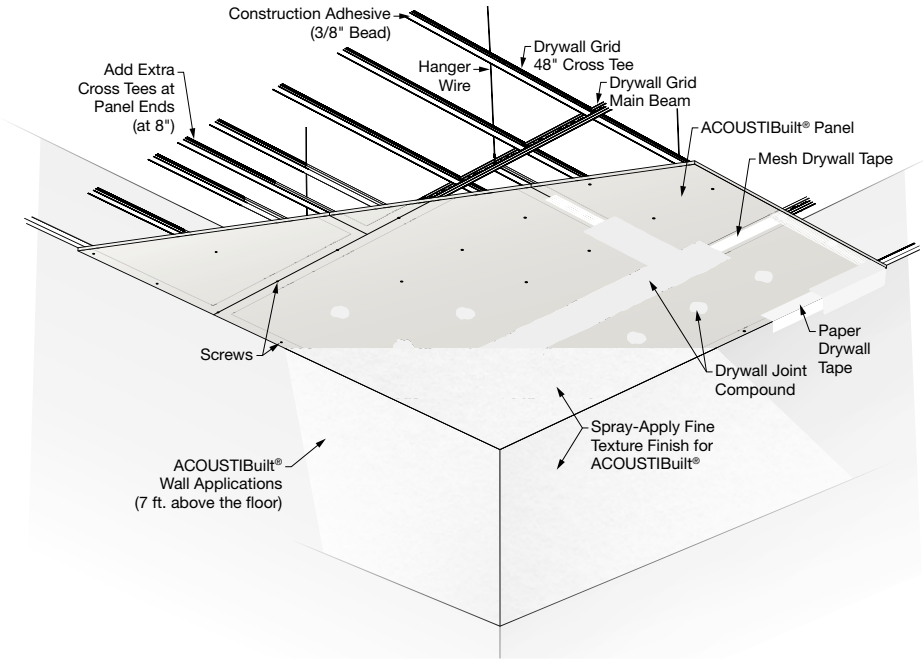

ACOUSTICAL INFORMATION

Mounting Method

	Sabins/SF
Cloud	0.80
Cloud w/ infill 8200T10	1.33

STC Rating***

1 Side	2 Sides
0.42 •	0.43 •

*** 3-5/8" metal studs with one layer of 5/8" drywall on both sides and ACOUSTIBuilt Panels on one or both sides.

PHYSICAL DATA

Material
Wet-formed mineral fiber.

Fire Performance
Class A: ASTM E84 and CAN/ULC S102 surface burning characteristics. Flame Spread of 25 or less. Smoke Developed of 50 or less.

ASTM E1264 Classification
Type IV, Form 2, Pattern G
Fire Class A

Humidity/Sag Resistance
HumiGuard® Plus ceiling panels are recommended for areas subject to high humidity, up to, but not including, standing water and outdoor applications.

Anti-Mold/Mildew
Ceiling tiles with White Fine Texture Finish offer BioBlock® performance and resist the growth of mold and mildew on the tile surface.

High Recycled Content
Contains greater than 50% total recycled content. Total recycled content based on product composition of post-consumer and pre-consumer (post-industrial) recycled content per FTC guidelines.

VOC Emissions
GREENGUARD Gold Certified
Third-party certified compliant with California Department of Public Health CDPH/EHLB/Standard Method Version 1.2, 2017. This standard is the guideline for low emissions in LEED®, WELL Building Standard™, Living Building Challenge® (LBC), CalGreen Title 24, ANSI/ASHRAE/USGBC/IES Standard 189; ANSI/GBI Green Building Assessment Protocol.

PRODUCT CERTIFIED FOR LOW CHEMICAL EMISSIONS UL.COM/GG UL 2818

GREENGUARD GOLD

Design and Lighting Considerations
ACOUSTIBuilt® panels are intended for spaces desiring a Level 4 equivalent drywall finish. Critical lighting conditions such as grazing or side light are important to consider while specifying as they can accentuate any imperfections or visible joints.

Lighting and diffuser fixtures must be able to accommodate 7/8" thick panels. Contact the lighting and diffuser manufacturers for recommended fixture use and integration. ACOUSTIBuilt® is a non-accessible ceiling. Access panels can be integrated, as needed, following standard installation practices. Refer to access panel manufacturer to verify compatibility with 7/8" thick panels.

Acoustical Considerations
When installed as a cloud, average sound absorption is 0.80 Sabins/SF. The addition of acoustical infill panel item 8200T10 can increase sound absorption up to 1.33 Sabins/SF. Excessive integrations and/or small enclosed spaces where the ceiling is more compound than open area will result in degradation of sound absorption. Certain lighting conditions and/or colors may require an additional coat of Fine Texture Finish, resulting in a degradation of sound absorption. ACOUSTIBuilt® panels absorb the most sound when installed as full panels. Plan the layout to minimize panel joints and fixture integrations which cover the surface of the ceiling.

Insulation Value
R Factor – 2.2 (BTU Units)
R Factor – 0.39 (Watts Units)

Cleaning and Disinfecting
Cleaning and CDC recommended disinfecting options available on armstrongceilings.com/cleaning

10-Year Panel Warranty
Details at armstrongceilings.com/acoustibuilt

Weight; Square Feet/Carton
2604 – 1.1lbs/SF; 240 SF/ctn

Minimum Order Quantity
1 carton (10pcs)

TechLine 877 276-7876
armstrongceilings.com/acoustibuilt

Armstrong® CEILING & WALL SOLUTIONS

ACOUSTIBuilt®

Seamless Acoustical Ceiling and Wall System
fine texture

USDA CERTIFIED BIOBASED PRODUCT
PRODUCT 98%

Declare.

SUSTAIN®
High Performance Sustainable Ceiling Systems (white only)

GREENGUARD Gold Certified
(details below)

LEED® | WELL™ | LBC

UP TO 75% RECYCLED CONTENT

Calculate sustainability with GreenGenie™
armstrongceilings.com/greengenie

energy management	construction waste mgmt	regional materials	design for flexibility	EPD	recyclable/ extended producer resp.	biobased materials	recycled content	sourcing of raw materials	material ingredient reporting	low emitting/ materials	lighting quality	acoustics
✔	✔	✔	✔	✔		✔	✔	✔	✔	✔	✔	✔

▲ LOCATION DEPENDENT

SUSPENSION SYSTEMS – Order Separately

Item No.	Description	Required for Install	Qty/Ctn
HD8906	12' HD Drywall Main Beam	Yes	12/144
XL8945P	4' Drywall Cross Tee	Based on layout	36/144
KAM21020	2 x 2 x 120" Knurled Angle Molding (0.033" metal thickness)	Based on layout	10/100
new **SSLU2424**	SimpleSoffit™ L Soffit Upturn 6-1/2 x 1-3/4 X 48-1/2"	N/A	12/48
7891	12-gauge hanger wires 144" length	N/A	140 pcs

PERIMETER TRIM OPTIONS – Order Separately

Item No.	Description	Required for Install
AX1PC_STR **AX1PC_CUR**	Axiom® One-Piece Drywall Trim available for 4" and 6" heights – straight or curved	Based on layout
Axiom Classic: **AX_STR** **AX_CUR** Axiom Bottom Trim: **AXBTASTR** **AXBTACUR**	Axiom Classic Trim available in 2" to 16" heights (2" increments – straight or curved) with Axiom Bottom Trim for ACOUSTIBuilt® See Axiom Data Page for clips and accessories needed to install Axiom trim shown above.	Based on layout Axiom Bottom Trim is required to use Axiom Classic and select Axiom Trims with ACOUSTIBuilt
Straight: **AXAKEACBSTR** Inside Corner: **AXAKEACBIC** Outside Corner: **AXAKEACBOC**	Axiom® Angled Knife Edge® Trim for ACOUSTIBuilt – Inside or Outside Corner	Based on layout
new **ARM625500STR**	1/2" Wall reveal from 7/8" ACOUSTIBuilt to 5/8" Drywall	Based on layout

ACOUSTIBuilt® FINE TEXTURE FINISH PAINT – Order Separately

Item No.	Description	Required for Install
2605WH	Fine Texture Finish for ACOUSTIBuilt® Panels (available in white and custom off-white tints)	For every 10 panels (240 SF) - order 1 pail (4 gal.) 200 SF on custom color applications

PLASTERFORM™ (GRG) ACCESS PANELS

Item No.	Description
PF-15030B	30" x 30" Rounded Corner Access Panel
PF-15024B	24" x 24" Rounded Corner Access Panel
PF-15018B	18" x 18" Rounded Corner Access Panel

See more Plasterform Access Panel options at: armstrongceilings.com/plasterform

STANDARD ACCESSORIES BY OTHERS – Order Separately

Item No.	Description	Required for Install
Screws	# 6 x 1-5/8" fine thread, corrosion resistant drywall screws # 6 x 1-5/8" coarse thread drywall screws (Used for Wall Installations)	Yes
Setting-Type Compound	Fast-setting compound (hot mud)	Yes
Adhesive (Required for all ceiling and wall installations.) Requires approx. seven 28 oz tubes of adhesive per 240 SF.	OSI® F38 Heavy Duty Drywall Adhesive or equivalent	Yes
Drying-Type Compound	Ready-mixed lightweight compound	Yes
Tape	Self-adhesive mesh drywall joint tape (for panel joints)	Yes
Paper Tape	Paper drywall tape (For Corners)	Yes

ACOUSTIBuilt® CEILING AND WALL SYSTEM

TechLine 877 276-7876
armstrongceilings.com/acoustibuilt

LEED® is a registered trademark of the U.S. Green Building Council; Declare® and Living Building Challenge® (LBC) are trademarks of the International Living Future Institute®; WELL™ is a trademark of the International WELL™ Building Institute; Grip-Plate® is a trademark of Rodenhouse, Inc.; UL and UL GreenGuard are a registered trademarks of UL LLC; Loctite® PL Premium® and OSI® F38 are registered trademarks of Henkel Corp.

Armstrong®
CEILING & WALL SOLUTIONS

SOUNDSCAPES® Blades

Linear Acoustical Panels
fine texture

Custom looks with standard products

ABC1

Custom SoundScapes® Blades, Rectangular in varying lengths and depths

CAD/Revit® drawings at:
armstrongceilings.com/cadrevit

Wall application

plus capabilities to do more

armstrongceilings.com/capabilities
See more photos at:
armstrongceilings.com/photogallery

Acoustical vertical panels reduce reverberation time in your space, now with three ways to install on ceilings and walls.

KEY SELECTION ATTRIBUTES

- Three installation options for maximum ceiling and wall design flexibility
  - From standard suspension system
  - From individual cable suspension
  - Direct-attach method using Axiom® Wall Molding
- Excellent sound absorption – 1.38 Sabins/SF
- 20 vertical panel sizes and shapes
- Mold- and mildew-resistant surface
- Linear, upscale visual
- Seismic-tested
- Integrated hardware
- Custom panel options available
- Add scrim to top edge as a premium option

COLORS

Due to printing limitations, shade may vary from actual product.

White (WH)	Shell (SH)	Pale Lemon (LM)	Pecan (PC)	Sky (SK)	Moss (MS)	Stone (SE)	Reef (RE)	Lagoon (LA)	Plum (PM)	Cranberry (CN)	Kiwi (KW)	Tangerine (TG)	Black (BK)	Custom Colors Available

For premium and custom capabilities, contact TechLine at 877 276-7876.

TechLine 877 276-7876
armstrongceilings.com/soundscapesblades

Armstrong®
CEILING & WALL SOLUTIONS

SOUNDSCAPES® Blades

Linear Acoustical Panels
fine texture

LEED® WELL™ LBC

71% RECYCLED CONTENT

Calculate sustainability with GreenGenie™
armstrongceilings.com/greengenie

energy management	construction waste mgmt	regional materials	design for flexibility	EPD	recyclable/ extended producer resp.	biobased materials	recycled content	sourcing of raw materials	material ingredient reporting	low emitting/ materials	lighting quality	acoustics
		✔	✔				✔				✔	✔

LOCATION DEPENDENT

LAYOUT OPTIONS

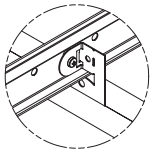

Install to Standard 15/16"
Suspension System

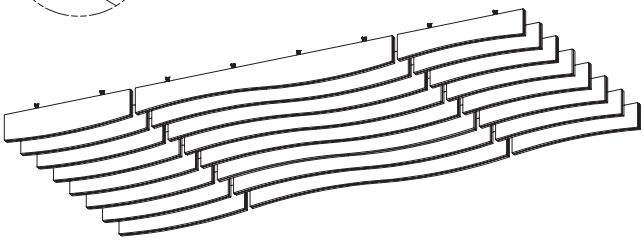

Vertical Panel 8' Wavelength Concave 7240 – 7.5 x 46 x 2"
Vertical Panel 8' Wavelength Convex 7241 – 10.5 x 46 x 2"
Vertical Panel 8' Wavelength Wave 7244 – 10.5 x 94 x 2"

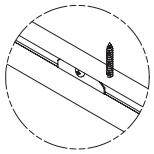

Direct-Attach Method using
Axiom® Wall Molding

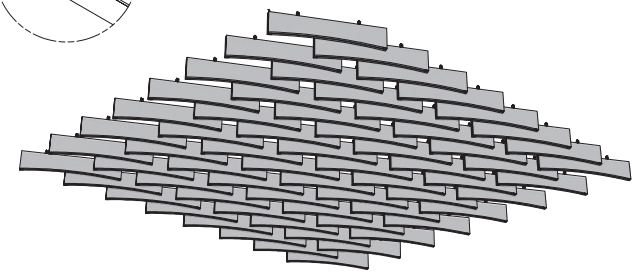

Vertical Panel 8' Wavelength Concave 7240 – 7.5 x 46 x 2"

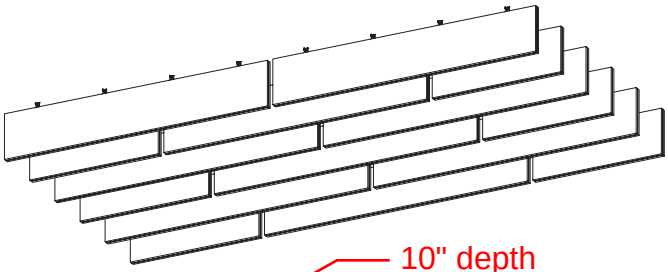

Vertical Panel Rectangular 7192 – 16 x 46 x 2"
Vertical Panel Rectangular 7193 – 16 x 94 x 2"

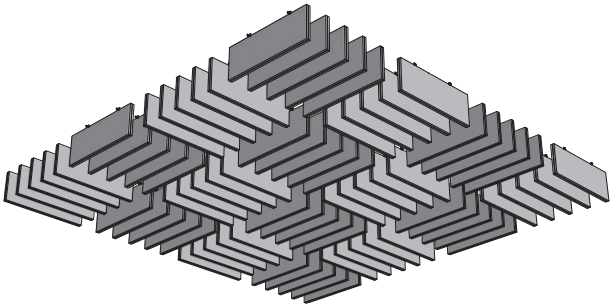

Vertical Panel Rectangular 7192 – 16 x 46 x 2"

10" depth

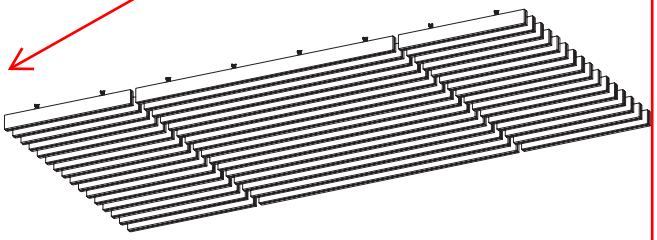

Vertical Panel Rectangular 7190 – 5 x 46 x 2"
Vertical Panel Rectangular 7191 – 5 x 94 x 2"

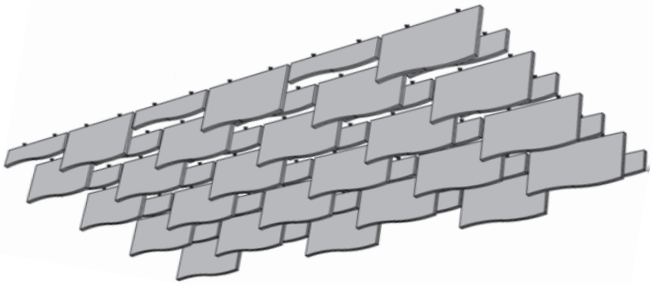

Vertical Panel 4' Wavelength Wave 7247 – 22 x 46 x 2"
Vertical Panel 4' Wavelength Wave 7246 – 10 x 46 x 2"

CUSTOM PANEL DESIGN EXAMPLES

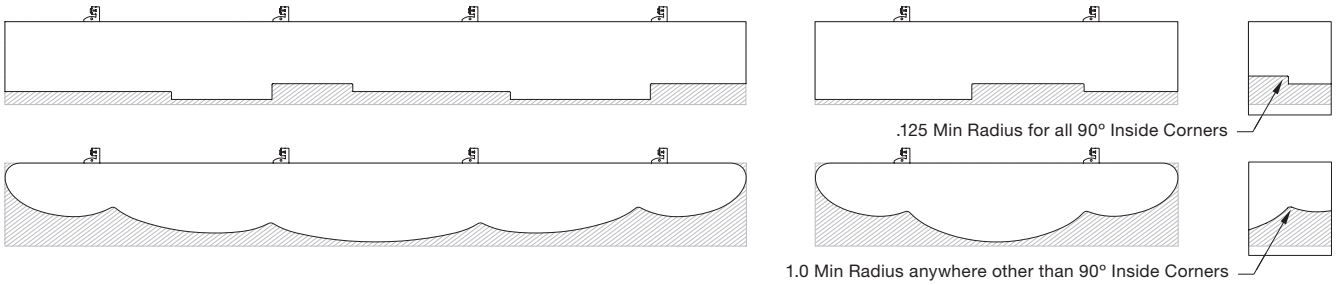

SOUNDSCAPES® Blades

Linear Acoustical Panels
fine texture

LEED® WELL™ LBC

71% RECYCLED CONTENT

Calculate sustainability with GreenGenie™ armstrongceilings.com/greengenie

energy management	construction waste mgmt	regional materials	design for flexibility	EPD	recyclable/ extended producer resp.	biobased materials	recycled content	sourcing of raw materials	material ingredient reporting	low emitting/ materials	lighting quality	acoustics
		✔	✔				✔				✔	✔

▲ LOCATION DEPENDENT

VISUAL SELECTION
Shown in elevation view

PERFORMANCE
Dots represent high level of performance.

	Item No.◆	Description	Dimensions (Inches)	Sound Absorption (Sabins/SF)	Light Reflect (White only)	Fire Rating	Anti-Mold/ Mildew (Bio-Block®)	Sag Resist (Humi-Guard+)	DURABILITY: Wash	Impact	Scratch	Soil
SOUNDSCAPES® Blades Vertical Panel Rectangular	7190_ _	Vertical panel Rectangular	5 x 46 x 2"	1.38	0.90 •	Class A	•	•	•	•	•	•
	7191_ _	Vertical panel Rectangular	5 x 94 x 2"	1.38	0.90 •	Class A	•	•	•	•	•	•
	3920_ _	Vertical panel	10 x 46 x 2"	1.38	0.90 •	Class A	•	•	•	•	•	•
	3921_ _	Vertical panel	10 x 94 x 2"	1.38	0.90 •	Class A	•	•	•	•	•	•
	7192_ _	Vertical panel Rectangular	16 x 46 x 2"	1.38	0.90 •	Class A	•	•	•	•	•	•
	7193_ _	Vertical panel Rectangular	16 x 94 x 2"	1.38	0.90 •	Class A	•	•	•	•	•	•
	3922_ _	Vertical panel	22 x 46 x 2"	1.38	0.90 •	Class A	•	•	•	•	•	•

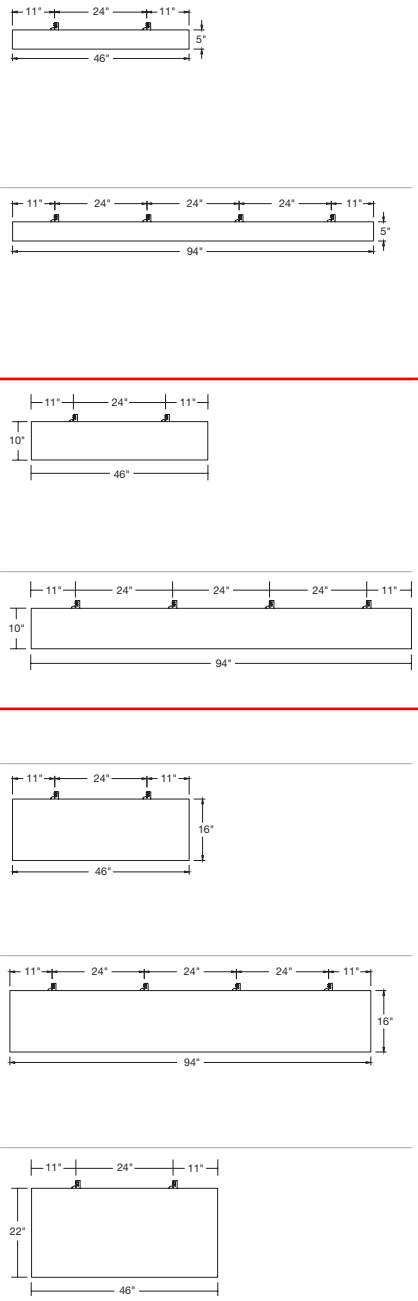

NOTE: Scrimmed top edges offered as "Premium." EXAMPLE: BPAS3920S6WH, where "S6" = scrimmed all sides.
◆ Add 2-letter color suffix to end of item number (e.g., 3920 W H = White)

BLADES – Standard

SOUNDSCAPES® Blades

Linear Acoustical Panels
fine texture

LEED® WELL™ LBC

71% RECYCLED CONTENT

Calculate sustainability with GreenGenie™ armstrongceilings.com/greengenie

energy management	construction waste mgmt	regional materials	design for flexibility	EPD	recyclable/ extended producer resp.	biobased materials	recycled content	sourcing of raw materials	material ingredient reporting	low emitting/ materials	lighting quality	acoustics
		✓	✓				✓				✓	✓

▲ LOCATION DEPENDENT

VISUAL SELECTION
Shown in elevation view

PERFORMANCE
Dots represent high level of performance.

	Item No.◆	Description	Dimensions (Inches)	Sound Absorption (Sabins/SF)	Light Reflect (White only)	Fire Rating	Anti-Mold/ Mildew (Bio-Block®)	Sag Resist (Humi-Guard+)	Wash (DURABILITY)	Impact	Scratch	Soil
SOUNDSCAPES® Blades Vertical Panel Wave	3923_ _	Vertical panel	22 x 94 x 2"	1.38	0.90 •	Class A	•	•	•	•	•	•
	7194_ _	Vertical panel Rectangular	28 x 46 x 2"	1.38	0.90 •	Class A	•	•	•	•	•	•
	7195_ _	Vertical panel Rectangular	28 x 94 x 2"	1.38	0.90 •	Class A	•	•	•	•	•	•
	7240_ _	Vertical panel 8' Wavelength Concave	7.5 x 46 x 2"	1.38	0.90 •	Class A	•	•	•	•	•	•
	7241_ _	Vertical panel 8' Wavelength Convex	10.5 x 46 x 2"	1.38	0.90 •	Class A	•	•	•	•	•	•
	7242_ _	Vertical panel 8' Wavelength Concave	19.5 x 46 x 2"	1.38	0.90 •	Class A	•	•	•	•	•	•
	7243_ _	Vertical panel 8' Wavelength Convex	22.5 x 46 x 2"	1.38	0.90 •	Class A	•	•	•	•	•	•

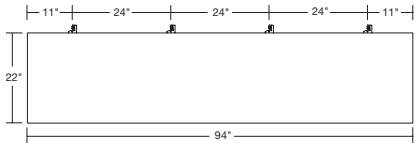

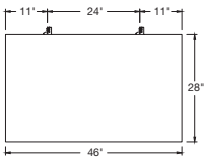

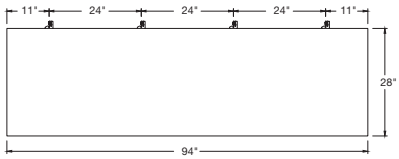

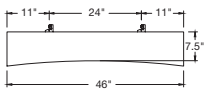

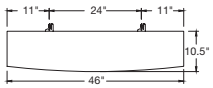

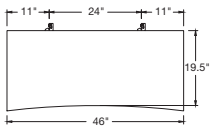

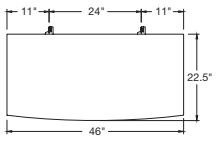

NOTE: Scrimmed top edges offered as "Premium." EXAMPLE: BPAS3920S6WH, where "S6" = scrimmed all sides.
◆ Add 2-letter color suffix to end of item number (e.g., 3920 W H = White)

SOUNDSCAPES® Blades

Linear Acoustical Panels
fine texture

LEED® WELL™ LBC

71% RECYCLED CONTENT

Calculate sustainability with GreenGenie™
armstrongceilings.com/greengenie

energy management	construction waste mgmt	regional materials	design for flexibility	EPD	recyclable/ extended producer resp.	biobased materials	recycled content	sourcing of raw materials	material ingredient reporting	low emitting/ materials	lighting quality	acoustics
		✔	✔				✔				✔	✔

▲ LOCATION DEPENDENT

THREE WAYS TO INSTALL

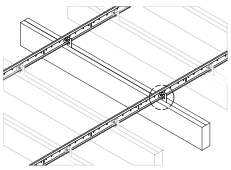

Attachment to Suspension System

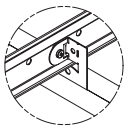

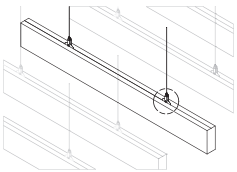

Individual Suspension using Hanging Kit

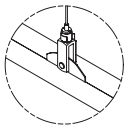

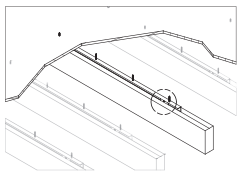

Direct-attach Method using Axiom® Wall Molding

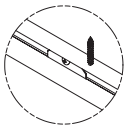

INSTALLATION OPTIONS

	Item No.◆	Description	Lin Ft/ Carton
PRELUDE® XL®	7301 _ _	HD Main Beam	240
	XL7341 _ _	48" Cross Tee	240
	XL8320 _ _	24" Cross Tee	120
	7800 _ _	7/8" Wall Angle	360
360º Painted Grid Suspension System	56418	144" HD Main Beam	240
	730136 _ _	Black (BL) and White (WH) colors only	240
	56421	48" Cross Tee	240
	XL734036 _ _	Black (BL) and White (WH) colors only	240
	56419	24" Cross Tee	120
	XL732036 _ _	Black (BL) and White (WH) colors only	120
	7800	7/8" Wall Angle	360
	780036 _ _	Black (BL) and White (WH) colors only	360

◆ When specifying or ordering items with a color, add the two-letter suffix to the end of the item number (e.g. 7301B L)

Prelude® XL®

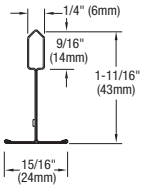

	Item No.◆	Description	Pieces/ Carton
Direct-Attach with AXIOM® Wall Molding	AXM34STR3 _ _	Straight Wall Molding – Shadow 10'	(360º Paint Recommended; order by the piece)
Individual Suspension Using Hanging Kit	BP6655	4-Point Hanging Kit	4 per bag
Accessories	ARBRKT	Adjustable Hanger Bracket	80
	QSUTC	Rigid Attachment Clip	150
	STAC	Single Tee Adapter Clip	120
	7121	Angled Hanging Kit (60° maximum angle)	2
	625530	Extended Hanging Aircraft Cables (30')	4

◆ When specifying or ordering items with a color, add the two-letter suffix to the end of the item number (e.g. 7301B L)

PHYSICAL DATA

Material
2" thick fiberglass with DuraBrite® scrim on face and sides.

Surface Finish
DuraBrite scrim with factory-applied paint on face and sides. Standard White has energy-saving, high light-reflective finish (LR 0.90). Top of panel is unfinished with embedded hanging clips.

Fire Performance
SoundScapes® Blades panel material is ASTM E84 Class A: Flame Spread 25 or under and Smoke Developed 50 or less.

CAN/ULC S102 surface burning characteristics. Flame Spread Rating 25 or less. Smoke Developed Classification 50 or less.

SoundScapes Blades panels, as with other architectural features located in the ceiling plane, may obstruct or skew the existing or planned fire sprinkler water distribution pattern, or possibly delay the activation of the fire sprinkler or fire detection system. Consult a fire protection engineer, NFPA 13, and local codes for guidance on the proper installation techniques where fire detection or suppression systems are present.

Anti-Mold/Mildew
Ceiling tiles with BioBlock® performance resist the growth of mold and mildew on the tile surface.

Design Considerations
SoundScapes Blades panels maintain a natural bow that may be noticeable when installed 2" or less apart. Deflection up to 1/8" has been documented in some cases.

Special care in installation and handling must be taken with color panels to avoid surface damage to the paint finish. Custom colors are available.

5" SoundScapes Blades can now be used on walls, but are not recommended for use in high-traffic or high-impact areas. For best results, install above 6' from floor level.

SoundScapes Blades panels can be ordered with scrim on top edge as a premium.

Seismic Restraint
SoundScapes Blades are approved for all seismic areas when installed per the seismic guidelines in the Armstrong Ceilings installation instructions.

Recommended Suspension Systems
SoundScapes Blades panels are pre-assembled with metal hanging clips in the top of the panels. See Installation Instructions BPLA-297844 for installation details.

Warranty
Details at armstrongceilings.com/warranty

Panel Weight
7190 – 1.6 lbs per panel
7191 – 3.3 lbs per panel
3920 – 3.2 lbs per panel
3921 – 6.5 lbs per panel
7192 – 5.1 lbs per panel
7193 – 10.4 lbs per panel
3922 – 7.0 lbs per panel
3923 – 14.4 lbs per panel
7194 – 8.9 lbs per panel
7195 – 18.3 lbs per panel
7240 – 2.9 lbs per panel
7241 – 3.5 lbs per panel
7242 – 6.7 lbs per panel
7243 – 7.2 lbs per panel
7244 – 5.9 lbs per panel
7245 – 13.7 lbs per panel
7246 – 3.2 lbs per panel
7247 – 7.0 lbs per panel
7248 – 6.5 lbs per panel
7249 – 14.4 lbs per panel

Panels/Carton
4

Minimum Order Quantity
1 carton

TechLine / 1 877 276-7876
armstrongceilings.com/soundscapesblades

BPCS-5094-1020

LEED® is a registered trademark of the U.S. Green Building Council; Living Building Challenge® (LBC) is a trademark of the International Living Future Institute®; WELL™ and Well Building Standard are trademarks of the International WELL Building Institute; all other trademarks used herein are the property of AWI Licensing LLC and/or its affiliates © 2020 AWI Licensing LLC

Armstrong®
CEILING & WALL SOLUTIONS

SOUNDSCAPES® Blades Linear Acoustical Panels

ABC1

Assembly and Installation Instructions – For Wall Installation, see Section 4.6

DO NOT REMOVE SOUNDSCAPES® BLADES PANELS FROM THE CARTON UNTIL YOU HAVE READ THESE INSTRUCTIONS IN THEIR ENTIRETY.

1. GENERAL

1.1 Product Description

SoundScapes® Blades panels are vertical, acoustical fiberglass panels designed to be suspended from a Prelude® XL® heavy-duty suspension system in groups, independently from cables/wires, or independently directly attached to a ceiling or wall structure.

Additionally, SoundScapes Blades 5" panels (items 7190 and 7191) can be installed on walls. See Section 4.6 for more details.

SoundScapes Blades panels are engineered for use in seismic areas only when indicated components are used and installed in accordance with these installation instructions.

SoundScapes Blades panels are made from fiberglass and finished on all edges and surfaces (except for the top edge) with a DuraBrite® acoustically transparent membrane.

SoundScapes Blades panels are available in 20 different shapes and sizes, including rectangular panels as well as wavelength panels that have curved edges. See data page for dimensions of each panel. Additionally, custom shape panels can be ordered through the Architectural Specialties group.

There are 14 standard color options for the finished Blades panels. Premium and custom finishes can also be manufactured. Contact TechLine customer support, Architectural Specialties, or an Armstrong representative for additional information. Field painting will void the product warranty.

For minor surface and edge scratches on white Blades panels, use Armstrong® SuperCoat™ touch-up paint, item #5761. This paint provides an excellent one-coat edge treatment that will match the original vertical panel. For minor surface and edge scuffing or scratches on colored Blades panels, use matching Sherwin-Williams® paint that can be ordered through the Armstrong Sample Center or purchased from your local Sherwin-Williams store. For standard colorations panels, touch-up paint is available for purchase at Sherwin-Williams using the following reference:

Paint Type: Sherwin-Williams Pro Mar 200 Zero VOC – Flat			
Armstrong Color SKU	**Armstrong Color Name**	**Sherwin-Williams Color #**	**Sherwin-Williams Color Name**
2824SH	Shell	SW7537	Irish Crème
2824LM	Pale Lemon	SW7561	Lemon Meringue
2824PC	Pecan	SW7518	Beach House
2824SK	Sky	SW7613	Aqua Sphere
2824MS	Moss	SW7727	Koi Pond
2824SE	Stone	SW7642	Pavestone
2824RE	Reef	SW6945	Belize
2824LA	Lagoon	SW6955	Impromptu
2824PM	Plum	SW6286	Natural Grape
2824CN	Cranberry	SW6594	Poinsettia
2824KW	Kiwi	SW6712	Luan Green
2824TG	Tangerine	SW6886	Invigorate
2824BK	Black	SW6990	Caviar

Armstrong®
CEILING & WALL SOLUTIONS

1.2 Storage and Handling

SoundScapes® Blades panels shall be stored in a dry interior location and shall remain in their original cartons prior to installation to avoid damage. The cartons shall be stored in a flat, horizontal position. The vertical panels should not be removed from the carton until the suspension system is installed. Proper care should be taken when handling Blades panels to avoid damage and soiling. White cotton or latex gloves are recommended for handling. It is recommended that two installers handle 94" Blades panels.

NOTE: Blades panels in colors other than white are paper wrapped. To avoid fingerprints, do not remove paper wrapping until installation is complete.

1.3 Site Conditions

SoundScapes Blades panels can be installed where the temperature is between 40°F (4°C) and 120°F (49°C). Panels cannot be used in exterior applications, where standing water is present, or where moisture will come in direct contact with the Blades panel.

1.4 SoundScapes Blades Panel Layout

SoundScapes Blades acoustic panels are available in a variety of lengths and shapes and are able to be attached to a Prelude® suspension system in groups or individually suspended using the 6655 hanging kit or Axiom® molding, as described in Section 4. Please note that panels require a minimum of 2" gap between ends of panels for best visual due to potential bowing up to 1/8".

1.5 Fire Performance

SoundScapes Blades panels may obstruct or skew the existing or planned fire sprinkler water distribution pattern or possibly delay the activation of the fire sprinkler or fire detection system. Designers and installers are advised to consult a fire protection engineer, NFPA 13, and their local codes for guidance on the proper installation techniques where fire detection or suppression systems are present.

1.6 Safety Considerations – Working with Fiberglass and Mineral Fiber Products

General Construction Site Safety Information: Precautions should be taken to ensure that handling and installation procedures are taken to minimize dust generation. It is recommended that the work site is well ventilated. If high dust levels are anticipated during installation, use an appropriate NIOSH designated dust respirator. Safety glasses and gloves are recommended during installation.

First Aid Measures: If contact occurs, flush eyes and/or skin with water for at least 15 minutes and remove contaminated clothing. Wash work clothes with warm water and mild soap. Refer to Armstrong World Industries SDS (which includes information on established occupational exposure limits), available at armstrongceilings.com/commercial.

1.7 Warranty

The SoundScapes Blades system has been tested based on the installation method described in this document. Warranty will be voided if you do not follow these instructions and guidelines.

1.8 HVAC Design & Operation and Temperature & Humidity Control

Proper design for both air supply and return air, maintenance of the HVAC filters, and building interior space are essential to minimize soiling. Before starting the HVAC system, make sure the supply air is properly filtered and the building interior is free of construction dust. SoundScapes Blades are for interior use only and cannot be used where standing water is present or where moisture will come in direct contact with the ceiling.

1.9 Plenum

SoundScapes Blades panels allow downward accessibility to the plenum. Blades panels can be unattached and re-attached to grid or cable hanging kits.

Blades panels are installed below the suspension system, and do not need to travel above the suspension system during installation.

Installations with grid require a minimum of 3" of space in the plenum to install the hanger wires for the suspension system.

NOTE: Light fixtures and air handling systems require more space and will determine the minimum plenum height for the installation.

1.10 Cleaning

Dust and loose dirt may easily be removed by brushing or with a vacuum cleaner. Vacuum cleaner brush attachments such as those designed for cleaning upholstery or walls do the best job. Be certain to clean in one direction only. This will prevent rubbing dust into the surface of the ceiling. Use a clean, dry, soft, white cloth to wipe off any dirt or greasy fingerprints. If this does not clean the panel, use a damp, clean, soft, white cloth or sponge with a mild detergent to wipe the panel. Remove any remaining moisture with a dry cloth.

For minor surface and edge scratches on white Blades panels, use Armstrong® SuperCoat™ Touch-up Paint item #5761. This paint provides an excellent one-coat edge treatment that will match the original vertical panel.

For minor surface and edge scuffing, or scratches on colored Blades panels, use matching Sherwin-Williams® paint that can be ordered through the Armstrong Sample Center, or purchased from your local Sherwin-Williams store.

2. DESIGN AND INSTALLATION CONSIDERATIONS

2.1 Directionality

Ceilings

The surface of SoundScapes® Blades is a non-directional, slightly textured surface. Overall installation designs are non-directional with differences based on installation method. Blades panels installed using Prelude® suspension system will be limited to panels running parallel or 90 degrees to the main beams.

However, SoundScapes Blades panels installed with the item 6655 hanging kit or with Axiom® molding can be installed in any direction, allowing for complete freedom in designs. See installation Section 4 for further details.

Walls

For guidelines and instructions on wall installations, see Section 4.6.

2.2 Sprinklers

SoundScapes Blades panels may obstruct or skew the existing or planned fire sprinkler water distribution pattern, or possibly delay the activation of the fire sprinkler or fire detection system. Designers and installers are advised to consult a fire protection engineer, NFPA 13, and their local codes for guidance on the proper installation techniques where fire detection or suppression systems are present.

The minimum drop of the SoundScapes Blades panels will be 6" drop from the plenum when using the 5" panel with the direct-attach method (AXM34STR3XX). Alternate product sizes and installation methods can have greatly varying drops.

2.3 Plenum

SoundScapes Blades panels allow downward accessibility to the plenum. Blades panels can be unattached and re-attached to grid or cable hanging kits.

Blades panels are installed below the suspension system, and do not need to travel above the suspension system during installation.

Installations with grid require a minimum of 3" of space in the plenum to install the hanger wires for the suspension system.

NOTE: Light fixtures and air handling systems require more space and will determine the minimum plenum height for the installation.

2.4 Approximate System Weight and Attachment to Deck/Wall

Overall system weight will be based on the weight of the Blades panels and installation method.

SoundScapes Blades panels have an approximate weight of 1.0 lbs/SF. Based on your layout and the panels used, you will need to calculate lbs/SF for the installation method. See table on page 1 for weight per panel.

Ceiling Hanger Connections: Hanger connections to the ceiling structure must follow the fastener manufacturer's instructions and referenced code based on system weight and structure into which the suspension system will be fastened. Average system weight per square foot will depend on the design layout and must be calculated by installer.

Wall Connections: For guidelines and instructions on wall installations, see Section 4.6.

Correct mechanical fasteners must be used to install Axiom® molding and SoundScapes® Blades panels directly to a wall. It is advised that connections be screwed directly to wall studs. When this is not possible, contractor must select appropriate anchors for the wall substrate as well as the weight of the system.

2.5 Accessibility

SoundScapes Blades systems are vertically mounted panels. While installed, accessibly will be limited to reaching through panels to suspension system or plenum/ceiling deck. Alternatively, Blades panels can be removed. Blades panels installed in grid rout holes can be lifted up and pulled free. Blades panels installed with screws can be unscrewed and replaced, as necessary. See installation Section 7 for further details on panel attachments to grid.

2.6 Cutting Blades Panels

SoundScapes Blades panels cannot be field cut. Contact Architectural Specialties for custom length Blades panels.

2.7 Blades Panel Layout

Minimum spacing between Blades panels depends on the installation method.

- Independent Suspension with Hanging Kits – 12" O.C.
- Attached to Grid – 6" O.C.
- Directly Attached to Axiom Molding – 6" O.C.

3. ACCESSORIES

The installation hardware for SoundScapes® Blades panels is already included in the panel and can be used with multiple suspension options.

Four-point Hanging Kit (item 6655)
SoundScapes Blades panels can be independently suspended using aircraft cables and quick release, fork gripper adjusters. The item 6655 hanging kit includes: (4) 96" long cables with stops, (4) fork gripper adjusters, and (4) top end connectors. See installation Section 4.2 for further details. ***(Fig 1)***

Axiom® Molding (item AXM34STR3XX) for Direct Attach to Walls or Ceilings
SoundScapes Blades panels can be independently installed direct to a ceiling or wall surface using Axiom molding. Molding will be mostly hidden behind the Blades vertical panel, and will assist with alignment of the installation. The 360 degree painted finish ensures that the molding will be less visible upon final installation. Molding is 120" and is sold by the piece. See installation Sections 4.5 and 4.6 for further details. ***(Fig 2)***

4. SUSPENSION SYSTEM

The requirements listed here represent the manufacturer's minimum acceptable installation recommendations, and may be subject to additional requirements established by the local authority having jurisdiction.

- All installations should follow ASTM C636.
- All references to suspension component duty ratings are per ASTM C636.
- The suspension system chosen must be fastened to the structure per code in your area.

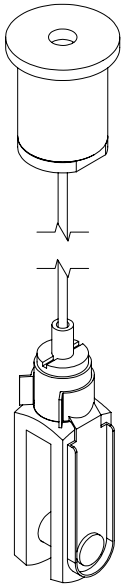

(Fig 1)

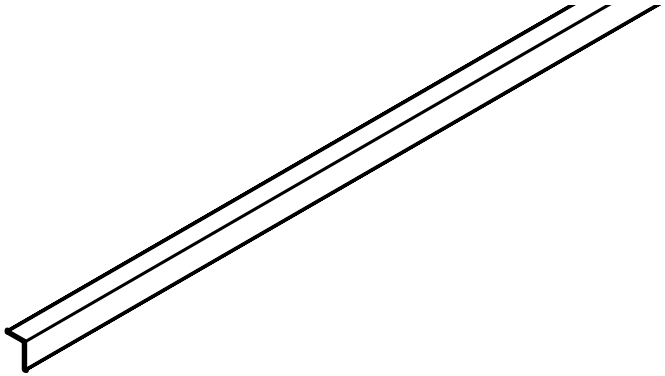

(Fig 2)

4.1 Suspension Options

There are four different types of suspension options for use with SoundScapes® Blades panels. These methods are:

- Independently suspended from structure with the item 6655 4-point hanging kit
- On a heavy-duty Prelude® XL® 15/16" suspension system in a standard 2' x 2' layout
- On a heavy-duty Prelude XL 15/16" suspension system in a “Rail” layout attached to deck by Rigid Attachment Clip (item # 6459BL) or Adjustable Hanger Bracket (ARBRKT)
- Attached to Axiom® molding which is directly attached to structure in order to minimize the distance from the ceiling deck to the Blades. This attachment method can also be used for wall installations. See Sections 4.5 and 4.6 for further details on this installation method.

Each vertical panel has embedded attachment clips along the top of each panel. ***(Fig 3)***

NOTE: All 4' and 8' panels share hardware spacing.

4.2 Independent Suspension with Hanging Kit

SoundScapes Blades panels can be independently suspended using aircraft cables and quick release fork gripper adjusters. ***(Fig 4)*** The item 6655 hanging kit includes:

(4) 96" long cables with stops,

(4) fork gripper adjusters, and

(4) gripper structure anchors.

NOTE: For layout considerations in a seismic installation, refer to Section 9.0.

- Determine the location to hang the Blades panels
- Fasten the appropriate anchor to the structure that will interface with the gripper structure anchors
- Remove the unneeded portion of the clip with tin snips ***(Fig 5)***

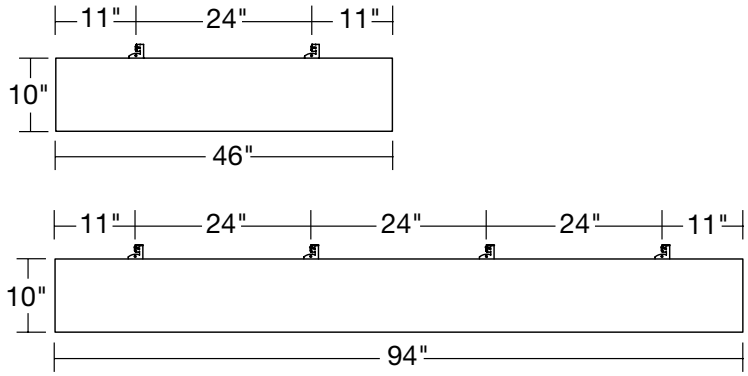

(Fig 3)

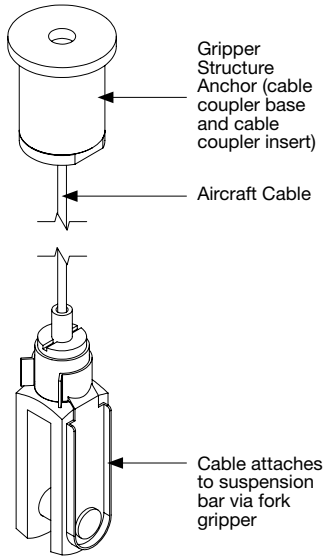

(Fig 4)

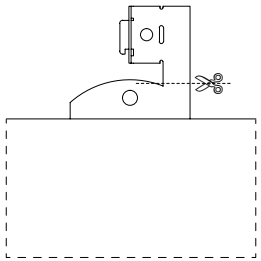

(Fig 5)

1. Attach the fork gripper and pin through the hole in the embedded attachment clip within the Blades panel. ***(Fig 6)***
2. Thread the aircraft cable through the fork gripper with cable extending beyond the gripper by at least 1".
3. Level the Blades panel to the finished height, carefully ensuring that the cable does not scratch or puncture the Blades panel, and trim the aircraft cable at the desired length once finished.
4. To release the cable and lower the Blades panel, take all weight off the fork gripper, push the release mechanism, and simply slide the cable out as needed.

IMPORTANT SAFETY AND QUALITY NOTE: Do not allow any portion of wire or aircraft cable to drop below the top of a panel while adjusting final height. Doing so could cause damage to the edge of the panel.

4.3 Group Installation on a Standard 2' x 2' Layout of Heavy-Duty Prelude® XL® 15/16" Grid

Soundscapes® Blades panels can be installed on Prelude XL heavy-duty suspension system by using the embedded attachment clips on the top of the SoundScapes Blades panels that rest on the flange of the grid.

- The suspension system must use Prelude XL heavy-duty main beams (includes 360º Painted Grid) and full-height cross tees (1-11/16"). These suspension components are necessary despite the seismic design category of the installation.
- For Seismic Design Category C, D, E, and F installations refer to Section 9 Seismic Installations and the Armstrong® Seismic Rx® guide to modify the suspension system to meet IBC requirements. For seismic category A and B installations refer to the following guidelines:
- Main beams closest to the perimeter must be no farther than 24" from each wall
- Main beams must have a hanger wire within 24" of the walls, and then a maximum of 4' O.C.
- The field of the suspension system assembly must be a standard 24" x 24" module build (main beams 48" O.C., 48" cross tees perpendicular to the main beams at 24" O.C., and 24" cross tees spanning the midpoints of the 48" cross tees. Once the suspension system is in place refer to Section 4.0 Blades Panel Attachment to Suspension System. ***(Fig 7)***

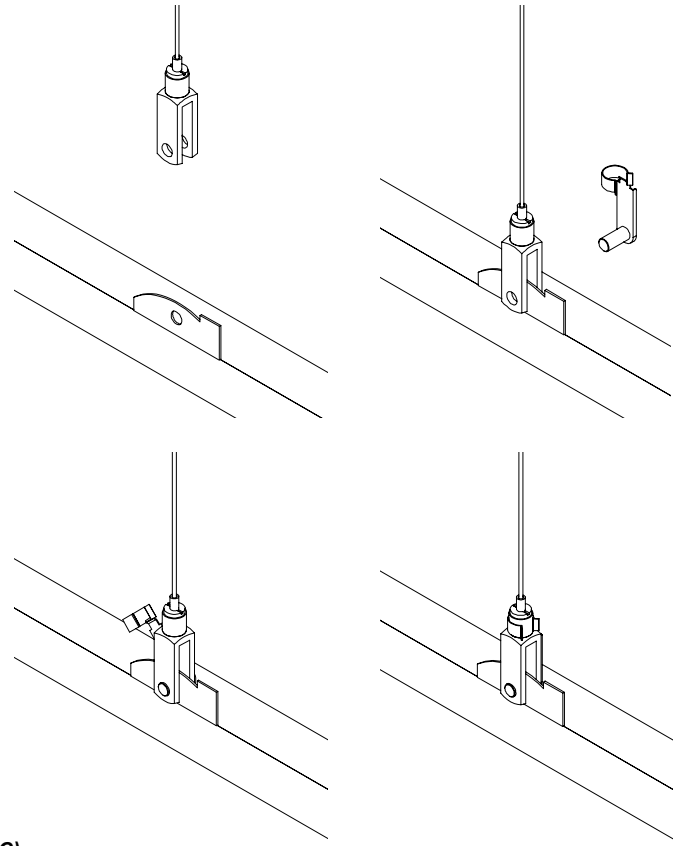

(Fig 6)

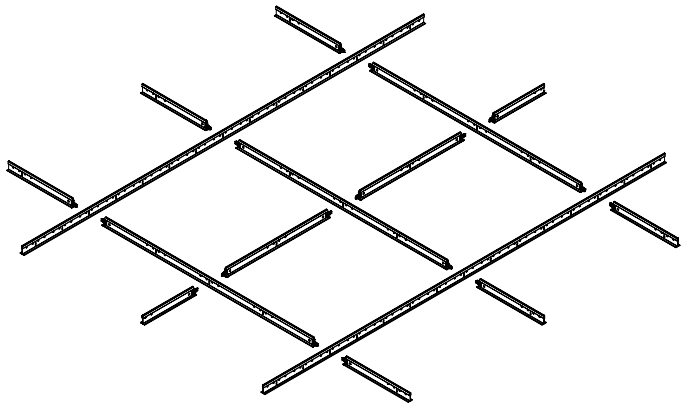

(Fig 7) *2' x 2', 4 ft O.C.*

4.4 Group Installation on a “Rail” Layout of Heavy-Duty Prelude® XL® 15/16" Grid

SoundScapes® Blades panels can be installed on a grid “Rail” system, using the following components:

- Prelude® XL® heavy-duty main beams (includes 360° painted grid main beams)
- Main beams must be spaced at 24" O.C.
- The rigid attachment clip (Item 6459BL) or ARBRKT brackets to attach main beams to the deck
- 2' cross tees installed at 4' or 6' O.C. for alignment and squaring *(Fig 8)*

4.4.1 Brackets

Brackets are used to attach the main beams to structure. Brackets are recommended within 12" of the ends and not more than 48" on center along the run of main beams. Brackets allow suspension system elevation adjustment from 1-3/4" to 5-1/2". Avoid installing the bracket on the main beam at the location of cross tees.

6459BL Rigid Attachment Clip – This clip must be accurately located before fastening to the structure for correct suspension system alignment and proper panel fit. Use a string line or laser to establish a straight row for bracket attachment. Use the appropriate fastener to anchor the clip to the structure.

ARBRKT Adjustable Hanger Bracket – This bracket is adjustable after fastening to the structure with a screw. This allows flexibility and minor variations for attachment to the structure. Use of a string line or laser is still recommended for this bracket. The suspension system can easily be aligned and squared for proper panel fit. Use the appropriate fastener to anchor the clip to the structure.

4.4.2 Main Beams

Main beams will run perpendicular to the Blades panel length and will act as carrying rails. Blades panel attachment will only be to main beams, and cross tees are added only for alignment and squaring of the system.

- 7301 Prelude XL main beams are installed at 24" on center to align with the embedded attachment clips
- The main beams must be attached to the brackets so that cross tee rout holes are located for proper spacing of the Blades panels per the reflected ceiling plan

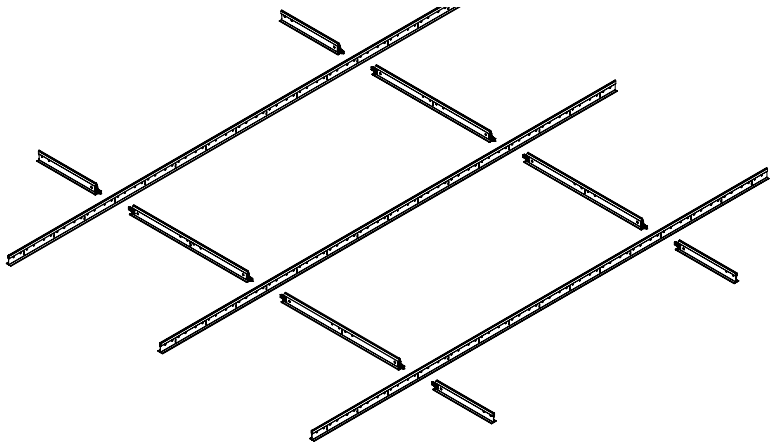

(Fig 8) *2' x 4', 2 ft O.C.*

First Row of Main Beams:
Use clamps or vise grips to temporarily secure the first main beam to the brackets. Adjust for proper location and elevation. Use two sheet metal screws (Type #8 x 1/2" sharp point screw) to fasten the bracket to the main beam. Use the typical method to join sections of main beams for long runs.

Additional Rows of Main Beams:
Brackets should be installed accurately to accommodate 24" O.C. main beam spacing. Use clamps or vise grips to temporarily secure the main beam in the second row to the brackets. To aid in alignment and squaring of the system, use 2' cross tees. These cross tees can be installed 48" or 72" O.C., in order to avoid rout holes that are needed for attachment of the Blades panels per the RCP.

Check System Squareness:
System squareness is a critical stage of suspension system installation. System squareness must be within 1/16" for the measurement of a 24" x 48" module. The system must be square or this will result in improper panel fit, poor alignment, and an unacceptable visual. To measure diagonals use a carpenter's square, or run a laser or dry line perpendicular to the mains to align rout holes. Secure the second main beam to the brackets with sheet metal screws.

For installations with multiple rows of main beams:
Once the first two main beams are square, temporarily clamp the furthest main beam of the installation. Clamp a dry line to a reference rout hole in the furthest main beam and then pull tight and clamp to the matching rout hole in the first main beam. Adjust the furthest main beam so that the dry line intersects the rout holes of the first two squared main beams. Screw attach the furthest main beam. Next, install all remaining main beams within the field of the installation so that the rout holes intersect the dry line. This will ensure proper alignment throughout the installation.

Trim off any excess main beam ends to keep the main beam concealed.

4.4.3 Cross Tees
Continue to install the remaining 24" cross tees at 48" O.C. throughout the rest of the installation. Since the main beams are secured with rigid brackets, you may need to roll the top bulb away to ease insertion of the cross tee clip. All single tee connections at the perimeters will need to be reinforced with an STAC clip for both seismic and non-seismic installations. ***(Fig 9)***

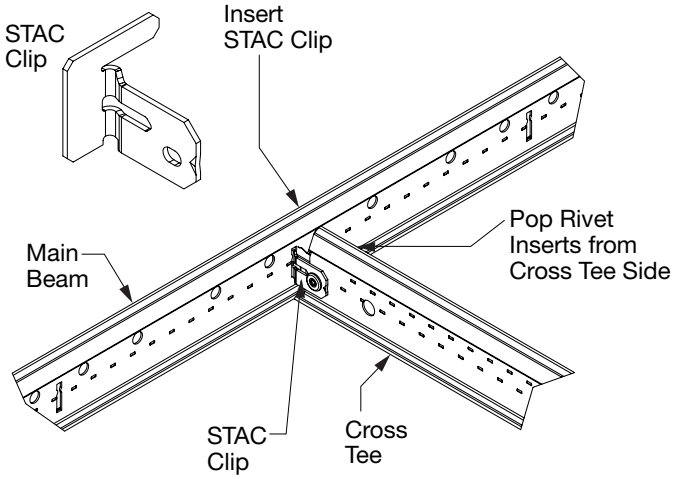

(Fig 9)

5. FLOATING PERIMETER/TRIM FOR DISCONTINUOUS SYSTEMS

For discontinuous grid installations Axiom® trim can be used to provide a professional, finished aesthetic around the grid.

It is recommended that Axiom interfaces at the grid level, because SoundScapes® Blades hang at various elevations below the face of the grid system. ***(Fig 15)***

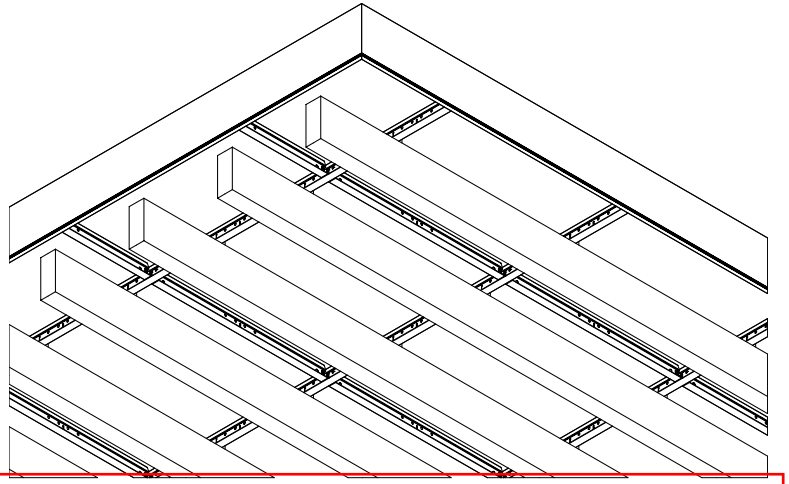

(Fig 15)

6. TRANSITIONS

SoundScapes Blades can be installed adjacent to other ceiling types or in conjunction with other ceilings. Transitions to a SoundScapes Blades installation can be made similarly to a traditional acoustical grid ceiling but must account for the elevation drop of the Blades panels below the suspension system.

7. BLADES PANEL ATTACHMENT TO SUSPENSION SYSTEM

The Blades panels can be installed by aligning the embedded attachment clip into the rout holes in the Prelude® XL® main beams. The 6" O.C. rout holes in the suspension system act as alignment and spacing indicators. Additional measuring and modifying of the suspension or embedded attachment clip is necessary when installing Blades panels off the 6" O.C. rout holes. In cases where the clip does not align with a rout hole, the clip can be modified and screw-attached as detailed in the following note:

Always consider load and swinging of vertical panels for any installation type. A 6" O.C. minimum spacing is recommended for all standard SoundScapes Blades panels installed on a Prelude XL suspension system.

1. Align the clip tabs on the embedded hardware in the appropriate rout holes of the suspension system.
2. Once the tabs are engaged, Blades panels will be level and ready to secure to the suspension system.
3. Attach to the suspension system with a short framing screw through the clip convenience hole and the web of the grid. One screw per Blades panel if the installation is Seismic Category A or B. One screw at each hardware-to-suspension connection if the installation is Seismic Category C, D, E, or F. ***(Fig 16)***

(Fig 16)

NOTE: In order to install Blades panels in a location where a rout hole is not present to accept the clip tab, use aviation snips to cut off the tab on the embedded hardware so that the remaining hardware can press firmly against the web of the suspension system. Once aligned, simply drive a short framing screw through each clip convenience hole at the location desired along the suspension system component. *(Fig 17)*

7.1 Attached to Axiom® Molding That is Directly Attached to Ceiling Structure

SoundScapes® Blades panels can be directly attached to Axiom® molding that is fastened to structure using the following components:

- Axiom molding (AXM34STR3XX)
- Fasteners for Blades panels to molding attachment (#8 x 7/16" self-drilling wafer headscrews, provided by contractor).
- Appropriate fastener for Axiom molding to structure connection (provided by contractor).

Refer to Sections 4.5.2 and 4.6.2 for more details.

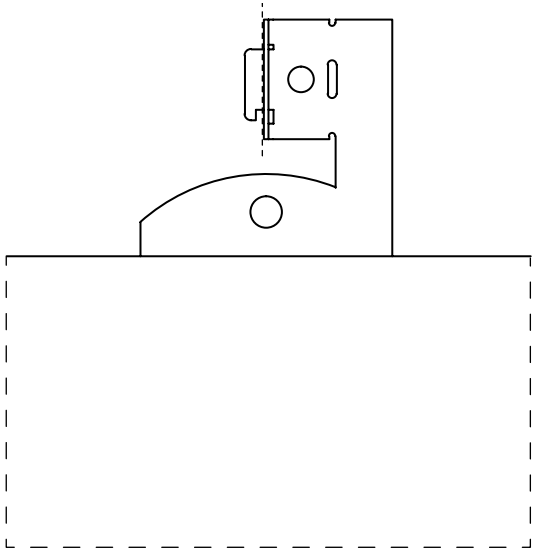

(Fig 17)

8. SPECIAL INSTALLATION CONSIDERATIONS

8.1 Sloped Installations

The following rules apply to sloped installations for SoundScapes Blades and are based on the installation method:

Independent Suspension with Hanging Kit
Blades panels should not be sloped and are intended for the bottom edge to be on a horizontal plane. This applies to all Seismic Design Categories.

Attached to Prelude® Grid
Blades panels should not be installed on sloped grid. This applies to all Seismic Design categories.

Directly Attached to Axiom Molding
When directly attached to Axiom molding, Blades panels can be installed on up to a 30-degree slope as long as the Blades panels and Axiom molding are running up the slope.

Ceilings with a slope angle >30 degrees require project specific engineering, which is the design team's responsibility. This applies to all Seismic Design categories.

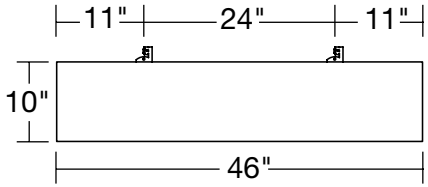

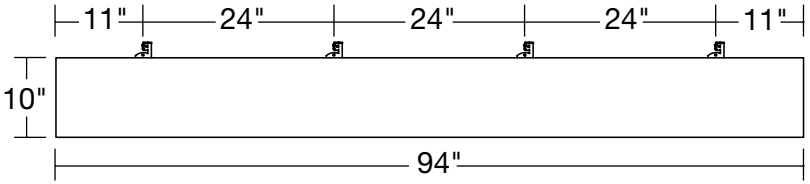

NOTE: All 4' and 8' panels have the same hardware (clip) spacing. To see drawings of all SoundScapes® Blades panels, see data page.

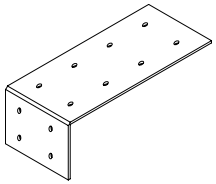

Rigid Attachment Clip – 6459BL

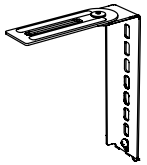

Adjustable Hanger Bracket – ARBRKT

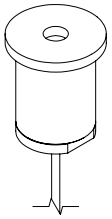

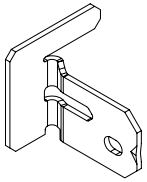

Single Tee Adapter Clip – STAC

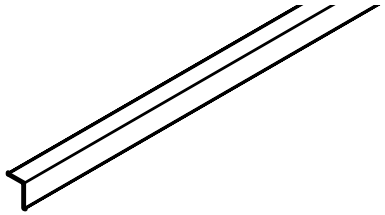

AXM34STR3XX

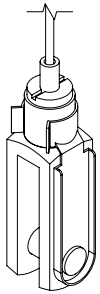

4-Point Hanging Kit – 6655

MORE INFORMATION

For more information, or for an Armstrong Ceilings representative, call 1 877 276-7876.
For complete technical information, detail drawings, CAD design assistance, installation information, and many other technical services, call TechLine customer support at 1 877 276-7876 or FAX 1 800 572-TECH.

Sherwin-Williams® is a registered trademark of The Sherwin-Williams Company;
all other trademarks used herein are the property of AWI Licensing LLC and/or its affiliates.
© 2021 AWI Licensing Company Printed in the United States of America

BPLA-297844-421

Armstrong®
CEILING & WALL SOLUTIONS

Fracture Panel

FilaSorb™ 12

acoufelt
making quiet

Product Detail

Product	Fracture Panel
Surface	Wall
Composition	100% Polyester
Material	FilaSorb™
Recycled Content	60% min.
Thickness	12mm | 0.47" +/- 10%
Weight	0.49 lb/ft² +/- 10%
Dimension	48"W x 110"H
	Custom size available upon request.

Technical Data

Fire Test Method Number	AS ISO 9705:2003 Group 1
	ASTM E84-17a Class A
	ISO 9705: 1993 Group 1
Indoor Air Quality	Low VOCs emission, formaldehyde and Phenol-free
Light Fastness	ISO 105-B02 1994, 6-7

Acoustic Performance

Sound Absorption ISO 354-2006 NRC 0.45

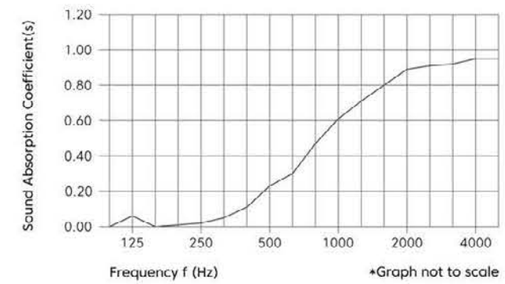

Frequency f(Hz)	125	250	500	1000	2000	4000	NRC
12mm a_s	0.06	0.02	0.23	0.61	0.89	0.95	0.45

Product Drawing

Elevation

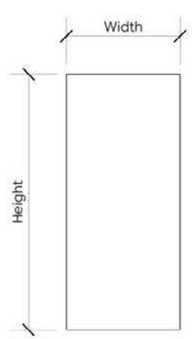

Perspective

Guarantees

Lead Time	Ships in 4-6 weeks
Light Fastness Warranty	10 Years*
Customizable	Yes

* conditions apply

Environmental Attributes

- Declare Certification
- LCB Red List Free
- Phenol And Formaldehyde Free
- Low VOC
- CDPH Compliance
- Aligns With Building Standards

acoufelt
making quiet

Patterns

Go To Mounting Methods
Go To Colorways

*Click any pattern to go to Recommended Layouts.

Chevron

Pennant

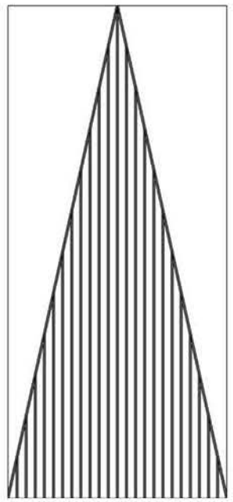

Summit

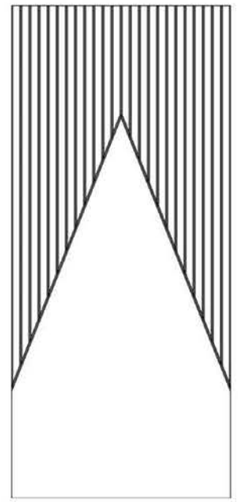

Arch

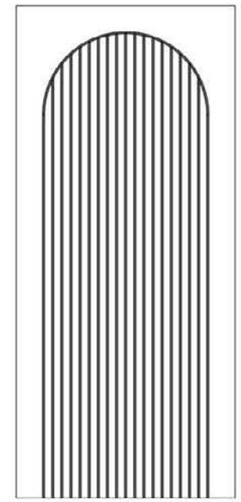

Metropolis

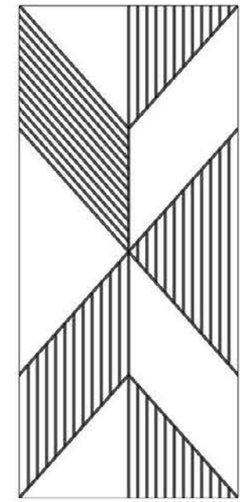

Track

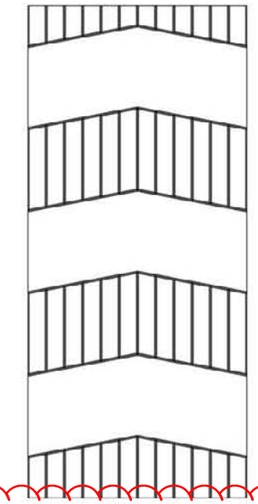

Pulse

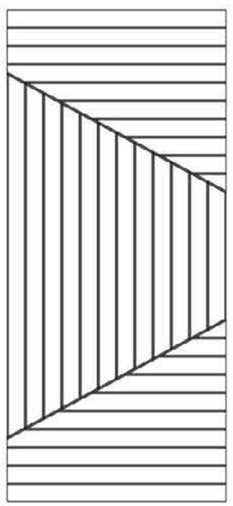

Harlequin

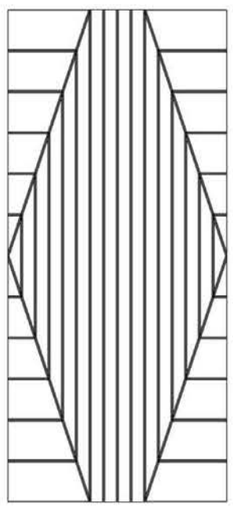

Spirograph

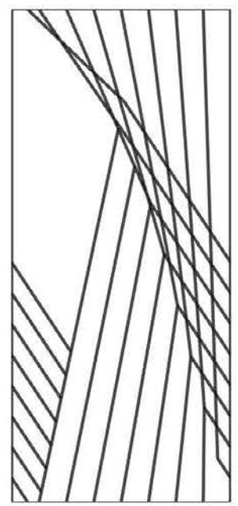

Prism

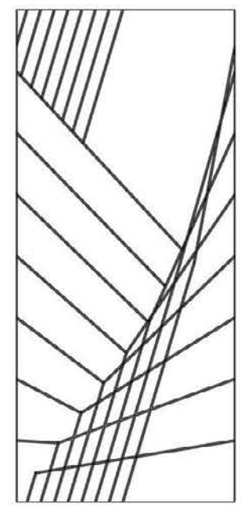

Rowhouse

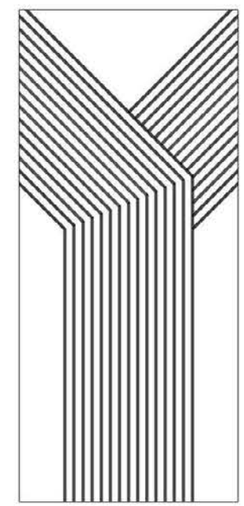

Intersect

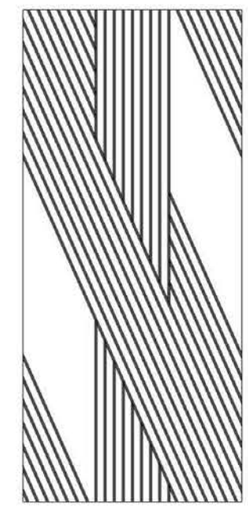

acoufelt
making quiet

Colorways

Go To Product Detail
Go To Patterns
Go To Mounting Methods

Lipstick Red
LI14

Carrot
CA08

Butter
BU07

Popcorn
PO26

Pistachio
PI25

Wasabi
WA29

Thistle
TH28

Peacock
PE20

Oregano
OR18

Kale
KA12

Denim
DE09

Midnight
MI16

Azur
AZ05

Marine
MA15

Periwinkle
PE23

Iris
IR10

Berry
BE06

Lilac
LI13

Peach
PE19

Peppercorn
PE22

Piano Black
PI24

Charcoal
CH01

Slate
SL27

Grey
GR02

Metal
ME03

Platinum
PL04

White
WH12

Pearl
PE21

Ivory
IV11

acoufelt
making quiet

AWP1

March 2021

Care and Maintenance Guide

FilaSorb™ products

Acoufelt recommends inspecting panels upon delivery to ensure there has been no damage or marks made to the product during production or dispatch. Please contact Acoufelt immediately to report any faults with the product.

General Care

- Periodic dusting and vacuuming helps to maintain panel appearance. Dust with a soft cloth. When vacuuming, use low suction function and a soft brush attachment.
- Avoid installing colored panels in a location that is subject to prolonged periods of direct sunlight or heat.

Professional Cleaning

- Acoufelt recommends contacting a professional cleaning service for thorough panel cleaning where required.
- Should you choose to outsource your panel maintenances, Acoufelt are willing to assist with names and details of reputable cleaning companies. The effectiveness of any cleaning program depends on careful supervision, trained personnel and the use of correct equipment and chemicals.

Spot Cleaning

- Spills, marks and stains should be addressed and treated as soon as possible.
- Test any proposed cleaning method on an inconspicuous section before proceeding, and take extra care when cleaning dark colours.
- Use a mild soap and warm water solution to gently scrape soil or mop liquid from the surface of the product.
- Use a soft sponge or cloth to apply a blotting technique.
- Apply minimal pressure and avoid scrubbing or concentrated rubbing.
- Avoid using excessive amounts of water or other cleaning liquids. If required, ensure adequate ventilation so that the panel can dry.
- When the stain or mark has been removed, mop moisture with a dry clean cloth using a blotting technique.
- Allow the panel to dry away from direct heat and sunlight.

DISCLAIMER: Acoufelt offers these cleaning and maintenance suggestions, however, the customer undertakes cleaning treatment at their own risk. Acoufelt will not be responsible for unsatisfactory results from the proposed treatments contained in this document.

WWC1

LEFT COAST WHITE OAK

SPECIFIER'S GUIDE
+ TECHNICAL DATA

ANTHOLOGY WOODS

APPLICATION	WIDTH(S)	GRADE	FINISH	SPECIFY AS
Flooring + Interior Cladding	5" Fixed	Character +	Unfinished	Left Coast White Oak 5" / SLCWOFL-050-CH-UF
Flooring + Interior Cladding	3, 4, 5" Mixed	Character +	Unfinished	Left Coast White Oak 345" / SLCWOFL-345-CH-UF
ThinClad Interior Cladding	3, 4, 5" Mixed	Character +	Unfinished	Left Coast White Oak ThinClad / SLCWOTC-345-CH-UF
A variety of fixed and mixed widths are available up to 8" wide and custom profiles, finishes & applications are available. Also available engineered up to 10" wide. Please inquire for more information.				Inquire to create your custom specification

PROFILE DETAILS / Note: drawing is not to scale

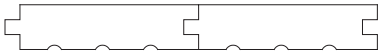

TONGUE & GROOVE Standard
(other profiles available)

T&G:MICRO-BEVEL
Standard on most engineered products, recommended for most prefinished items & wall cladding

T&G:THINCLAD WITH MICRO-BEVEL
Recommended for interior wall cladding

DESCRIPTION
Recovered solid White Oak

MILLWORK
Surfaced 4 sides, tongue and groove (ThinClad has micro-bevel), back-relieved and end-matched

DIMENSIONS

FLOORING+CLADDING:
¾" thick x (specified width)" wide x 1' - 10' solid random lengths

THINCLAD CLADDING:
11/32" thick x mixed 3, 4, & 5 widths x 2'-10' solid random lengths

SPECIES
Quercus garryana

HARDNESS
Janka rating 1660. Suitable for high-traffic indoor environments.

SUSTAINABILITY
Recovered and upcycled byproduct from contemporary harvest of conifer trees in Pacific Northwest. May qualify for LEED MR 5.1 and 5.2 (Regional Materials), EQ 4.2 (Low- Emitting Materials).

LEAD TIME
6 Weeks

CHARACTER /GRADE

SELECT: Variety in grain patterns, small tight knots, burls, limited slightly open checks (no shake), and unlimited natural color variation with bright sapwood.

CHARACTER: Allows unlimited color variation, bright sapwood, and a variety of fillable defects including surface checks, sound knots and open characters.

FLAME SPREAD
White Oak: 100(class C). Factory applied flame retardant coatings are available.

PRODUCT SUITE
Flooring, Cladding, Stair Treads & More

MINIMUM ORDER
250 square feet

Note: Wood is a natural substance and varies in appearance. Please refer to product images or request samples for a broader representation of the color and character of your selection.

1-800-293-8178
info@anthologywoods.com
anthologywoods.com

Rondolo® Wood Plank

decoustics®

WWP1

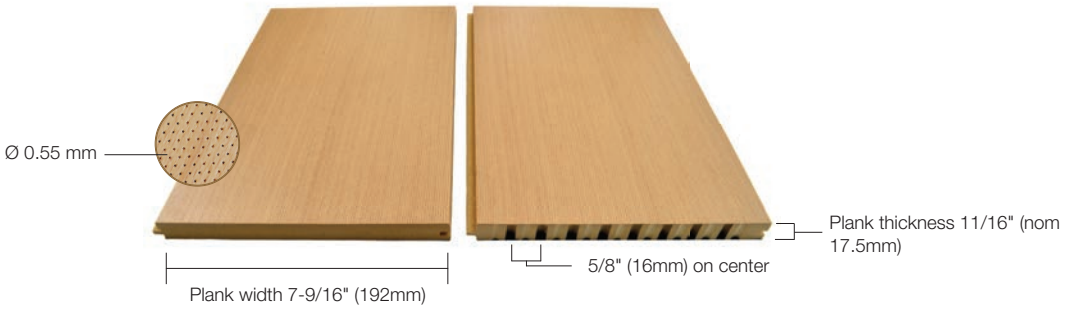

DESIGN AND SPECIFICATIONS

Description

Rondolo® is an acoustical wood plank product consisting of a perforated fire rated medium density fiberboard (MDF) with a micro perforated natural wood veneer laminated to the face and an acoustically transparent black mat laminated to the back side. The MDF core is a No Added Urea Formaldehyde (NAUF) standard core. The plank is cut to fit on site and is typically installed on wood or steel furring 24" (610mm) on center with insulation placed behind the panel. The plank width measures 7-9/16" (192 mm) wide and up to 120" (3050mm) long. The planks have a tongue and groove edge which is blind nailed to wood or screwed to a steel furring channel using a concealed mounting clip to provide micro bevelled reveals simulating solid wood wall panelling.

PROFILES: Rondolo® planks are available pre-finished in clear lacquer. The planks can be manufactured with custom lacquer toning, and sheen to match other wood finishes. Veneer lay-up is produced as slip matched, quarter cut as a standard.

Rondolo® is available in Beech, Cherry, Maple, and Ash veneers (quarter cut and pre lacquered), and paint finishes. Other finishes can be accommodated. Standard length is 120" (3050mm).

Standards, Tests & Approvals

FIRE: Rondolo® planks are Class A per ASTM E-84 with a flame spread of 25 or less.

Note: Rondolo® is a dimensionally metric product. Imperial dimension equivalents stated in this document are rounded to the nearest fraction. When calculating exact equivalent dimensions, divide the metric (mm) dimension by 25.4.

Features and Advantages:

Specialized water-based, low VOC lacquer.

Class A fire rated finished product.

The open area percentage of Rondolo® is 6.9%.

Absorption characteristics can be modified by changing the substrate thickness.

Additional Product Information

ORDERING: As with most millwork products, Rondolo® has a longer lead time, and should be dealt with early in a project, since veneer and samples approval may required.

SAMPLES: Samples should be approved based on the finished product and not just a sample of veneer.

TRIM OPTIONS: Due to the dynamic nature of the core material, flush trimming is not recommended. The trim must overlap to capture the planks edges.

PANEL WEIGHT: A Rondolo® plank having an overall thickness of 11/16" (nom 17.5mm) weighs an average of 2 lbs. per sq. ft. (9.75 kg/m^2).

SUGGESTED TOOLS: Traditional woodworking tools are suitable for cutting Rondolo®. Decoustics recommends using large diameter chop saws or radial saws having a carbide blade with a sharp, thin-kerf, 80 tooth - at 10" (254mm) diameter - and alternating 40° bevel. Cut plank with face up to avoid scratching.

Note: A traditional table saw would require the plank to be cut much slower to avoid tear-out or chipping. If cutouts are required for round fixtures, Decoustics recommends a router and template method using a quality spiral-down carbide flute cutting bit.

INSTALLATION: Rondolo® planks should be installed by qualified finish carpenters in accordance with the Millwork and Acoustical Sections of the specification. Proper tools and construction skills should be employed.

ENVIRONMENT: Wood products are highly susceptible to changes in humidity and temperature. Close attention must be paid to acclimatization during installation, as per accepted millwork industry practice.

Rondolo® planks must be stored, installed, and maintained only in a stable ambient environment. The relative humidity must be maintained within 5% tolerance in the range of 35% to 55%, temperature to be maintained between 20 - 27ºC (68-80ºF)) Rondolo® planks must be allowed to stabilize on site for 72 hours prior to installation.

After Installation - Maintenance Requirements

Rondolo® acoustical wood planks are manufactured using real wood veneers and engineered wood components and therefore should be cared for as all other Architectural wood products are. When cleaning, vacuum plank surfaces using a non-marring, natural bristle head. Avoid hard or very short bristle cleaning heads.

Minor surface scuffing or scratches can be removed by lightly rubbing the affected area with a dry, clean pad of #0000 fine steel wool. Do not over apply. Avoid using water or a damp cloth on large surfaces as this may affect the stability of the membrane surface. Aerosol furniture polishes can be used on small areas, however, do not spray directly on the surface of the acoustic membrane. Apply small amounts on a soft cloth and rub gently.

Wood is a hydroscopic material, and under normal use conditions all wood products contain some moisture. Wood readily exchanges this molecular moisture with water vapor in the surrounding atmosphere according to existing relative humidity. In high humidity, wood picks up moisture and swells and in low humidity, gives up moisture and shrinks. Any uncontrolled extremes may affect the structural integrity of the planks and cause visual problems. To avoid this, relative humidity should always be maintained between 35% and 55% in the area where planks are installed.

For repair of fractured or badly damaged planks, consult the factory for advice.

Note: The information provided in this Data Sheet is accurate to the best of our knowledge at the time of printing. However, we reserve the right to make changes when necessary without further notification. Suggested applications may need to be modified to conform with local building codes and conditions. We cannot accept responsibility for products that are not used, or installed to our specifications. Please refer to our website for most current data.

Note: Only handle planks wearing clean, lightweight, white gloves during installation. Follow manufacturer's printed instructions for installation as well as field cutting of planks.

Acoustical Data (ASTM C423: Mounting as per ASTM E795).

FINISH	PLANK THICKNESS	FREQUENCY (Hz) 125	250	500	1000	2000	4000	NRC	SAA
Type F5 Mounting									
Rondolo®	5/8" (16mm) Plank *No Fiberglass Backing	0.07	0.09	0.22	0.60	0.96	0.38	0.45	0.46
Type F25 Mounting									
Rondolo®	5/8" (16mm) Plank 1" (25mm) Backing*	0.26	0.51	1.10	1.01	0.85	0.54	0.85	0.87

Type F5 Mounting: Planks are mounted 5mm from the substrate

Type F25 Mounting: Planks are mounted 25mm from the substrate

**Planks with 6 to 7 lbs/cu.ft. 1" (25mm) thick regular fiberglass.*

Decoustics

61 Royal Group Crescent
Woodbridge, Ontario L4H 1X9 Canada

www.decoustics.com

Phone: 905-652-5200
Toll Free: 800-387-3809

© 09/19 Decoustics
Rondolo Plank_DATASHEET

TOILET ACCESSORIES

TA2

5A10

Toilet Tissue Dispenser

☐ Model 5A10-11—Surface-Mounted

Bradex®

☑ Diplomat Series

☑ Dual Roll

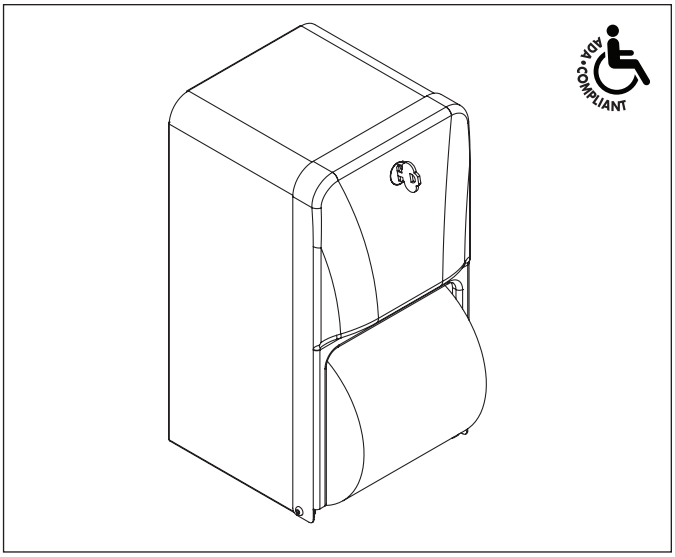

Product Materials

CABINET: 0.030-inch/22ga.-(0.76 mm) stainless steel with exposed surfaces in architectural satin finish. Welded construction with seamless corners and burr-free edges.

SERVICE DOOR: 0.030-inch/22ga.-(0.76 mm) stainless steel with tumbler lock keyed like other Bradley units. Hinged at bottom.

SPINDLES: molded polyethylene.

Capacity

Single-roll dispenser with roll-in-reserve.

Operation

Cabinet holds two rolls up to 4-1/2"W x 5-1/4" diameter standard core toilet tissue, one above the other. When first roll is used-up, fresh roll automatically drops down for use. Unique retaining mechanism prevents use of spare roll until first roll is completely used. Spindles non-removable by user. Hinged door permits access to storage compartment for servicing of unit.

Installation

Surface mounted units must have holes drilled by installer. Secure unit to wall or partition with mounting screws (not included). Shim at screw points as required.

Guide Specification

Surface-mounted toilet tissue dispenser, with face formed with contemporary contours, radii, and finish matching related accessories in manufacturer's designer series. Single roll up to 5-1/4" diameter in standard roll dispenser with drop-down roll-in-reserve; rolls mounted on non-removable molded polyethylene spindles. Equipped with bottom-hinged service door with keyed tumbler lock. Universal keying. Formed from stainless steel sheet with satin finish on exposed surfaces, fully welded, with seamless corners and burr-free edges: cabinet and door 0.030-inch / 22-ga. thick.

Overall dimensions: 5 9/16"W x 10 7/8"H x 6 3/16"D.

MasterFormat Title: Commercial Toilet Accessories

MasterFormat Number: 10 28 13.13

OmniClass Title: Toilet and Bath Specialties

OmniClass Code: 23.31.25.00

For information on Warranties, Maintenance and BAA/ARRA Compliance, visit our web site at: bradleycorp.com/products/accessories/.

Orders composed of products indicated as ***Bradex®*** will be available to ship in three days after receipt of order at the factory. There is no pricing penalty for this service from Bradley.

This information is subject to change without notice.

© 2015 Bradley

P.O. Box 309, Menomonee Falls, WI 53052-0309
800 BRADLEY (800 272 3539) +1 262 251 6000
bradleycorp.com

Dimensions

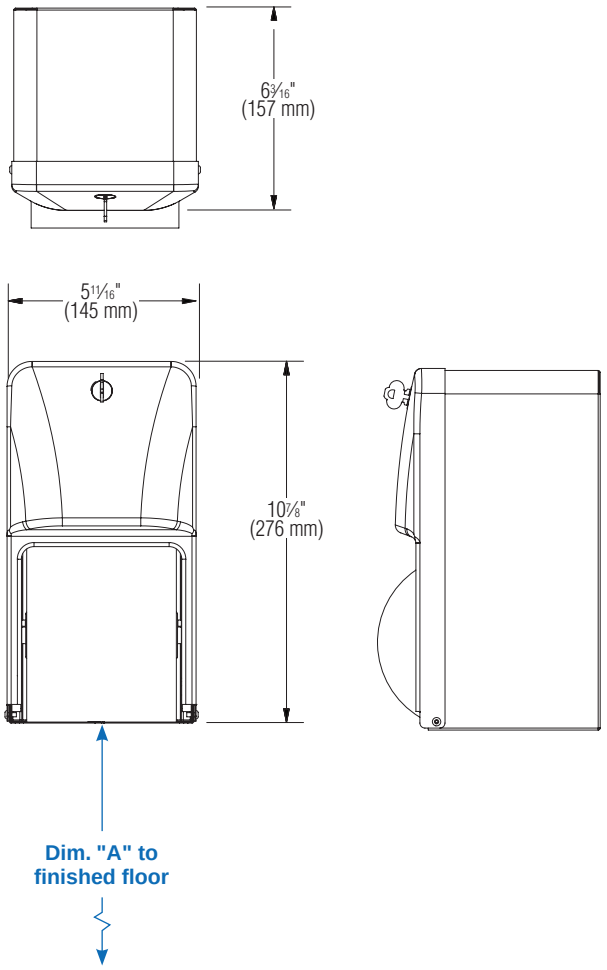

Dim. "A" Key Surface:	For Dim. "A"	Locate Top of Unit	Locate Bottom of Unit
Bottom of toilet paper opening to finished floor	20" (508mm)	30¾" (781mm)	19⅞" (505mm)
	19" (483mm)	29¾" (756mm)	18⅞" (479mm)
	18" (457mm)	28¾" (730mm)	17⅞" (454mm)
	17" (432mm)	27¾" (705mm)	16⅞" (429mm)
	16" (406mm)	26¾" (679mm)	15⅞" (403mm)
	15" (381mm)	25¾" (654mm)	14⅞" (378mm)

Orders composed of products indicated as **Bradex**® will be available to ship in three days after receipt of order at the factory. There is no pricing penalty for this service from Bradley.

This information is subject to change without notice.

© 2015 Bradley
P.O. Box 309, Menomonee Falls, WI 53052-0309
800 BRADLEY (800 272 3539) +1 262 251 6000
bradleycorp.com

TA3

5A20

Toilet Tissue Dispenser

☐ Model 5A20 — Partition-Mounted

- ☑ Diplomat Series
- ☑ Serves Two Compartments
- ☑ Dual Roll

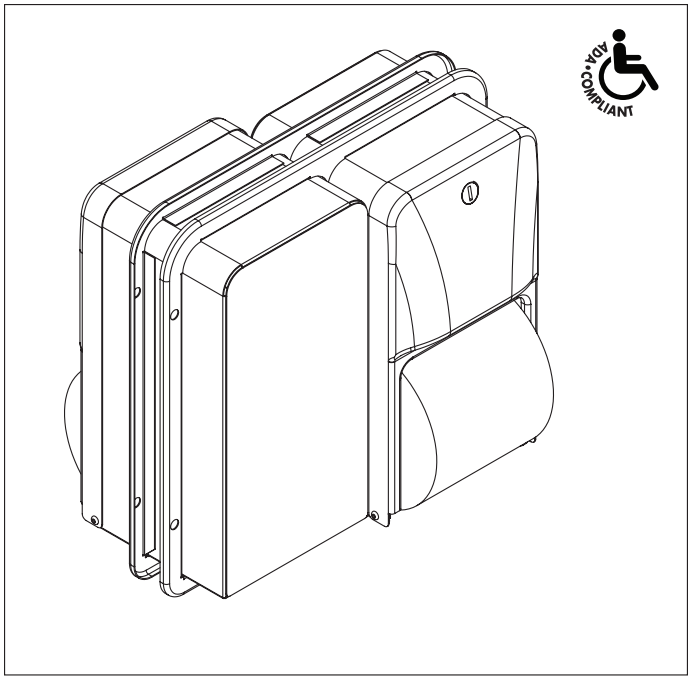

Product Materials

CABINET: 0.030-inch/22ga.-(0.76 mm) stainless steel with exposed surfaces in architectural satin finish. Welded construction with seamless corners and burr-free edges

SERVICE DOOR: 0.030-inch/22ga.-(0.76 mm) stainless steel with exposed surfaces in architectural satin finish and tumbler lock keyed like other Bradley units. Hinged at bottom.

FLANGE: 0.030-inch/22ga.-(0.76 mm) stainless steel with exposed surfaces in architectural satin finish. Flange of one-piece seamless construction, ⅝" wide with ¼" return.

SPINDLES: molded polyethylene.

Capacity

Double-sided unit includes single-roll dispenser with roll-in-reserve serving each compartment.

Operation

Each cabinet holds two rolls up to 4-1/2"W x 5-1/4" diameter standard core toilet tissue, one above the other. When first roll is used-up, fresh roll automatically drops down for use. Unique retaining mechanism prevents use of spare roll until first roll is completely used. Spindles non-removable by user. Hinged door permits access to storage compartment for servicing of unit. Serves two toilet compartments, dispensing one roll to each side of partition, while holding a second roll in reserve.

Installation

Verify all rough-in dimensions prior to installation. Requires partition opening 11⅛"H x 11½"W. Secure with mounting screws (included) at holes provided.

ADA Compliant

- ☑ Consult local and national accessibility codes for proper installation guidelines.
- ☑ Conformity and compliance to local and national codes is the responsibility of the installer.

Guide Specification

Toilet tissue dispenser unit with contemporary contours, radii, and finish matching related toilet accessories in manufacturer's designer series. Recessed unit mounts through partition to service two compartments. Capacity for two standard-core toilet tissue rolls of up to 5-1/4" (133 mm) diameter on each side; roll-in-reserve drops in place when first roll is depleted. Service door with keyed tumbler lock drops down to enable product loading. Tissue rolls mounted on theft-resistant molded ABS non-controlled delivery spindles. Cabinet, door, and cam formed and welded without seams from 0.030-inch/22 ga. - (0.76 mm) thick stainless steel, with non-directional satin finish on exposed portions.

Overall dimensions: 12⁷⁄₁₆"W x 12⅛"H x 7¾"D.

MasterFormat Title: Commercial Toilet Accessories
MasterFormat Number: 10 28 13.13

OmniClass Title: Toilet and Bath Specialties
OmniClass Code: 23.31.25.00

For information on Warranties, Maintenance and BAA/ARRA Compliance, visit our web site at:
bradleycorp.com/products/accessories/.

This information is subject to change without notice.

© 2015 Bradley
P.O. Box 309, Menomonee Falls, WI 53052-0309
800 BRADLEY (800 272 3539) +1 262 251 6000
bradleycorp.com

Dimensions

(mm)

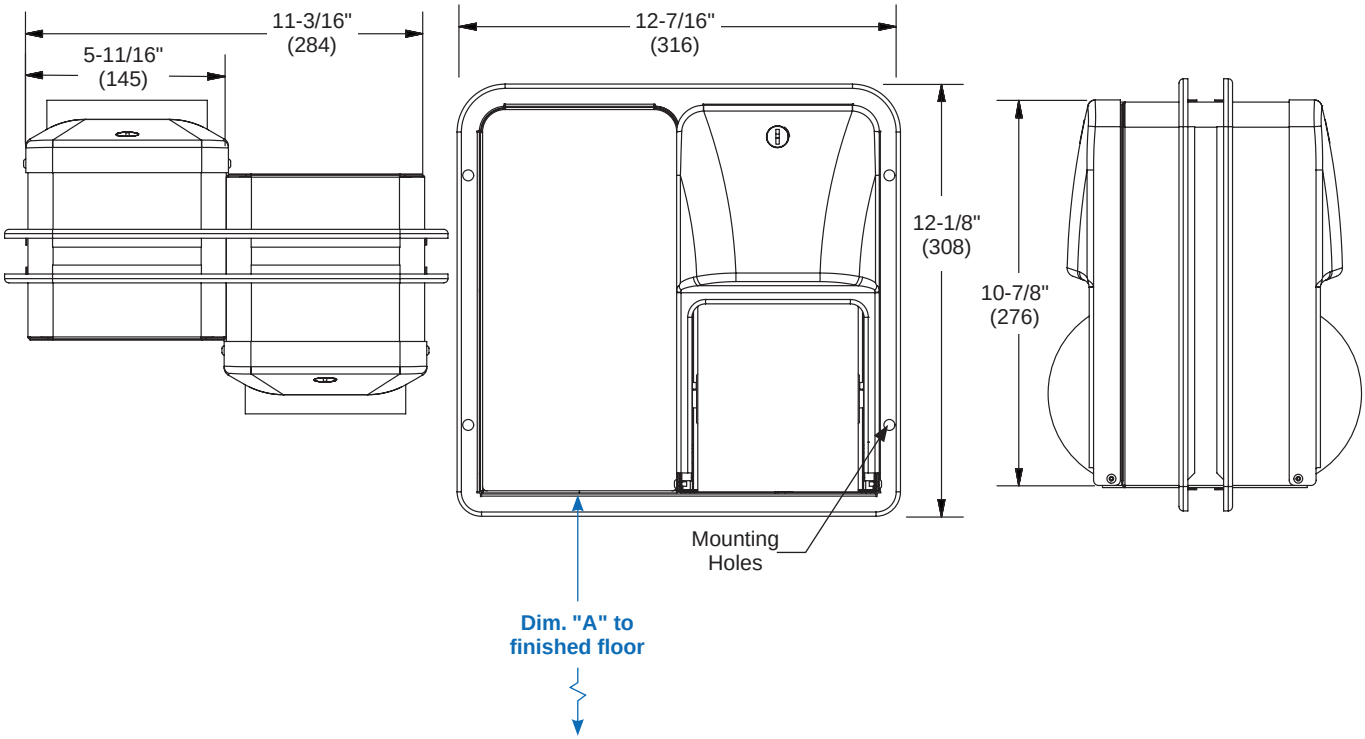

Dim. "A" Key Surface:	For Dim. "A"	Top of Rough Wall Opening	Bottom of Rough Wall Opening
Bottom of toilet paper opening to finished floor	20" (508mm)	31¼" (794mm)	20⅛" (511mm)
	19" (483mm)	30¼" (768mm)	19⅛" (486mm)
	18" (457mm)	29¼" (743mm)	18⅛" (460mm)
	17" (432mm)	28¼" (718mm)	17⅛" (435mm)
	16" (406mm)	27¼" (692mm)	16⅛" (410mm)
	15" (381mm)	26¼" (667mm)	15⅛" (384mm)

© 2015 Bradley
P.O. Box 309, Menomonee Falls, WI 53052-0309
800 BRADLEY (800 272 3539) +1 262 251 6000
bradleycorp.com

TA4

4A11

Sanitary Product Disposal Unit

☐ Model 4A11 — Partition-Mounted

- ☑ Diplomat Series
- ☑ Serves Two Compartments

☑ If used with an odd number of toilet compartments, use one Bradley Model 4A00 napkin disposal on side wall of end compartment.

Product Materials

FLANGE: 0.030-inch/22ga.-(0.76 mm) stainless steel with exposed surfaces in architectural satin finish. One-piece seamless construction, ⅝" wide with ¼" return.

CABINET: 0.030-inch/22ga.-(0.76 mm) stainless steel with exposed surfaces in architectural satin finish. All welded construction matching curvature to other Bradley Diplomat washroom accessories.

PUSH FLAP DOOR: 0.036-inch/20ga.-(0.92 mm) stainless steel with exposed surfaces in architectural satin finish. Heavy-duty stainless steel piano hinge and tumbler locks keyed like other Bradley units. Self-closing flap door.

Capacity

1.5 gal (0.2 cu. ft.)

Operation

Waste container removable from one side with finger grip.

Installation

Verify all rough-in dimensions prior to installation. Requires partition opening 11¼"W x 13¾"H. Location of hole and dimensions should be noted in partition specifications. Adjustable for partitions from 1/2" to 1-1/8" thick. Secure with mounting screws (included) at holes provided. Shim at screw points as required.

Guide Specification

Partition-mounted, dual-sided napkin/tampon disposal unit with self-trimming flanges, with faces formed with contemporary contours, radii, and finish matching related accessories in manufacturer's designer series. Capacity 1.5 gal (0.2 cu. ft.). Equipped with push flap doors with concealed hinges, hinged drop-down service door and keyed tumbler lock, and removable waste container. Universal keying. Formed from stainless steel sheet with satin finish on exposed surfaces, fully welded, with seamless corners and burr-free edges: cabinet, flange, and waste container 0.030-inch / 22-ga. thick; door 0.036-inch / 20-ga. thick. Provide manufacturer's single-sided unit on side wall of odd-numbered end compartments where applicable.

Overall dimensions: 12 5/16"W x 14 13/16"H x 6"D.

MasterFormat Title: Commercial Toilet Accessories
MasterFormat Number: 10 28 13.13

OmniClass Title: Toilet and Bath Specialties
OmniClass Code: 23.31.25.00

ADA Compliant

- ☑ Consult local and national accessibility codes for proper installation guidelines.
- ☑ Conformity and compliance to local and national codes is the responsibility of the installer.

For information on Warranties, Maintenance and BAA/ARRA Compliance, visit our web site at: bradleycorp.com/products/accessories/.

© 2017 Bradley
P.O. Box 309, Menomonee Falls, WI 53052-0309
800 BRADLEY (800 272 3539) +1 262 251 6000
bradleycorp.com

Dimensions

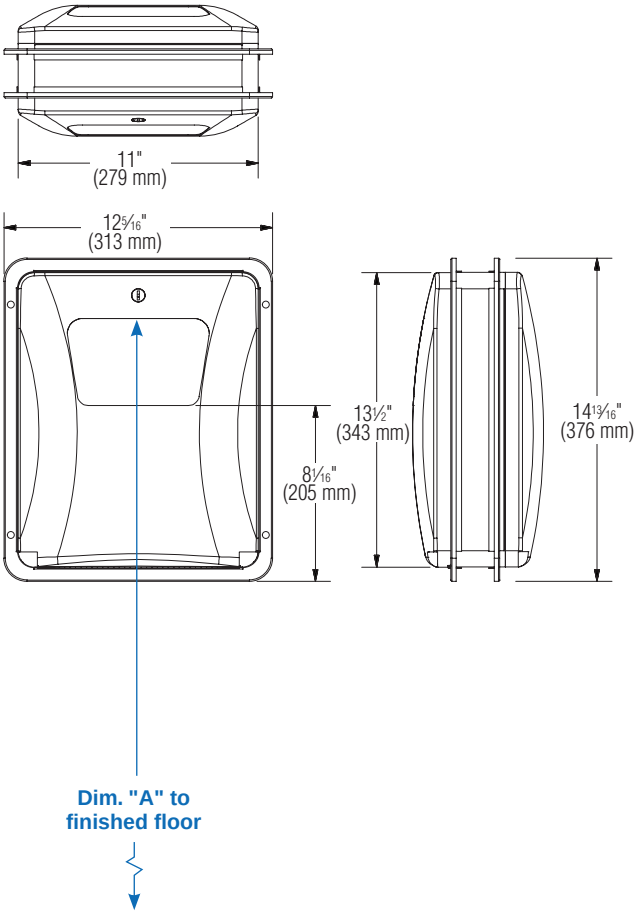

Dim. "A" Key Surface:	For Dim. "A"	Locate Top of Rough Wall Opening	Locate Bottom of Rough Wall opening
Top of Door (4" Door Opening) to finished floor	48" (1219mm)	50" (1270mm)	36¼" (921mm)
	40" (1016mm)	42" (1067mm)	28¼" (718mm)
	32" (813mm)	34" (864mm)	20¼" (514mm)
	24"(610mm)	26" (660mm)	12¼" (311mm)

© 2017 Bradley
P.O. Box 309, Menomonee Falls, WI 53052-0309
800 BRADLEY (800 272 3539) +1 262 251 6000
bradleycorp.com

TA5

4A10

Sanitary Product Disposal Unit

○ Model 4A10-11 — Surface-Mounted *Bradex®*

☑ Diplomat Series

Product Materials

COVER: 0.030-inch/22ga.-(0.76 mm) stainless steel with exposed surfaces in architectural satin finish. Heavy-duty stainless steel piano hinge.

CONTAINER: 0.030-inch/22ga.-(0.76 mm) stainless steel with exposed surfaces in architectural satin finish. All welded construction with front curvature matching other Bradley Diplomat washroom accessories.

Operation

Lid opens for removal of waste. Box of 500 waxed paper liners are available by ordering part number P11-022.

Installation

Surface mounted units must have holes drilled by installer. Secure unit to wall or partition with mounting screws (not included). Shim at screw points as required.

Guide Specification

Surface-mounted napkin/tampon disposal unit, with face formed with contemporary contours, radii, and finish matching related accessories in manufacturer's designer series. Capacity 1.5 gal (0.2 cu. ft.). Equipped with hinged cover; accepts owner's disposable liners. Formed from stainless steel sheet with satin finish on exposed surfaces, fully welded, with seamless corners and burr-free edges: cabinet and waste container 0.030-inch / 22-ga. thick; door 0.036-inch / 20-ga. thick.

Overall dimensions: 8"W x 10 1/16"H x 3 7/8"D.

MasterFormat Title: Commercial Toilet Accessories
MasterFormat Number: 10 28 13.13

OmniClass Title: Toilet and Bath Specialties
OmniClass Code: 23.31.25.00

ADA Compliant

☑ Consult local and national accessibility codes for proper installation guidelines.

☑ Conformity and compliance to local and national codes is the responsibility of the installer.

For information on Warranties, Maintenance and BAA/ARRA Compliance, visit our web site at: bradleycorp.com/products/accessories/.

Orders composed of products indicated as *Bradex®* will be available to ship in three days after receipt of order at the factory. There is no pricing penalty for this service from Bradley.

This information is subject to change without notice.

© 2020 Bradley
P.O. Box 309, Menomonee Falls, WI 53052-0309
800 BRADLEY (800 272 3539) +1 262 251 6000
bradleycorp.com

Dimensions

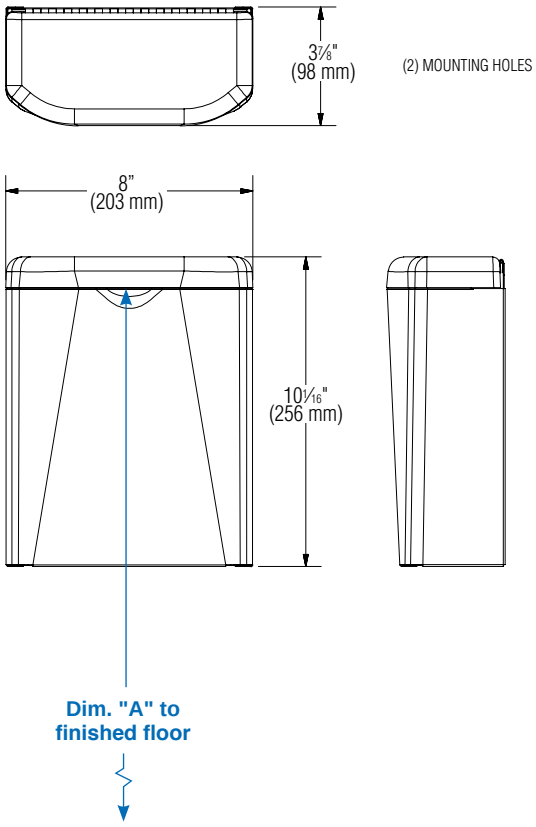

Dim. "A" Key Surface:	For Dim. "A"	Locate Top of Unit	Locate Bottom of Unit
Waste receptacle top lip to finished floor	48" (1219mm)	49" (1245mm)	38¹⁵⁄₁₆" (989mm)
	40" (1016mm)	41" (1041mm)	30¹⁵⁄₁₆" (786mm)
	32" (813mm)	33" (838mm)	22¹⁵⁄₁₆" (583mm)
	24"(610mm)	25" (635mm)	14¹⁵⁄₁₆" (379mm)

Orders composed of products indicated as **Bradex**® will be available to ship in three days after receipt of order at the factory. There is no pricing penalty for this service from Bradley.

View Latest Version

© 2020 Bradley
P.O. Box 309, Menomonee Falls, WI 53052-0309
800 BRADLEY (800 272 3539) +1 262 251 6000
bradleycorp.com

TA6

2271

Towel Cabinet/Waste Receptacle

- ☐ **Model 2271 — Recessed**
- ☐ **Model 2271-10 — Semi-Recessed (recesses 3½"; projects 9⁵⁄₁₆")**
- ☐ **Model 2271-11 — Surface-Mounted (projects 12¹³⁄₁₆")**

☑ Standard Series — Satin Finish

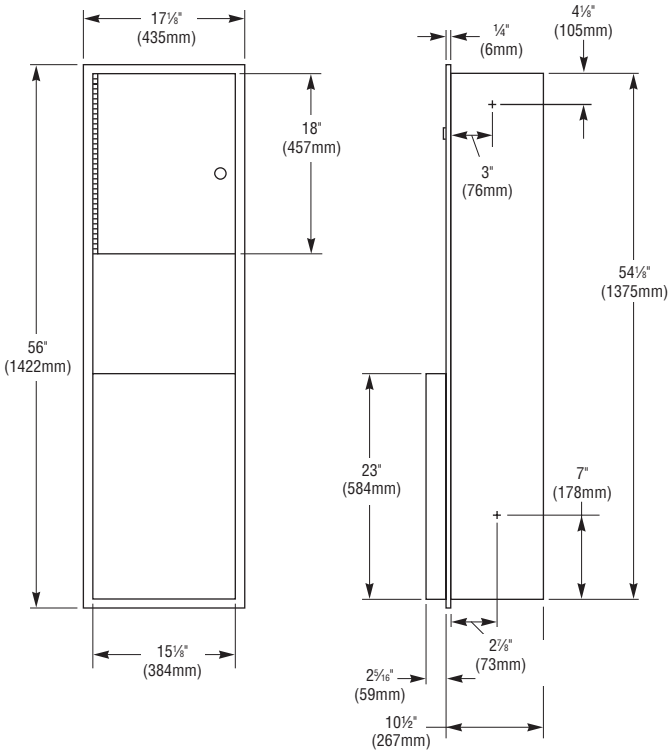

Product Materials

CABINET: 22 gauge stainless steel with exposed surfaces in architectural satin finish. Welded construction with seamless corners and burr-free edges.

FLANGE: 22 gauge stainless steel with exposed surfaces in architectural satin finish. One piece seamless construction, 1" wide with ¼" return.

DOOR: 18 gauge stainless steel with full length piano hinge and tumbler lock keyed like other Bradley units.

WASTE CONTAINER: 22 gauge stainless steel. All welded construction. Secured to cabinet with tumbler lock keyed like other Bradley units.

LINER (optional): heavy duty stitched vinyl coated nylon. Part number P11-001.

⚠ ***Dispenser not furnished with unit.***

Capacity

Waste Container — 18 gal. (2.5 cu. ft.)

Operation

Towel cabinet will accommodate paper roll or continuous cloth towels. **Dispenser not furnished with unit.** Receptacle removable for servicing by unlocking waste container. **Bradley recommends Model 2494, 2496 or 2497 with 2271. Must be ordered separately. 2494, 2496 or 2497 should be mounted so that usage graphics on dispenser are viewable just below door.**

Model 2271 consists of:

S08-249000000 Cabinet Assembly
S03-011000000 Waste Receptacle Assembly

Installation

Verify all rough-in dimensions prior to installation. Recessed unit requires rough wall opening 15¾"W x 54⅝"H x 10½"D (Semi-recessed unit only 3½" deep). Secure to framing with mounting screws (included) at holes provided. Shim at screw points as required. Surface-mounted units must have holes drilled by installer.

Guide Specification

Recessed combination towel dispenser and waste receptacle shall be fabricated of 22 gauge stainless steel with exposed surfaces in satin finish. Towel cabinet door equipped with piano hinge and secured by tumbler lock. Towel cabinet to accommodate paper roll or continuous cloth towels. Dispenser not furnished by Bradley. Removable 18-gal. stainless steel waste receptacle. Reusable vinyl liner is available separately (part no. P11-001).

Overall dimensions: 17⅛"W x 56"H x 12¹³⁄₁₆"D.

This information is subject to change without notice.

© 2014 Bradley
P.O. Box 309, Menomonee Falls, WI 53052-0309
800 BRADLEY (800 272 3539) +1 262 251 6000
bradleycorp.com

Model 584 — Recessed *Bradex*®

- [x] 500 Capacity

Product Materials

FLANGE: 22 gauge stainless steel with exposed surfaces in architectural satin finish. One-piece seamless construction, 1" wide with burr-free beveled edges.

CABINET: 22 gauge stainless steel with exposed surfaces in architectural satin finish. Welded construction with burr-free edges.

DOOR: 22 gauge stainless steel with full-length piano hinge and tumbler lock keyed like other Bradley units.

Capacity

500 standard single-fold or half-fold toilet seat covers.

Operation

Front of cabinet door hinged for easy servicing of unit.

Installation

Verify all rough-in dimensions prior to installation. Requires rough wall opening 15¾"W x 11⅜"H x 2¾"D. Secure to framing with mounting screws (included) at holes provided. Shim at screw points as required.

Guide Specification

Recessed toilet seat cover dispenser shall be fabricated of 22 gauge stainless steel with exposed surfaces in satin finish. Door with piano hinge and tumbler lock. Capacity 500 toilet seat covers.

Overall dimensions: 17⅛"W x 12¾"H x 2¾"D.

Product Compliance

- ICC ANSI A117.1, Citation 609.3

- [x] Consult local and national accessibility codes for proper installation guidelines.
- [x] Conformity and compliance to local and national codes is the responsibility of the installer.

View Latest Version

© 2021 Bradley
P.O. Box 309, Menomonee Falls, WI 53052-0309
800 BRADLEY (800 272 3539) +1 262 251 6000
bradleycorp.com

Dimensions (mm)

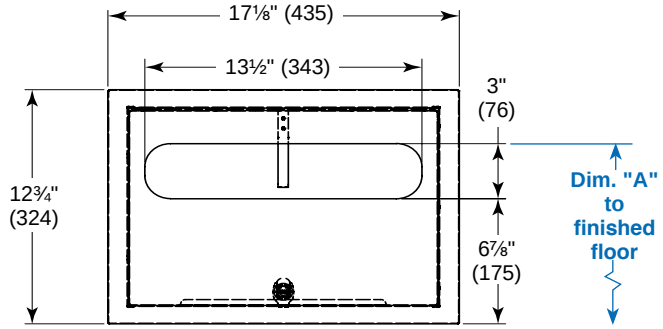

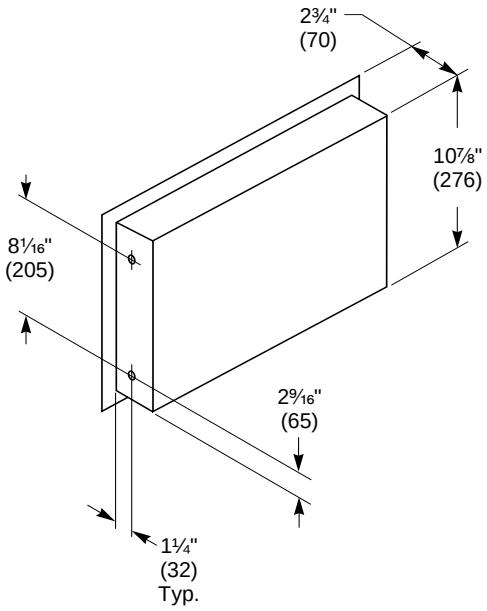

Dim. "A" Key Surface:	For Dim. "A"	Top of Rough Wall Opening	Bottom of Rough Wall Opening
Top of seat cover opening to finished floor	48" (1219)	49½" (1257)	38⅛" (968)
	45" (1143)	46½" (1181)	35⅛" (892)
	42" (1067)	43½" (1105)	32⅛" (816)
	40" (1016)	41½" (1054)	30⅛" (765)
Rough wall opening:			
Recessed:	15¾" (401) Wide x 11⅜" (289) High x 2¾" (70) Deep		

View Latest Version

© 2021 Bradley
P.O. Box 309, Menomonee Falls, WI 53052-0309
800 BRADLEY (800 272 3539) +1 262 251 6000
bradleycorp.com

TA8

6315

Sensor-Operated Soap Dispenser

- ☑ Reliable Battery Infrared Metering Activation
- ☑ LED Light Indicators for Low Battery & Low Soap Refill
- ☑ 5½" Spout
- ☑ ADA Compliant

☐ **Model 6315-KT0000 Starter Kit — *Bradex®***

☑ Includes Model 6315 Soap Dispenser, One Bottle of Soap (1000-shot) and Four Alkaline "D"-cell Batteries.

☐ **Model 6315 Soap Dispenser (only) — *Bradex®***

☑ Soap bottle not included. Must be ordered separately.

Product Materials

SPOUT ASSEMBLY: chrome-plated plastic. Has LED light indicators: Yellow flashing light = low battery. Red flashing light = low soap.

MOTOR ASSEMBLY: plastic. Soap cartridge size is set for 1000-shot (27-oz.) bottle. If using 2000-shot (54-oz.) bottle, move switch located under rubber plug (by red reset button) to 2K. Once soap cartridge is installed, press refill reset button (red). This will automatically prime the soap refill bottle and initiate counting mechanism.

BATTERY BOX: plastic, holds 4 "D"-cell alkaline batteries included with Starter Kit 6315-KT0000.

Operation

Place hands under soap spout and hold for approximately two seconds. Spout will dispense lotion soap with moisturizer.

Soap Refills

Bradley offers lotion soap with moisturizer. 1000-shot bottle (P19-232B) or 2000-shot bottle (P19-232A) in case quantity only (4 bottles per case). Soap has a two-year shelf life. Date on bottom of bottle is expiration date. ***Bottles are not refillable.***

Installation

Verify all rough-in dimensions prior to installation. Mount dispenser in 1" diameter hole in lavatory or countertop 1½" from edge of sink. Shank will accommodate a maximum counter thickness of 2". Place (4) "D"-cell alkaline batteries (included in Starter Kit) into battery box. Plug battery box into motor assembly. Remove white clip from bottom of spout assembly. Insert soap bottle supply tube through spout assembly. Twist and lock soap bottle onto bottom of spout assembly. Attach white clip to bottom of spout assembly and top of soap bottle. Press and release reset (red) button located on spout assembly.

Guide Specification

Sensor-operated soap dispenser spout assembly shall be fabricated of chrome-plated plastic and have LED indicators for low soap and low battery. Soap dispenser shall be able to dispense 0.027-oz. of lotion soap with moisturizer.

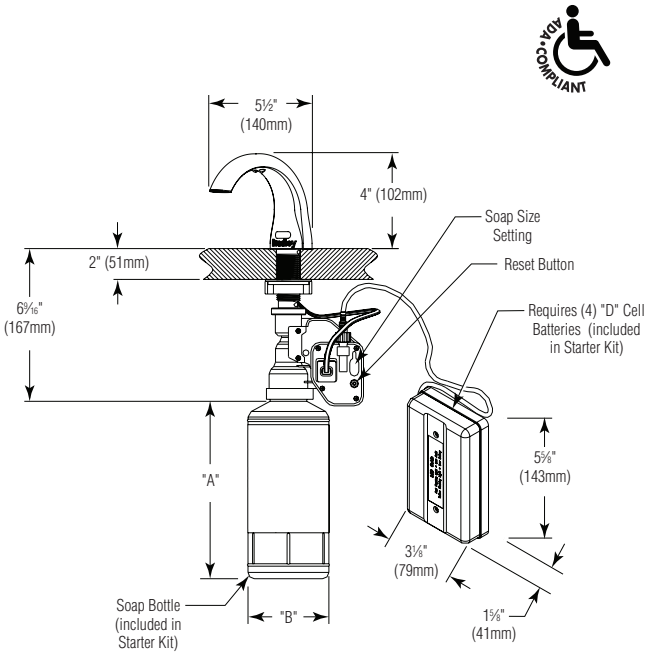

SOAP BOTTLE REFILL DIMENSIONS		
Capacity	**A**	**B**
27 oz. 1000 shots	9" (299 mm)	3¼" (83 mm)
54 oz. 2000 shots	10½" (267 mm)	4¹⁄₁₆" (103 mm)

ADA Compliant

- ☑ Consult local and national accessibility codes for proper installation guidelines.
- ☑ Conformity and compliance to local and national codes is the responsibility of the installer.

Orders composed of products indicated as ***Bradex®*** will be available to ship in three days after receipt of order at the factory. There is no pricing penalty for this service from Bradley.

This information is subject to change without notice.

Bradley_SoapDispenser_6315

© 2017 Bradley

P.O. Box 309, Menomonee Falls, WI 53052-0309
800 BRADLEY (800 272 3539) +1 262 251 6000
bradleycorp.com

Sensor-Operated Soap Dispenser — Additional Parts for Purchase

✔ For models manufactured after 8/24/07 only. Old units must be replaced with a new complete model 6315.

Feature	Suffix
SOAP:	
☐ 1000 shot or 27 oz. Lotion soap with Moisturizer	P19-232B
☐ 2000 shot or 54 oz. Lotion soap with Moisturizer	P19-232A
AC ADAPTOR:	
☐ Single soap dispenser adapter	P19-231F
☐ Adaptor for up to 4 dispensers (need P19-231H for each dispenser)	P19-231G
☐ Wire assembly (to be used with P19-231G which requires 1 of these for each dispenser to be hooked up. Up to 4 per P19-231G adapter).	P19-231H

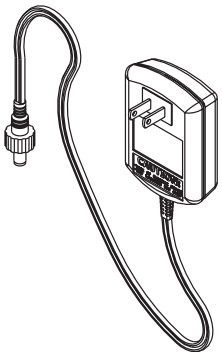

P19-231F
(AC Adaptor for single soap dispenser)

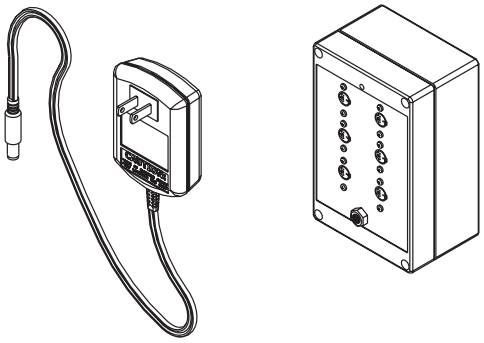

P19-231G (72" cord length)
(AC adaptor for up to 4 soap dispensers)

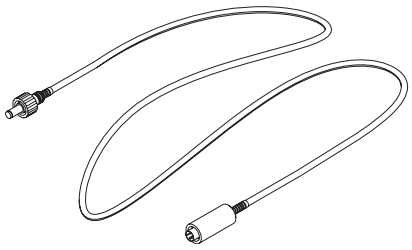

P19-231H (63" cord length)
(Wire assembly)

Note: Need 1 for each dispenser to be connected to P19-231G. Max 4 P19-231H to every P19-231G.

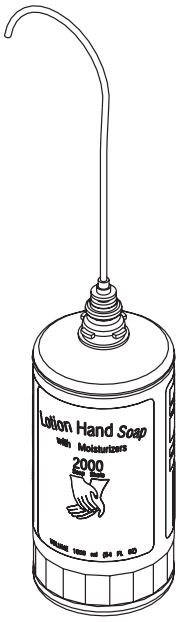

P19-232A
54 oz., 2000 shot

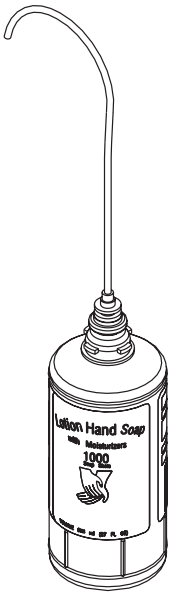

P19-232B
27 oz., 1000 shot

Lotion Soap with Moisturizer sold in case quantity — 4 bottles per case.

Orders composed of products indicated as **Bradex**® will be available to ship in three days after receipt of order at the factory. There is no pricing penalty for this service from Bradley.

This information is subject to change without notice.

© 2017 Bradley
P.O. Box 309, Menomonee Falls, WI 53052-0309
800 BRADLEY (800 272 3539) +1 262 251 6000
bradleycorp.com

TA9

9933, 9934

Utility Shelf

- ◯ Model 9933 – 4 Hooks/3 Holders ***Bradex®***
- ◯ Model 9934 – 5 Hooks/4 Holders

Product Materials

SHELF AND BRACKET: 18 gauge stainless steel with exposed surfaces in architectural satin finish.

HOOKS: 14 gauge stainless steel

HOLDERS: spring-activated rubber cams on plated steel retainers. Will hold a mop or broom handle with a diameter between 5/8" and 1".

Operation

Weight of mop or broom holds handle in place.

Installation

Verify all rough-in dimensions prior to installation. Secure to wall with mounting screws (included) at holes provided.

Guide Specification

Surface mounted utility shelf shall be fabricated of 18 gauge stainless steel in satin finish. Hooks shall be of 14 gauge stainless steel. Holders shall be with spring-activated rubber cams.

Dimensions (mm)

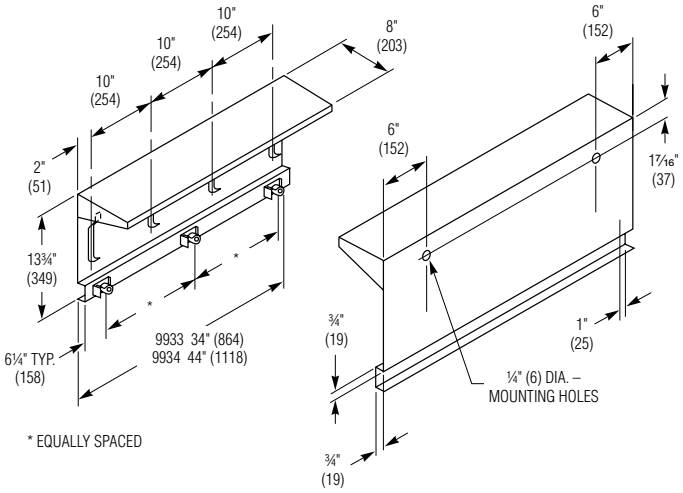

Orders composed of products indicated as ***Bradex®*** will be available to ship in three days after receipt of order at the factory. There is no pricing penalty for this service from Bradley.

View Latest Version

This information is subject to change without notice.

Bradley_UtilityShelf_9933_34

© 2021 Bradley

P.O. Box 309, Menomonee Falls, WI 53052-0309
800 BRADLEY (800 272 3539) +1 262 251 6000
bradleycorp.com

TA10

250-15

Towel Dispenser

☐ Model 250-15 — Surface-Mounted
Bradex®

- ☑ C-Fold/Multi-Fold Towels
- ☑ Tumbler Lock

Product Materials

UNIT: 22 gauge stainless steel with exposed surfaces in architectural satin finish. Smooth corners, free of burrs and sharp edges. Tumbler lock keyed like other Bradley units. Cabinet hinged at bottom to allow easy filling. Refill indicator slot on face of cabinet. Rolled edge on dispenser opening.

Capacity

525 multi-fold or 400 C-fold paper towels.

Operation

Unit holds multi-fold or C-fold towels without use of special adapter.

Installation

Verify all rough-in dimensions prior to installation. Secure to wall with mounting screws (not included) at holes provided. Mounting kit (#899-027) available through Bradley. Visit bradleycorp.com for more information. Provide in-wall backing at mounting screw locations.

Guide Specification

Surface-mounted towel dispenser shall be fabricated of type heavy duty, 22 gauge stainless steel with exposed surfaces in satin finish. Refill indicator on face of cabinet. Tumbler lock to secure hinged front panel. Towel dispenser capacity 525 multi-fold or 400 C-fold towels.

Overall dimensions: 11"W x 15$\frac{5}{16}$"H x 4"D.

ADA Compliant

- ☑ Consult local and national accessibility codes for proper installation guidelines.
- ☑ Conformity and compliance to local and national codes is the responsibility of the installer.

Optional Features

Feature	Suffix
☐ Polished Stainless Steel	-78

Orders composed of products indicated as **Bradex®** will be available to ship in three days after receipt of order at the factory. There is no pricing penalty for this service from Bradley.

This information is subject to change without notice.

© 2014 Bradley
P.O. Box 309, Menomonee Falls, WI 53052-0309
800 BRADLEY (800 272 3539) +1 262 251 6000
bradleycorp.com

TA11

6562, 6562-73

Soap Dispensers

☐ Model 6562 – Liquid Soap *Bradex*®
☐ Model 6562-73 – Foam Soap *Bradex*®

- ☑ Tank Type Vertical
- ☑ Surface-Mounted
- ☑ ADA Compliant

Product Materials

Body: 20 gauge stainless steel with exposed surfaces in architectural satin finish.

Back: 20 gauge stainless steel; heliarc welded to the body.

Wall Plate: stainless steel.

Liquid Soap Dispenser: chrome-plated brass housing with ABS plastic mechanism.

Foam Soap Dispenser: chrome-plated ABS mechanism.

Capacity

40-oz. liquid or bulk foam soap.

Operation

Push-in valve dispenses measured amount of vegetable or coconut oil liquid soaps, synthetic detergents, antiseptic solutions or foam soap with less than 5 lbs. of force. Sight gauge indicates refill time. Locked filler top opens with special key provided.

☑ Bradley liquid soap valves operate best with any vegetable oil or coconut oil hand soap having a 10–15% soap concentration.

☑ Bradley foam soap valves work with majority of bulk foam soap.

Installation

Verify all rough-in dimensions prior to installation. Secure separate mounting bracket to wall. Slide dispenser into place and secure locking screw through filler hole.

Guide Specification

Surface-mounted soap dispenser shall be fabricated of 20 gauge satin finish stainless steel. Dispenser shall have completely concealed mounting, vandal-resistant filler hole cover and sight gauge. Push-in corrosion-resistant soap valve. Capacity: 40-oz. liqiod or bulk foam soap. Requires less than 5 lbs. of force to dispense soap.

Overall dimensions: 4-13/16"W x 8-1/4"H x 2-7/8"D.

Service Kits

Liquid Soap Valve - P15-408
Foam Soap Valve - P15-510

ADA Compliant

- ☑ Consult local and national accessibility codes for proper installation guidelines.
- ☑ Conformity and compliance to local and national codes is the responsibility of the installer.

Orders composed of products indicated as *Bradex*® will be available to ship in three days after receipt of order at the factory. There is no pricing penalty for this service from Bradley.

This information is subject to change without notice.

© 2018 Bradley
P.O. Box 309, Menomonee Falls, WI 53052-0309
800 BRADLEY (800 272 3539) +1 262 251 6000
bradleycorp.com

Dimensions

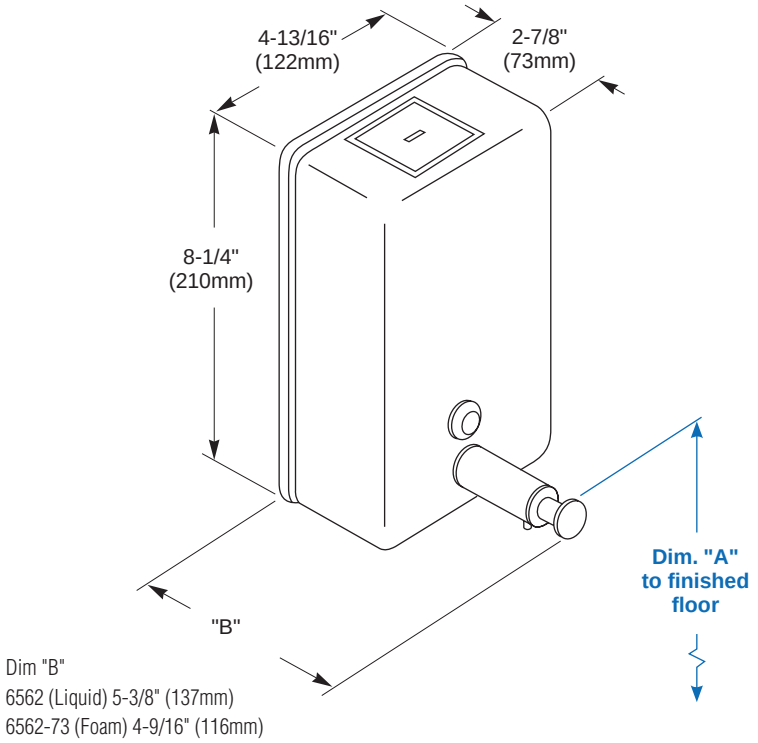

Dim. "A" Key Surface:	For Dim. "A"	Top of Unit	Bottom of Unit
Push button top to finished floor	40" (1016mm)	46¾" (1187mm)	38½" (978mm)
	38" (965mm)	44¾" (1137mm)	36½" (927mm)
	36" (914mm)	42¾" (1086mm)	34½" (876mm)
	34" (864mm)	40¾" (1035mm)	32½" (826mm)
Rough wall opening:			
Surface Mount:	No rough wall opening, see overall dimensions		

Orders composed of products indicated as **Bradex**® will be available to ship in three days after receipt of order at the factory. There is no pricing penalty for this service from Bradley.

This information is subject to change without notice.

© 2018 Bradley
P.O. Box 309, Menomonee Falls, WI 53052-0309
800 BRADLEY (800 272 3539) +1 262 251 6000
bradleycorp.com

Dimensions

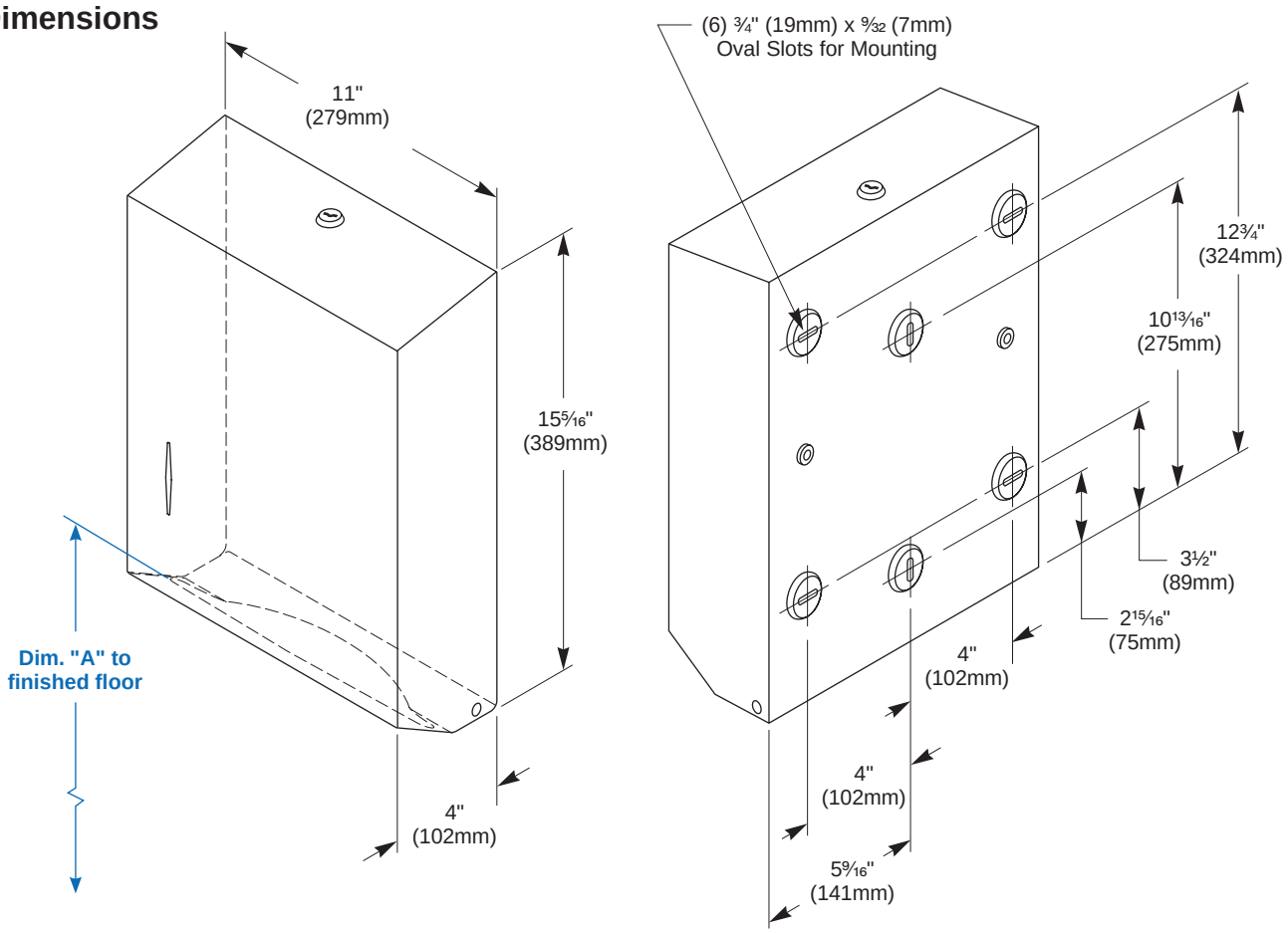

Dim. "A" Key Surface:	For Dim. "A"	Top of Rough Wall Opening	Bottom of Rough Wall Opening
Paper towel top of opening to finished floor	48" (1219mm)	62½" (1588mm)	47³⁄₁₆" (1199mm)
	45" (1143mm)	59½" (1511mm)	44³⁄₁₆" (1122mm)
	42" (1067mm)	56½" (1435mm)	41³⁄₁₆" (1046mm)
	40" (1016mm)	54½" (1384mm)	39³⁄₁₆" (995mm)
Rough wall opening:			
Surface Mount:	No rough opening, see overall dimensions		

Orders composed of products indicated as **Bradex**® will be available to ship in three days after receipt of order at the factory. There is no pricing penalty for this service from Bradley.

This information is subject to change without notice.

© 2014 Bradley
P.O. Box 309, Menomonee Falls, WI 53052-0309
800 BRADLEY (800 272 3539) +1 262 251 6000
bradleycorp.com

APPENDIX 2:

ARCHITECTURAL
WUFI ANALYSIS

Jacobs

WUFI Analysis

1100 North Glebe Road, Suite 500
Arlington, Virginia 22201
United States
T +1.571.218.1000
www.jacobs.com

Subject	**Hygrothermal Analysis Report**	**Project Name**	AJR – Terminal Facilities Modernization
From	Brian Ortiz		
Date	November 11, 2021		
Copies to	**Alan Flora & Elizabeth Floyd**		

1. Introduction

This report details the hygrothermal analysis conducted for the proposed roof assembly enclosure design of the Terminal Facilities Modernization project located in Warrenton, Virginia. Both moisture and temperature were modeled within the roof assembly with an effort to produce a dew point analysis and to identify potential areas of concern for condensation within the roof assembly. Recommendations to mitigate and/or minimize this risk are included.

2. Methodology

A hygrothermal analysis encompasses the study and modeling of the presence and behavior of moisture and temperature across a designed roof or wall assembly. The analysis discussed in this memo has been conducted using the modeling software WUFI Pro, Version 6.5, which was created by the Fraunhofer Institute for Building Physics. WUFI conducts a one-dimensional assessment across a single point of a built assembly by modeling thermal and moisture characteristics of the selected material layers, supported by a library of physical property and geolocated climate data. This tool can model and evaluate the flow, collection, and potential condensation of moisture across various materials within the assembly, providing graphical analysis of humidity, water content, temperature, and dewpoint.

Model simulations were conducted using a 5-year period, and initial humidity values for all materials are incorporated into the calculations. Moreover, some limitations of the model include that it cannot account for thermal bridging, potential air leakage, degradation rates of existing materials, limited software WUFI materials, and limited software weather data files.

2.1 Inputs – Conditions

2.1.1 Exterior Climate

Geolocated climate data available in WUFI is offered for cities across the world in order to provide specific and pertinent information with regards to seasonal temperature, solar exposure, rain amount and direction, etc. To conduct the most accurate model, the user selects the city with the nearest proximity/most similar weather to the actual building site. For this project, Baltimore, Maryland's datapoint was used.

2.1.2 Interior Climate

Standard prescribed settings for interior climate include enabling the linking of the exterior climate to the interior climate, and the selection of standardized options for interior RH ranges. Both steps have been incorporated into this model. Interior climate data used follows ASHRAE 160 Criteria for Moisture-Control Design Analysis in Buildings. The interior climate mechanical set points for air-condition is set to 68 degrees Fahrenheit for heating and 74 degrees Fahrenheit for cooling.

2.1.3 Assemblies

For this project, each of the roof assemblies have been modeled with and without a vapor retarder in order to conduct a comparative analysis on the potential benefits of its inclusion. Therefore, a total of four (4) roof assemblies have been modeled, and the results are included in this report. They are listed in the table below.

	Roof Assembly Name	Thickness	Material (exterior to interior)
01	Baseline Case 01 (Asphalt Vapor Barrier)	0.08" (80 mil)	TPO Membrane
		0.5"	Protection Board (Glass-mat, water-resistant gypsum)
		2.5"	Polyisocyanurate Board Insulation
		3.0"	Polyisocyanurate Board Insulation
		0.03" (30 mil)	SBS Asphalt Vapor Barrier
		0.625"	Substrate Board (Glass-mat, water-resistant gypsum)
		1.5"	Metal Deck Existing

	Roof Assembly Name	Thickness	Material (exterior to interior)
02	Case 02 (No Vapor Barrier)	0.08″ (80 mil)	TPO Membrane
		0.5″	Protection Board (Glass-mat, water-resistant gypsum)
		2.5″	Polyisocyanurate Board Insulation
		3.0″	Polyisocyanurate Board Insulation
		0.625″	Substrate Board (Glass-mat, water-resistant gypsum)
		1.5″	Metal Deck Existing

	Roof Assembly Name	Thickness	Material (exterior to interior)
03	Baseline Case 01 (3M Air and Vapor Barrier 3015)	0.08″ (80 mil)	TPO Membrane
		0.5″	Protection Board (Glass-mat, water-resistant gypsum)
		2.5″	Polyisocyanurate Board Insulation
		3.0″	Polyisocyanurate Board Insulation
		0.03″ (30 mil)	3M Air & Vapor Barrier 3015
		0.625″	Substrate Board (Glass-mat, water-resistant gypsum)
		1.5″	Metal Deck Existing

3. Results and Recommendations

3.1 Building Recommendations

The recommendation and descriptions are correlated to the WUFI report data for each assembly (Roof Case: 01, 02 & 03) included in this package.

While the inclusion of the vapor retarder does alter the behavior of moisture within the assembly, the model does not show any distinct advantage to justify its inclusion. There is potentially less separation between the dewpoint and the temperature with a vapor barrier included giving added potential for water build up or mold over extended periods time. However, inclusion of a vapor barrier will not fail the assembly, but the removal of the vapor barrier preforms better when analyzing the results. Given the graphic and data outputs from the model, the architect and design team should determine if there is a preferred expected behavior of moisture and humidity within the roof and adjust the design; accordingly, there is no recommendation to include an air or vapor barrier in the given roof assembly.

3.2 Overall conclusion

After analyzing the three studies there is no additional benefit for including the asphalt vapor barrier. In all three studies the overall total water content trends downward and are similar to each other with the exception of study (03) using a 3M Air and Vapor Barrier product. The reports include a water content breakdown by layer and have been outlined in red to illustrate the amount of water decreased or increased over the simulation's 5-year study.

Project Data

Project Name	AJR TPO ROOF
Project Number	D3286024
Client	
Contact Person	Brian Ortiz
City/Zip	Dallas
Street	1999 Bryan Street
Phone	
Fax	
e-mail	brian.ortiz@jacobs.com
Responsible	
Remarks	Climate weather file used Baltimore, Maryland.
Date	10/20/2021 8:20:27 AM

Cross Sectional Time-Line graph 5-Year span

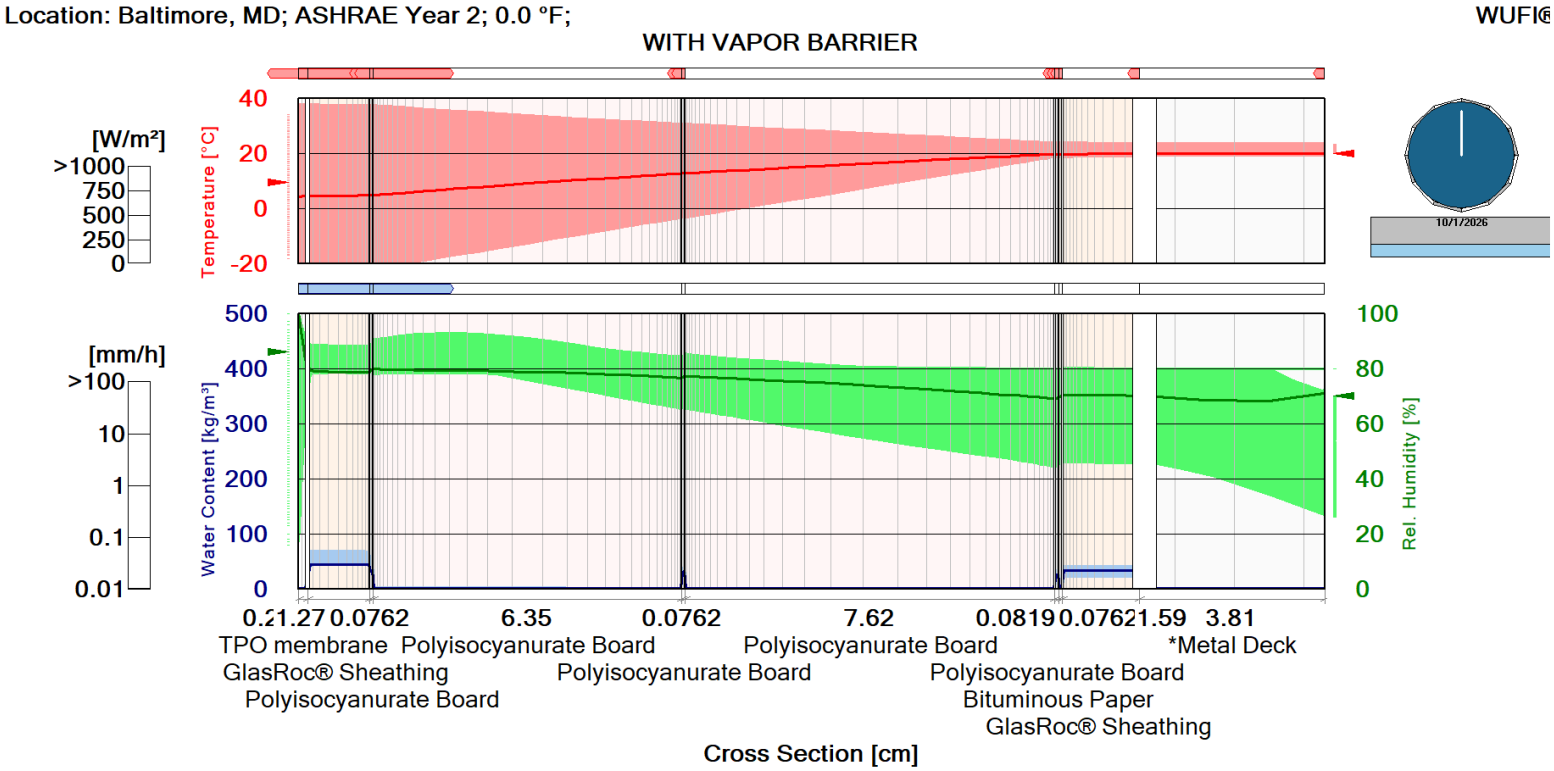

Component Assembly

Case: TPO ROOF WITH VAPOR BARRIER

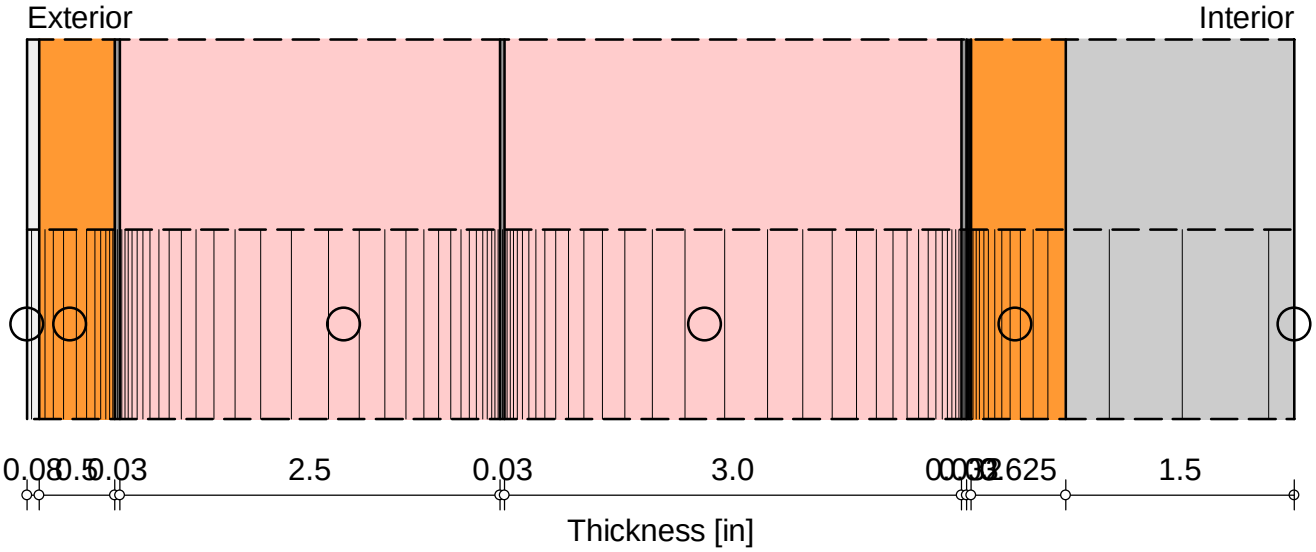

○ - Monitor positions

Materials:

- TPO membrane	0.08 in
- GlasRoc® Sheathing (1/2 inch)	0.5 in
- Polyisocyanurate Board, Glass-Matt Facer	0.03 in
- Polyisocyanurate Board	2.5 in
- Polyisocyanurate Board, Glass-Matt Facer	0.03 in
- Polyisocyanurate Board	3.0 in
- Polyisocyanurate Board, Glass-Matt Facer	0.032 in
- Bituminous Paper (#15 Felt)	0.03 in
- GlasRoc® Sheathing (5/8 inch)	0.625 in
- *Metal Deck	1.5 in

Total Thickness: 8.327 in
R-Value: 36.83 h ft² °F/Btu
U-Value: 0.026 Btu/h ft²°F

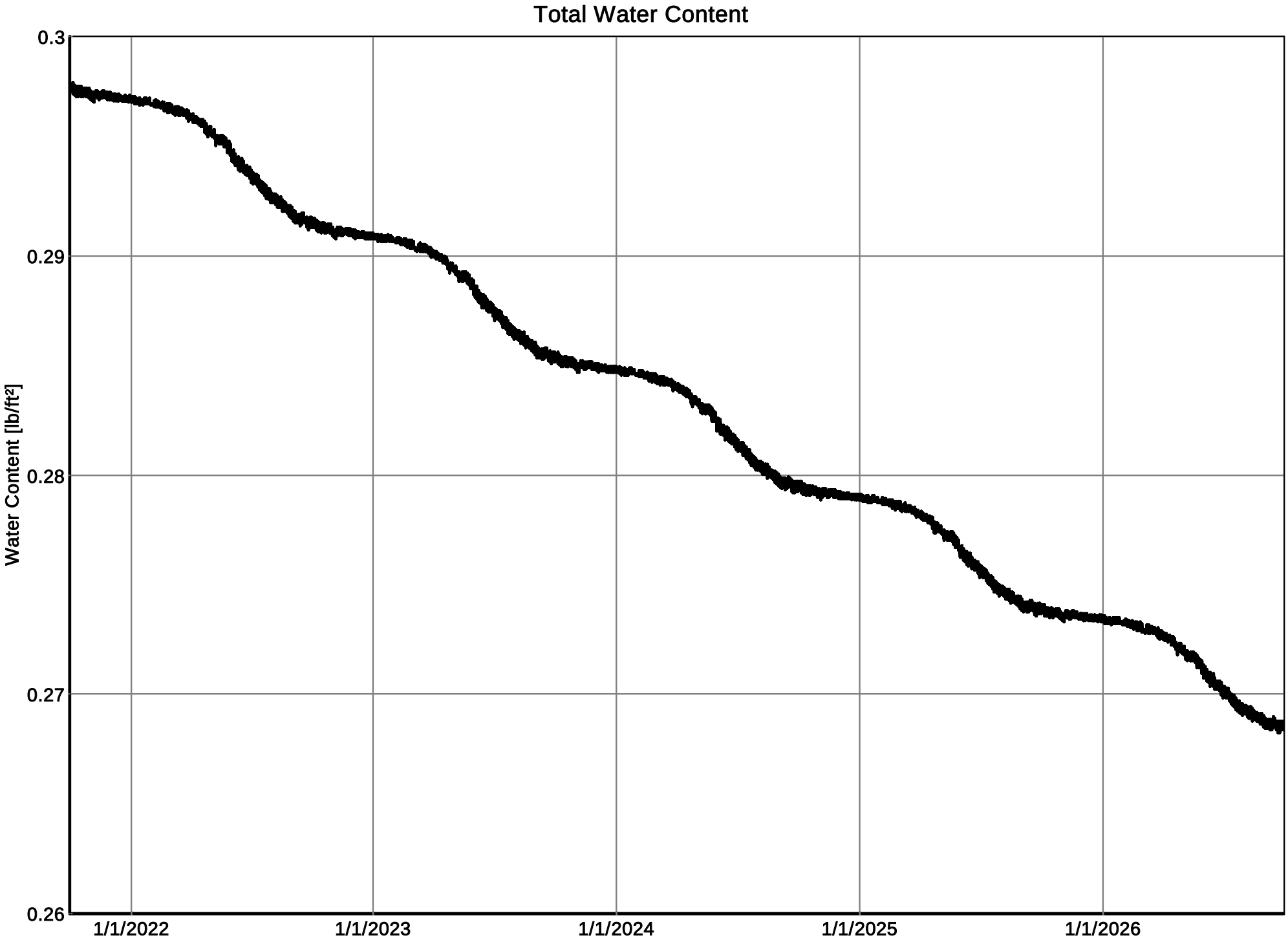

WUFI^ Pro 6.5; AJR_ROOF.w6p; Case 4: TPO ROOF WITH VAPOR BARRIER; 10/22/2021

Material: TPO membrane

Property	Unit	Value
Bulk density	[lb/ft³]	93.642
Porosity	[ft³/ft³]	0.001
Specific Heat Capacity, Dry	[Btu/lb°F]	0.3583
Thermal Conductivity, Dry, 50°F	[Btu/h ft°F]	0.1156
Permeability	[perm in]	0.0042
Temp-dep. Thermal Cond. Supplement	[Btu/h ft°F²]	6.42000E-5

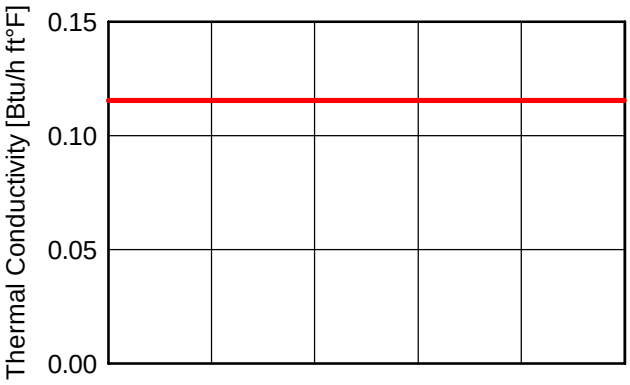

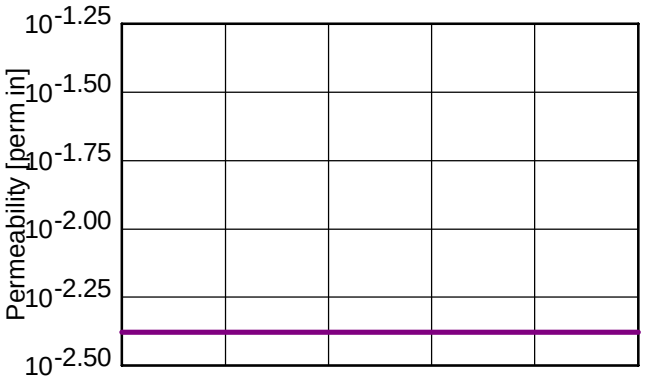

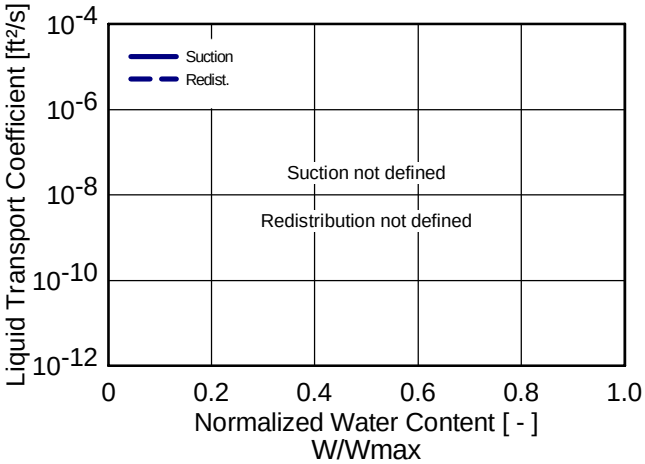

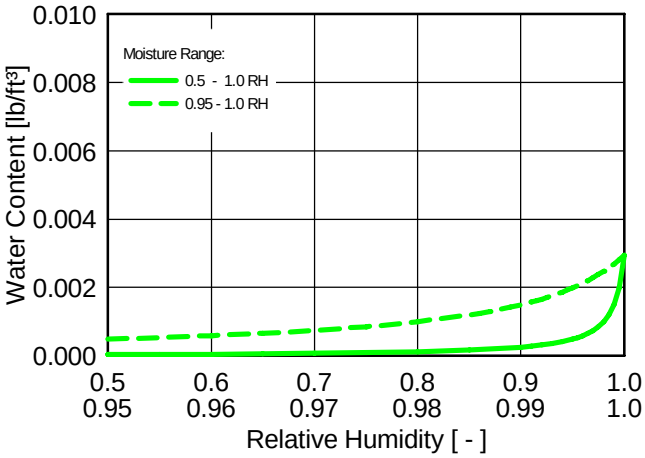

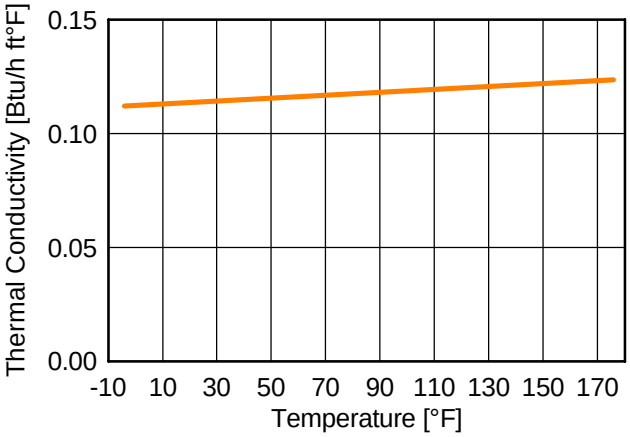

Material: GlasRoc® Sheathing (1/2 inch)

Property	Unit	Value
Bulk density	[lb/ft³]	45.57239
Porosity	[ft³/ft³]	0.65
Specific Heat Capacity, Dry	[Btu/lb°F]	0.203
Thermal Conductivity, Dry, 50°F	[Btu/h ft°F]	0.126
Permeability	[perm in]	27
Reference Water Content	[lb/ft³]	2.8
Free Water Saturation	[lb/ft³]	23.2
Water Absorption Coefficient	[lb/in²s^0.5]	6.21600E-7
Moisture-dep. Thermal Cond. Supplement	[%/M.-%]	8
Temp-dep. Thermal Cond. Supplement	[Btu/h ft°F²]	6.42000E-5
Thermal Conductivity, Design Value	[Btu/h ft°F]	0.020396

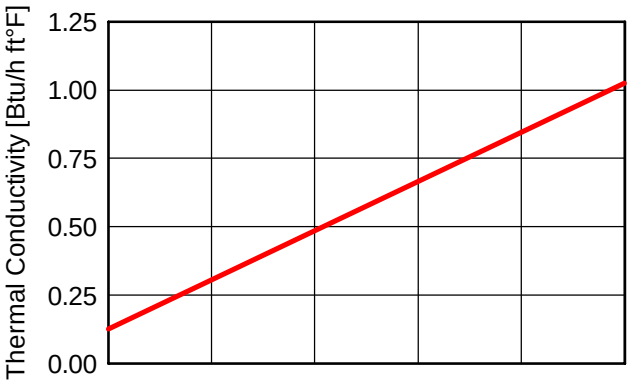

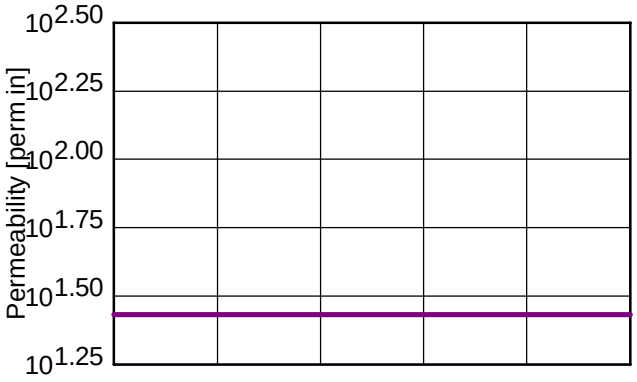

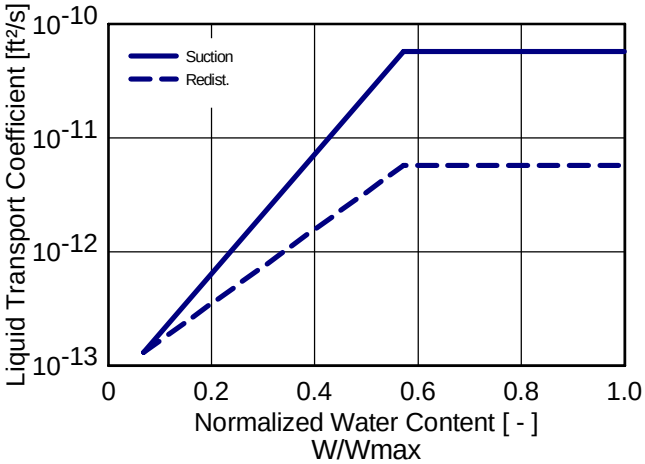

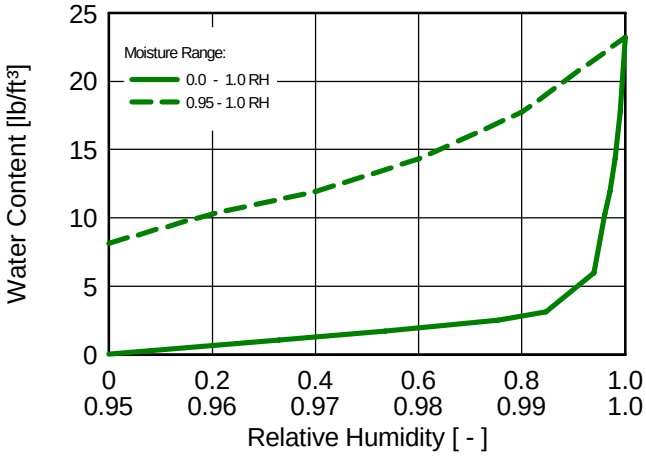

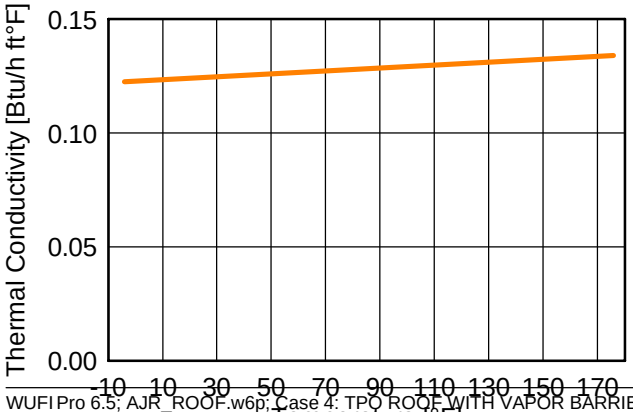

Material: Polyisocyanurate Board, Glass-Matt Facer

Property	Unit	Value
Bulk density	[lb/ft³]	27
Porosity	[ft³/ft³]	0.5
Specific Heat Capacity, Dry	[Btu/lb°F]	0.3583
Thermal Conductivity, Dry, 50°F	[Btu/h ft°F]	0.12
Permeability	[perm in]	0.267
Temp-dep. Thermal Cond. Supplement	[Btu/h ft°F²]	6.42000E-5

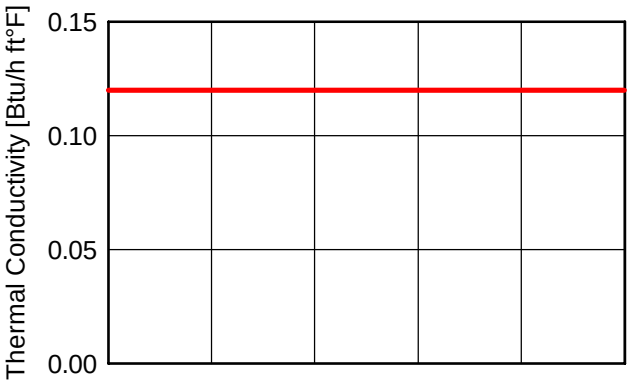

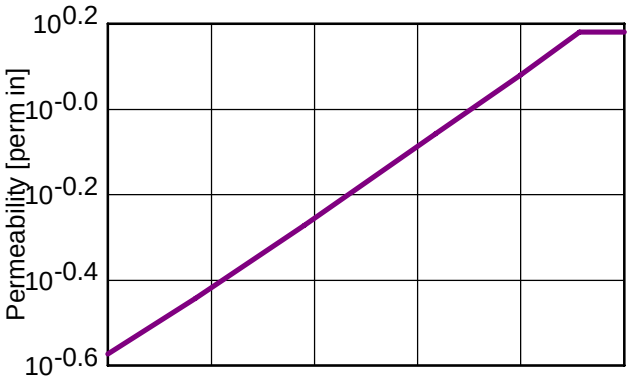

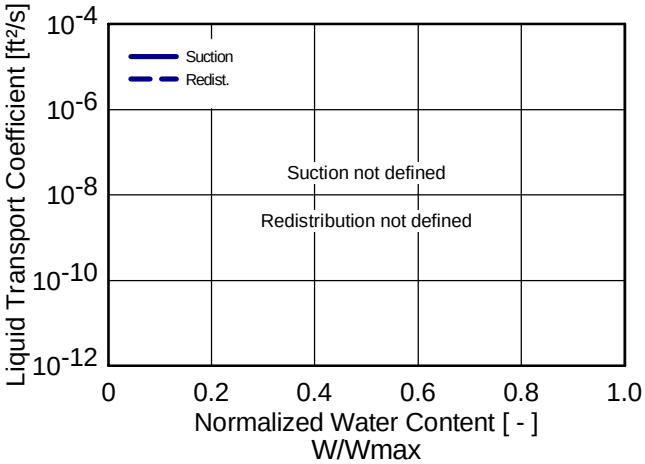

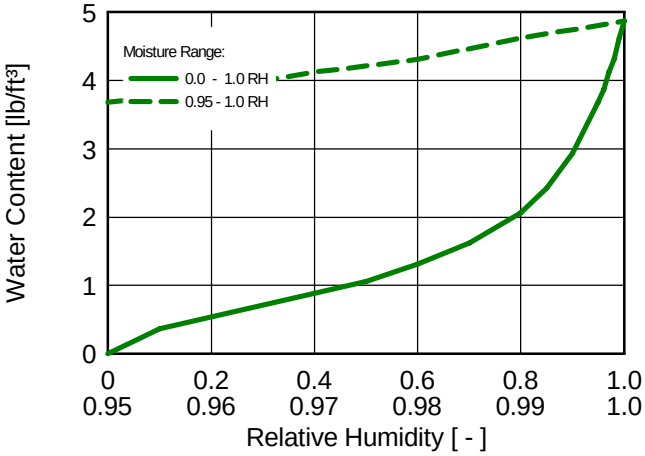

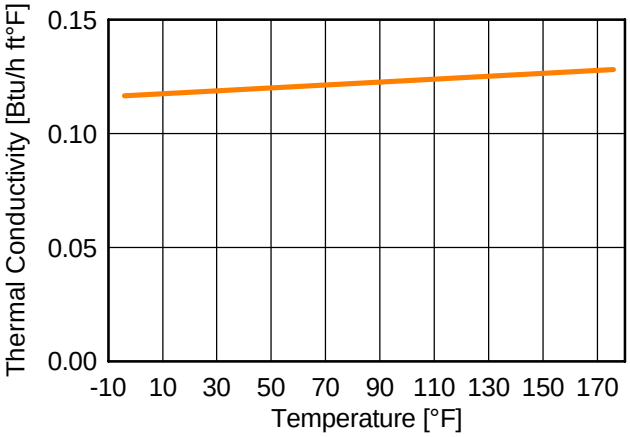

Material: Polyisocyanurate Board

Property	Unit	Value
Bulk density	[lb/ft³]	2.03
Porosity	[ft³/ft³]	0.99
Specific Heat Capacity, Dry	[Btu/lb°F]	0.3511
Thermal Conductivity, Dry, 50°F	[Btu/h ft°F]	0.01387
Permeability	[perm in]	1.8
Moisture-dep. Thermal Cond. Supplement	[%/M.-%]	0.7

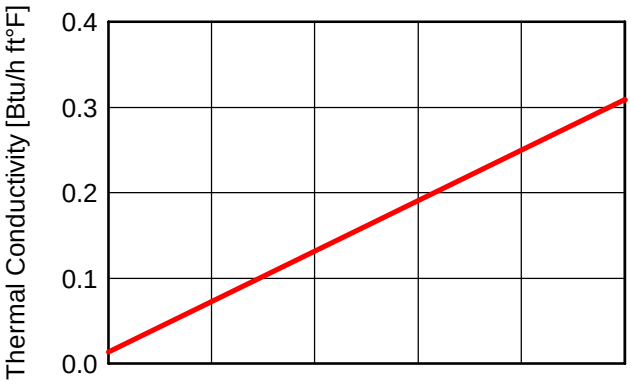

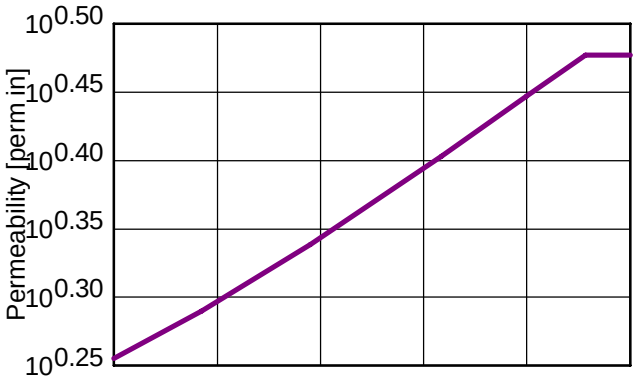

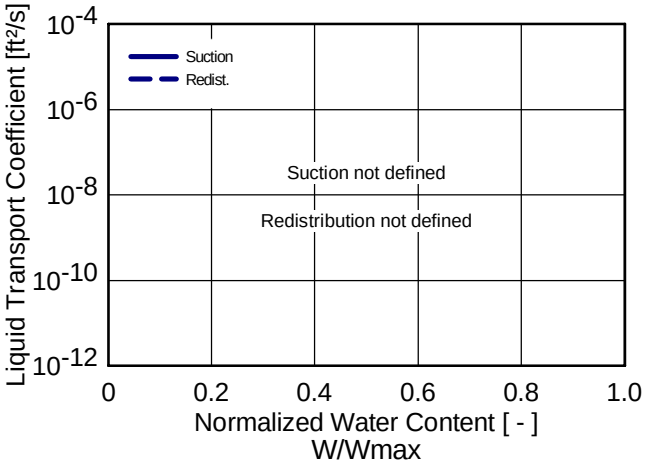

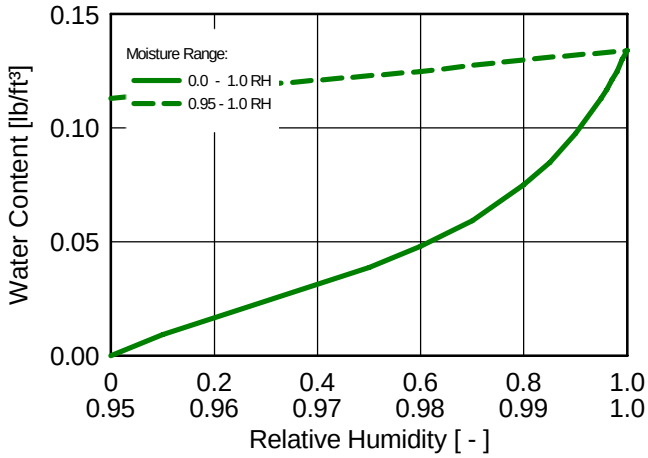

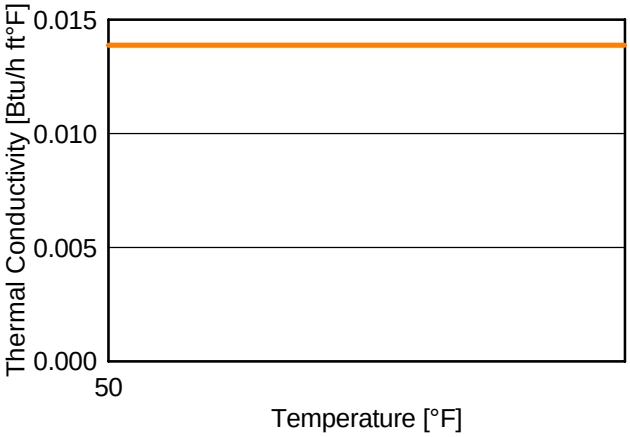

Material: Polyisocyanurate Board, Glass-Matt Facer

Property	Unit	Value
Bulk density	[lb/ft³]	27
Porosity	[ft³/ft³]	0.5
Specific Heat Capacity, Dry	[Btu/lb°F]	0.3583
Thermal Conductivity, Dry, 50°F	[Btu/h ft°F]	0.12
Permeability	[perm in]	0.267
Temp-dep. Thermal Cond. Supplement	[Btu/h ft°F²]	6.42000E-5

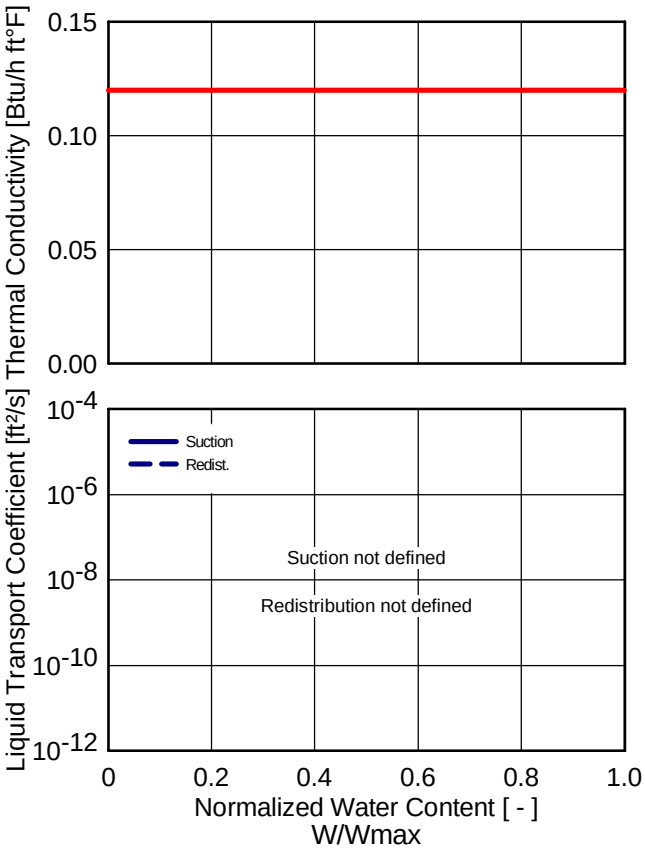

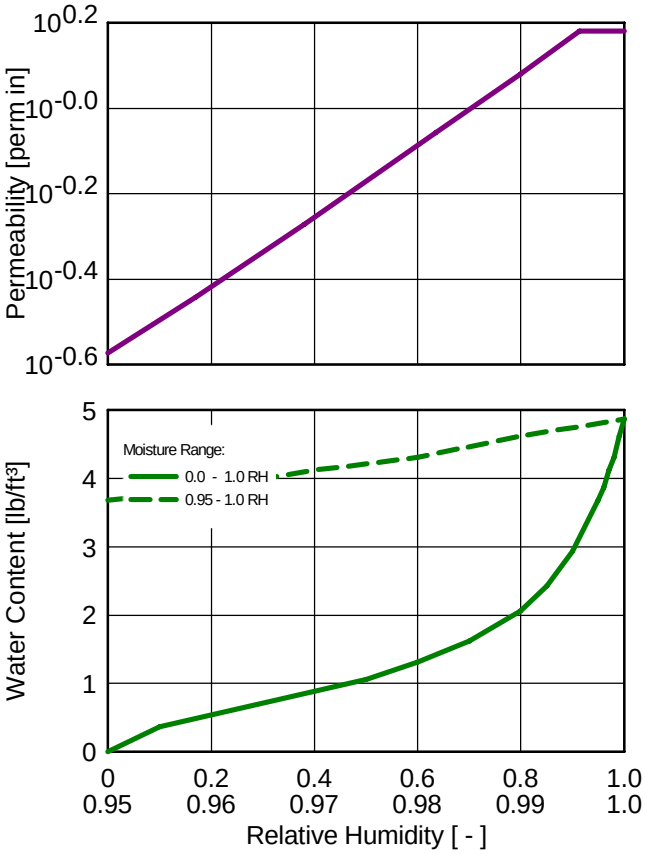

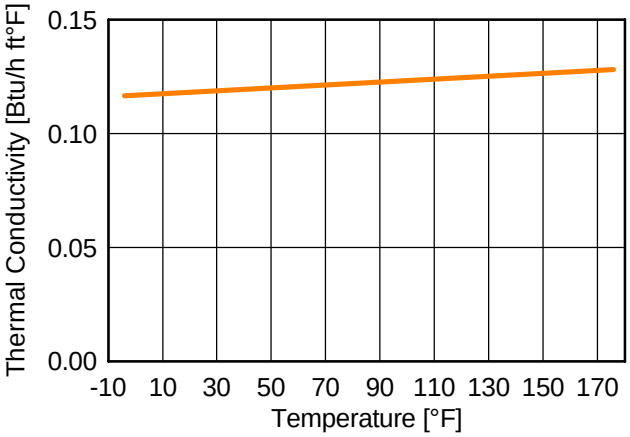

Material: Polyisocyanurate Board

Property	Unit	Value
Bulk density	[lb/ft³]	2.03
Porosity	[ft³/ft³]	0.99
Specific Heat Capacity, Dry	[Btu/lb°F]	0.3511
Thermal Conductivity, Dry, 50°F	[Btu/h ft°F]	0.01387
Permeability	[perm in]	1.8
Moisture-dep. Thermal Cond. Supplement	[%/M.-%]	0.7

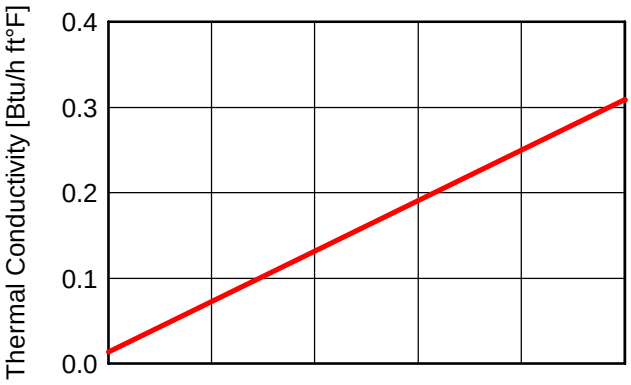

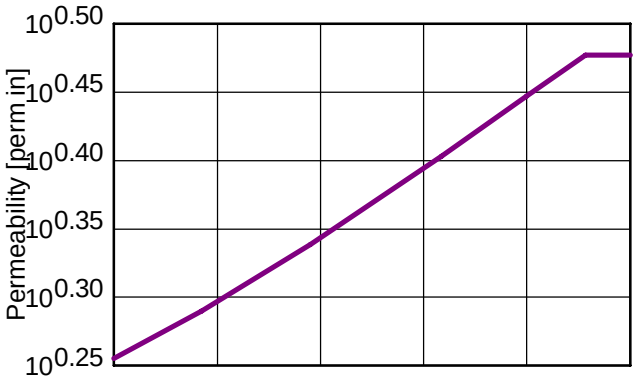

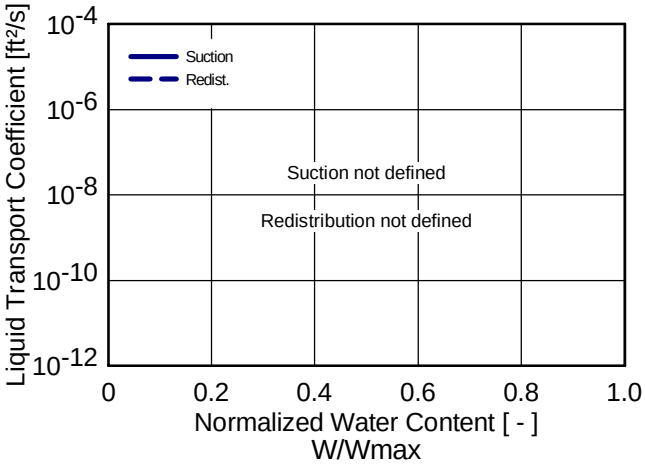

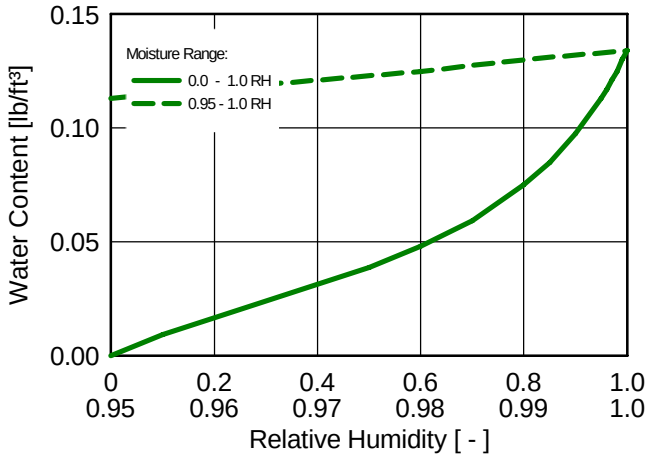

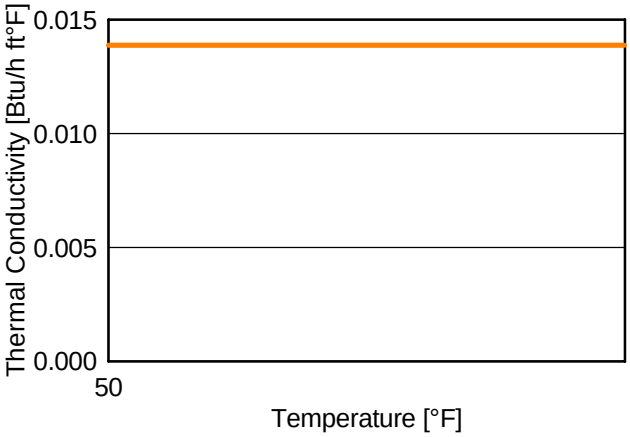

Material: Polyisocyanurate Board, Glass-Matt Facer

Property	Unit	Value
Bulk density	[lb/ft³]	27
Porosity	[ft³/ft³]	0.5
Specific Heat Capacity, Dry	[Btu/lb°F]	0.3583
Thermal Conductivity, Dry, 50°F	[Btu/h ft°F]	0.12
Permeability	[perm in]	0.267
Temp-dep. Thermal Cond. Supplement	[Btu/h ft°F²]	6.42000E-5

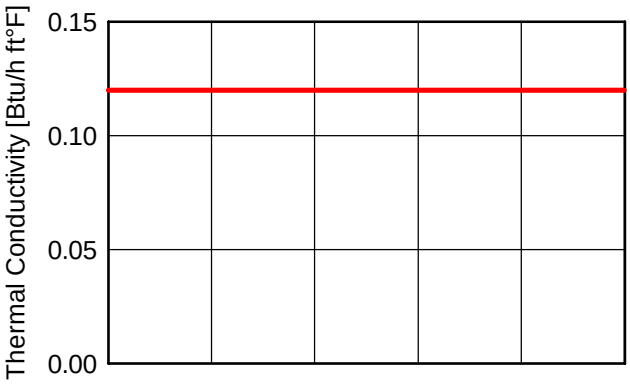

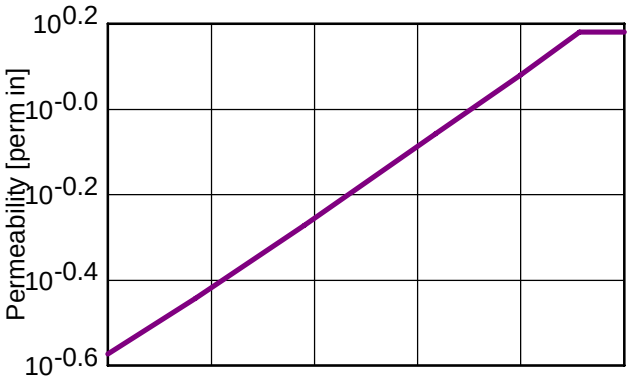

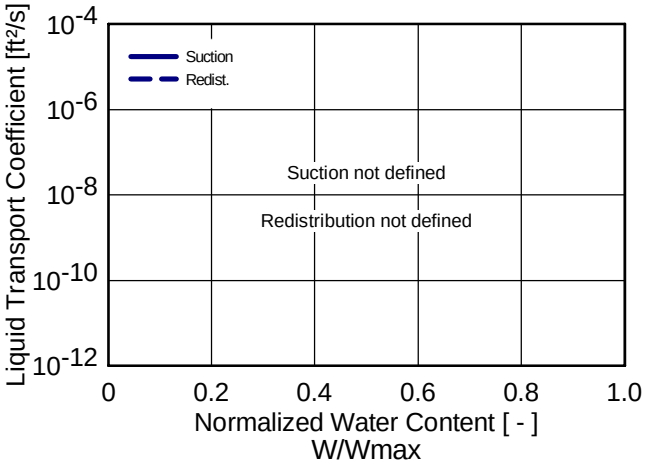

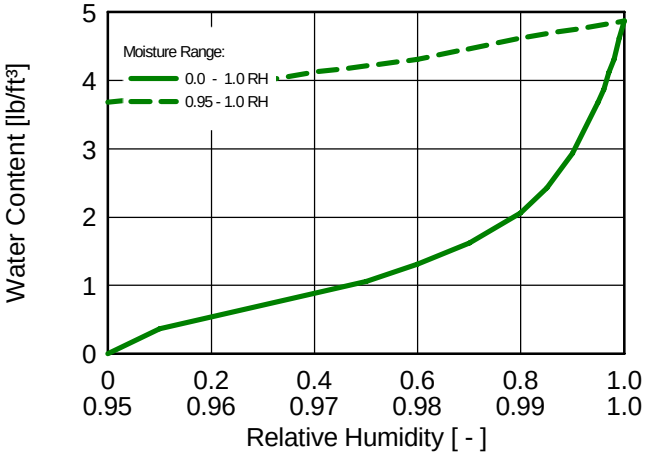

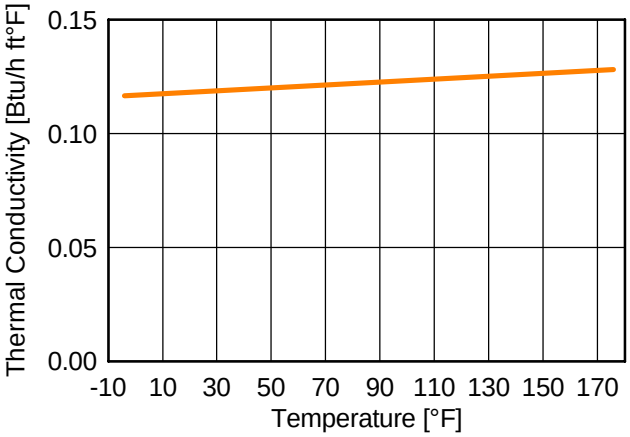

Material: Bituminous Paper (#15 Felt)

Property	Unit	Value
Bulk density	[lb/ft³]	44.6
Porosity	[ft³/ft³]	0.001
Specific Heat Capacity, Dry	[Btu/lb°F]	0.3583
Thermal Conductivity, Dry, 50°F	[Btu/h ft°F]	1.3
Permeability	[perm in]	0.12969
Temp-dep. Thermal Cond. Supplement	[Btu/h ft°F²]	6.42000E-5

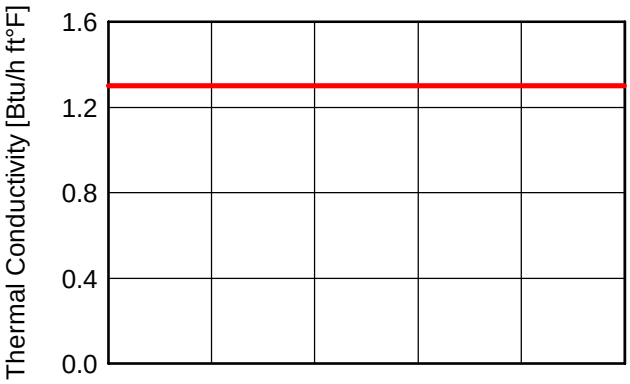

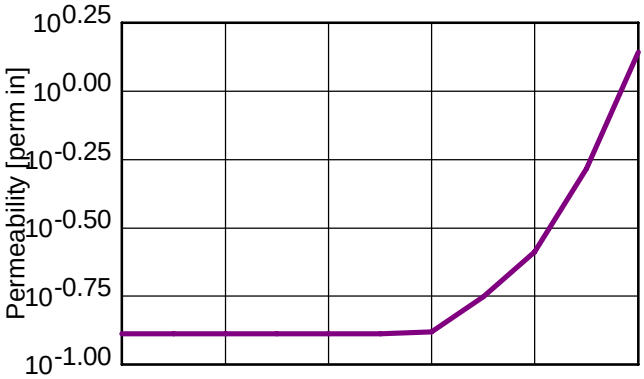

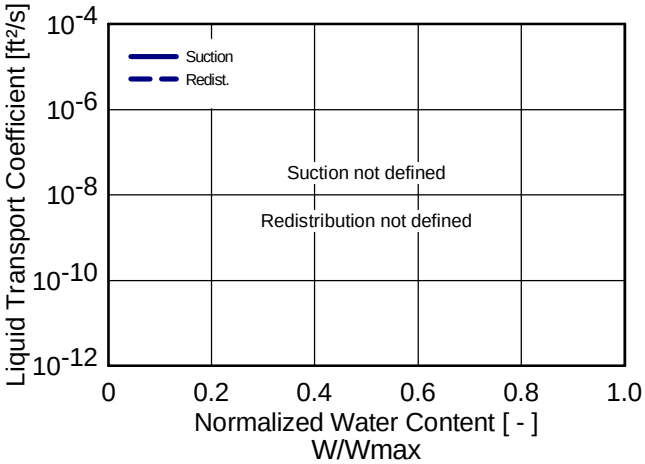

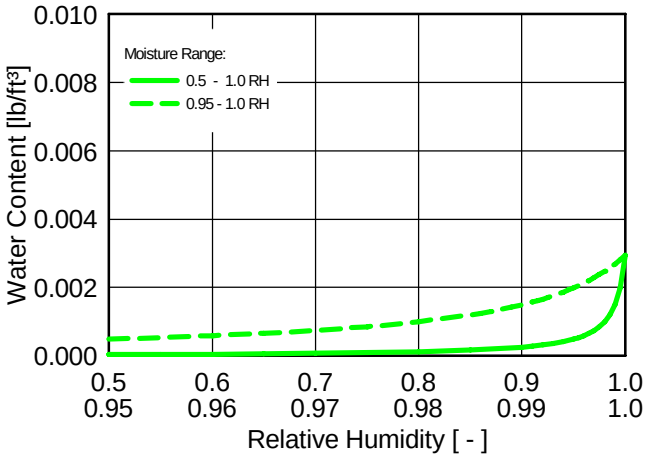

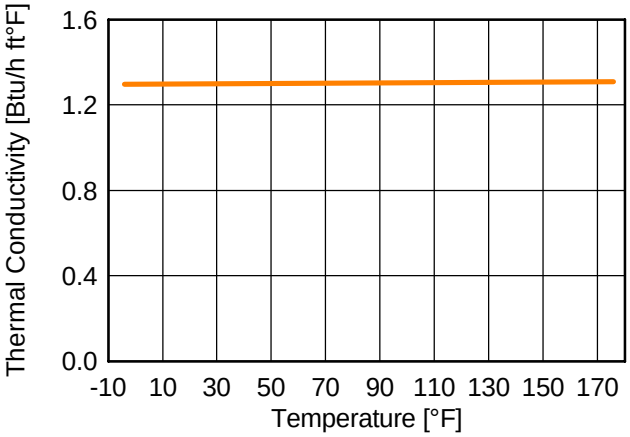

Material: GlasRoc® Sheathing (5/8 inch)

Property	Unit	Value
Bulk density	[lb/ft³]	44.5
Porosity	[ft³/ft³]	0.65
Specific Heat Capacity, Dry	[Btu/lb°F]	0.203
Thermal Conductivity, Dry, 50°F	[Btu/h ft°F]	0.126
Permeability	[perm in]	28
Reference Water Content	[lb/ft³]	2.5
Free Water Saturation	[lb/ft³]	22.5
Water Absorption Coefficient	[lb/in²s^0.5]	1.10000E-6
Moisture-dep. Thermal Cond. Supplement	[%/M.-%]	8
Temp-dep. Thermal Cond. Supplement	[Btu/h ft°F²]	6.42000E-5
Thermal Conductivity, Design Value	[Btu/h ft°F]	0.021263

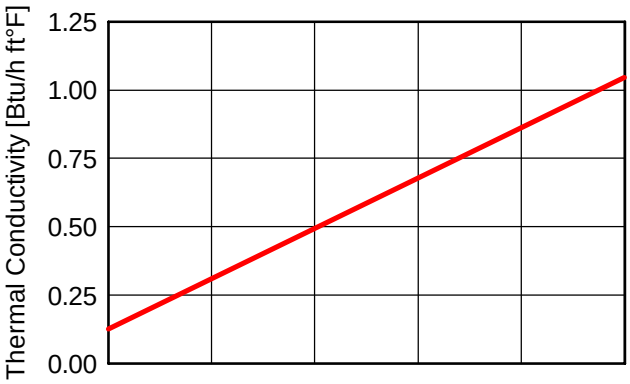

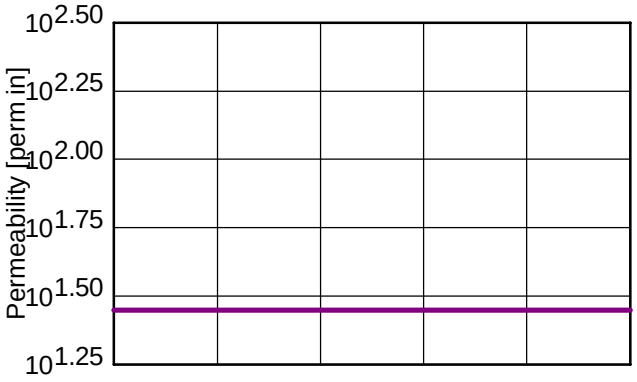

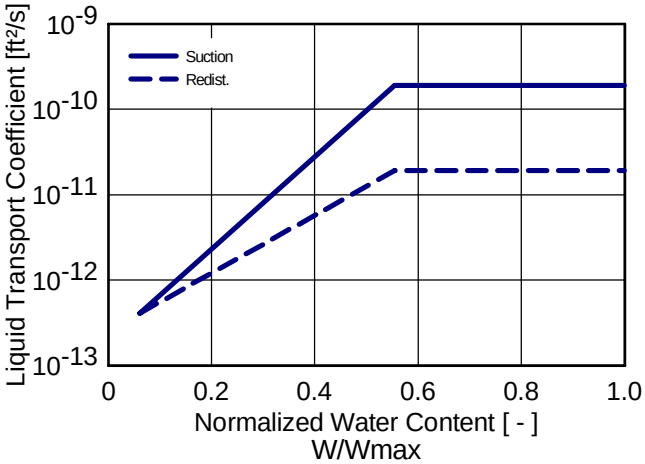

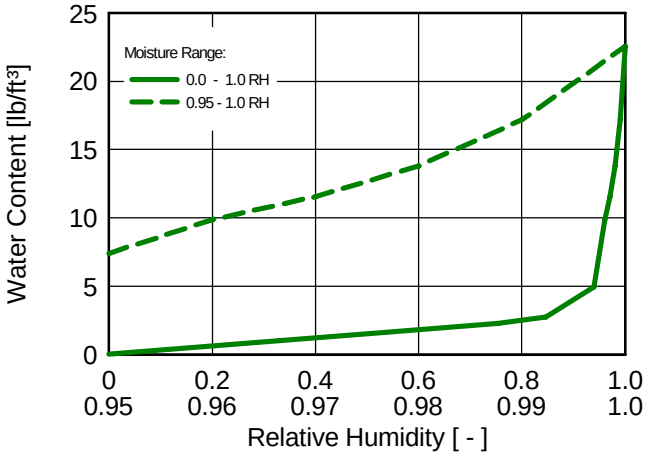

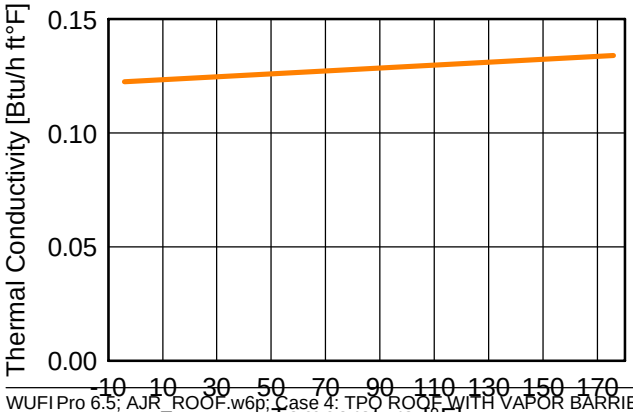

Material: *Metal Deck

Property	Unit	Value
Bulk density	[lb/ft³]	8.1156
Porosity	[ft³/ft³]	0.001
Specific Heat Capacity, Dry	[Btu/lb°F]	0.5493
Thermal Conductivity, Dry, 50°F	[Btu/h ft°F]	96.4909
Permeability	[perm in]	0.0039
Temp-dep. Thermal Cond. Supplement	[Btu/h ft°F²]	6.42000E-5

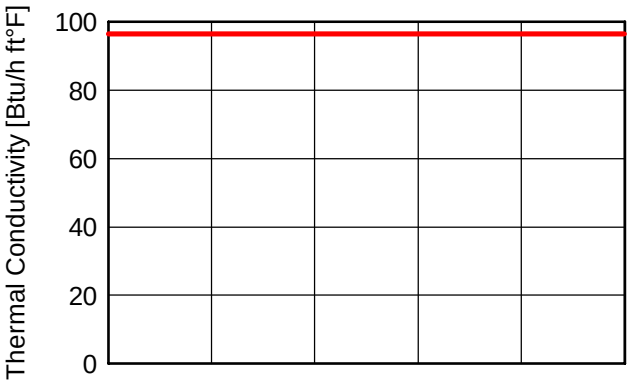

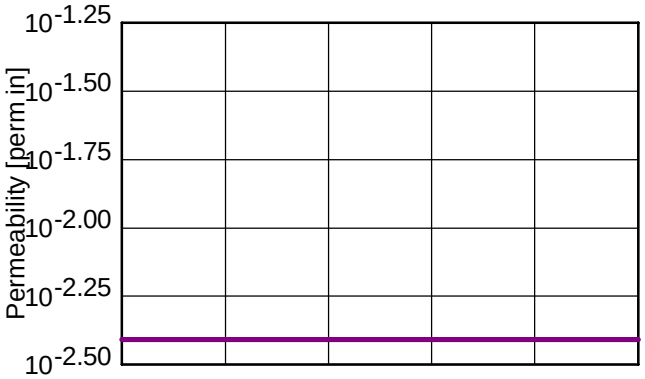

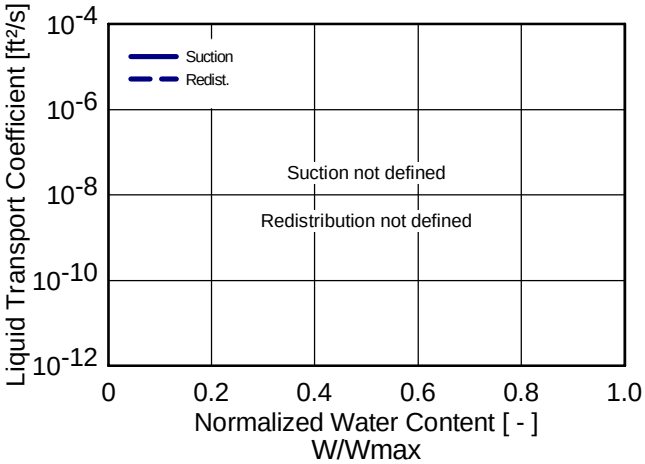

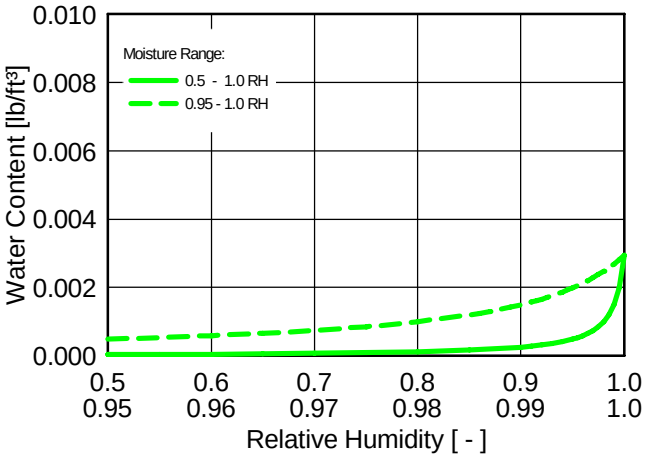

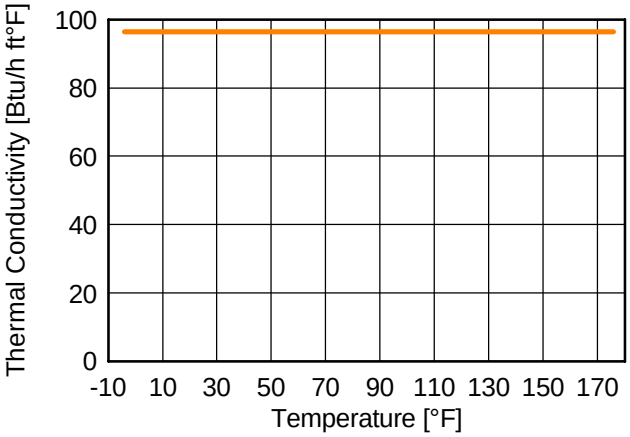

Boundary Conditions

Exterior (Left Side)

Location: Baltimore, MD; ASHRAE Year 2
Temperature Shift: 0.0 °F
Orientation / Inclination: North-East / 0 °

Interior (Right Side)

Indoor Climate: ASHRAE 160P
Air-conditioning; 5.04 °F; 68 °F; 74 °F
M.Rate 0.83 lb/h; A.Ch.Rate 0.2 1/h; Vol. 17657.3333 ft³
Humidity Ratio Wo -1.0000 lb/lb

Surface Transfer Coefficients

Exterior (Left Side)

Name	Description	Unit	Value
Heat Resistance - includes long-wave radiation	Roof (DIN 68800-2:2012-02)	[h ft² °F/Btu]	0.2987 yes
Permeance	No coating	[perm]	----
Short-Wave Radiation Absorptivity	Bright	[-]	0.2
Long-Wave Radiation Emissivity	Bright	[-]	0.9
Adhering Fraction of Rain	Depending on inclination o	[-]	1.0
Explicit Radiation Balance			yes
Terrestrial Short-Wave Reflectivity		[-]	0.2
Terrestrial Long-Wave Emissivity		[-]	0.9
Terrestrial Long-Wave Reflectivity		[-]	0.1
Cloud Index		[-]	0.66

Interior (Right Side)

Name	Description	Unit	Value
Heat Resistance	Roof (DIN 68800-2:2012-02)	[h ft² °F/Btu]	0.7098
Permeance	No coating	[perm]	----

Results from Last Calculation

Status of Calculation

Calculation: Time and Date	10/22/2021 4:48:12 AM
Computing Time	5 min,24 sec.
Begin / End of calculation	10/1/2021 / 10/1/2026
No. of Convergence Failures	0

Check for numerical quality

Integral of fluxes, left side (kl,dl)	[lb/ft²]	0.0 -0.03
Integral of fluxes, right side (kr,dr)	[lb/ft²]	0.0 0.0
Balance 1	[lb/ft²]	-0.03
Balance 2	[lb/ft²]	-0.03

Water Content [lb/ft²]

	Start	End	Min.	Max.
Total Water Content	0.3	0.27	0.27	0.3

Water Content [lb/ft³]

Layer/Material	Start	End	Min.	Max.
TPO membrane	0.00	0.03	0.00	0.03
GlasRoc® Sheathing (1/2 inch)	2.81	2.73	2.71	4.24
Polyisocyanurate Board, Glass-Matt F	2.06	2.02	1.99	2.80
Polyisocyanurate Board	0.07	0.07	0.07	0.10
Polyisocyanurate Board, Glass-Matt F	2.06	1.92	1.49	2.39
Polyisocyanurate Board	0.08	0.06	0.04	0.08
Polyisocyanurate Board, Glass-Matt F	2.06	1.59	0.97	2.06
Bituminous Paper (#15 Felt)	0.00	0.00	0.00	0.00
GlasRoc® Sheathing (5/8 inch)	2.50	2.10	1.39	2.50
*Metal Deck	0.00	0.00	0.00	0.00

Time Integral of fluxes

Heat Flux, left side	[Btu/ft²]	1.9E+0005
Heat Flux, right side	[Btu/ft²]	-23654.21
Moisture Fluxes, left side	[lb/ft²]	34.59
Moisture Fluxes, right side	[lb/ft²]	0.0

Hygrothermal Sources

Hygrothermal Sources (Continue)

Heat Sources	[Btu/ft²]	0.0
Moisture Sources	[lb/ft²]	0.0
Unreleased Moisture Sources (due to cut-off)	[lb/ft²]	0.0

Project Data

Project Name	AJR TPO ROOF
Project Number	D3286024
Client	
Contact Person	Brian Ortiz
City/Zip	Dallas
Street	1999 Bryan Street
Phone	
Fax	
e-mail	brian.ortiz@jacobs.com
Responsible	
Remarks	Climate weather file used Baltimore, Maryland.
Date	10/20/2021 8:20:27 AM

Cross Sectional Time-Line graph 5-Year span

Location: Baltimore, MD; ASHRAE Year 2; 0.0 °F;

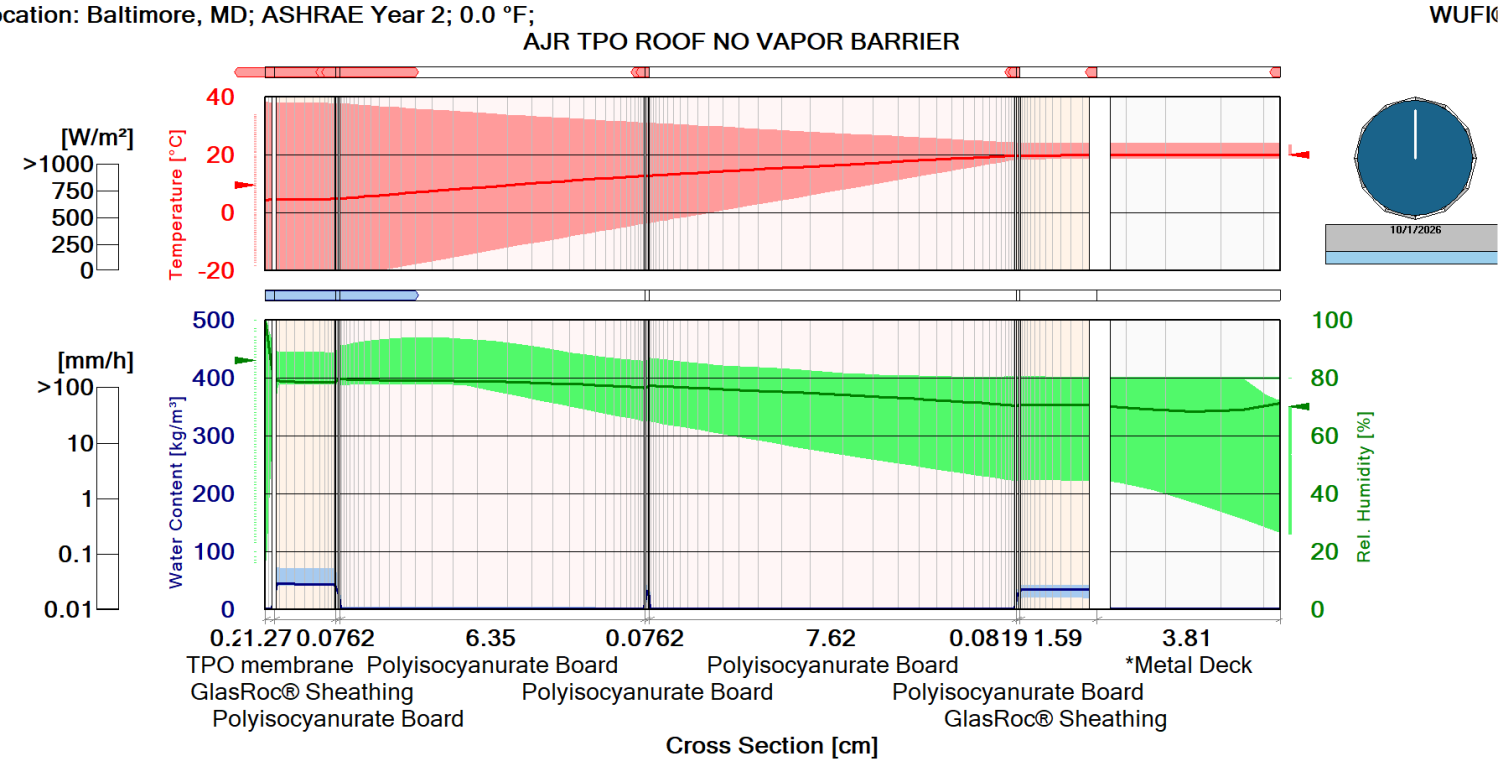

Component Assembly

Case: TPO ROOF NO VAPOR BARRIER

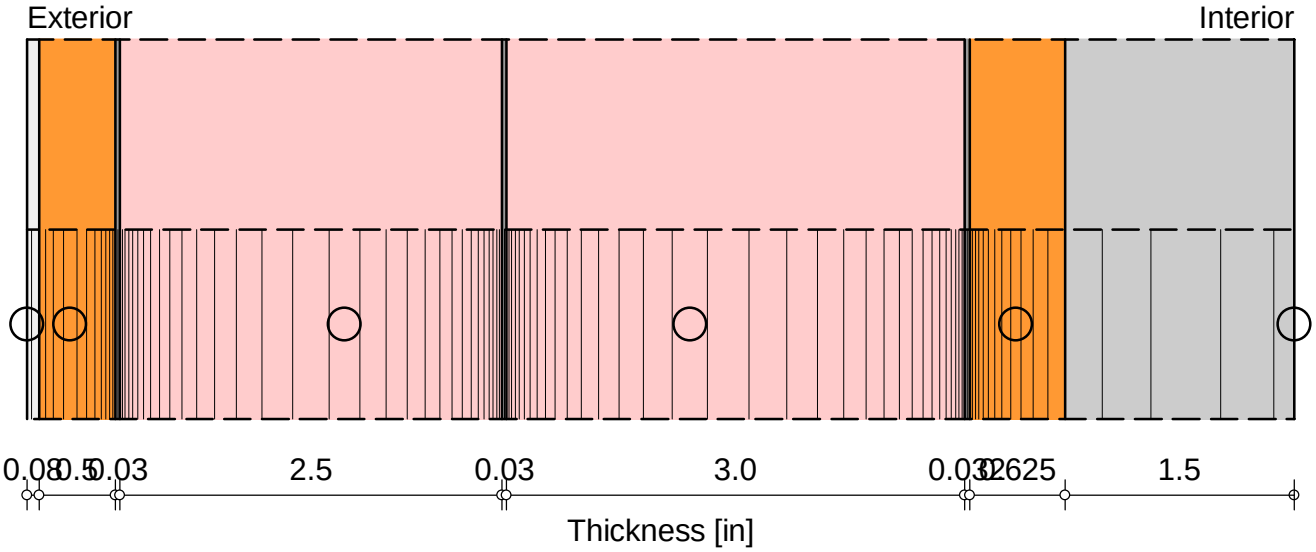

○ - Monitor positions

Materials:

- TPO membrane	0.08 in
- GlasRoc® Sheathing (1/2 inch)	0.5 in
- Polyisocyanurate Board, Glass-Matt Facer	0.03 in
- Polyisocyanurate Board	2.5 in
- Polyisocyanurate Board, Glass-Matt Facer	0.03 in
- Polyisocyanurate Board	3.0 in
- Polyisocyanurate Board, Glass-Matt Facer	0.032 in
- GlasRoc® Sheathing (5/8 inch)	0.625 in
- *Metal Deck	1.5 in

Total Thickness: 8.297 in
R-Value: 36.83 h ft² °F/Btu
U-Value: 0.026 Btu/h ft²°F

WUFI^ Pro 6.5; AJR_ROOF.w6p; Case 2: TPO ROOF NO VAPOR BARRIER; 10/22/2021

WUFI Pro 6.5

Material: TPO membrane

Property	Unit	Value
Bulk density	[lb/ft³]	93.642
Porosity	[ft³/ft³]	0.001
Specific Heat Capacity, Dry	[Btu/lb°F]	0.3583
Thermal Conductivity, Dry, 50°F	[Btu/h ft°F]	0.1156
Permeability	[perm in]	0.0042
Temp-dep. Thermal Cond. Supplement	[Btu/h ft°F²]	6.42000E-5

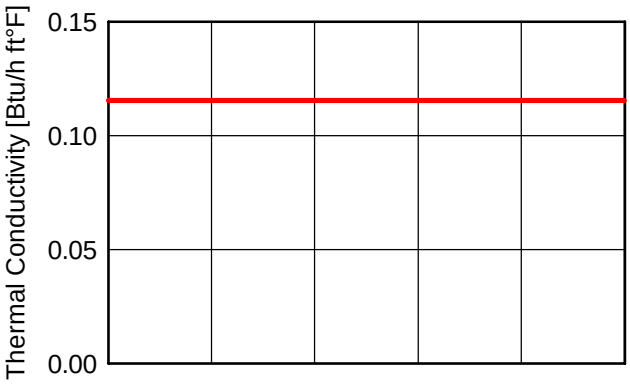

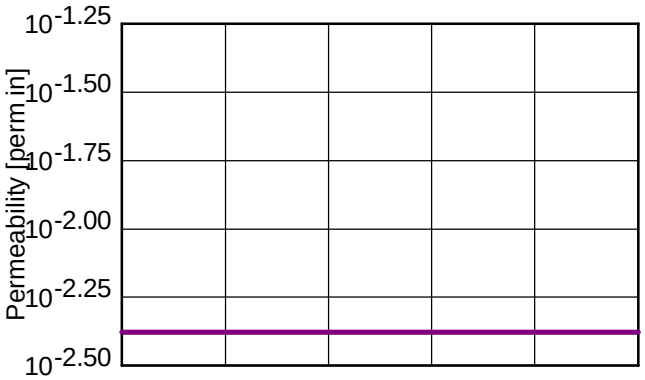

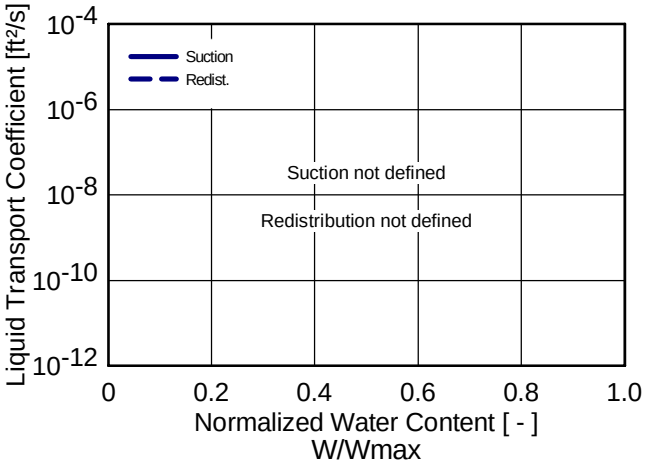

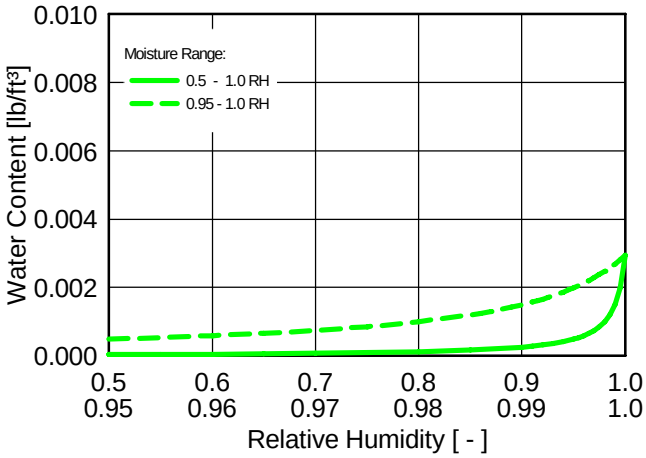

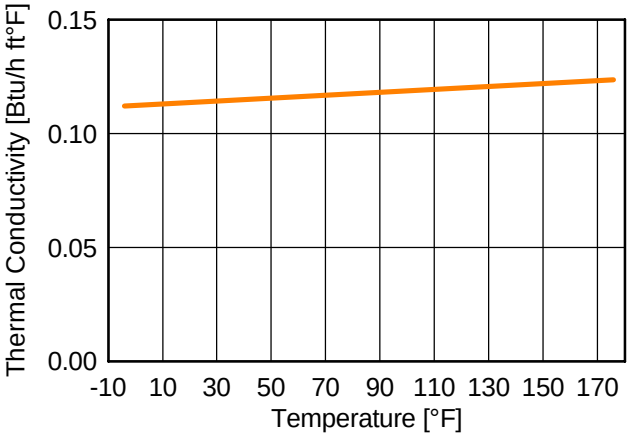

Material: GlasRoc® Sheathing (1/2 inch)

Property	Unit	Value
Bulk density	[lb/ft³]	45.57239
Porosity	[ft³/ft³]	0.65
Specific Heat Capacity, Dry	[Btu/lb°F]	0.203
Thermal Conductivity, Dry, 50°F	[Btu/h ft°F]	0.126
Permeability	[perm in]	27
Reference Water Content	[lb/ft³]	2.8
Free Water Saturation	[lb/ft³]	23.2
Water Absorption Coefficient	[lb/in²s^0.5]	6.21600E-7
Moisture-dep. Thermal Cond. Supplement	[%/M.-%]	8
Temp-dep. Thermal Cond. Supplement	[Btu/h ft°F²]	6.42000E-5
Thermal Conductivity, Design Value	[Btu/h ft°F]	0.020396

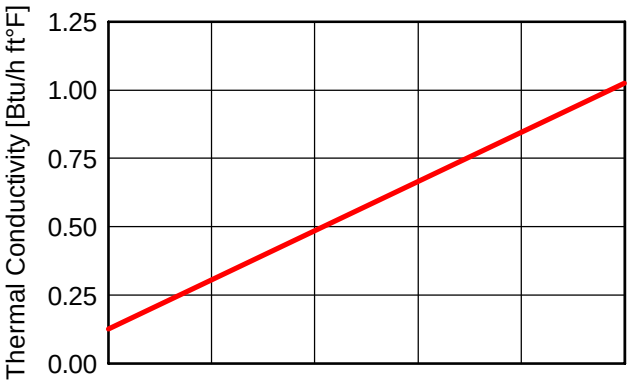

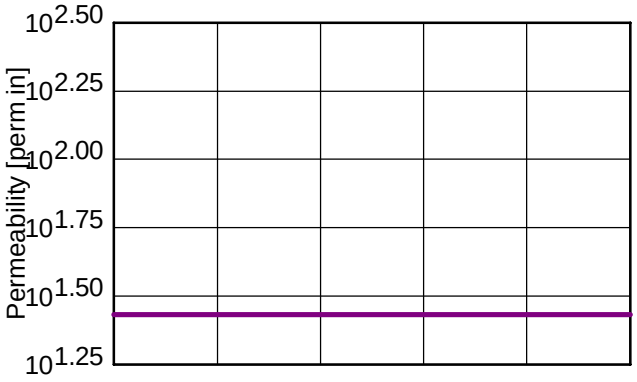

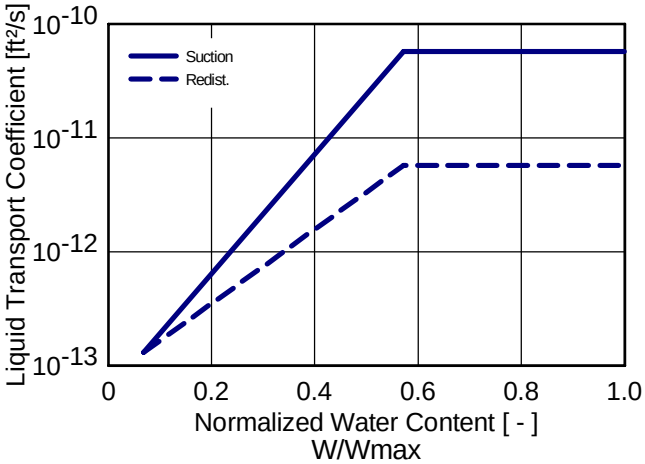

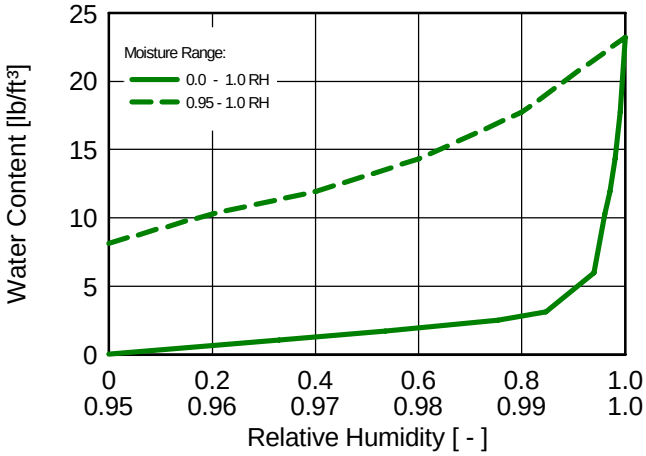

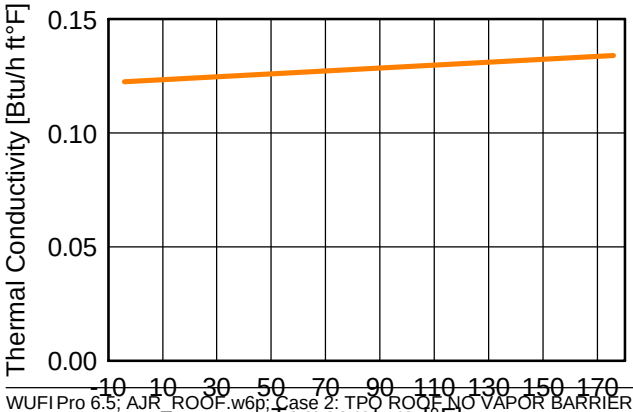

Material: Polyisocyanurate Board, Glass-Matt Facer

Property	Unit	Value
Bulk density	[lb/ft³]	27
Porosity	[ft³/ft³]	0.5
Specific Heat Capacity, Dry	[Btu/lb°F]	0.3583
Thermal Conductivity, Dry, 50°F	[Btu/h ft°F]	0.12
Permeability	[perm in]	0.267
Temp-dep. Thermal Cond. Supplement	[Btu/h ft°F²]	6.42000E-5

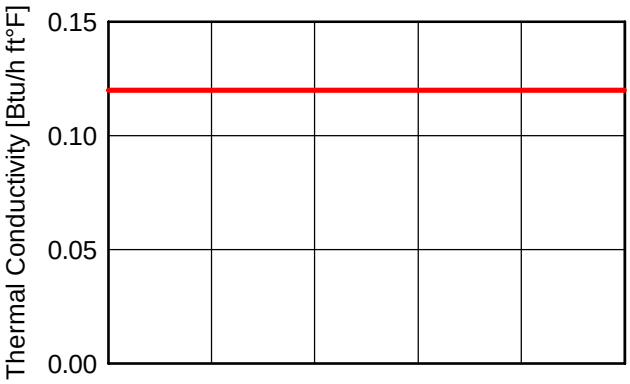

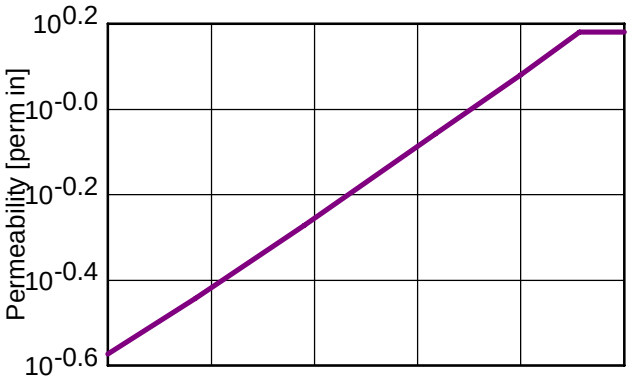

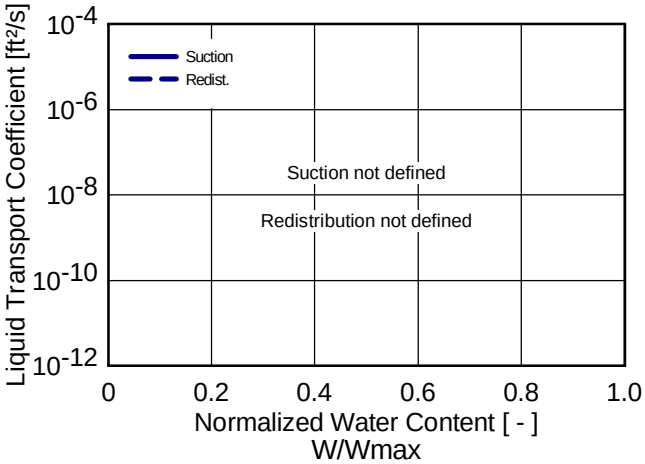

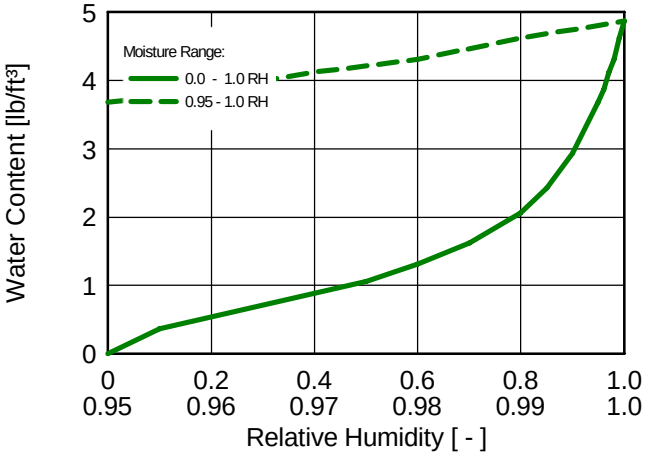

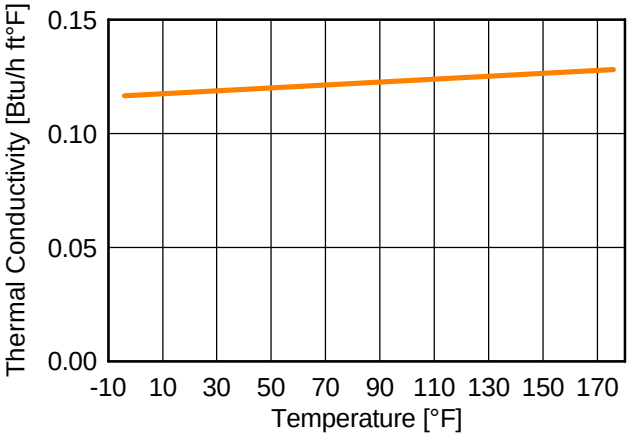

Material: Polyisocyanurate Board

Property	Unit	Value
Bulk density	[lb/ft³]	2.03
Porosity	[ft³/ft³]	0.99
Specific Heat Capacity, Dry	[Btu/lb°F]	0.3511
Thermal Conductivity, Dry, 50°F	[Btu/h ft°F]	0.01387
Permeability	[perm in]	1.8
Moisture-dep. Thermal Cond. Supplement	[%/M.-%]	0.7

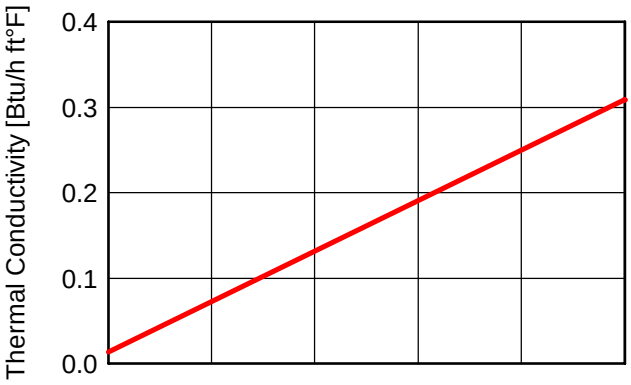

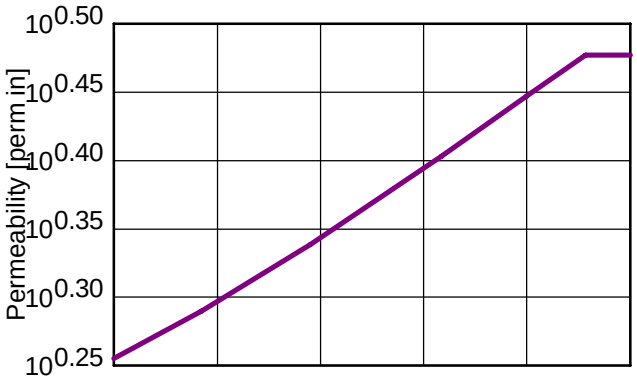

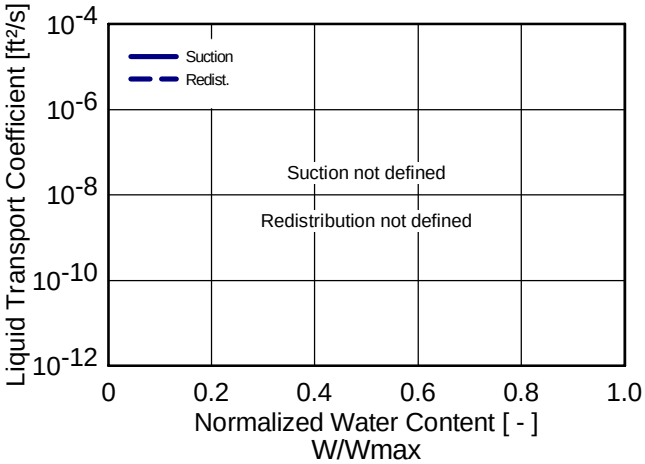

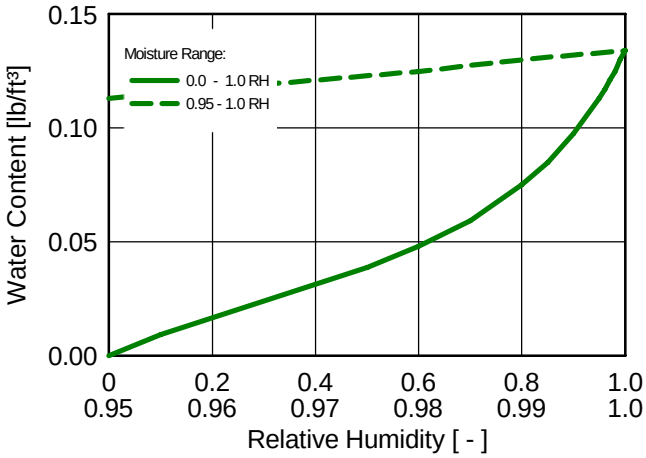

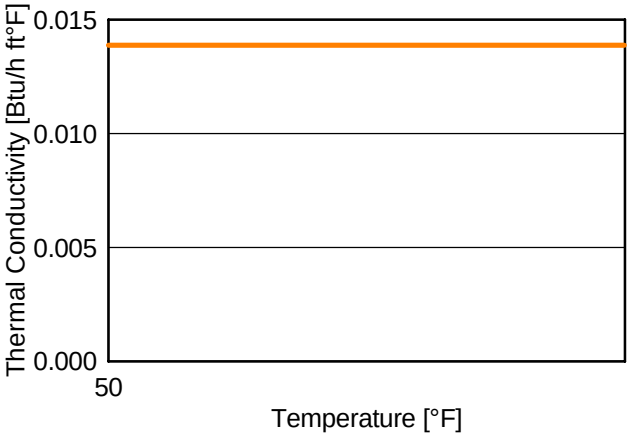

Material: Polyisocyanurate Board, Glass-Matt Facer

Property	Unit	Value
Bulk density	[lb/ft³]	27
Porosity	[ft³/ft³]	0.5
Specific Heat Capacity, Dry	[Btu/lb°F]	0.3583
Thermal Conductivity, Dry, 50°F	[Btu/h ft°F]	0.12
Permeability	[perm in]	0.267
Temp-dep. Thermal Cond. Supplement	[Btu/h ft°F²]	6.42000E-5

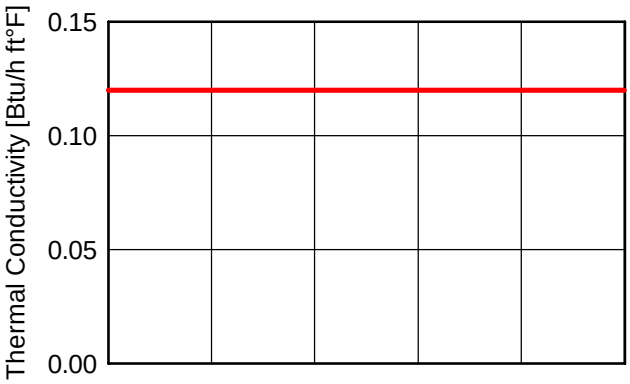

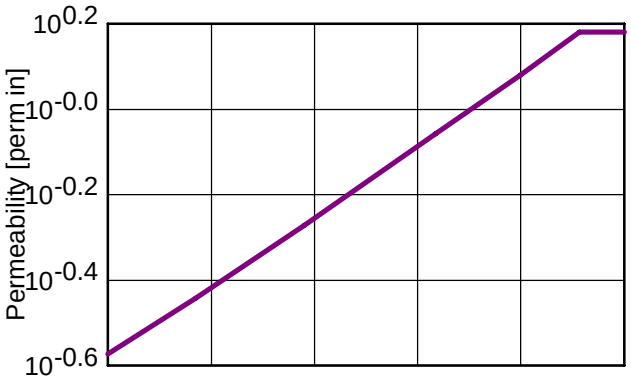

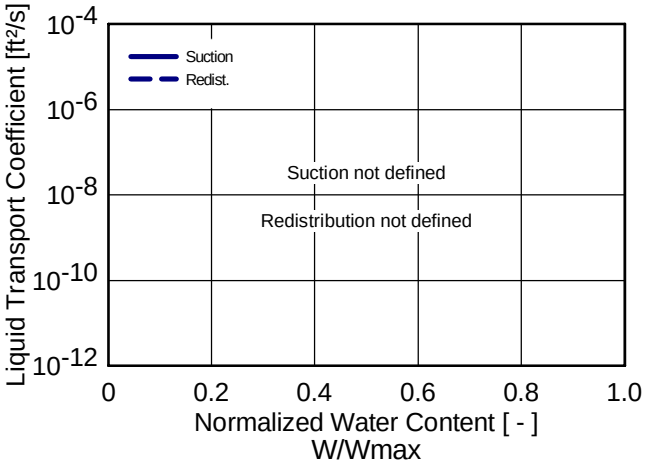

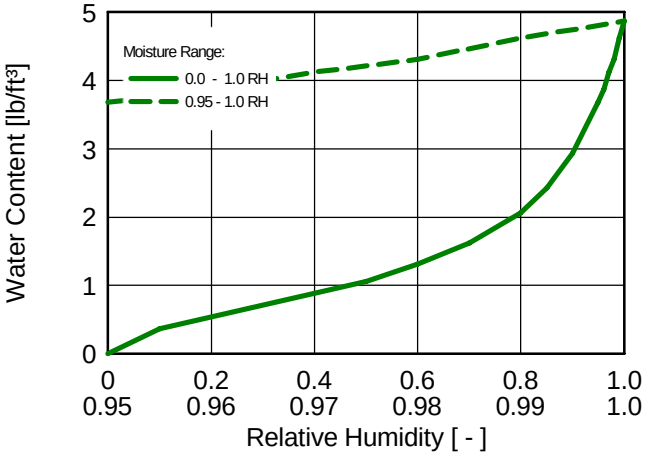

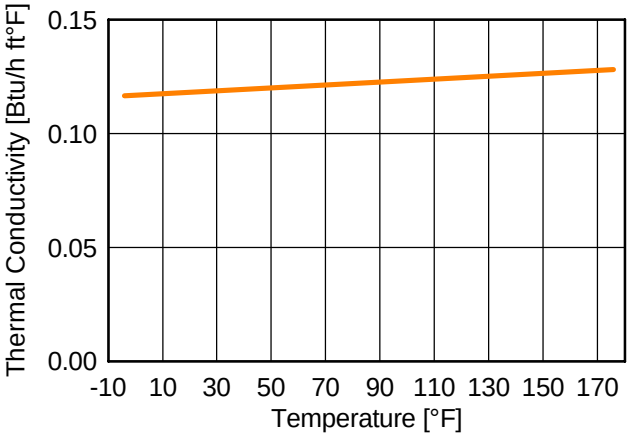

Material: Polyisocyanurate Board

Property	Unit	Value
Bulk density	[lb/ft³]	2.03
Porosity	[ft³/ft³]	0.99
Specific Heat Capacity, Dry	[Btu/lb°F]	0.3511
Thermal Conductivity, Dry, 50°F	[Btu/h ft°F]	0.01387
Permeability	[perm in]	1.8
Moisture-dep. Thermal Cond. Supplement	[%/M.-%]	0.7

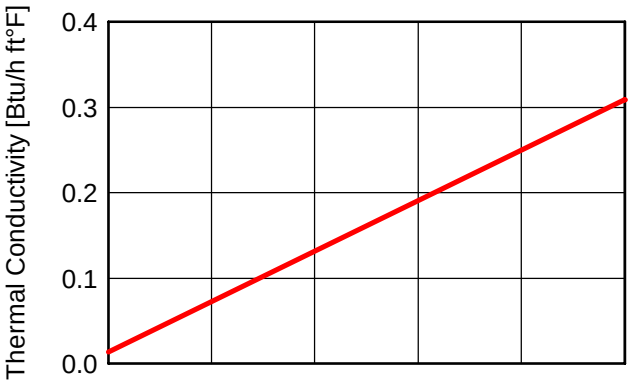

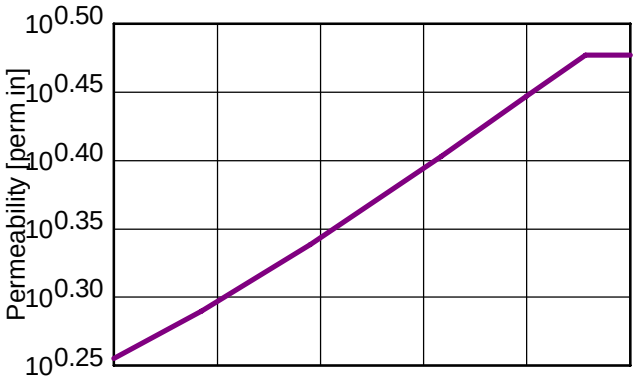

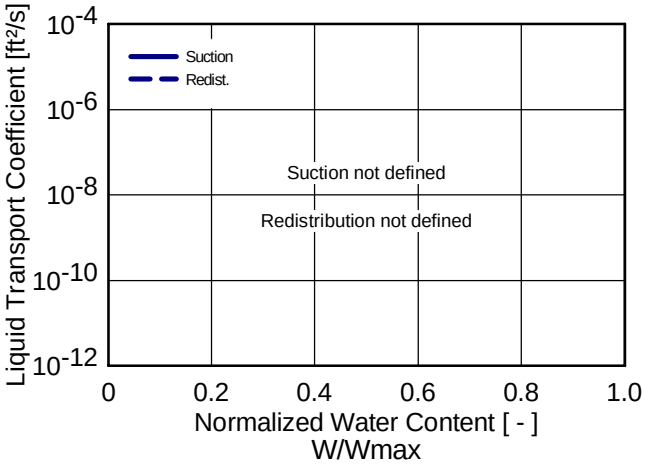

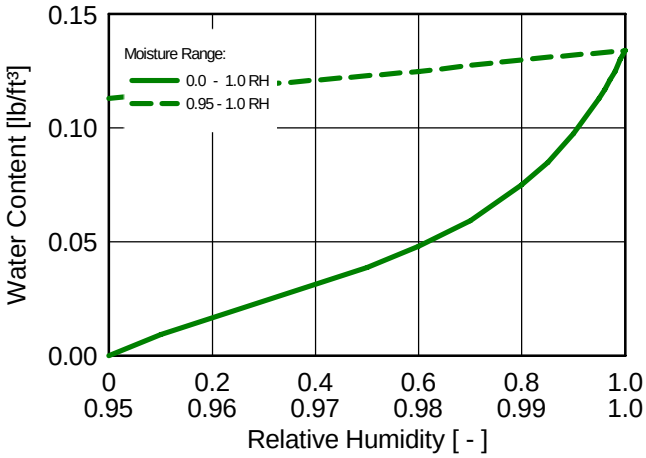

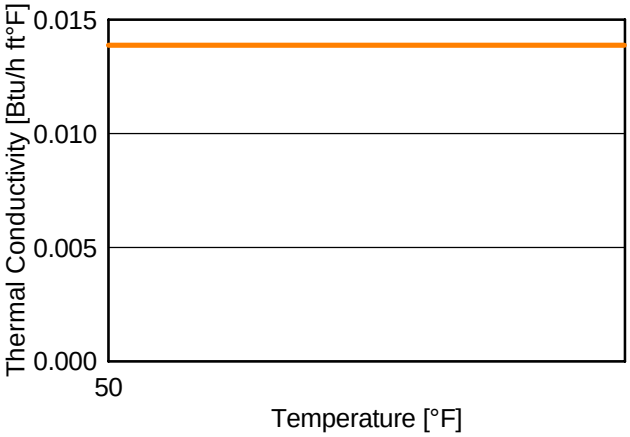

Material: Polyisocyanurate Board, Glass-Matt Facer

Property	Unit	Value
Bulk density	[lb/ft³]	27
Porosity	[ft³/ft³]	0.5
Specific Heat Capacity, Dry	[Btu/lb°F]	0.3583
Thermal Conductivity, Dry, 50°F	[Btu/h ft°F]	0.12
Permeability	[perm in]	0.267
Temp-dep. Thermal Cond. Supplement	[Btu/h ft°F²]	6.42000E-5

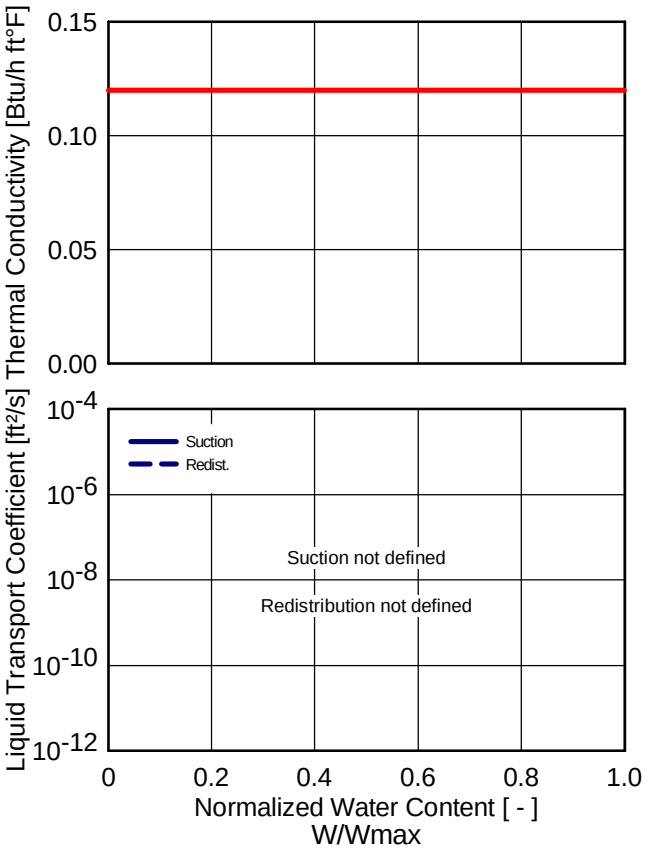

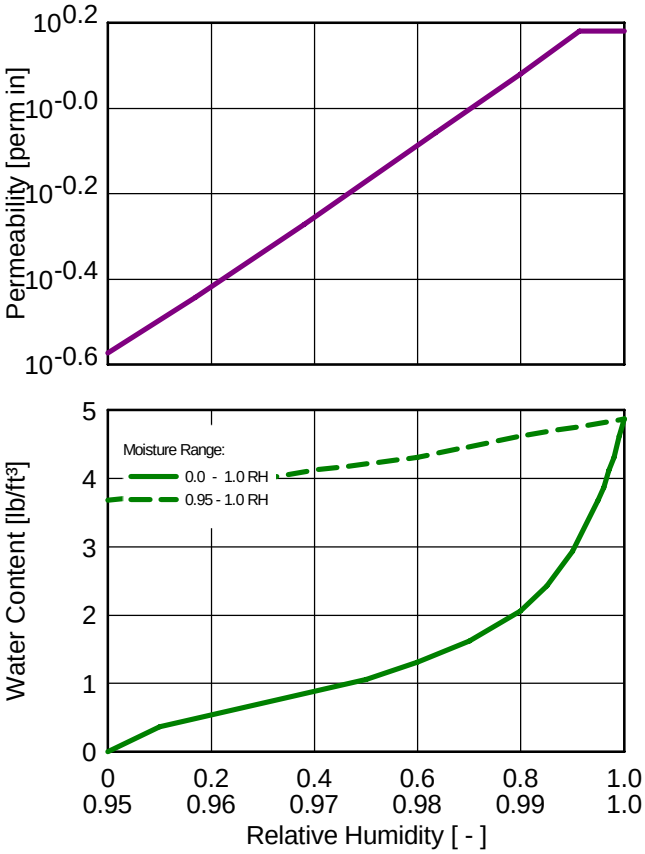

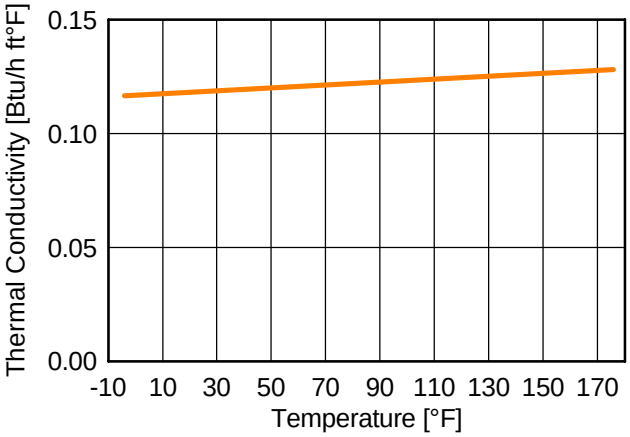

Material: GlasRoc® Sheathing (5/8 inch)

Property	Unit	Value
Bulk density	[lb/ft³]	44.5
Porosity	[ft³/ft³]	0.65
Specific Heat Capacity, Dry	[Btu/lb°F]	0.203
Thermal Conductivity, Dry, 50°F	[Btu/h ft°F]	0.126
Permeability	[perm in]	28
Reference Water Content	[lb/ft³]	2.5
Free Water Saturation	[lb/ft³]	22.5
Water Absorption Coefficient	[lb/in²s^0.5]	1.10000E-6
Moisture-dep. Thermal Cond. Supplement	[%/M.-%]	8
Temp-dep. Thermal Cond. Supplement	[Btu/h ft°F²]	6.42000E-5
Thermal Conductivity, Design Value	[Btu/h ft°F]	0.021263

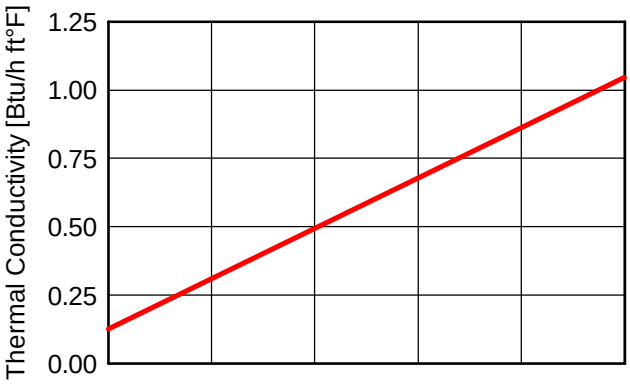

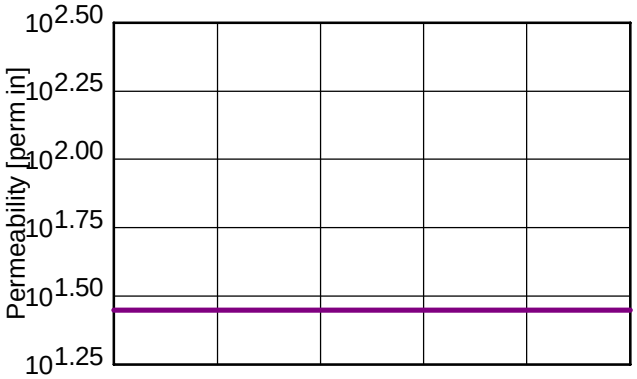

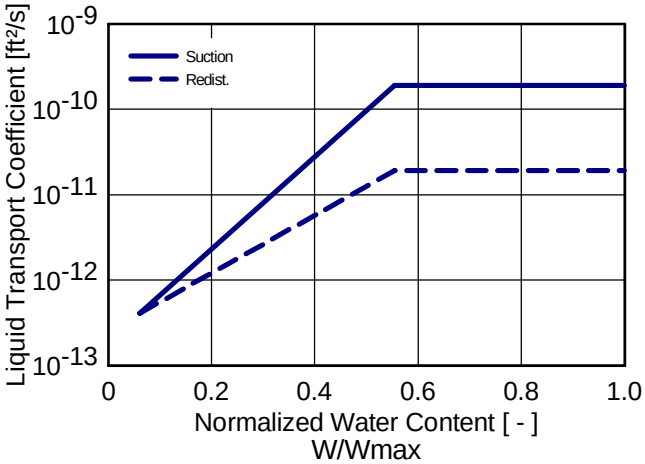

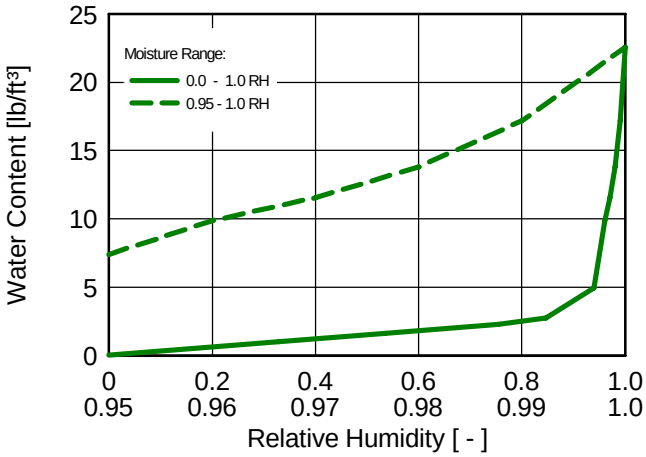

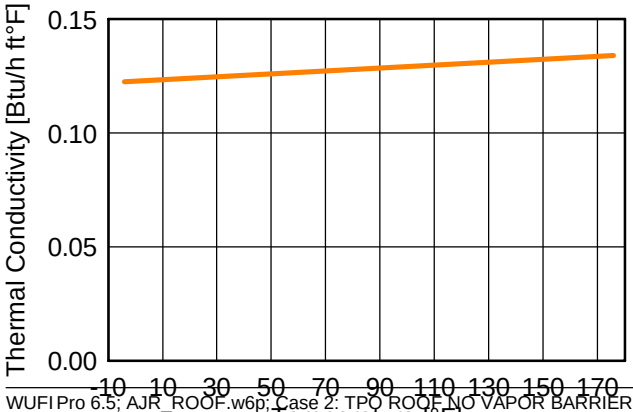

Material: *Metal Deck

Property	Unit	Value
Bulk density	[lb/ft³]	8.1156
Porosity	[ft³/ft³]	0.001
Specific Heat Capacity, Dry	[Btu/lb°F]	0.5493
Thermal Conductivity, Dry, 50°F	[Btu/h ft°F]	96.4909
Permeability	[perm in]	0.0039
Temp-dep. Thermal Cond. Supplement	[Btu/h ft°F²]	6.42000E-5

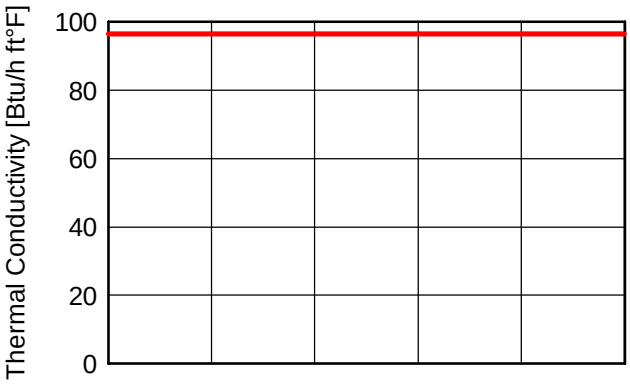

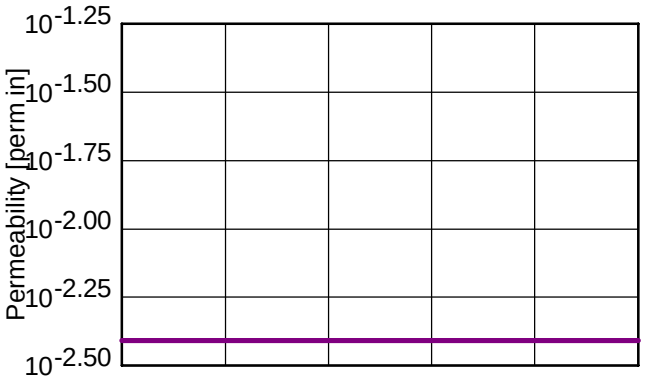

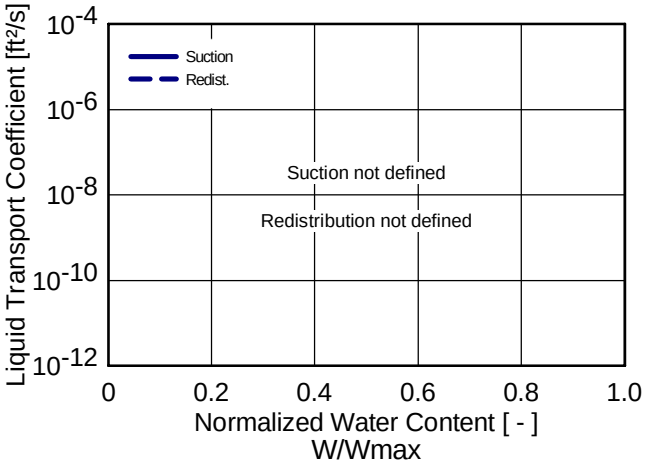

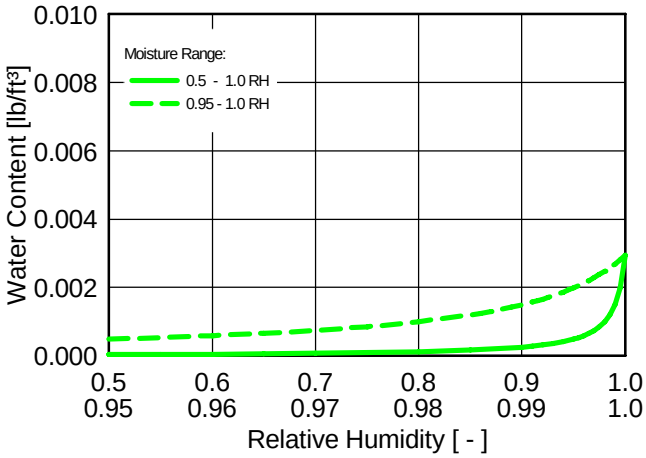

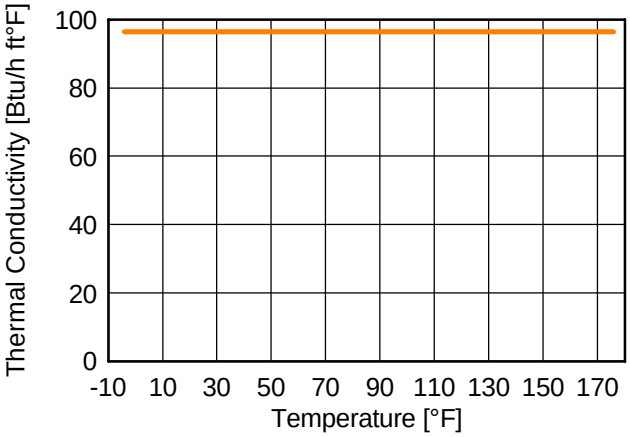

Boundary Conditions

Exterior (Left Side)

Location: Baltimore, MD; ASHRAE Year 2
Temperature Shift: 0.0 °F
Orientation / Inclination: North-East / 0 °

Interior (Right Side)

Indoor Climate: ASHRAE 160P
Air-conditioning; 5.04 °F; 68 °F; 74 °F
M.Rate 0.83 lb/h; A.Ch.Rate 0.2 1/h; Vol. 17657.3333 ft³
Humidity Ratio Wo -1.0000 lb/lb

Surface Transfer Coefficients

Exterior (Left Side)

Name	Description	Unit	Value
Heat Resistance - includes long-wave radiation	Roof (DIN 68800-2:2012-02)	[h ft² °F/Btu]	0.2987 yes
Permeance	No coating	[perm]	----
Short-Wave Radiation Absorptivity	Bright	[-]	0.2
Long-Wave Radiation Emissivity	Bright	[-]	0.9
Adhering Fraction of Rain	Depending on inclination o	[-]	1.0
Explicit Radiation Balance			yes
Terrestrial Short-Wave Reflectivity		[-]	0.2
Terrestrial Long-Wave Emissivity		[-]	0.9
Terrestrial Long-Wave Reflectivity		[-]	0.1
Cloud Index		[-]	0.66

Interior (Right Side)

Name	Description	Unit	Value
Heat Resistance	Roof (DIN 68800-2:2012-02)	[h ft² °F/Btu]	0.7098
Permeance	No coating	[perm]	----

Results from Last Calculation

Status of Calculation

Calculation: Time and Date	10/22/2021 4:37:34 AM
Computing Time	5 min,21 sec.
Begin / End of calculation	10/1/2021 / 10/1/2026
No. of Convergence Failures	0

Check for numerical quality

Integral of fluxes, left side (kl,dl)	[lb/ft²]	0.0 -0.03
Integral of fluxes, right side (kr,dr)	[lb/ft²]	0.0 0.0
Balance 1	[lb/ft²]	-0.03
Balance 2	[lb/ft²]	-0.03

Water Content [lb/ft²]

	Start	End	Min.	Max.
Total Water Content	0.3	0.27	0.27	0.3

Water Content [lb/ft³]

Layer/Material	Start	End	Min.	Max.
TPO membrane	0.00	0.03	0.00	0.03
GlasRoc® Sheathing (1/2 inch)	2.81	2.71	2.69	4.29
Polyisocyanurate Board, Glass-Matt F	2.06	2.01	1.98	2.82
Polyisocyanurate Board	0.07	0.07	0.07	0.10
Polyisocyanurate Board, Glass-Matt F	2.06	1.92	1.48	2.50
Polyisocyanurate Board	0.07	0.07	0.04	0.08
Polyisocyanurate Board, Glass-Matt F	2.06	1.64	0.97	2.06
GlasRoc® Sheathing (5/8 inch)	2.50	2.11	1.36	2.50
*Metal Deck	0.00	0.00	0.00	0.00

Time Integral of fluxes

Heat Flux, left side	[Btu/ft²]	1.9E+0005
Heat Flux, right side	[Btu/ft²]	-23663.66
Moisture Fluxes, left side	[lb/ft²]	34.59
Moisture Fluxes, right side	[lb/ft²]	0.0

Hygrothermal Sources

Heat Sources	[Btu/ft²]	0.0

Hygrothermal Sources (Continue)

Moisture Sources	[lb/ft²]	0.0
Unreleased Moisture Sources (due to cut-off)	[lb/ft²]	0.0

Project Data

Project Name	AJR TPO ROOF
Project Number	D3286024
Client	
Contact Person	Brian Ortiz
City/Zip	Dallas
Street	1999 Bryan Street
Phone	
Fax	
e-mail	brian.ortiz@jacobs.com
Responsible	
Remarks	Climate weather file used Baltimore, Maryland.
Date	10/20/2021 8:20:27 AM

Cross Sectional Time-Line graph 5-Year span

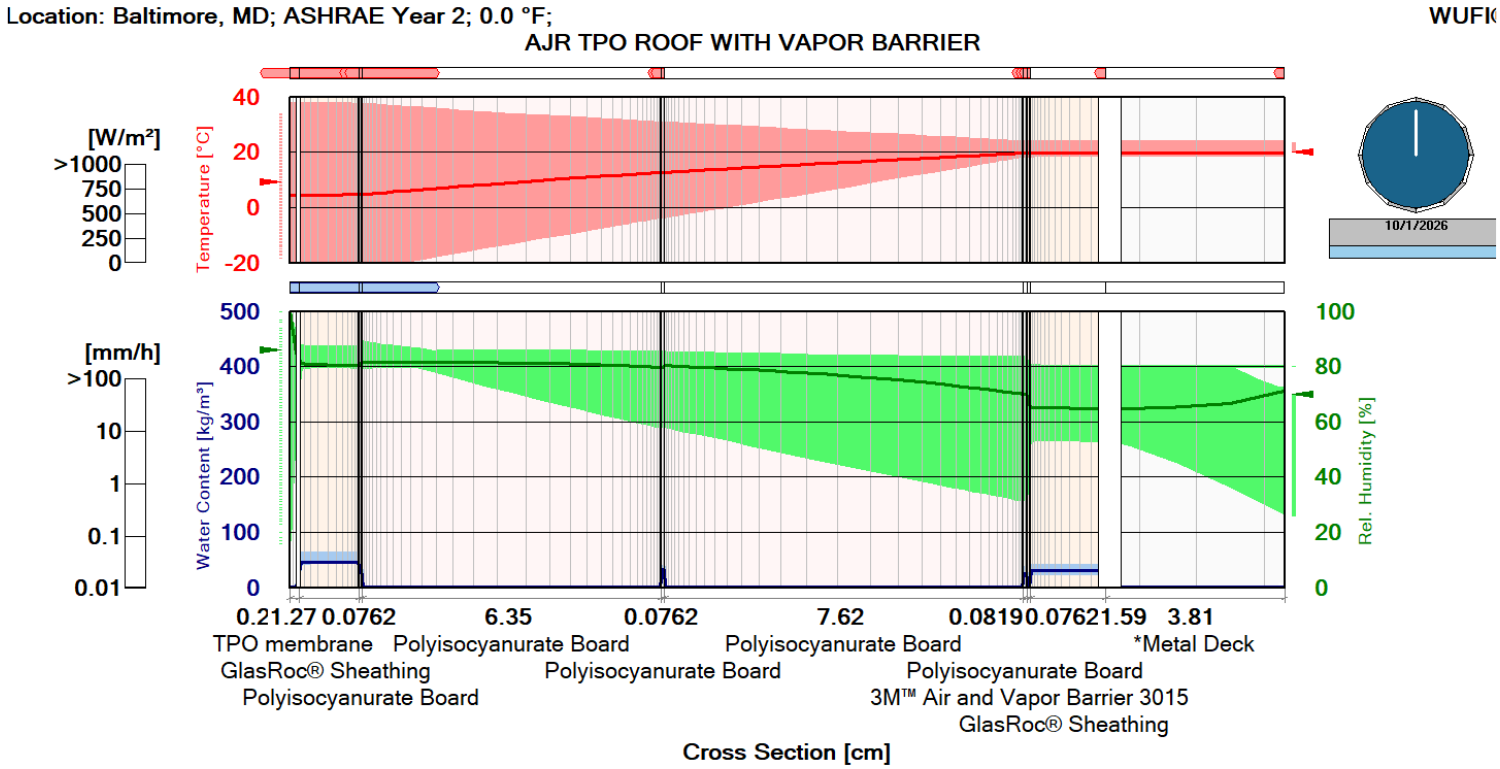

Component Assembly

Case: TPO ROOF WITH VAPOR BARRIER

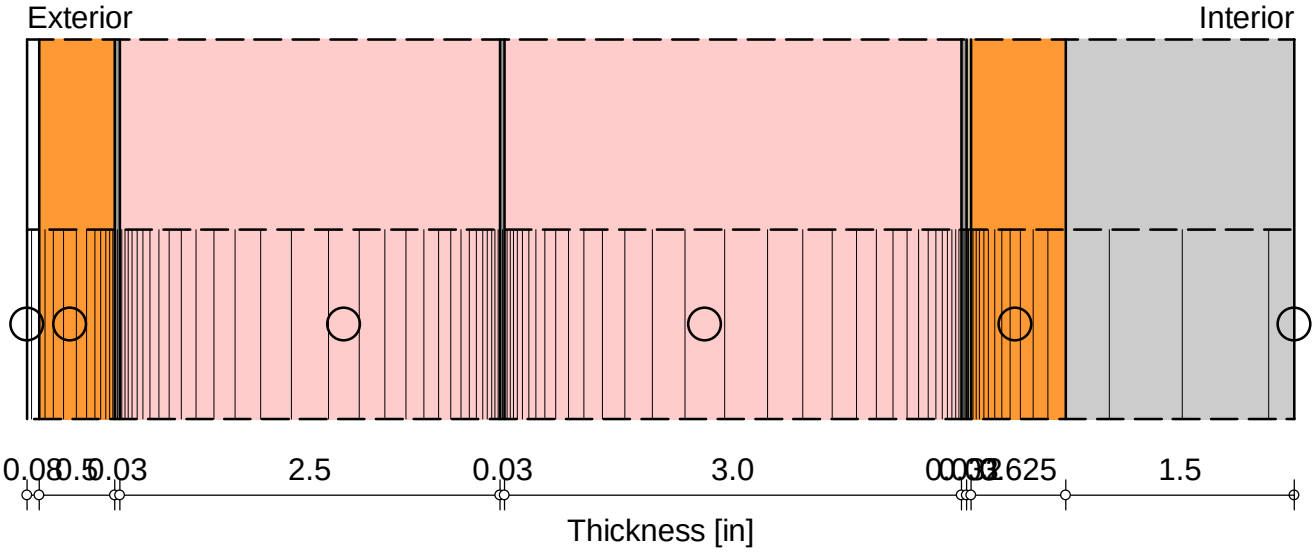

- Monitor positions

Materials:

- TPO membrane	0.08 in
- GlasRoc® Sheathing (1/2 inch)	0.5 in
- Polyisocyanurate Board, Glass-Matt Facer	0.03 in
- Polyisocyanurate Board	2.5 in
- Polyisocyanurate Board, Glass-Matt Facer	0.03 in
- Polyisocyanurate Board	3.0 in
- Polyisocyanurate Board, Glass-Matt Facer	0.032 in
- 3M™ Air and Vapor Barrier 3015	0.03 in
- GlasRoc® Sheathing (5/8 inch)	0.625 in
- *Metal Deck	1.5 in

Total Thickness: 8.327 in
R-Value: 36.83 h ft² °F/Btu
U-Value: 0.026 Btu/h ft²°F

Material: TPO membrane

Property	Unit	Value
Bulk density	[lb/ft³]	93.64
Porosity	[ft³/ft³]	0.001
Specific Heat Capacity, Dry	[Btu/lb°F]	0.3583
Thermal Conductivity, Dry, 50°F	[Btu/h ft°F]	0.12
Permeability	[perm in]	0.0041892
Temp-dep. Thermal Cond. Supplement	[Btu/h ft°F²]	6.42000E-5

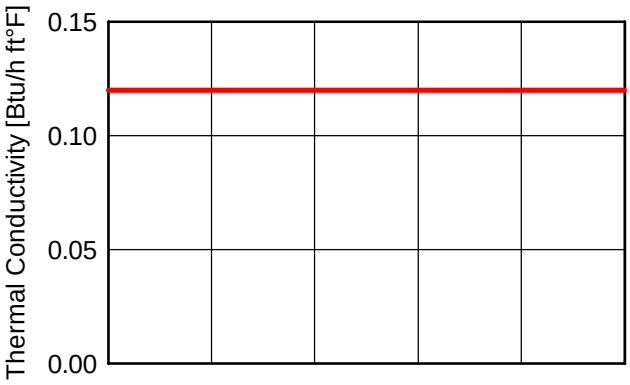

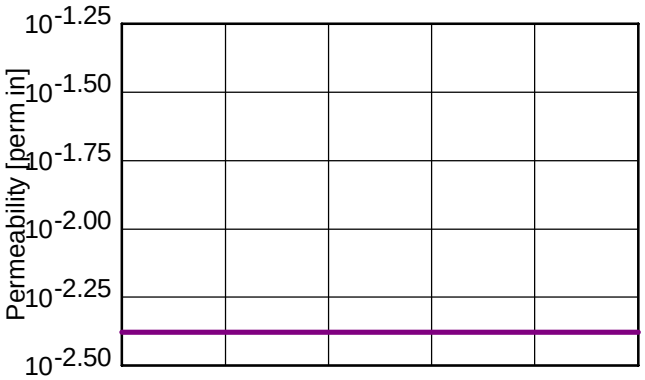

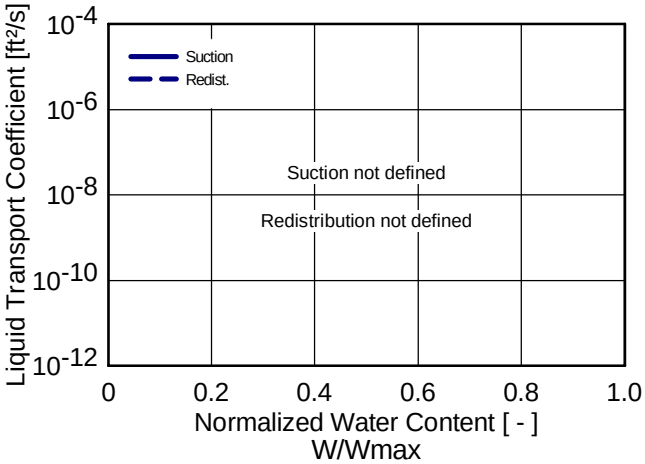

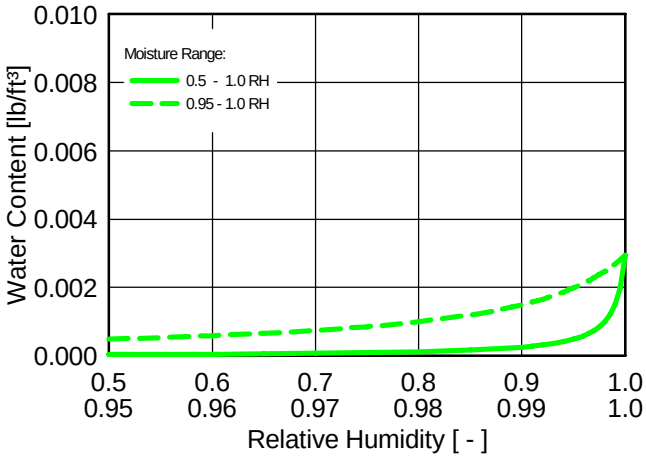

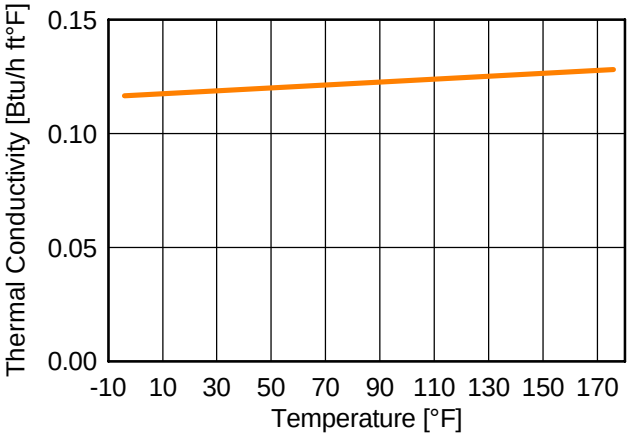

Material: GlasRoc® Sheathing (1/2 inch)

Property	Unit	Value
Bulk density	[lb/ft³]	45.57239
Porosity	[ft³/ft³]	0.65
Specific Heat Capacity, Dry	[Btu/lb°F]	0.203
Thermal Conductivity, Dry, 50°F	[Btu/h ft°F]	0.126
Permeability	[perm in]	27
Reference Water Content	[lb/ft³]	2.8
Free Water Saturation	[lb/ft³]	23.2
Water Absorption Coefficient	[lb/in²s^0.5]	6.21600E-7
Moisture-dep. Thermal Cond. Supplement	[%/M.-%]	8
Temp-dep. Thermal Cond. Supplement	[Btu/h ft°F²]	6.42000E-5
Thermal Conductivity, Design Value	[Btu/h ft°F]	0.020396

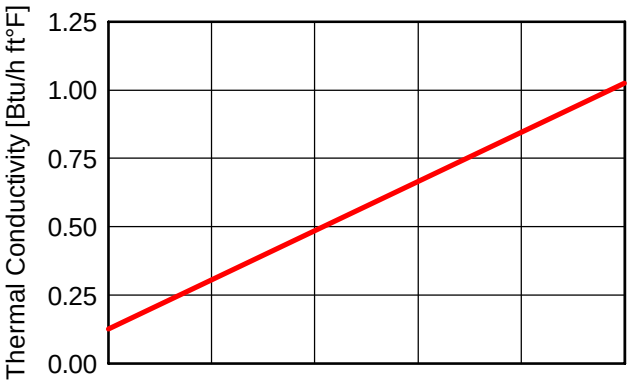

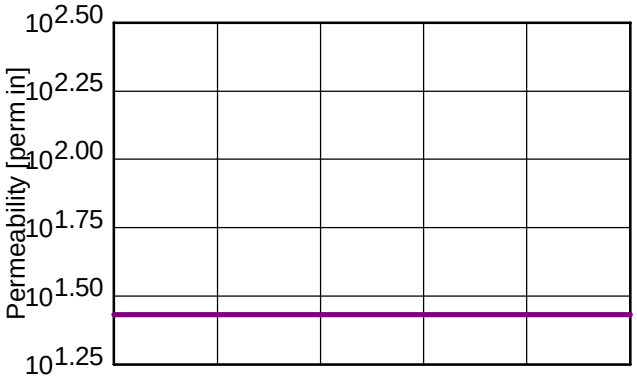

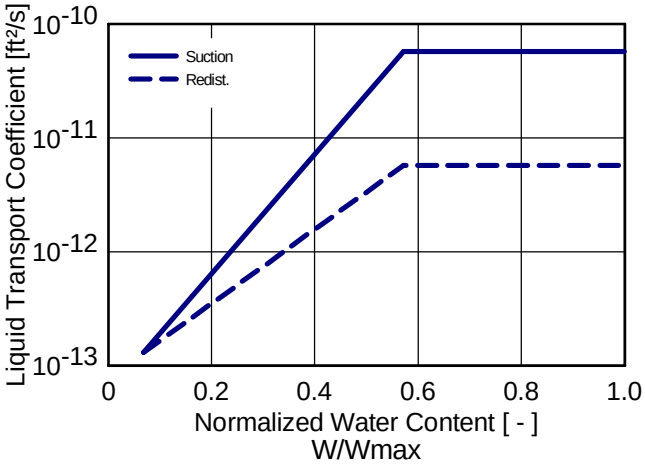

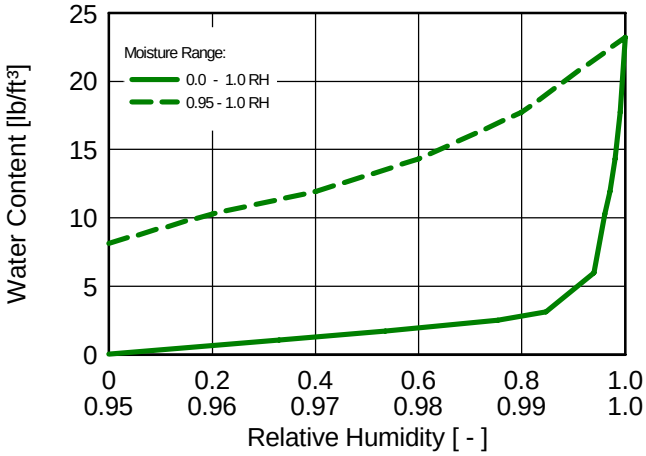

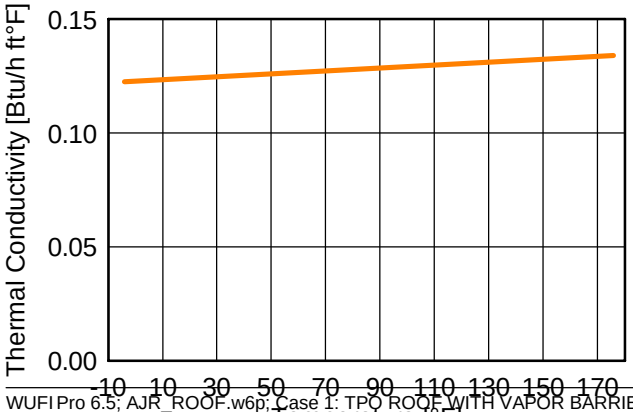

Material: Polyisocyanurate Board, Glass-Matt Facer

Property	Unit	Value
Bulk density	[lb/ft³]	27
Porosity	[ft³/ft³]	0.5
Specific Heat Capacity, Dry	[Btu/lb°F]	0.3583
Thermal Conductivity, Dry, 50°F	[Btu/h ft°F]	0.12
Permeability	[perm in]	0.267
Temp-dep. Thermal Cond. Supplement	[Btu/h ft°F²]	6.42000E-5

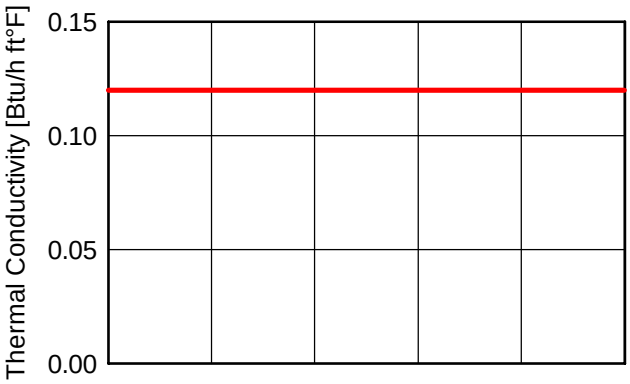

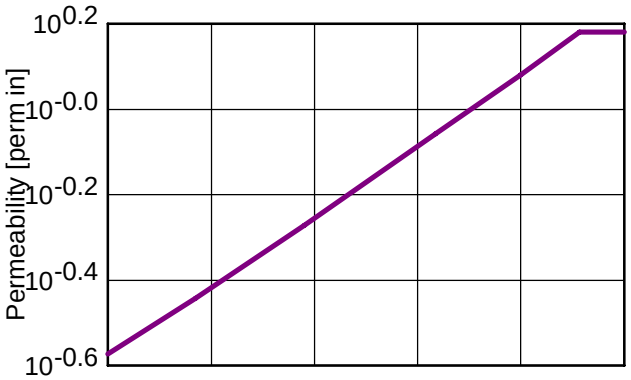

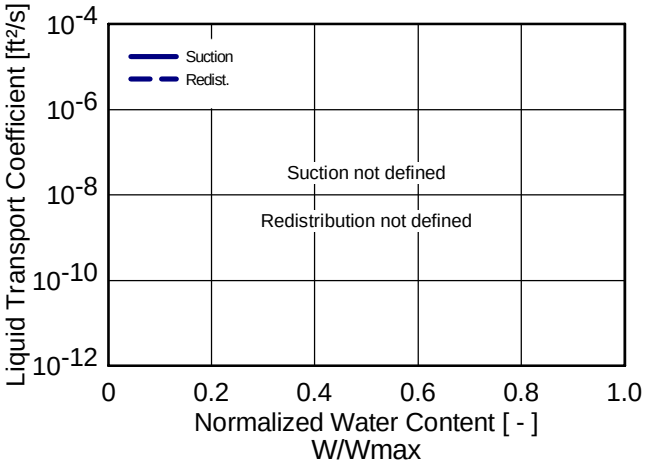

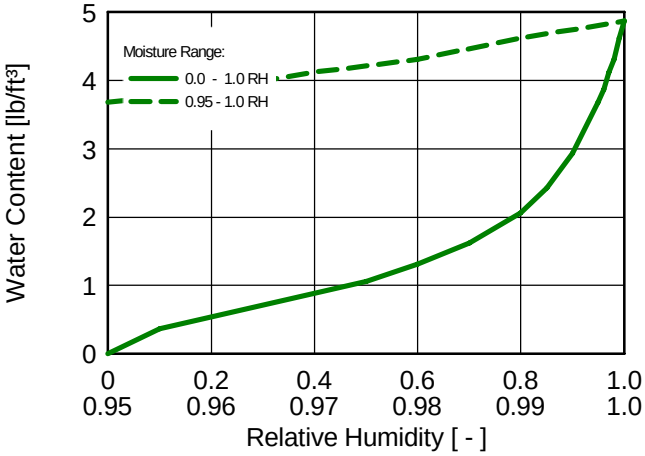

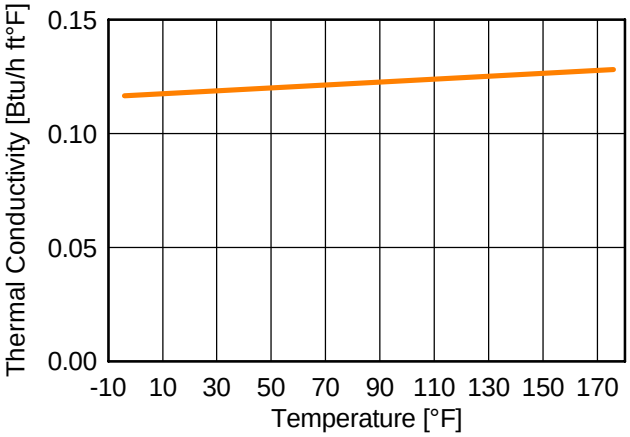

Material: Polyisocyanurate Board

Property	Unit	Value
Bulk density	[lb/ft³]	2.03
Porosity	[ft³/ft³]	0.99
Specific Heat Capacity, Dry	[Btu/lb°F]	0.3511
Thermal Conductivity, Dry, 50°F	[Btu/h ft°F]	0.01387
Permeability	[perm in]	1.8
Moisture-dep. Thermal Cond. Supplement	[%/M.-%]	0.7

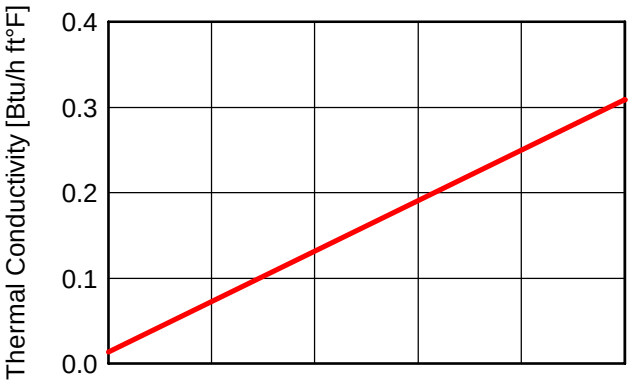

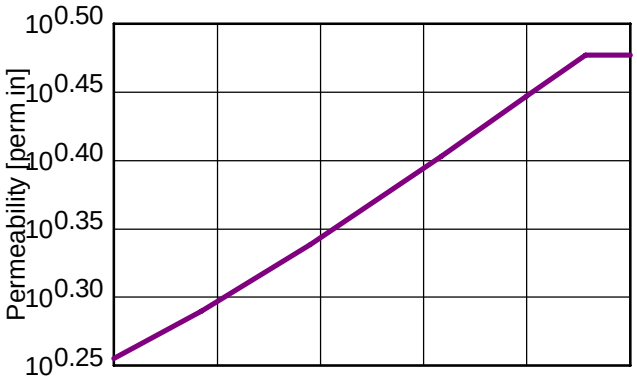

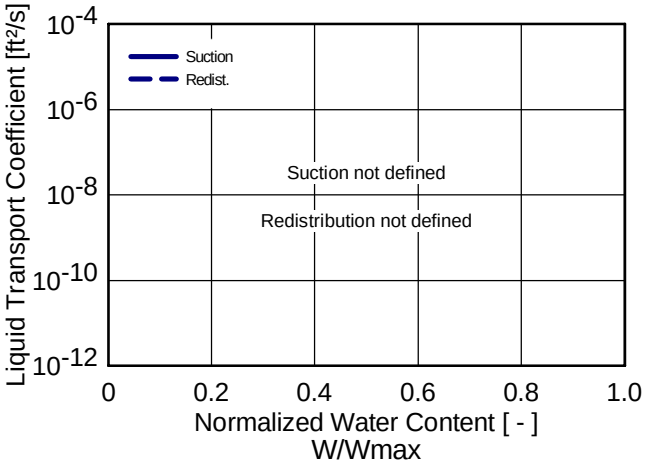

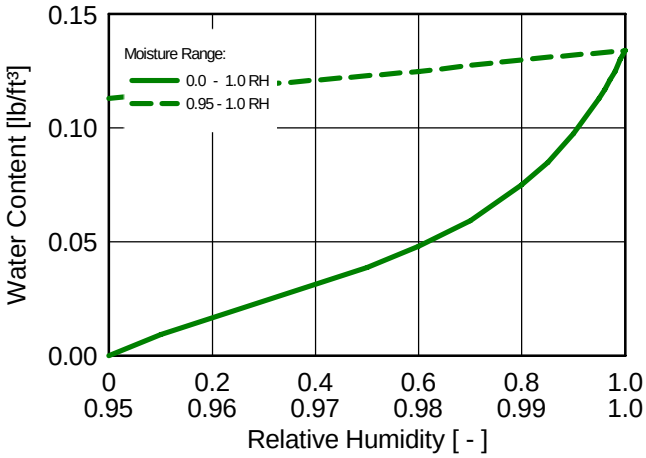

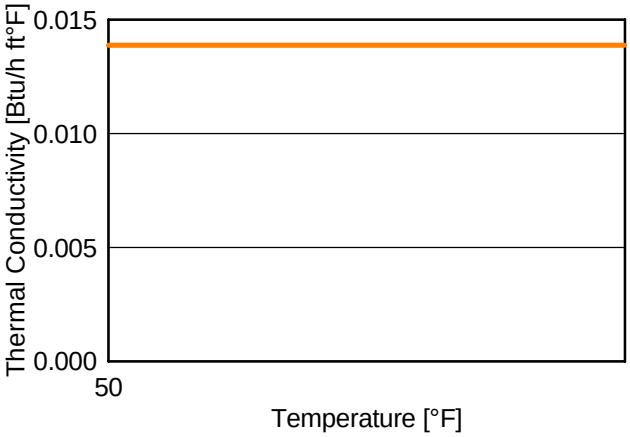

Material: Polyisocyanurate Board, Glass-Matt Facer

Property	Unit	Value
Bulk density	[lb/ft³]	27
Porosity	[ft³/ft³]	0.5
Specific Heat Capacity, Dry	[Btu/lb°F]	0.3583
Thermal Conductivity, Dry, 50°F	[Btu/h ft°F]	0.12
Permeability	[perm in]	0.267
Temp-dep. Thermal Cond. Supplement	[Btu/h ft°F²]	6.42000E-5

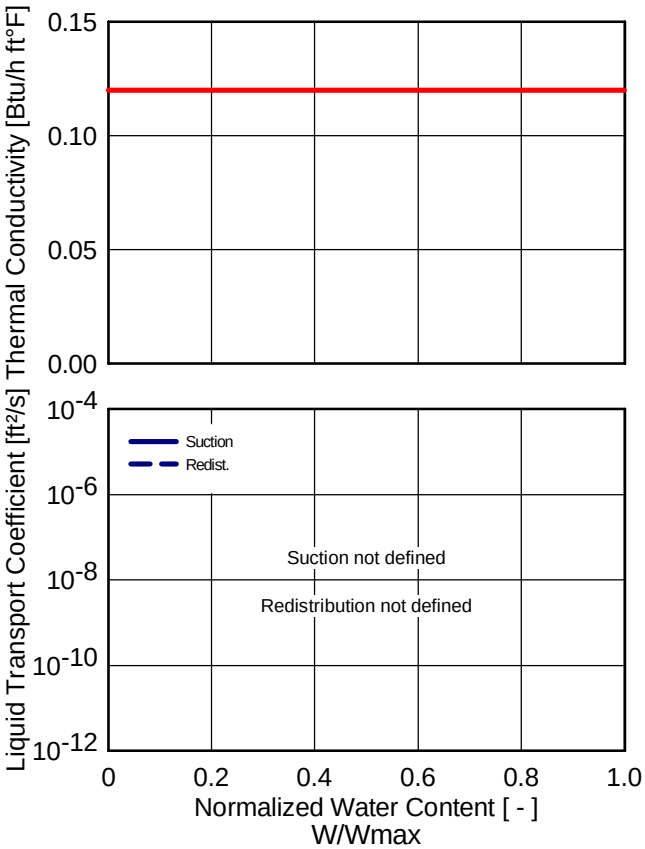

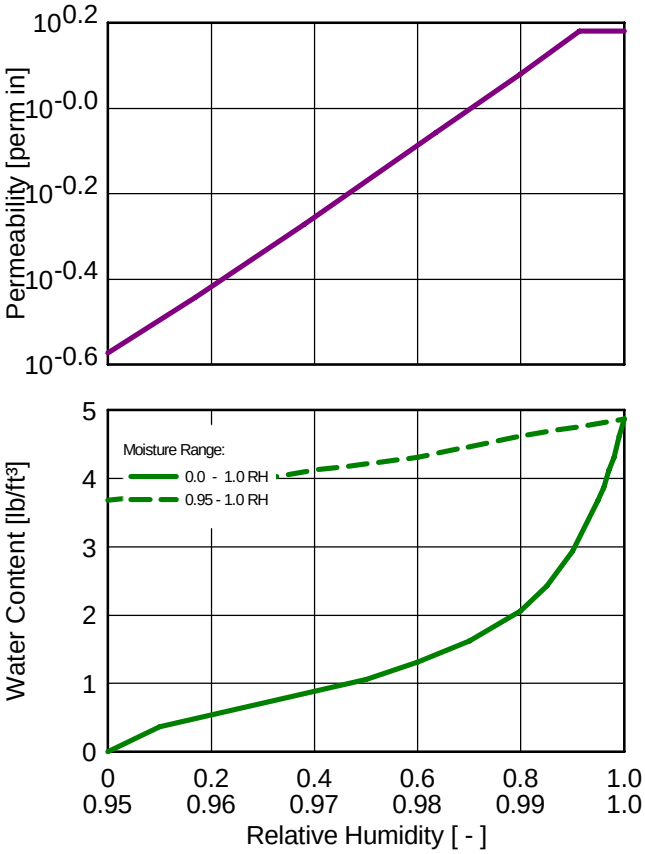

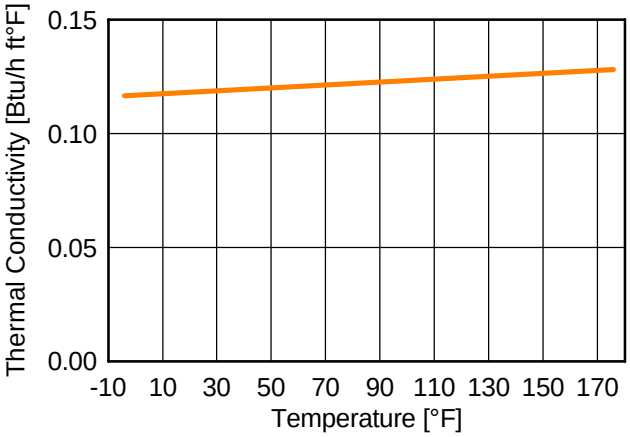

Material: Polyisocyanurate Board

Property	Unit	Value
Bulk density	[lb/ft³]	2.03
Porosity	[ft³/ft³]	0.99
Specific Heat Capacity, Dry	[Btu/lb°F]	0.3511
Thermal Conductivity, Dry, 50°F	[Btu/h ft°F]	0.01387
Permeability	[perm in]	1.8
Moisture-dep. Thermal Cond. Supplement	[%/M.-%]	0.7

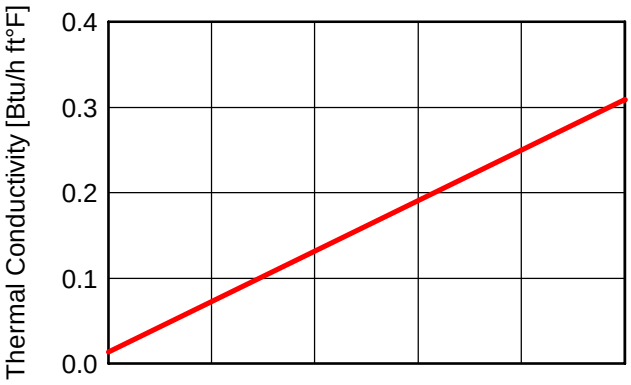

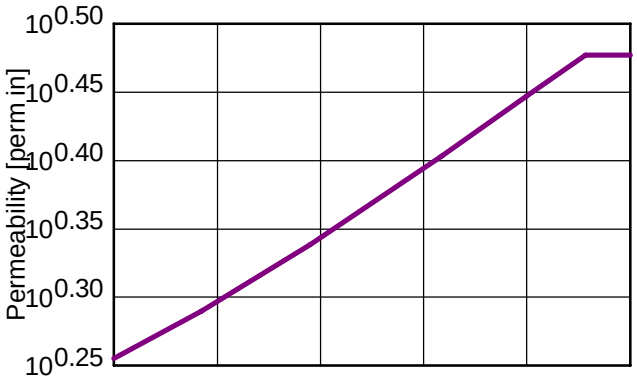

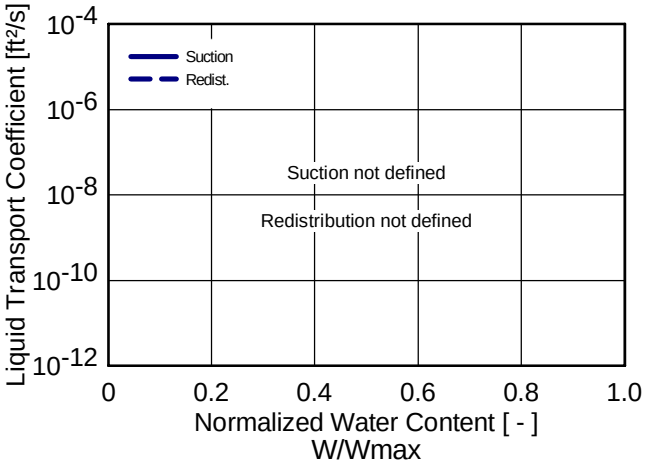

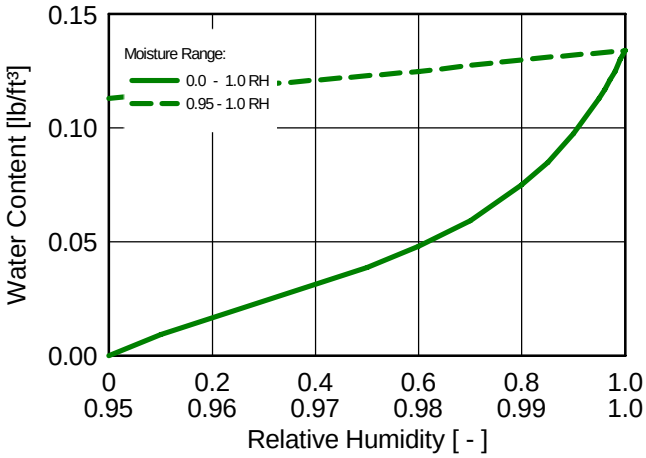

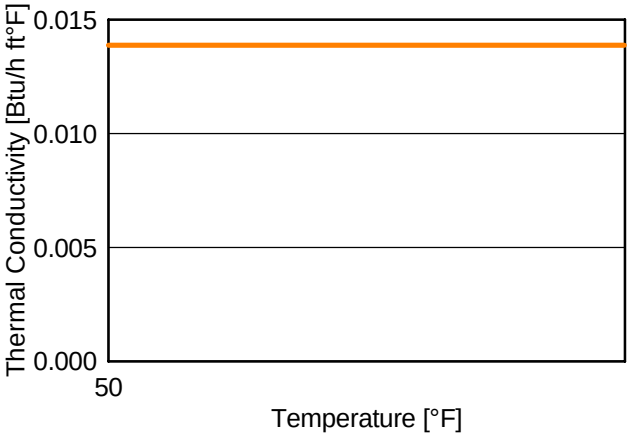

Material: Polyisocyanurate Board, Glass-Matt Facer

Property	Unit	Value
Bulk density	[lb/ft³]	27
Porosity	[ft³/ft³]	0.5
Specific Heat Capacity, Dry	[Btu/lb°F]	0.3583
Thermal Conductivity, Dry, 50°F	[Btu/h ft°F]	0.12
Permeability	[perm in]	0.267
Temp-dep. Thermal Cond. Supplement	[Btu/h ft°F²]	6.42000E-5

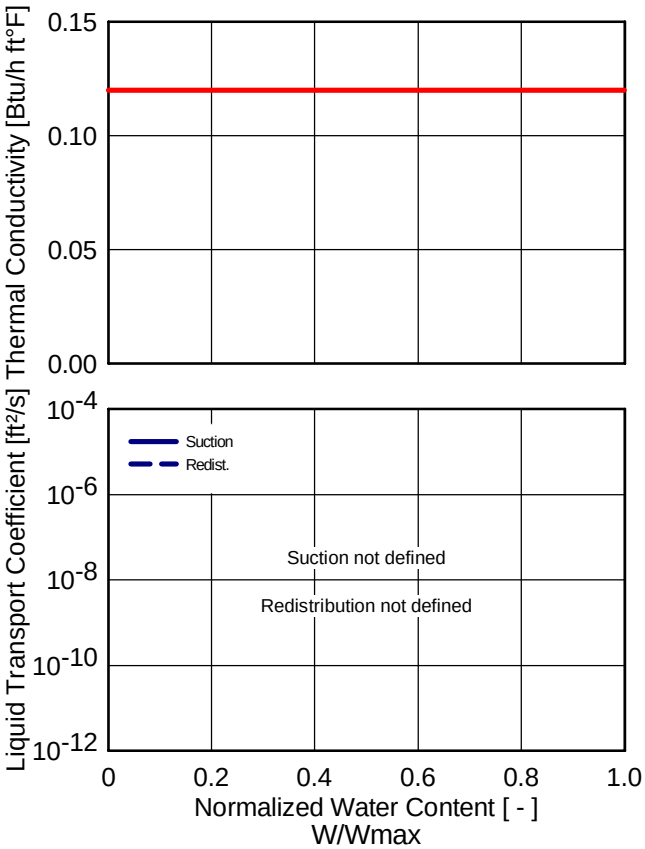

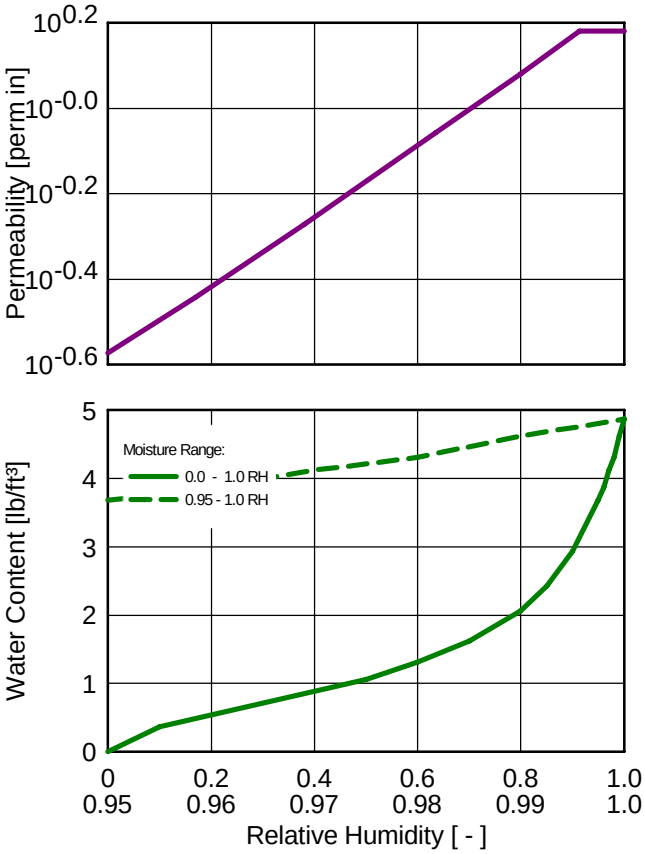

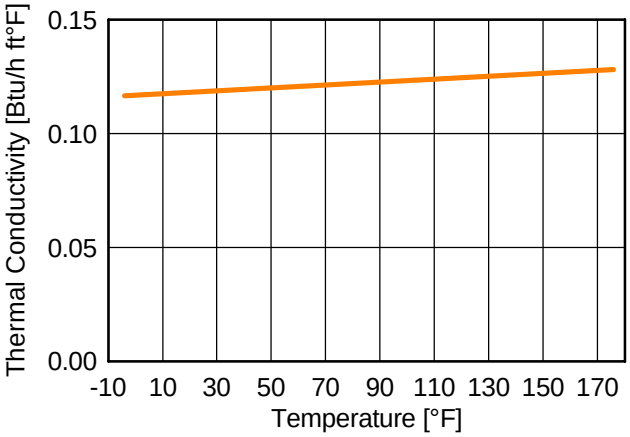

Material: 3M™ Air and Vapor Barrier 3015

Property	Unit	Value
Bulk density	[lb/ft³]	8.12
Porosity	[ft³/ft³]	0.001
Specific Heat Capacity, Dry	[Btu/lb°F]	0.5493
Thermal Conductivity, Dry, 50°F	[Btu/h ft°F]	1.3
Permeability	[perm in]	0.0064227

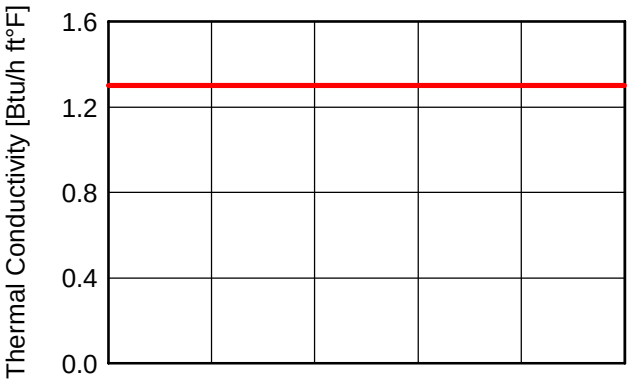

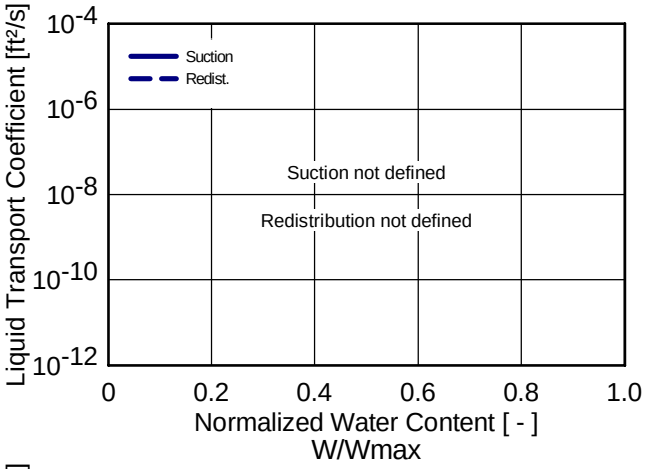

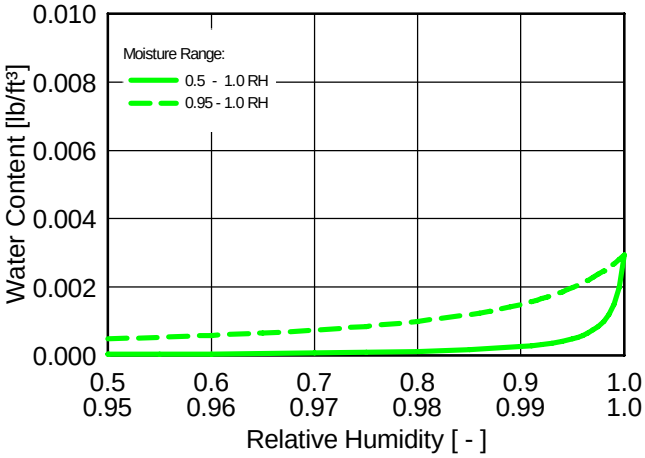

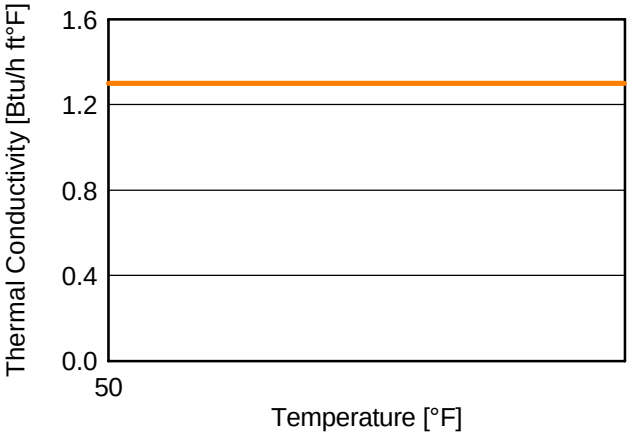

Material: GlasRoc® Sheathing (5/8 inch)

Property	Unit	Value
Bulk density	[lb/ft³]	44.5
Porosity	[ft³/ft³]	0.65
Specific Heat Capacity, Dry	[Btu/lb°F]	0.203
Thermal Conductivity, Dry, 50°F	[Btu/h ft°F]	0.126
Permeability	[perm in]	28
Reference Water Content	[lb/ft³]	2.5
Free Water Saturation	[lb/ft³]	22.5
Water Absorption Coefficient	[lb/in²s^0.5]	1.10000E-6
Moisture-dep. Thermal Cond. Supplement	[%/M.-%]	8
Temp-dep. Thermal Cond. Supplement	[Btu/h ft°F²]	6.42000E-5
Thermal Conductivity, Design Value	[Btu/h ft°F]	0.021263

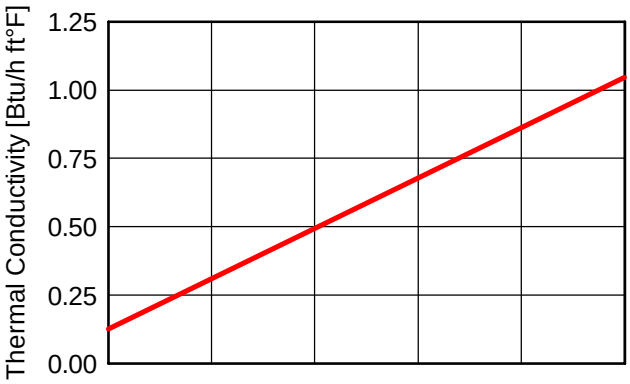

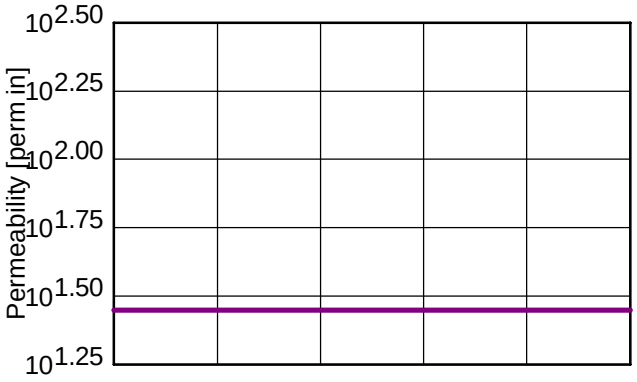

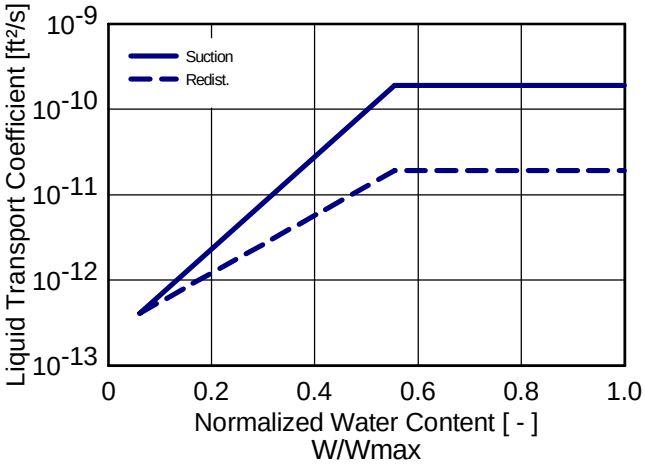

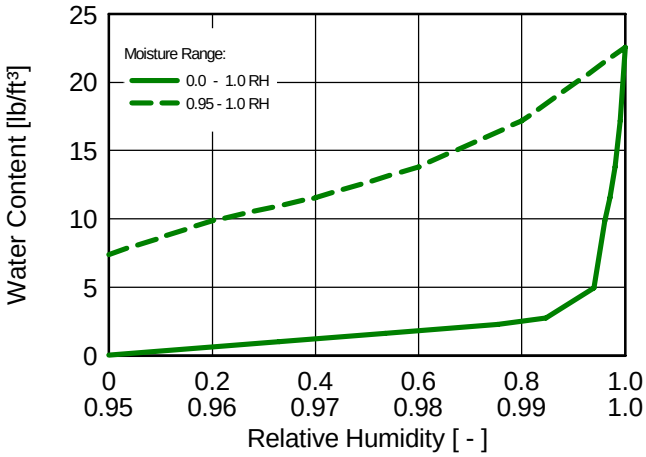

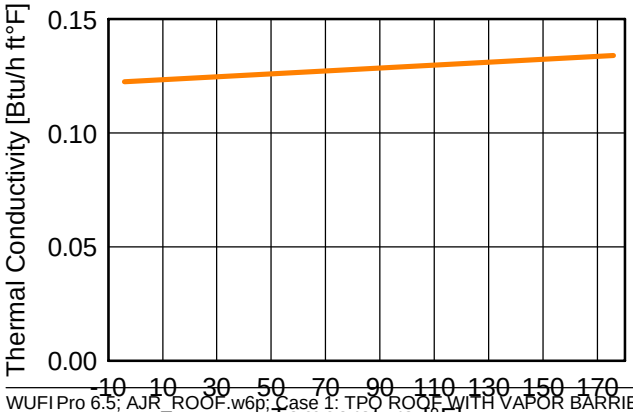

Material: *Metal Deck

Property	Unit	Value
Bulk density	[lb/ft³]	8.1156
Porosity	[ft³/ft³]	0.001
Specific Heat Capacity, Dry	[Btu/lb°F]	0.5493
Thermal Conductivity, Dry, 50°F	[Btu/h ft°F]	96.4909
Permeability	[perm in]	0.0039
Temp-dep. Thermal Cond. Supplement	[Btu/h ft°F²]	6.42000E-5

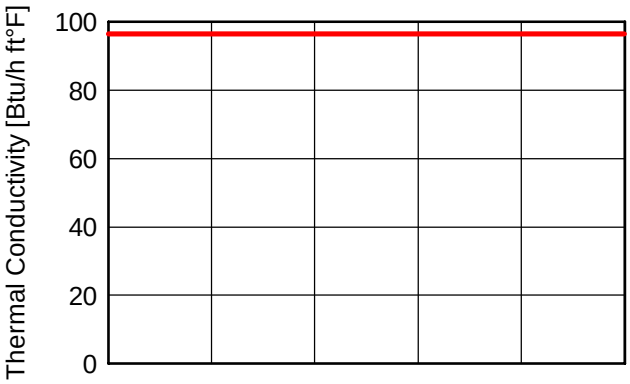

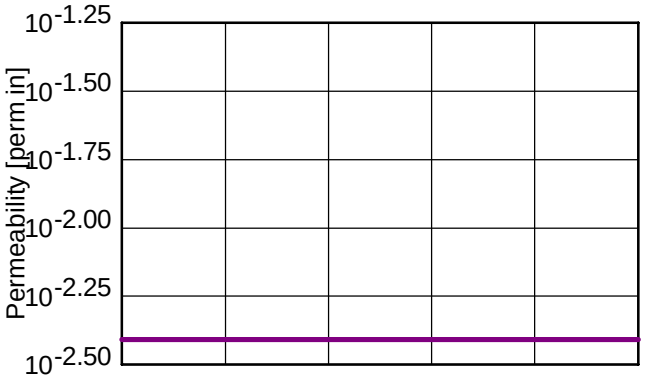

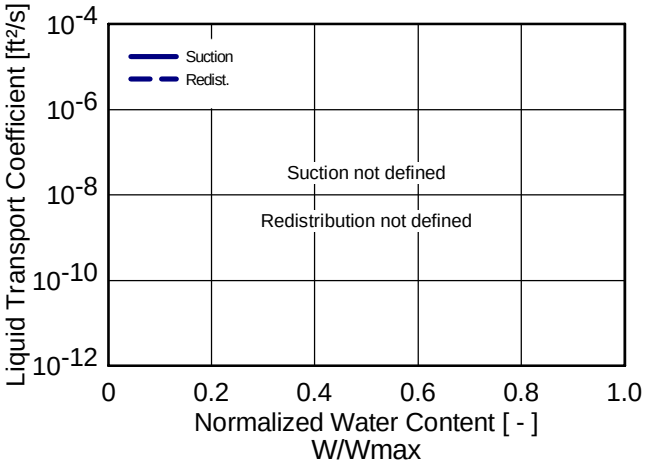

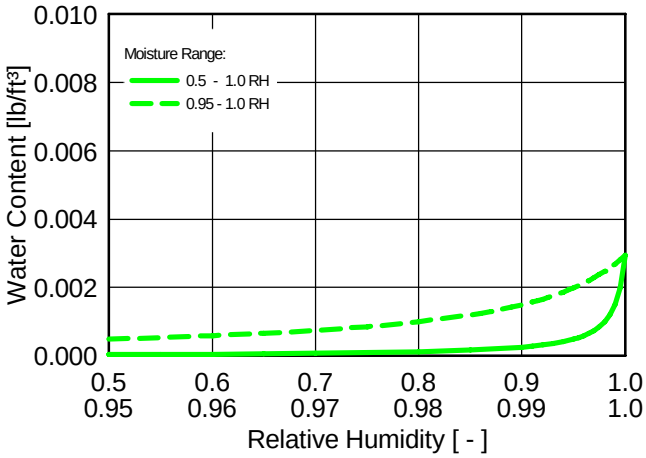

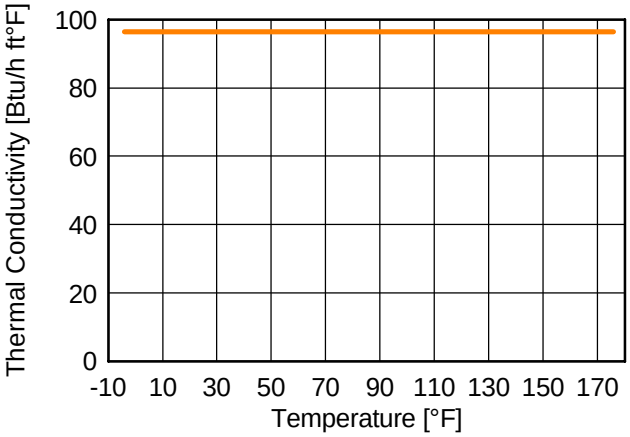

Boundary Conditions

Exterior (Left Side)

Location: Baltimore, MD; ASHRAE Year 2
Temperature Shift: 0.0 °F
Orientation / Inclination: North-East / 0 °

Interior (Right Side)

Indoor Climate: ASHRAE 160P
Air-conditioning; 5.04 °F; 68 °F; 74 °F
M.Rate 0.83 lb/h; A.Ch.Rate 0.2 1/h; Vol. 17657.3333 ft³
Humidity Ratio Wo -1.0000 lb/lb

Surface Transfer Coefficients

Exterior (Left Side)

Name	Description	Unit	Value
Heat Resistance - includes long-wave radiation	Roof (DIN 68800-2:2012-02)	[h ft² °F/Btu]	0.2987 yes
Permeance	No coating	[perm]	----
Short-Wave Radiation Absorptivity	Bright	[-]	0.2
Long-Wave Radiation Emissivity	Bright	[-]	0.9
Adhering Fraction of Rain	Depending on inclination o	[-]	1.0
Explicit Radiation Balance			yes
Terrestrial Short-Wave Reflectivity		[-]	0.2
Terrestrial Long-Wave Emissivity		[-]	0.9
Terrestrial Long-Wave Reflectivity		[-]	0.1
Cloud Index		[-]	0.66

Interior (Right Side)

Name	Description	Unit	Value
Heat Resistance	Roof (DIN 68800-2:2012-02)	[h ft² °F/Btu]	0.7098
Permeance	No coating	[perm]	----

Results from Last Calculation

Status of Calculation

Calculation: Time and Date	10/22/2021 4:32:17 AM
Computing Time	5 min,16 sec.
Begin / End of calculation	10/1/2021 / 10/1/2026
No. of Convergence Failures	0

Check for numerical quality

Integral of fluxes, left side (kl,dl)	[lb/ft²]	0.0 -0.03
Integral of fluxes, right side (kr,dr)	[lb/ft²]	0.0 0.0
Balance 1	[lb/ft²]	-0.03
Balance 2	[lb/ft²]	-0.03

Water Content [lb/ft²]

	Start	End	Min.	Max.
Total Water Content	0.3	0.27	0.27	0.3

Water Content [lb/ft³]

Layer/Material	Start	End	Min.	Max.
TPO membrane	0.00	0.03	0.00	0.03
GlasRoc® Sheathing (1/2 inch)	2.81	2.86	2.81	3.88
Polyisocyanurate Board, Glass-Matt F	2.06	2.14	2.06	2.69
Polyisocyanurate Board	0.07	0.08	0.06	0.09
Polyisocyanurate Board, Glass-Matt F	2.06	2.06	1.27	2.43
Polyisocyanurate Board	0.08	0.07	0.04	0.08
Polyisocyanurate Board, Glass-Matt F	2.06	1.63	0.75	2.31
3M™ Air and Vapor Barrier 3015	0.00	0.00	0.00	0.00
GlasRoc® Sheathing (5/8 inch)	2.50	1.95	1.62	2.50
*Metal Deck	0.00	0.00	0.00	0.00

Time Integral of fluxes

Heat Flux, left side	[Btu/ft²]	1.9E+0005
Heat Flux, right side	[Btu/ft²]	-23603.29
Moisture Fluxes, left side	[lb/ft²]	34.59
Moisture Fluxes, right side	[lb/ft²]	0.0

Hygrothermal Sources

Hygrothermal Sources (Continue)

Heat Sources	[Btu/ft²]	0.0
Moisture Sources	[lb/ft²]	0.0
Unreleased Moisture Sources (due to cut-off)	[lb/ft²]	0.0

APPENDIX 3:

STRUCTURAL CALCULATIONS

100% DESIGN STRUCTURAL CALCULATIONS

FAA AJR

WARRENTON, VA

MARCH 11, 2022

Jacobs

Structural Calculations

Purpose:

This section defines criteria and develops loads used in analysis of existing and new framing members.

References:

1. IBC 2018. *International Building Code.*
2. ASCE 7-16. *Minimum Design Loads for Buildings and Other Structures.*
3. AISC 360-16 *Specification for Structural Steel Buildings.*
4. Existing Drawings- Athena Controls

Criteria From Existing Drawings: Reference Existing Drawings

Concrete Strength (Walls and Slabs)	$f'_{c.slab} := 4000\ psi$
Other Concrete Strength	$f'_c := 3000\ psi$
Reinforcing Steel A615 Gr 60 Strength	$f_{y.reinf} := 60\ ksi$
Structural Beams A572 G5 50 Strength	$f_y := 50\ ksi$
Roof Superimposed Dead Load	$DL_r := 12\ psf$
Flat Roof Snow Load	$SL_f := 20\ psf$
Soil Bearing Capacity	$BC := 2500\ psf$
Average Building Height	$h := 30\ ft$

Design Criteria

Risk Category	$RC :=$ "II"

Load Combinations per ASCE Chapter 2

Gravity Load Load Combinations :

1) 1.4DL
2) 1.2DL + 1.6LL
3) 1.2DL + 1.0WL + 0.5WL
4) 1.2DL + 1.0WL + 0.5SL

Where DL = Dead Load
LL = Live Load
SL = Snow Load

Load Development

Search by Address | Search by Coordinate

Warrenton, VA, USA | Search

Coordinates: 38.7134516, -77.7952712

Wind | Snow | Tornado | Seismic

Risk Category II ..... 110 mph

Ground Snow Load ..... 30 lb/sqft

Risk Category	II
Site Class	D - Stiff Soil

Print these results | Save these results

Basic Parameters

Name	Value	Description
S_S	0.15	MCE_R ground motion (period=0.2s)
S_1	0.046	MCE_R ground motion (period=1.0s)
S_{MS}	0.24	Site-modified spectral acceleration value
S_{M1}	0.111	Site-modified spectral acceleration value
S_{DS}	0.16	Numeric seismic design value at 0.2s SA
S_{D1}	0.074	Numeric seismic design value at 1.0s SA

Environmental Design Criteria (Reference ATC Load Data Tool)

Ultimate Wind Speed	$V_{ult} := 110\ mph$
Short Period Seismic Acceleration	$S_s := .15$
1-sec Period Seismic Acceleration	$S_1 := .046$
Short Period Seismic Acceleration	$S_{ms} := .24$
1-sec Period Seismic Acceleration	$S_{m1} := .111$
Ground Snow Load	$p_g := 30\ psf$

Snow Loads

Note: all references within this section pertain to ASCE 7-16 unless noted otherwise.

Criteria:

ground snow load	$p_g := 30 \cdot psf$
snow load importance factor per Table 1.5-2	$I_s := 1.0$
exposure factor per Table 7.3-1 (partially exposed)	$C_e := 1.0$
thermal factor per Table 7.3-	$C_t := 1.0$
roof slope factor per Figure 7.4-1 (Warm Roof, low slope)	$C_s := 1.0$

Loads:

flat roof snow load per Eq. 7.3-1	$p_f := 0.7 \cdot C_e \cdot C_t \cdot I_s \cdot p_g = 21.0\ psf$
sloped roof snow load per Eq. 7.4-1	$p_s := C_s \cdot p_f = 21.0\ psf$
minimum roof snow load per Eq. 7.4-1	$p_m := I_s \cdot 20\ psf = 20.0\ psf$
Snow Density per Eq 7.7-1	$\gamma := \frac{(.13 \cdot p_g + 14\ psf)}{ft} = 17.9\ \frac{1}{ft} \cdot psf$
Balanced Snow Height	$h_b := \frac{p_s}{\gamma} = 1.2\ ft$
Additional Sliding Snow Load from Skylight (Ref Sect 7.9)	$p_{sl} := \frac{.4 \cdot p_f \cdot 7.25\ ft}{15\ ft} = 4\ psf$
Valley Snow Load (Ref Sect 7.6.3)	$p_v := \frac{2 \cdot p_f}{C_e} = 42.0\ psf$
Length of Lower Roof	$l_{lr} := 120$

Windward Drift $h_d := \left(.43 \cdot l_{lr}^{\frac{1}{3}} \cdot (p_g + 10)^{\frac{1}{4}} - 1.5\right) \cdot I_s^{\frac{1}{2}} \cdot .75 \cdot ft = 2.9\ ft$ Ref 2 Figure 7.6-1

14' Dimension of skylight does not need to consider drift loads. Drift must be considered at parapet locations and the 22' dimension of the skylight.

Framing Analysis for Skylight Addition.

This section designs new framing members and checks the capacity of existing joist girders to support new skylights. 2 new skylights of size 14' x 22' are added at the roof. The weight of the skylight is 12 psf from the manufacturer.

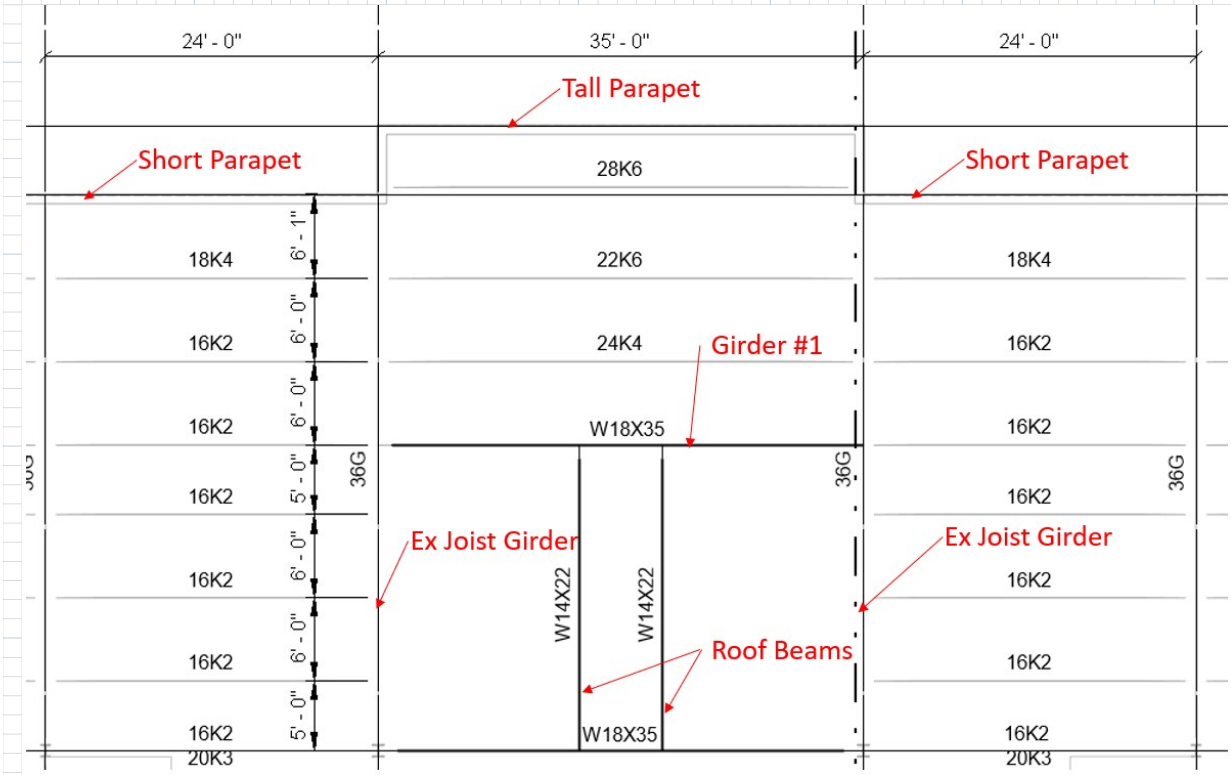

Roof Beam Analysis

Beam Length	$l_{bm} := 22\ ft$	
Beam Width	$w_{bm} := 6\ ft$	
Skylight Width	$w_{sl} := 14.5\ ft$	
Live Load Roof	$LL_{rf} := 20\ psf$	Ref ASCE Table 4.3-1
Dead Load	$DL_{rf} := 15\ psf$	

Considering 2 psf metal deck + 3 psf Insulation + 5 psf MEP + 5 psf Miscellaneous
Skylight Manufacturer States typical weight of skylight is 12 psf

Snow Load- Valley (controls over Live Load)	$SL := p_v = 42\ psf$
Weight of Skylight Curb	$w_{curb} := 20\ plf$

Enercalc Analysis has determined W14x22 is sufficient for these loads.

Note: Infill HSS 2-1/2x2-1/2x1/4 span between the beams and are spaced at 5 ft 6 in on center maximum.

Girder #1 Analysis

Walkway Length $l_g := 35\ ft$

Tributary Width Above $w_n := 3\ ft$

Live Load Roof $LL_{rf} := 20\ psf$ Ref ASCE Table 4.3-1

Dead Load $DL_{rf} := 15\ psf$

Considering 2 psf metal deck + 3 psf Insulation + 5 psf MEP + 5 psf Miscellaneous
Skylight Manufacturer States typical weight of skylight is 12 psf

Snow Load- With Sliding Snow (Controls over Live) $SL := p_f + p_{sl} = 25\ psf$

Weight of Skylight Curb $w_{curb} := 20\ plf$

Enercalc Analysis has determined W18x35 is sufficient for these loads.

Joist Girder Analysis

Joist Girder Length $l_g := 40\ ft$

Tributary Width East $w_E := 12\ ft$

Tributary Width West $w_W := 17.5\ ft$

Live Load Roof $LL_{rf} := 20\ psf$ Ref ASCE Table 4.3-1

Dead Load $DL_{rf} := 15\ psf$

Snow Load adjacent to skylight (with sliding snow) $SL := p_f + p_{sl} = 25\ psf$

Weight of Skylight and Curb (First 22' of Girder) $w_{sky} := 12\ psf \cdot 7.25\ ft + 20\ plf = 107\ plf$

Skylight Snow Load $w_{snow} := 21\ psf \cdot 7.25\ ft = 152\ plf$

Skylight Curb Roof Step
(Including Deck Thk, 6" Roof Thk, Snow Height) $hc_{sky} := 33.5\ ft - \left(30.8\ ft + 1.5\ in + 6\ in + \frac{SL}{\gamma}\right) = 0.68\ ft$

Snow Drift Load from Skylight Curb $SD_{sky} := min\left(h_d, hc_{sky}\right) \cdot \gamma = 12\ psf$

Snow Drift Width from Skylight Curb $WSD_{sky} := min\left(4 \cdot \frac{{h_d}^2}{hc_{sky}}, 8 \cdot hc_{sky}\right) = 5\ ft$

Short Parapet Roof Step
(Including Deck Thk, 6" Roof Thk, Snow Height) $hc_{par} := 34\ ft - \left(31.5\ ft + 1.5\ in + 6\ in + \frac{p_f}{\gamma}\right) = 0.7\ ft$

Snow Drift Load from Short Parapet $SD_{par} := min\left(h_d, hc_{par}\right) \cdot \gamma = 13\ psf$

Snow Drift Width from Short Parapet $WSD_{par} := min\left(4 \cdot \frac{{h_d}^2}{hc_{par}}, 8 \cdot hc_{par}\right) = 6\ ft$

Tall Parapet Roof Step
(Including Deck Thk, 6" Roof Thk, Snow Height) $hc_{par2} := 36\ ft - \left(31.5\ ft + 1.5\ in + 6\ in + \frac{p_f}{\gamma}\right) = 2.7\ ft$

Snow Drift Load from Tall Parapet $SD_{par2} := min\left(h_d, hc_{par2}\right) \cdot \gamma = 48\ psf$

Snow Drift Width from Tall Parapet $WSD_{par2} := min\left(4 \cdot \frac{{h_d}^2}{hc_{par2}}, 8 \cdot hc_{par2}\right) = 12\ ft$

New Joist Girder Loading from (6) Roof Joists

Joist #1 Point Load Dead $J1DL := DL_{rf} \cdot (w_E) \cdot 5.5\ ft = 0.99\ kip$

Joist #1 Point Load Snow $J1SL := SL \cdot (w_E) \cdot 5.5\ ft = 1.65\ kip$

Joist #2 Point Load Dead $J2DL := DL_{rf} \cdot (w_E) \cdot 6\ ft = 1.08\ kip$

Joist #2 Point Load Snow $J2SL := SL \cdot (w_E) \cdot 6\ ft = 1.8\ kip$

Joist #3 Point Load Dead $J3DL := DL_{rf} \cdot (w_E) \cdot 5.5\ ft = 0.99\ kip$

Joist #3 Point Load Snow $J3SL := SL \cdot (w_E) \cdot 5.5\ ft = 1.65\ kip$

Joist #4 Point Load Dead (Includes Girder #1 Reaction) $J4DL := DL_{rf} \cdot (w_E) \cdot 5.5\ ft + 4.45\ kip = 5.44\ kip$

Joist #4 Point Load Snow (Includes Girder #1 Reaction) $J4SL := SL \cdot (w_E) \cdot 5.5\ ft + 5.64\ kip = 7.29\ kip$

Joist #5 Point Load Dead $J5DL := DL_{rf} \cdot (w_E + w_W) \cdot 6\ ft = 2.66\ kip$

Joist #5 Point Load Snow $J5SL := p_f \cdot (w_E + w_W) \cdot 6\ ft = 3.72\ kip$

Joist #6 Point Load Dead $J6DL := DL_{rf} \cdot (w_E + w_W) \cdot 6\ ft = 2.66\ kip$

Joist #6 Point Load Snow

$$J6SL := (p_f + .5 \cdot SD_{par}) \cdot (w_E) \cdot 6\ ft + \left(p_f + .5 \cdot SD_{par2} \cdot \frac{WSD_{par2} - 4.5\ ft}{WSD_{par2}}\right) \cdot (w_W) \cdot 6.3\ ft = 5.97\ kip$$

Joist Girder Analysis

An analysis is conducted of the joist girders that compares the member axial forces between the existing loading and the new loading. An ETABS model of the existing joist comprised of (2) 2x2x1/4 angles is used for this comparison. This analysis utilizes ASD (Unfactored) design, to match the original joist girder design.

Joist Girder Sketch and Dimensions.

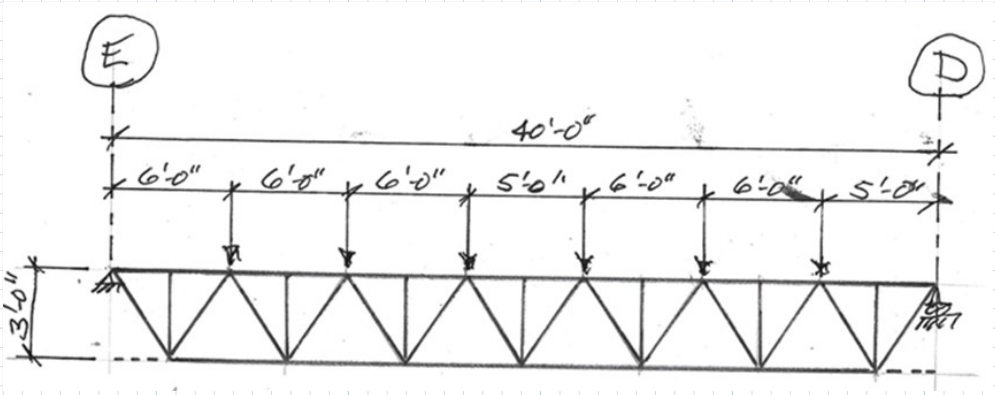

ETABS Member Labels

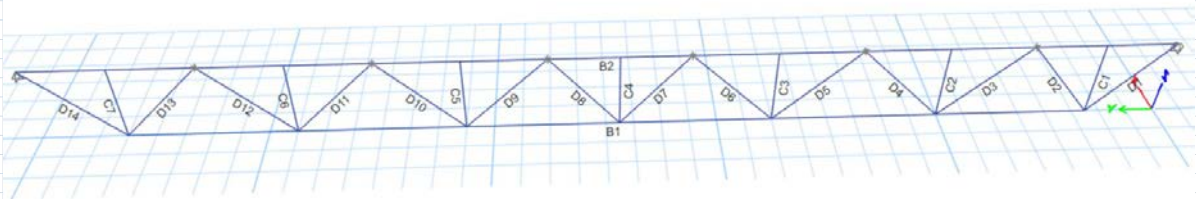

Existing Total Loading on Joist Girder (Reference Existing Drawings)

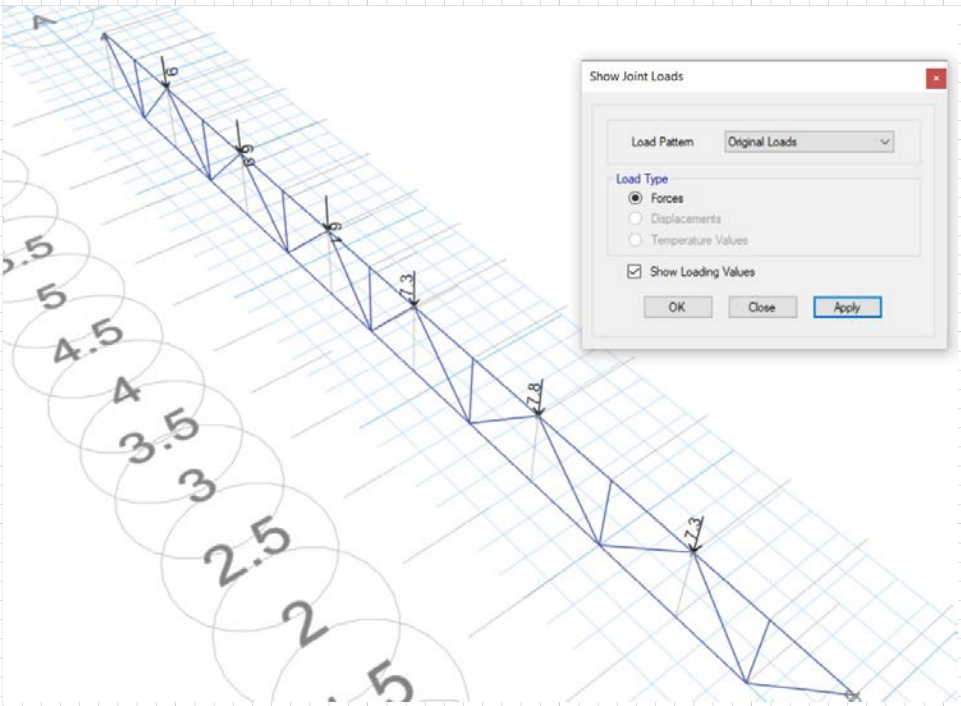

Updated Dead Load on Joist Girder

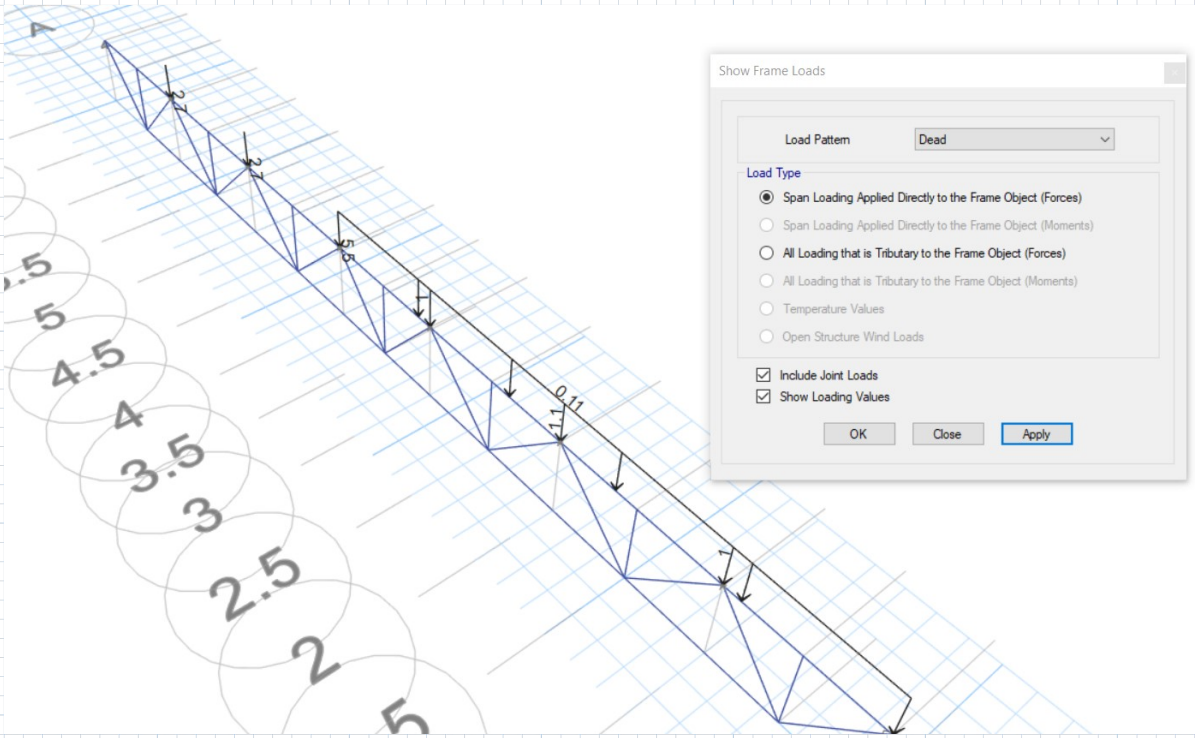

Updated Snow Load on Joist Girder

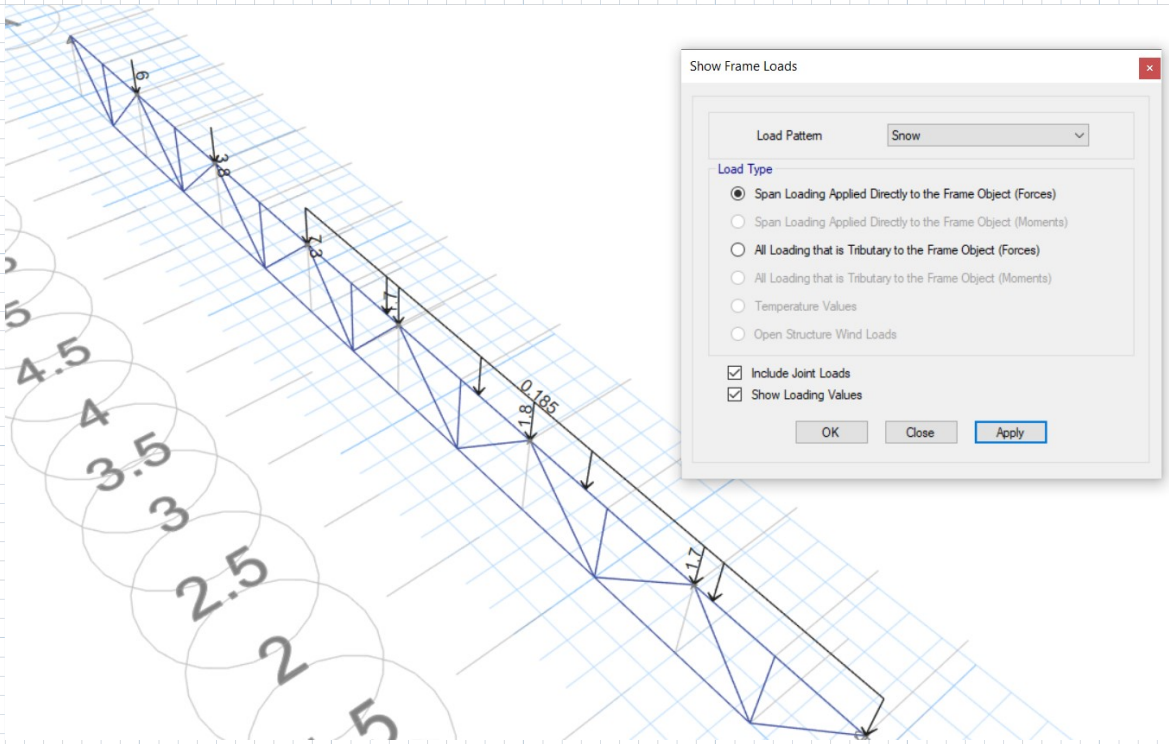

Joist Girder Analysis Results:

The tables on the following page present the results of the joist girder comparison. The results are presented with existing loading (from existing drawings) and new loading (ASD New Dead + Snow Loads). All values are axial forces in a member where positive values are tension forces and negative values are compression.

Existing Axial Force Diagram

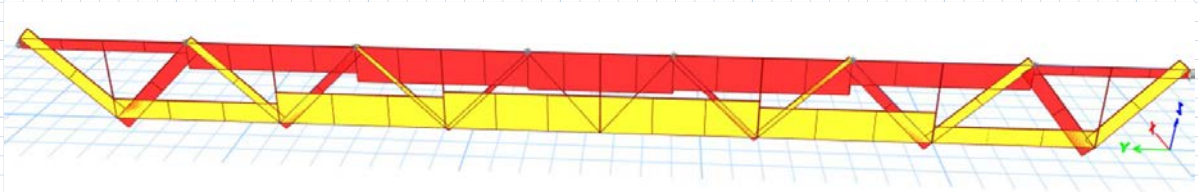

New Load Axial Force Diagram

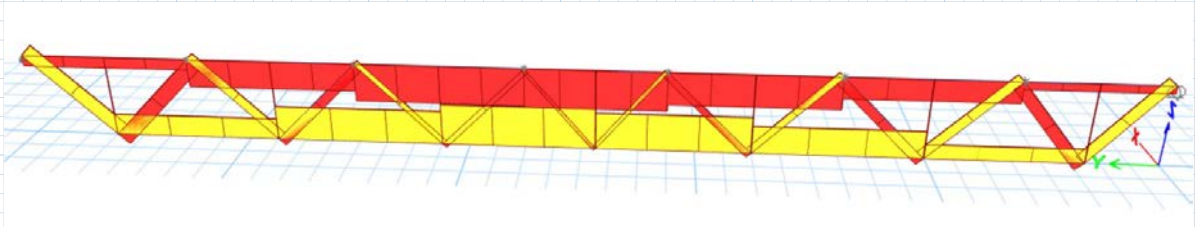

Summary: The maximum tensile force across the entire bottom chord increases by 10%. The maximum compressive force across the entire top chord increases by 4.7%. The maximum force in all of the diagonal braces increase by 4.7% (different diagonal members control for existing and new loading). According to the Existing International Building Code (EIBC 2018). Individual members that have member stress increases over 5% under new loading compared to the existing loading require reinforcing. The bottom chord needs to be reinforced along approximately half of the joist girder length. Although not required, the top chord will be reinforced to match the bottom chord.

Note: By engineering judgement, all vertical members will not be reinforced because the maximum axial loads are 3% of the maximum diagonal member axial loads.

Note: The large percent increases in members D7 and D8 are due to low axial forces under existing conditions. The symmetric loading of the existing condition causes near zero forces in the center members.

The Following pages contains the ETABS output for member axial forces.

Beam	Station	Existing Axial Force	New Loads Axial Force	Percent Increase
	ft	kip	kip	
B2	0	-19.062	-16.591	-13%
B2	1.25	-19.062	-16.591	-13%
B2	2.5	-19.062	-16.591	-13%
B2	2.5	-19.062	-16.591	-13%
B2	3.75	-19.062	-16.591	-13%
B2	5	-19.062	-16.591	-13%
B2	5	-53.481	-47.901	-10%
B2	6.5	-53.481	-47.901	-10%
B2	8	-53.481	-47.901	-10%
B2	8	-53.481	-47.901	-10%
B2	9.5	-53.481	-47.901	-10%
B2	11	-53.481	-47.901	-10%
B2	11	-76.328	-73.022	-4%
B2	12.5	-76.328	-73.022	-4%
B2	14	-76.328	-73.022	-4%
B2	14	-76.328	-73.022	-4%
B2	15.5	-76.328	-73.022	-4%
B2	17	-76.328	-73.022	-4%
B2	17	-83.779	-87.744	5%
B2	18.25	-83.779	-87.744	5%
B2	19.5	-83.779	-87.744	5%
B2	19.5	-83.779	-87.744	5%
B2	20.75	-83.779	-87.744	5%
B2	22	-83.779	-87.744	5%
B2	22	-77.59	-84.162	8%
B2	23.5	-77.59	-84.162	8%
B2	25	-77.59	-84.162	8%
B2	25	-77.59	-84.162	8%
B2	26.5	-77.59	-84.162	8%
B2	28	-77.59	-84.162	8%
B2	28	-58.105	-61.573	6%
B2	29.5	-58.105	-61.573	6%
B2	31	-58.105	-61.573	6%
B2	31	-58.105	-61.573	6%
B2	32.5	-58.105	-61.573	6%
B2	34	-58.105	-61.573	6%
B2	34	-22.453	-23.51	4.7%
B2	35.5	-22.453	-23.51	4.7%
B2	37	-22.453	-23.51	4.7%
B2	37	-22.453	-23.51	4.7%
B2	38.5	-22.453	-23.51	4.7%
B2	40	-22.453	-23.51	4.7%
B2	Max	-19.062	-16.591	-13%
B2	Min	-83.779	-87.744	4.7%
B1	0	38.03	32.429	-15%
B1	1.8333	38.03	32.429	-15%
B1	3.6667	38.03	32.429	-15%
B1	5.5	38.03	32.429	-15%
B1	5.5	68.806	62.367	-9%
B1	7.5	68.806	62.367	-9%
B1	9.5	68.806	62.367	-9%
B1	11.5	68.806	62.367	-9%
B1	11.5	83.709	82.655	-1%
B1	13.3333	83.709	82.655	-1%
B1	15.1667	83.709	82.655	-1%
B1	17	83.709	82.655	-1%
B1	17	83.74	92.088	10%
B1	18.8333	83.74	92.088	10%

Brace	Station	Existing Axial Force	New Loads Axial Force	Percent Increase
	ft	kip	kip	
D1	0	29.766	25.906	-13%
D1	1.9526	29.776	25.916	-13%
D1	3.9051	29.785	25.925	-13%
D2	0	-29.638	-24.75	-16%
D2	1.9526	-29.629	-24.741	-16%
D2	3.9051	-29.619	-24.731	-17%
D3	0	21.841	21.871	0%
D3	2.1213	21.851	21.881	0%
D3	4.2426	21.861	21.89	0%
D4	0	-21.683	-20.467	-6%
D4	2.1213	-21.674	-20.457	-6%
D4	4.2426	-21.664	-20.448	-6%
D5	0	10.628	15.059	42%
D5	2.1213	10.638	15.069	42%
D5	4.2426	10.647	15.078	42%
D6	0	-10.447	-13.632	30%
D6	2.1213	-10.438	-13.623	31%
D6	4.2426	-10.428	-13.613	31%
D7	0	0.1	7.939	7839%
D7	1.9526	0.11	7.949	7126%
D7	3.9051	0.119	7.959	6588%
D8	0	0.052	-6.796	12969%
D8	1.9526	0.062	-6.786	10845%
D8	3.9051	0.072	-6.776	9311%
D9	0	-8.707	-11.218	29%
D9	2.1213	-8.697	-11.208	29%
D9	4.2426	-8.688	-11.199	29%
D10	0	8.884	11.357	28%
D10	2.1213	8.894	11.367	28%
D10	4.2426	8.904	11.376	28%
D11	0	-18.671	-20.589	10%
D11	2.1213	-18.661	-20.579	10%
D11	4.2426	-18.651	-20.57	10%
D12	0	18.835	20.75	10%
D12	2.1213	18.844	20.76	10%
D12	4.2426	18.854	20.77	10%
D13	0	-31.585	-33.08	5%
D13	2.1213	-31.576	-33.07	5%
D13	4.2426	-31.566	-33.06	5%
D14	0	31.744	33.238	5%
D14	2.1213	31.754	33.248	5%
D14	4.2426	31.763	33.257	5%
Brace	Max	31.763	33.257	4.7%
Brace	Min	-31.585	-33.08	4.7%

B1	20.6667	83.74	92.088	10%
B1	22.5	83.74	92.088	10%
B1	22.5	71.301	76.125	7%
B1	24.5	71.301	76.125	7%
B1	26.5	71.301	76.125	7%
B1	28.5	71.301	76.125	7%
B1	28.5	44.78	46.894	5%
B1	30.5	44.78	46.894	5%
B1	32.5	44.78	46.894	5%
B1	34.5	44.78	46.894	5%
B1	Max	83.74	92.088	10%
B1	Min	38.03	32.429	-15%

Reinforcing of Bottom Chord

The bottom chord requires reinforcing because the new loading increases its tensile force by 10%. The bottom chord will be reinforced with a steel plate. The top chord will be reinforced with outset angles of similar area to match the bottom chord reinforcement.

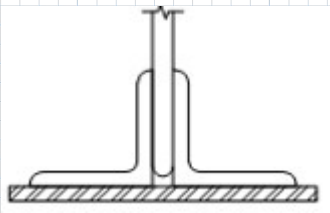

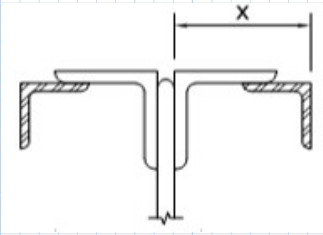

Existing Maximum Tensile Force In bottom chord $P_{ex} := 83.74\ kip$

New Maximum Tensile Force In bottom chord $P_{new} := 92.09\ kip$

Chord Tensile Force Increase $P_{inc} := P_{new} - P_{ex} = 8.4\ kip$

The Joist Girder Chords are reinforced with Angles on the top chord and Plate on the bottom chords, both are A36 Steel

A36 Yield Strength, Ref AISC Table 2-4 $F_y := 36\ ksi$

A36 Ultimate Strength, Ref AISC Table 2-4 $F_u := 58\ ksi$

Area Required, Ref AISC Eq D2-1 $A_g := \max\left(\frac{P_{inc} \cdot 1.67}{F_y}, \frac{P_{inc} \cdot 2}{F_u}\right) = 0.387\ in^2$

Bottom Chord Plate Reinforcement 1/4" thick x 7" wide $A_{pl} := \frac{1}{4}\ in \cdot 7\ in = 1.8\ in^2$

Top Chord Plate Reinforcement (2) 2"x2"x1/4" angles $A_{ang} := 2 \cdot 0.944\ in^2 = 1.9\ in^2$

The bottom chord will be reinforced with 1/4" thick x 7" wide A36 Plate. The top chord will be reinforced with (2) 2"x2"x1/4" angles.

Project Title:
Engineer:
Project ID:
Project Descr:

Steel Beam

File = C:\Users\mackaic\DOCUME~1\Projects\FAA\FAAWAR~1\CALCS\Beam Calc.ec6 .
Software copyright ENERCALC, INC. 1983-2018, Build:10.18.12.22 .

Lic. # : KW-06009587 | Licensee : JACOBS ENGINEERING

Description : Infill Tubes Between Skylights

CODE REFERENCES

Calculations per AISC 360-10, IBC 2012, CBC 2013, ASCE 7-10
Load Combination Set : ASCE 7-16

Material Properties

Analysis Method : Load Resistance Factor Design
Beam Bracing : Completely Unbraced
Bending Axis : Major Axis Bending

Fy : Steel Yield : 42.0 ksi
E: Modulus : 29,000.0 ksi

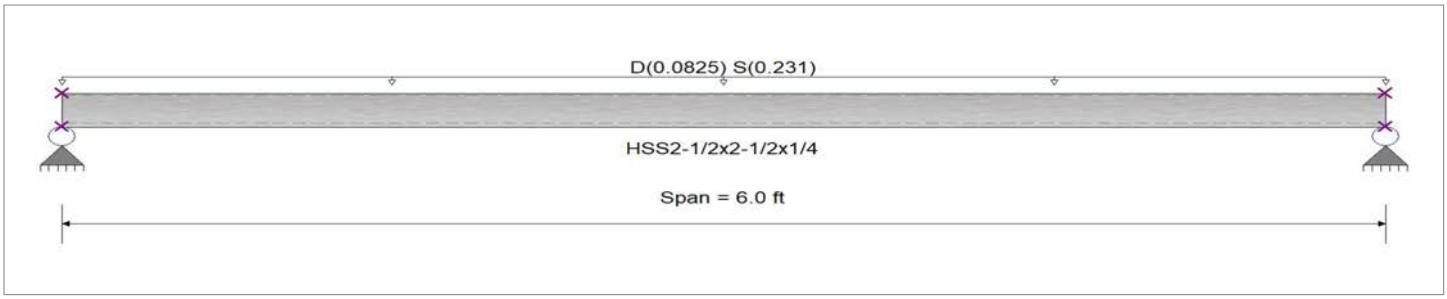

Applied Loads

Service loads entered. Load Factors will be applied for calculations.

Beam self weight calculated and added to loading
Uniform Load : D = 0.0150, S = 0.0420 ksf, Tributary Width = 5.50 ft, (Roof Deck Load (Valley Snow))

DESIGN SUMMARY

Design OK

Maximum Bending Stress Ratio = **0.418** : 1
Section used for this span **HSS2-1/2x2-1/2x1/4**
Mu : Applied 2.147 k-ft
Mn * Phi : Allowable 5.135 k-ft
Load Combination +1.20D+L+1.60S+1.60H
Location of maximum on span 3.000 ft
Span # where maximum occurs Span # 1

Maximum Shear Stress Ratio = **0.075** : 1
Section used for this span **HSS2-1/2x2-1/2x1/4**
Vu : Applied 1.431 k
Vn * Phi : Allowable 19.035 k
Load Combination +1.20D+L+1.60S+1.60H
Location of maximum on span 0.000 ft
Span # where maximum occurs Span # 1

Maximum Deflection

Max Downward Transient Deflection	0.143 in	Ratio =	502 >=360
Max Upward Transient Deflection	0.000 in	Ratio =	0 <360
Max Downward Total Deflection	0.199 in	Ratio =	362 >=240
Max Upward Total Deflection	0.000 in	Ratio =	0 <240

Maximum Forces & Stresses for Load Combinations

Load Combination		Max Stress Ratios		Summary of Moment Values							Summary of Shear Values		
Segment Length	Span #	M	V	max Mu +	max Mu -	Mu Max	Mnx	Phi*Mnx	Cb	Rm	VuMax	Vnx	Phi*Vnx
+1.40D+1.60H													
Dsgn. L = 6.00 ft	1	0.110	0.020	0.56		0.56	5.71	5.13	1.14	1.00	0.38	21.15	19.03
+1.20D+0.50Lr+1.60L+1.60H													
Dsgn. L = 6.00 ft	1	0.094	0.017	0.48		0.48	5.71	5.13	1.14	1.00	0.32	21.15	19.03
+1.20D+1.60L+0.50S+1.60H													
Dsgn. L = 6.00 ft	1	0.195	0.035	1.00		1.00	5.71	5.13	1.14	1.00	0.67	21.15	19.03
+1.20D+1.60Lr+L+1.60H													
Dsgn. L = 6.00 ft	1	0.094	0.017	0.48		0.48	5.71	5.13	1.14	1.00	0.32	21.15	19.03
+1.20D+1.60Lr+0.50W+1.60H													
Dsgn. L = 6.00 ft	1	0.094	0.017	0.48		0.48	5.71	5.13	1.14	1.00	0.32	21.15	19.03
+1.20D+L+1.60S+1.60H													
Dsgn. L = 6.00 ft	1	0.418	0.075	2.15		2.15	5.71	5.13	1.14	1.00	1.43	21.15	19.03
+1.20D+1.60S+0.50W+1.60H													
Dsgn. L = 6.00 ft	1	0.418	0.075	2.15		2.15	5.71	5.13	1.14	1.00	1.43	21.15	19.03
+1.20D+0.50Lr+L+W+1.60H													
Dsgn. L = 6.00 ft	1	0.094	0.017	0.48		0.48	5.71	5.13	1.14	1.00	0.32	21.15	19.03
+1.20D+L+0.50S+W+1.60H													
Dsgn. L = 6.00 ft	1	0.195	0.035	1.00		1.00	5.71	5.13	1.14	1.00	0.67	21.15	19.03
+0.90D+W+1.60H													
Dsgn. L = 6.00 ft	1	0.071	0.013	0.36		0.36	5.71	5.13	1.14	1.00	0.24	21.15	19.03
+1.20D+L+0.20S+E+1.90H													
Dsgn. L = 6.00 ft	1	0.135	0.024	0.69		0.69	5.71	5.13	1.14	1.00	0.46	21.15	19.03
+0.90D+E+0.90H													
Dsgn. L = 6.00 ft	1	0.071	0.013	0.36		0.36	5.71	5.13	1.14	1.00	0.24	21.15	19.03

Project Title:
Engineer:
Project ID:
Project Descr:

Steel Beam

File = C:\Users\mackaic\DOCUME~1\Projects\FAA\FAAWAR~1\CALCS\Beam Calc.ec6 .
Software copyright ENERCALC, INC. 1983-2018, Build:10.18.12.22 .

Lic. # : KW-06009587 **Licensee : JACOBS ENGINEERING**

Description : Infill Tubes Between Skylights

Overall Maximum Deflections

Load Combination	Span	Max. "-" Defl	Location in Span	Load Combination	Max. "+" Defl	Location in Span
+D+S+H	1	0.1987	3.017		0.0000	0.000

Vertical Reactions

Support notation : Far left is #1 Values in KIPS

Load Combination	Support 1	Support 2
Overall MAXimum	0.962	0.962
Overall MINimum	0.161	0.161
+D+H	0.269	0.269
+D+L+H	0.269	0.269
+D+Lr+H	0.269	0.269
+D+S+H	0.962	0.962
+D+0.750Lr+0.750L+H	0.269	0.269
+D+0.750L+0.750S+H	0.788	0.788
+D+0.60W+H	0.269	0.269
+D+0.750Lr+0.450W+H	0.269	0.269
+D+0.750S+0.450W+H	0.788	0.788
+0.60D+0.60W+0.60H	0.161	0.161
+D+0.70E+0.60H	0.269	0.269
+D+0.750L+0.750S+0.5250E+H	0.788	0.788
+0.60D+0.70E+H	0.161	0.161
D Only	0.269	0.269
Lr Only		
L Only		
S Only	0.693	0.693
W Only		
E Only		
H Only		

Project Title:
Engineer:
Project ID:
Project Descr:

Steel Beam

File = C:\Users\mackaic\DOCUME~1\Projects\FAA\FAAWAR~1\CALCS\Beam Calc.ec6 .
Software copyright ENERCALC, INC. 1983-2018, Build:10.18.12.22 .

Lic. # : KW-06009587 Licensee : JACOBS ENGINEERING

Description : Beam Between Skylights

CODE REFERENCES

Calculations per AISC 360-10, IBC 2012, CBC 2013, ASCE 7-10
Load Combination Set : ASCE 7-16

Material Properties

Analysis Method : Load Resistance Factor Design
Beam Bracing : Beam is Fully Braced against lateral-torsional buckling
Bending Axis : Major Axis Bending

Fy : Steel Yield : 50.0 ksi
E: Modulus : 29,000.0 ksi

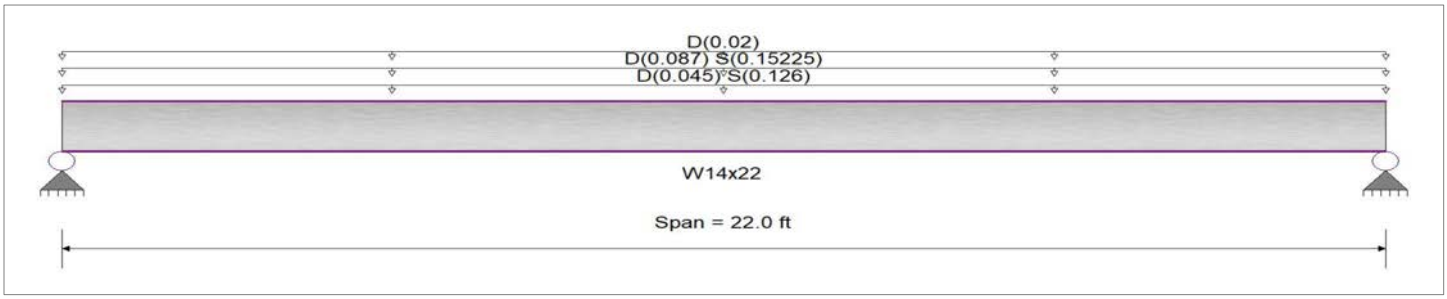

Applied Loads

Service loads entered. Load Factors will be applied for calculations.

Beam self weight calculated and added to loading
Uniform Load : D = 0.0150, S = 0.0420 ksf, Tributary Width = 3.0 ft, (Valley Strip Load)

Uniform Load : D = 0.0120, S = 0.0210 ksf, Tributary Width = 7.250 ft, (Skylight Load)

Uniform Load : D = 0.020 k/ft, Tributary Width = 1.0 ft, (Weight of Curb)

DESIGN SUMMARY

Design OK

Maximum Bending Stress Ratio =	0.318 : 1	Maximum Shear Stress Ratio =	0.076 : 1
Section used for this span	W14x22	Section used for this span	W14x22
Mu : Applied	39.574 k-ft	Vu : Applied	7.195 k
Mn * Phi : Allowable	124.500 k-ft	Vn * Phi : Allowable	94.530 k
Load Combination	+1.20D+L+1.60S+1.60H	Load Combination	+1.20D+L+1.60S+1.60H
Location of maximum on span	11.000 ft	Location of maximum on span	0.000 ft
Span # where maximum occurs	Span # 1	Span # where maximum occurs	Span # 1

Maximum Deflection

Max Downward Transient Deflection	0.255 in	Ratio =	1,034 >=360
Max Upward Transient Deflection	0.000 in	Ratio =	0 <360
Max Downward Total Deflection	0.415 in	Ratio =	636 >=240
Max Upward Total Deflection	0.000 in	Ratio =	0 <240

Maximum Forces & Stresses for Load Combinations

Load Combination		Max Stress Ratios		Summary of Moment Values							Summary of Shear Values		
Segment Length	Span #	M	V	max Mu +	max Mu -	Mu Max	Mnx	Phi*Mnx	Cb	Rm	VuMax	Vnx	Phi*Vnx
+1.40D+1.60H													
Dsgn. L = 22.00 ft	1	0.118	0.028	14.75		14.75	138.33	124.50	1.00	1.00	2.68	94.53	94.53
+1.20D+0.50Lr+1.60L+1.60H													
Dsgn. L = 22.00 ft	1	0.102	0.024	12.64		12.64	138.33	124.50	1.00	1.00	2.30	94.53	94.53
+1.20D+1.60L+0.50S+1.60H													
Dsgn. L = 22.00 ft	1	0.169	0.040	21.06		21.06	138.33	124.50	1.00	1.00	3.83	94.53	94.53
+1.20D+1.60Lr+L+1.60H													
Dsgn. L = 22.00 ft	1	0.102	0.024	12.64		12.64	138.33	124.50	1.00	1.00	2.30	94.53	94.53
+1.20D+1.60Lr+0.50W+1.60H													
Dsgn. L = 22.00 ft	1	0.102	0.024	12.64		12.64	138.33	124.50	1.00	1.00	2.30	94.53	94.53
+1.20D+L+1.60S+1.60H													
Dsgn. L = 22.00 ft	1	0.318	0.076	39.57		39.57	138.33	124.50	1.00	1.00	7.20	94.53	94.53
+1.20D+1.60S+0.50W+1.60H													
Dsgn. L = 22.00 ft	1	0.318	0.076	39.57		39.57	138.33	124.50	1.00	1.00	7.20	94.53	94.53
+1.20D+0.50Lr+L+W+1.60H													
Dsgn. L = 22.00 ft	1	0.102	0.024	12.64		12.64	138.33	124.50	1.00	1.00	2.30	94.53	94.53
+1.20D+L+0.50S+W+1.60H													
Dsgn. L = 22.00 ft	1	0.169	0.040	21.06		21.06	138.33	124.50	1.00	1.00	3.83	94.53	94.53

Project Title:
Engineer:
Project ID:
Project Descr:

Steel Beam

File = C:\Users\mackaic\DOCUME~1\Projects\FAA\FAAWAR~1\CALCS\Beam Calc.ec6 .
Software copyright ENERCALC, INC. 1983-2018, Build:10.18.12.22 .

Lic. # : KW-06009587 **Licensee : JACOBS ENGINEERING**

Description : Beam Between Skylights

Load Combination		Max Stress Ratios		Summary of Moment Values							Summary of Shear Values		
Segment Length	Span #	M	V	max Mu +	max Mu -	Mu Max	Mnx	Phi*Mnx	Cb	Rm	VuMax	Vnx	Phi*Vnx
+0.90D+W+1.60H													
Dsgn. L = 22.00 ft	1	0.076	0.018	9.48		9.48	138.33	124.50	1.00	1.00	1.72	94.53	94.53
+1.20D+L+0.20S+E+1.90H													
Dsgn. L = 22.00 ft	1	0.129	0.031	16.01		16.01	138.33	124.50	1.00	1.00	2.91	94.53	94.53
+0.90D+E+0.90H													
Dsgn. L = 22.00 ft	1	0.076	0.018	9.48		9.48	138.33	124.50	1.00	1.00	1.72	94.53	94.53

Overall Maximum Deflections

Load Combination	Span	Max. "-" Defl	Location in Span	Load Combination	Max. "+" Defl	Location in Span
+D+S+H	1	0.4150	11.063		0.0000	0.000

Vertical Reactions

Support notation : Far left is #1 Values in KIPS

Load Combination	Support 1	Support 2
Overall MAXimum	4.976	4.976
Overall MINimum	1.149	1.149
+D+H	1.915	1.915
+D+L+H	1.915	1.915
+D+Lr+H	1.915	1.915
+D+S+H	4.976	4.976
+D+0.750Lr+0.750L+H	1.915	1.915
+D+0.750L+0.750S+H	4.211	4.211
+D+0.60W+H	1.915	1.915
+D+0.750Lr+0.450W+H	1.915	1.915
+D+0.750S+0.450W+H	4.211	4.211
+0.60D+0.60W+0.60H	1.149	1.149
+D+0.70E+0.60H	1.915	1.915
+D+0.750L+0.750S+0.5250E+H	4.211	4.211
+0.60D+0.70E+H	1.149	1.149
D Only	1.915	1.915
Lr Only		
L Only		
S Only	3.061	3.061
W Only		
E Only		
H Only		

Project Title:
Engineer:
Project ID:
Project Descr:

Steel Beam

File = C:\Users\mackaic\DOCUME~1\Projects\FAA\FAAWAR~1\CALCS\Beam Calc.ec6 .
Software copyright ENERCALC, INC. 1983-2018, Build:10.18.12.22 .

Lic. # : KW-06009587 **Licensee : JACOBS ENGINEERING**

Description : Skylight Girder #1

CODE REFERENCES

Calculations per AISC 360-10, IBC 2012, CBC 2013, ASCE 7-10
Load Combination Set : ASCE 7-16

Material Properties

Analysis Method : Load Resistance Factor Design
Beam Bracing : Beam is Fully Braced against lateral-torsional buckling
Bending Axis : Major Axis Bending

Fy : Steel Yield : 50.0 ksi
E: Modulus : 29,000.0 ksi

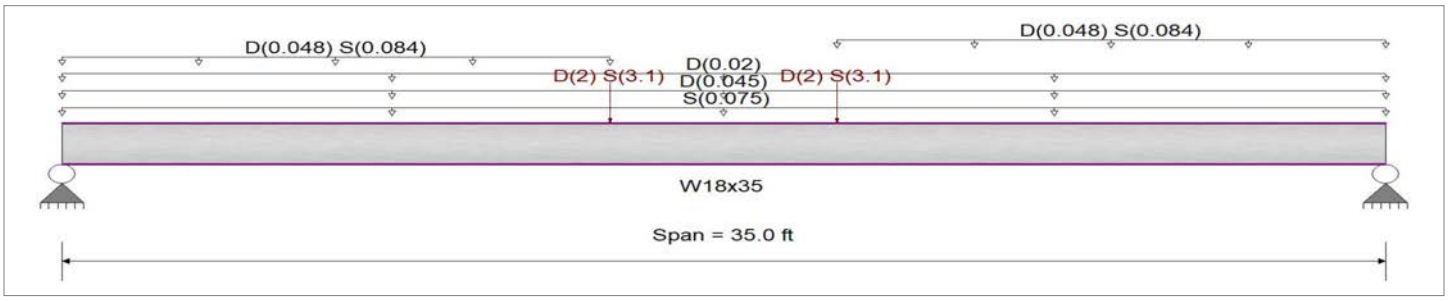

Applied Loads

Service loads entered. Load Factors will be applied for calculatior

Beam self weight calculated and added to loading

Uniform Load : S = 0.0250 ksf, Tributary Width = 3.0 ft, (North side snow)

Uniform Load : D = 0.0150 ksf, Tributary Width = 3.0 ft, (North Side Dead)

Point Load : D = 2.0, S = 3.10 k @ 14.50 ft, (Beam #1)

Point Load : D = 2.0, S = 3.10 k @ 20.50 ft, (Beam #2)

Uniform Load : D = 0.020 k/ft, Tributary Width = 1.0 ft, (Skylight Curb)

Uniform Load : D = 0.0120, S = 0.0210 ksf, Extent = 0.0 -->> 14.50 ft, Tributary Width = 4.0 ft, (Skylight #1 Load)

Uniform Load : D = 0.0120, S = 0.0210 ksf, Extent = 20.50 -->> 35.0 ft, Tributary Width = 4.0 ft, (Skylight Load)

DESIGN SUMMARY

Design OK

Maximum Bending Stress Ratio =	0.656 : 1	Maximum Shear Stress Ratio =	0.090 : 1
Section used for this span	W18x35	Section used for this span	W18x35
Mu : Applied	163.665 k-ft	Vu : Applied	14.345 k
Mn * Phi : Allowable	249.375 k-ft	Vn * Phi : Allowable	159.30 k
Load Combination	+1.20D+L+1.60S+1.60H	Load Combination	+1.20D+L+1.60S+1.60H
Location of maximum on span	17.500ft	Location of maximum on span	0.000 ft
Span # where maximum occurs	Span # 1	Span # where maximum occurs	Span # 1

Maximum Deflection

Max Downward Transient Deflection	0.934 in	Ratio =	449 >=360
Max Upward Transient Deflection	0.000 in	Ratio =	0 <360
Max Downward Total Deflection	1.647 in	Ratio =	255 >=240
Max Upward Total Deflection	0.000 in	Ratio =	0 <240

Maximum Forces & Stresses for Load Combinations

Load Combination		Max Stress Ratios		Summary of Moment Values							Summary of Shear Values		
Segment Length	Span #	M	V	max Mu +	max Mu -	Mu Max	Mnx	Phi*Mnx	Cb	Rm	VuMax	Vnx	Phi*Vnx
+1.40D+1.60H													
Dsgn. L = 35.00 ft	1	0.277	0.039	69.12		69.12	277.08	249.38	1.00	1.00	6.23	159.30	159.30
+1.20D+0.50Lr+1.60L+1.60H													
Dsgn. L = 35.00 ft	1	0.238	0.033	59.24		59.24	277.08	249.38	1.00	1.00	5.34	159.30	159.30
+1.20D+1.60L+0.50S+1.60H													
Dsgn. L = 35.00 ft	1	0.368	0.051	91.87		91.87	277.08	249.38	1.00	1.00	8.15	159.30	159.30
+1.20D+1.60Lr+L+1.60H													

Project Title:
Engineer:
Project ID:
Project Descr:

Steel Beam

File = C:\Users\mackaic\DOCUME~1\Projects\FAA\FAAWAR~1\CALCS\Beam Calc.ec6 .
Software copyright ENERCALC, INC. 1983-2018, Build:10.18.12.22 .

Lic. # : KW-06009587 **Licensee : JACOBS ENGINEERING**

Description : Skylight Girder #1

Load Combination		Max Stress Ratios		Summary of Moment Values							Summary of Shear Values		
Segment Length	Span #	M	V	max Mu +	max Mu -	Mu Max	Mnx	Phi*Mnx	Cb	Rm	VuMax	Vnx	Phi*Vnx
Dsgn. L = 35.00 ft	1	0.238	0.033	59.24		59.24	277.08	249.38	1.00	1.00	5.34	159.30	159.30
+1.20D+1.60Lr+0.50W+1.60H													
Dsgn. L = 35.00 ft	1	0.238	0.033	59.24		59.24	277.08	249.38	1.00	1.00	5.34	159.30	159.30
+1.20D+L+1.60S+1.60H													
Dsgn. L = 35.00 ft	1	0.656	0.090	163.67		163.67	277.08	249.38	1.00	1.00	14.35	159.30	159.30
+1.20D+1.60S+0.50W+1.60H													
Dsgn. L = 35.00 ft	1	0.656	0.090	163.67		163.67	277.08	249.38	1.00	1.00	14.35	159.30	159.30
+1.20D+0.50Lr+L+W+1.60H													
Dsgn. L = 35.00 ft	1	0.238	0.033	59.24		59.24	277.08	249.38	1.00	1.00	5.34	159.30	159.30
+1.20D+L+0.50S+W+1.60H													
Dsgn. L = 35.00 ft	1	0.368	0.051	91.87		91.87	277.08	249.38	1.00	1.00	8.15	159.30	159.30
+0.90D+W+1.60H													
Dsgn. L = 35.00 ft	1	0.178	0.025	44.43		44.43	277.08	249.38	1.00	1.00	4.00	159.30	159.30
+1.20D+L+0.20S+E+1.90H													
Dsgn. L = 35.00 ft	1	0.290	0.041	72.29		72.29	277.08	249.38	1.00	1.00	6.46	159.30	159.30
+0.90D+E+0.90H													
Dsgn. L = 35.00 ft	1	0.178	0.025	44.43		44.43	277.08	249.38	1.00	1.00	4.00	159.30	159.30

Overall Maximum Deflections

Load Combination	Span	Max. "-" Defl	Location in Span	Load Combination	Max. "+" Defl	Location in Span
+D+S+H	1	1.6470	17.600		0.0000	0.000

Vertical Reactions

Support notation : Far left is #1 Values in KIPS

Load Combination	Support 1	Support 2
Overall MAXimum	10.078	10.078
Overall MINimum	2.668	2.668
+D+H	4.447	4.447
+D+L+H	4.447	4.447
+D+Lr+H	4.447	4.447
+D+S+H	10.078	10.078
+D+0.750Lr+0.750L+H	4.447	4.447
+D+0.750L+0.750S+H	8.670	8.670
+D+0.60W+H	4.447	4.447
+D+0.750Lr+0.450W+H	4.447	4.447
+D+0.750S+0.450W+H	8.670	8.670
+0.60D+0.60W+0.60H	2.668	2.668
+D+0.70E+0.60H	4.447	4.447
+D+0.750L+0.750S+0.5250E+H	8.670	8.670
+0.60D+0.70E+H	2.668	2.668
D Only	4.447	4.447
Lr Only		
L Only		
S Only	5.631	5.631
W Only		
E Only		
H Only		

Analysis of Roof Framing for New Mechanical Equipment

Existing 20K3 Joist capacity check for new 3.2 kip mechanical loading (in place of existing mechanical unit)

Joist Criteria

Joist Length $l_j := 24\ ft$

Tributary Load Width $w_{trib} := \frac{40\ ft}{7} \cdot \frac{1}{2} = 2.9\ ft$

Live Load Roof $LL_{rf} := 20\ psf$ Ref ASCE Table 4.3-1

Dead Load $DL_{rf} := 15\ psf$

Considering 2 psf metal deck + 3 psf Insulation + 5 psf MEP + 5 psf Miscellaneous

Snow Load- (Controls over Live) $SL := p_f = 21\ psf$

Drift load does not need to be considered for projections less than 15 ft per ASCE 7 Sect 7.8

Weight of Mechanical Equipment $W_{mech} := 3200\ lbf$

Maximum moment on joist (strength)

$$M_{max} := \frac{(1.2 \cdot DL_{rf} + 1.6 \cdot SL) \cdot w_{trib} \cdot l_j^2}{8} + \frac{1.2\ W_{mech} \cdot l_j}{4} = 34\ kip \cdot ft$$

Allowable moment on joist (strength)

$$M_{allow} := \frac{535\ plf \cdot l_j^2}{8} = 39\ kip \cdot ft$$

Maximum moment (Deflection-Unfactored)

$$M_{max} := \frac{(DL_{rf} + SL) \cdot w_{trib} \cdot l_j^2}{8} + \frac{W_{mech} \cdot l_j}{4} = 27\ kip \cdot ft$$

Allowable moment (Deflection-Unfactored)

$$M_{allow} := \frac{302\ plf \cdot l_j^2}{8} \cdot \left(\frac{360}{240}\right) = 33\ kip \cdot ft$$

Note: conservatively considering mechanical unit load concentrated at mid-span of joist.

Joist Designation	18K3	18K4	18K5	18K6	18K7	18K9	18K10	20K3
Depth (In.)	18	18	18	18	18	18	18	20
Approx. Wt. (lbs./ft.)	6.4	7.2	7.7	8.4	8.9	10.1	11.6	6.5
Span (ft.) ↓								
18	825 550	825 550	825 550	825 550	825 550	825 550	825 550	
19	771 494	825 523	825 523	825 523	825 523	825 523	825 523	825 550
20	694 423	825 490	825 490	825 490	825 490	825 490	825 490	775 517
21	630 364	759 426	825 460	825 460	825 460	825 460	825 460	702 453
22	573 316	690 370	777 414	825 438	825 438	825 438	825 438	639 393
23	523 276	630 323	709 362	774 393	825 418	825 418	825 418	583 344
24	480 242	577 284	651 318	709 345	789 382	825 396	825 396	535 302

Reference Vulcraft Joist Catalog 2017- LRFD

Joist End Reaction Load (Maximum) $P_{react} := \frac{(DL_{rf} + SL) \cdot w_{trib} \cdot l_j}{2} + \frac{W_{mech}}{2} = 2834\ lbf$

Note: considering all mechanical weight is transferred to 2 joists and conservatively assuming all equipment load on a joist transfers to a single end support.

Existing Joist End Reaction Load $P_{react.exist} := 3900\ lbf$

By comparison, the load on the joist is being reduced compared to loads shown on drawings. This is understandable as the size of the units are approximately halved (and presumably, approximately halved in weight) and no snow drift needs to be considered on the new equipment, where the existing equipment would require snow drift loads.

Therefore, the loads on the existing joist girder are reduced and joist girder is sufficient for the new mechanical unit.

Analysis Framing for New Front Stairs.

A pair of new stairs are being added to the front entrance. The stairs land on an upper level walkway.

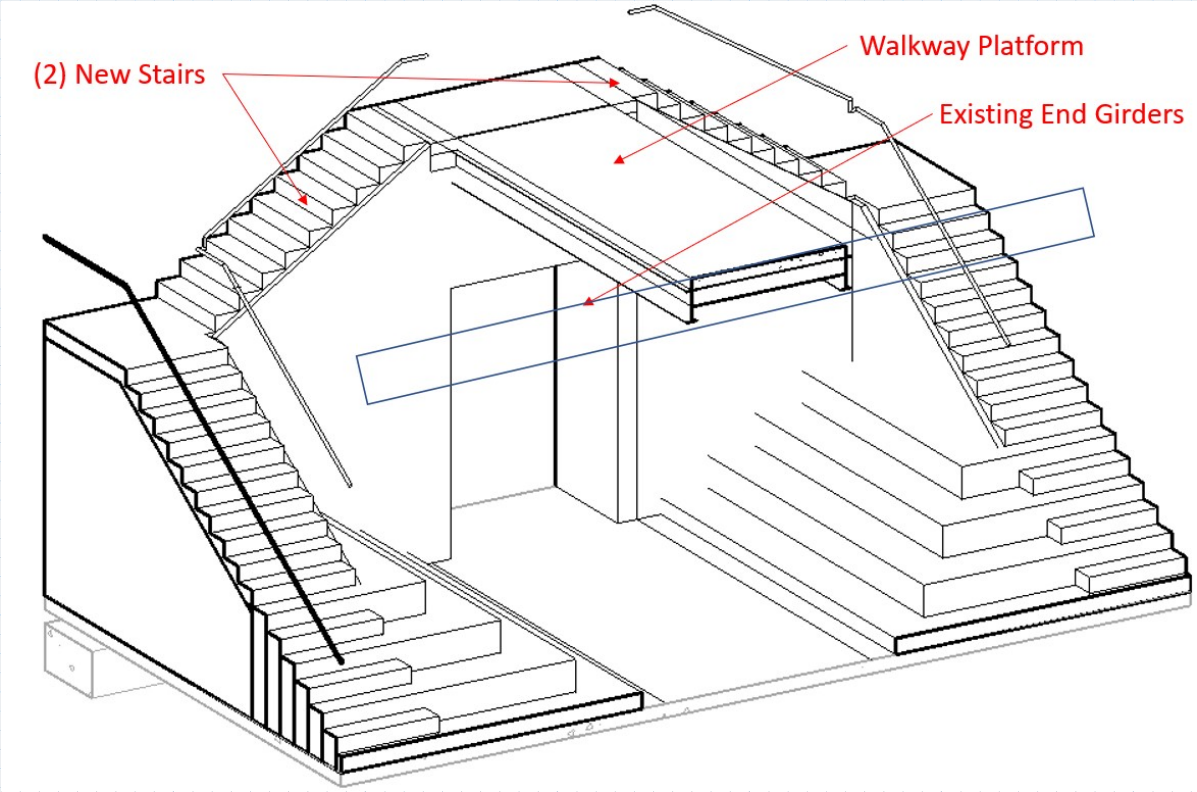

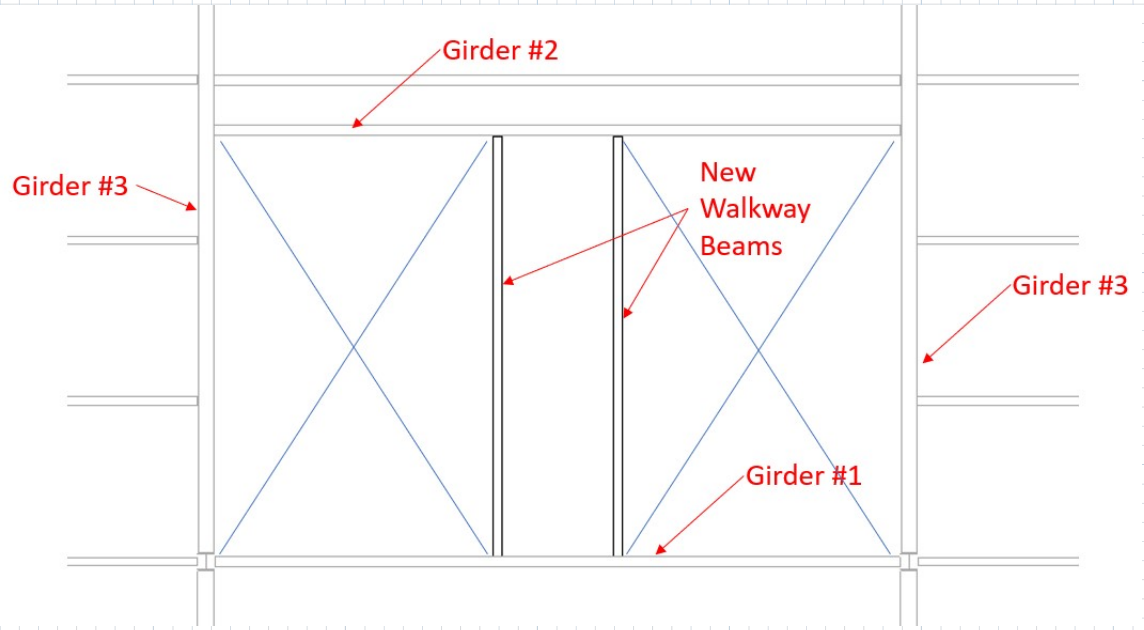

Walkway Beams Analysis

Walkway Length	$l_{ww} := 21.5\ ft$	
Walkway Width	$w_{ww} := 6\ ft$	
Live Load Walkway (Assembly Area)	$LL_{ww} := 100\ psf$	Ref ASCE Table 4.3-1
Dead Load Walkway Considering 10psf MEP/Arch + 44psf 5" concrete filled deck	$DL_{ww} := 10\ psf + 44\ psf = 54\ psf$	
Stair Width	$w_{st} := 4\ ft$	
Stair Length	$l_{st} := 13\ ft$	
Live Load Stairs	$LL_{st} := 100\ psf$	Ref ASCE Table 4.3-1
Dead Load Stairs ***ASSUMED VALUE UNTIL ARCH DESIGN FINALIZED***	$DL_{st} := 50\ psf$	
Live Load Stairs Stringer Point Loads	$LL_{Ps} := LL_{st} \cdot w_{st} \cdot l_{st} \cdot 0.5 = 3\ kip$	
Dead Load Stairs Stringer Point Loads	$DL_{Ps} := DL_{st} \cdot w_{st} \cdot l_{st} \cdot 0.5 = 1\ kip$	
Live Load from Handrail	$LL_{hr} := 50\ plf$	
Dead Load from Glass Rail	$DL_{hr} := 30\ plf$	

Enercalc Analysis of W14x22 beams show framing is sufficient for the above loading.

Existing Composite Girders (#1 and #2) Check
W18x35 with 3"+2" Deck and (12) 0.75" x 4.5" Studs
Girder #1 is near the new stairs, Girder #2 is away from the stairs

Girders Length (#1 and #2)	$l_g := 35\ ft$	
Girder #1 Spacing to nearest girder	$w_g := 3\ ft + 7\ in$	
Girder #2 Spacing to nearest girder	$w_g := 2.5\ ft$	
Live Load Girder (Assembly Area)	$LL_g := 100\ psf$	Ref ASCE Table 4.3-1
Dead Load Girder Considering 15psf MEP/Arch + 44psf 5" concrete filled deck	$DL_g := 10\ psf + 44\ psf = 54\ psf$	
Walkway Beam Dead Load Reaction on to Girder #1	$DL_{P1} := \frac{4.5\ kip}{1.2} = 4\ kip$	
Walkway Beam Live Load Reaction on to Girder #1	$LL_{P1} := \frac{8\ kip}{1.6} = 5\ kip$	
Walkway Beam Dead Load Reaction on to Girder #2	$DL_{P2} := \frac{2.6\ kip}{1.2} = 2\ kip$	
Walkway Beam Live Load Reaction on to Girder #2	$LL_{P2} := \frac{4\ kip}{1.6} = 3\ kip$	

Live Load from Handrail $LL_{hr} := 50\ plf$

Dead Load from Glass Rail $DL_{hr} := 30\ plf$

Enercalc Analysis of the existing composite W18x35 beams shows Girder #1 has insufficient capacity, Girder #2 is sufficient. A 7" x 3/8" plate will be welded to the bottom of Girder #1.

Girder #3- Existing Girder Composite Analysis

This section checks the W24x76 edge girder for composite strength after removal of slab.

Edge Girder Length $l_{eg} := 40\ ft$

Walkway Width 1 $w_{eg1} := 24$

Walkway Width 2 $w_{eg2} := 35\ ft$

Live Load Walkway (Assembly Area) $LL_{ww} := 100\ psf$ Ref ASCE Table 4.3-1

Dead Load Walkway $DL_{ww} := 10\ psf + 44\ psf + \frac{35\ plf}{8\ ft} = 58\ psf$

Considering 15psf MEP/Arch + 44psf 5" concrete filled deck + 35plf/8ft beam weight

Live Load from Handrail $LL_{hr} := 50\ plf$

Dead Load from Glass Rail $DL_{hr} := 30\ plf$

Enercalc Analysis of the existing composite W24x76 beams show framing is sufficient for the above loading.

Existing Columns Check

The total area of floor is reduced by approximately 300 square feet. The framing, decking, and occupancy usage (Assembly/Corridor/Stair) are of similar loads before and after the renovation. By engineering judgment, the total load in the columns will be reduced and does not need to be checked for capacity.

Project Title:
Engineer:
Project ID:
Project Descr:

Steel Beam

File = C:\Users\mackaic\DOCUME~1\Projects\FAA\FAAWAR~1\CALCS\Beam Calc.ec6 .
Software copyright ENERCALC, INC. 1983-2018, Build:10.18.12.22 .

Lic. # : KW-06009587 **Licensee : JACOBS ENGINEERING**

Description : Walkway Beams

CODE REFERENCES

Calculations per AISC 360-10, IBC 2012, CBC 2013, ASCE 7-10
Load Combination Set : ASCE 7-16

Material Properties

Analysis Method : Load Resistance Factor Design
Beam Bracing : Beam is Fully Braced against lateral-torsional buckling
Bending Axis : Major Axis Bending

Fy : Steel Yield : 50.0 ksi
E: Modulus : 29,000.0 ksi

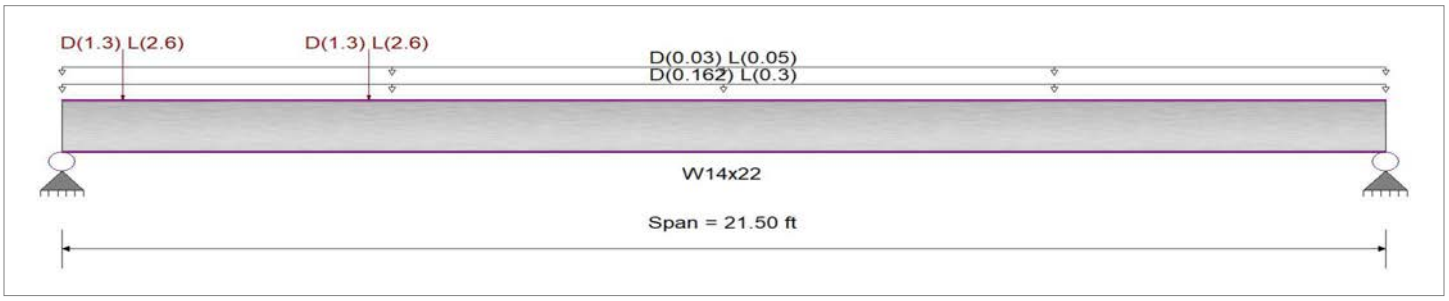

Applied Loads

Service loads entered. Load Factors will be applied for calculatior

Beam self weight calculated and added to loading

Uniform Load : D = 0.0540, L = 0.10 ksf, Tributary Width = 3.0 ft, (Walkway Uniform)

Point Load : D = 1.30, L = 2.60 k @ 1.0 ft, (Stair Stringer #1)

Point Load : D = 1.30, L = 2.60 k @ 5.0 ft, (Stair Stringer #2)

Uniform Load : D = 0.030, L = 0.050 k/ft, Tributary Width = 1.0 ft, (Handrail)

DESIGN SUMMARY

Design OK

Maximum Bending Stress Ratio =	0.529 : 1	Maximum Shear Stress Ratio =	0.197 : 1
Section used for this span	W14x22	Section used for this span	W14x22
Mu : Applied	65.922 k-ft	Vu : Applied	18.626 k
Mn * Phi : Allowable	124.500 k-ft	Vn * Phi : Allowable	94.530 k
Load Combination	+1.20D+0.50Lr+1.60L+1.60H	Load Combination	+1.20D+0.50Lr+1.60L+1.60H
Location of maximum on span	8.784ft	Location of maximum on span	0.000 ft
Span # where maximum occurs	Span # 1	Span # where maximum occurs	Span # 1

Maximum Deflection

Max Downward Transient Deflection	0.421 in	Ratio =	612 >=360
Max Upward Transient Deflection	0.000 in	Ratio =	0 <360
Max Downward Total Deflection	0.664 in	Ratio =	388 >=240
Max Upward Total Deflection	0.000 in	Ratio =	0 <240

Maximum Forces & Stresses for Load Combinations

Load Combination		Max Stress Ratios		Summary of Moment Values							Summary of Shear Values		
Segment Length	Span #	M	V	max Mu +	max Mu -	Mu Max	Mnx	Phi*Mnx	Cb	Rm	VuMax	Vnx	Phi*Vnx
+1.40D+1.60H													
Dsgn. L = 21.50 ft	1	0.186	0.067	23.21		23.21	138.33	124.50	1.00	1.00	6.35	94.53	94.53
+1.20D+0.50Lr+1.60L+1.60H													
Dsgn. L = 21.50 ft	1	0.529	0.197	65.92		65.92	138.33	124.50	1.00	1.00	18.63	94.53	94.53
+1.20D+1.60L+0.50S+1.60H													
Dsgn. L = 21.50 ft	1	0.529	0.197	65.92		65.92	138.33	124.50	1.00	1.00	18.63	94.53	94.53
+1.20D+1.60Lr+L+1.60H													
Dsgn. L = 21.50 ft	1	0.391	0.145	48.66		48.66	138.33	124.50	1.00	1.00	13.68	94.53	94.53
+1.20D+1.60Lr+0.50W+1.60H													
Dsgn. L = 21.50 ft	1	0.160	0.058	19.89		19.89	138.33	124.50	1.00	1.00	5.45	94.53	94.53
+1.20D+L+1.60S+1.60H													
Dsgn. L = 21.50 ft	1	0.391	0.145	48.66		48.66	138.33	124.50	1.00	1.00	13.68	94.53	94.53
+1.20D+1.60S+0.50W+1.60H													
Dsgn. L = 21.50 ft	1	0.160	0.058	19.89		19.89	138.33	124.50	1.00	1.00	5.45	94.53	94.53
+1.20D+0.50Lr+L+W+1.60H													

Project Title:
Engineer:
Project ID:
Project Descr:

Steel Beam

File = C:\Users\mackaic\DOCUME~1\Projects\FAA\FAAWAR~1\CALCS\Beam Calc.ec6 .
Software copyright ENERCALC, INC. 1983-2018, Build:10.18.12.22 .

Lic. # : KW-06009587 **Licensee : JACOBS ENGINEERING**

Description : Walkway Beams

Load Combination		Max Stress Ratios		Summary of Moment Values							Summary of Shear Values		
Segment Length	Span #	M	V	max Mu +	max Mu -	Mu Max	Mnx	Phi*Mnx	Cb	Rm	VuMax	Vnx	Phi*Vnx
Dsgn. L = 21.50 ft	1	0.391	0.145	48.66		48.66	138.33	124.50	1.00	1.00	13.68	94.53	94.53
+1.20D+L+0.50S+W+1.60H													
Dsgn. L = 21.50 ft	1	0.391	0.145	48.66		48.66	138.33	124.50	1.00	1.00	13.68	94.53	94.53
+0.90D+W+1.60H													
Dsgn. L = 21.50 ft	1	0.120	0.043	14.92		14.92	138.33	124.50	1.00	1.00	4.08	94.53	94.53
+1.20D+L+0.20S+E+1.90H													
Dsgn. L = 21.50 ft	1	0.391	0.145	48.66		48.66	138.33	124.50	1.00	1.00	13.68	94.53	94.53
+0.90D+E+0.90H													
Dsgn. L = 21.50 ft	1	0.120	0.043	14.92		14.92	138.33	124.50	1.00	1.00	4.08	94.53	94.53

Overall Maximum Deflections

Load Combination	Span	Max. "-" Defl	Location in Span	Load Combination	Max. "+" Defl	Location in Span
+D+L+H	1	0.6644	10.381		0.0000	0.000

Vertical Reactions

Support notation : Far left is #1 Values in KIPS

Load Combination	Support 1	Support 2
Overall MAXimum	12.776	7.152
Overall MINimum	2.723	1.599
+D+H	4.539	2.664
+D+L+H	12.776	7.152
+D+Lr+H	4.539	2.664
+D+S+H	4.539	2.664
+D+0.750Lr+0.750L+H	10.716	6.030
+D+0.750L+0.750S+H	10.716	6.030
+D+0.60W+H	4.539	2.664
+D+0.750Lr+0.450W+H	4.539	2.664
+D+0.750S+0.450W+H	4.539	2.664
+0.60D+0.60W+0.60H	2.723	1.599
+D+0.70E+0.60H	4.539	2.664
+D+0.750L+0.750S+0.5250E+H	10.716	6.030
+0.60D+0.70E+H	2.723	1.599
D Only	4.539	2.664
Lr Only		
L Only	8.237	4.488
S Only		
W Only		
E Only		
H Only		

Project Title:
Engineer:
Project ID:
Project Descr:

General Section Property Calculator

File = C:\Users\mackaic\DOCUME~1\Projects\FAA\FAAWAR~1\CALCS\Beam Calc.ec6 .
Software copyright ENERCALC, INC. 1983-2018, Build:10.18.12.22 .

Lic. # : KW-06009587 Licensee : JACOBS ENGINEERING

Description : Walkway Girder #1 With 7"x3/8" Plate

Final Section Properties

Total Area	:	12.780 in^2	Ixx	:	669.15 in^4	Sxx : - Y	:	91.178 in^3
			Iyy	:	26.055 in^4	Sxx : +Y	:	62.546 in^3
Calculated final C.G. distance from Datum :						Syy : - X	:	7.444 in^3
X cg Dist.	:	0.0 in	Zxx	:	83.228 in^3	Syy : +X	:	7.444 in^3
Y cg Dist.	:	-1.849 in	Zyy	:	12.623 in^3			
Edge Distances from CG. :						r xx	:	7.236 in
+X	:	3.50 in	+Y	:	10.699 in	r yy	:	1.428 in
-X	:	-3.50 in	-Y	:	in			

Rotation of All Components @ Angle : 0.00 deg CCW

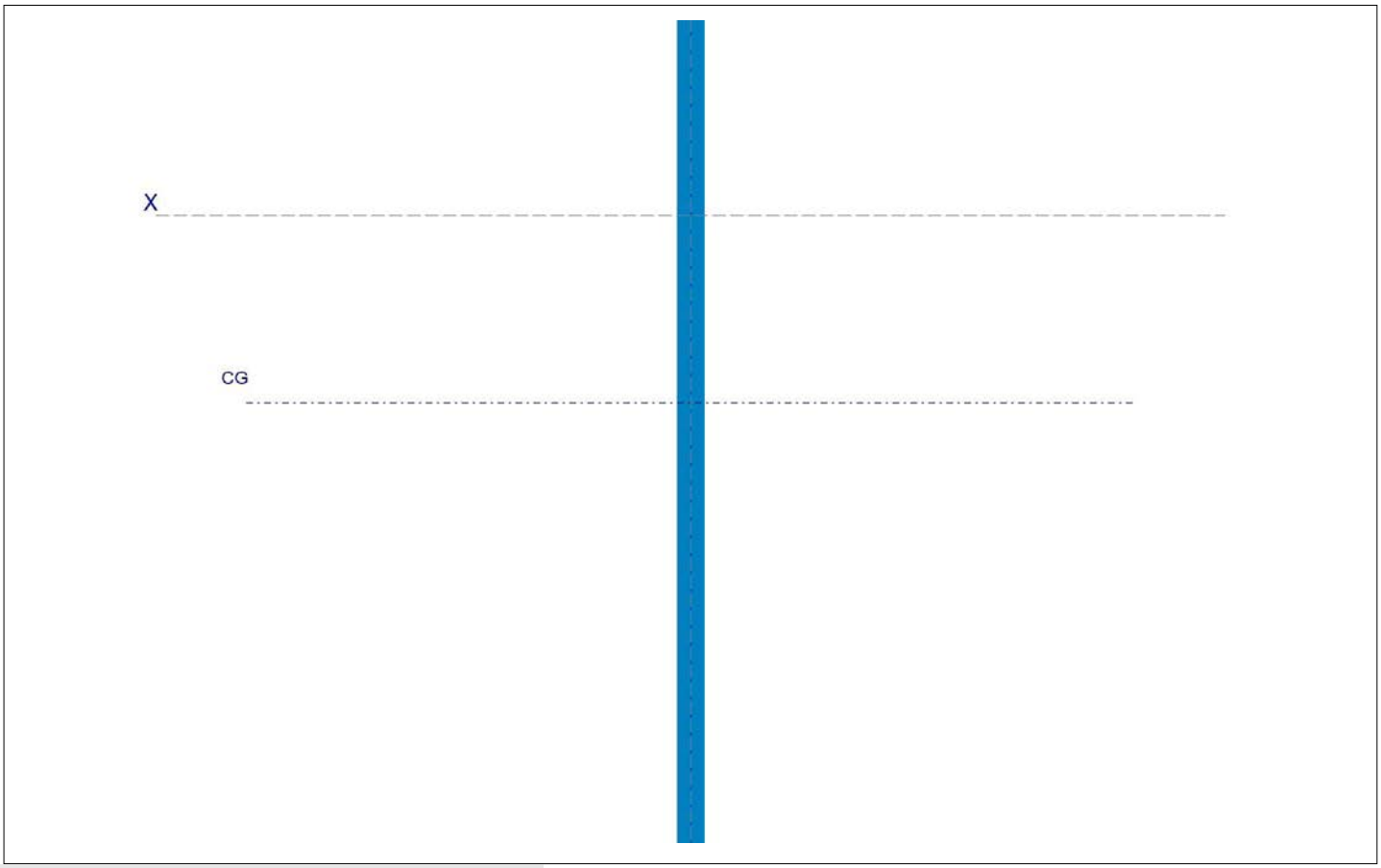

Rectangular & Circular Shapes

Rectangular Shape : 1	Height =	0.375 in	Width =	7.000 in	Rotation =	0 deg CCW
	Area =	2.625 in^2	Xcg =	0.000 in		
			Ycg =	-9.000 in		

Steel Shapes

Project Title:
Engineer:
Project ID:
Project Descr:

General Section Property Calculator

File = C:\Users\mackaic\DOCUME~1\Projects\FAA\FAAWAR~1\CALCS\Beam Calc.ec6 .
Software copyright ENERCALC, INC. 1983-2018, Build:10.18.12.22 .

Lic. # : KW-06009587 **Licensee : JACOBS ENGINEERING**

Description : Walkway Girder #1 With 7"x3/8" Plate

W18x35 : 1

Area =	10.155 in^2	Rotation =	0 deg CCW
		Xcg =	0.000 in
		Ycg =	0.000 in

Project Title:
Engineer:
Project ID:
Project Descr:

Composite Steel Beam

File = C:\Users\mackaic\DOCUME~1\Projects\FAA\FAAWAR~1\CALCS\Beam Calc.ec6 .
Software copyright ENERCALC, INC. 1983-2018, Build:10.18.12.22 .

Lic. # : KW-06009587 Licensee : JACOBS ENGINEERING

Description : Existing Composite Girder With Plate (Girder #1- Near Stair)

CODE REFERENCES

Calculations per AISC 360-10, IBC 2012, CBC 2013, ASCE 7-10
Load Combination Set : ASCE 7-16

Material Properties

Analysis Method : Load Resistance Factor Design
Beam Bracing : Beam is Fully Braced against lateral-torsional buckling by attached
Load Combination ASCE 7-16
Fy : Steel Yield : 50.0 ksi E: Modulus : 29,000.0 ksi

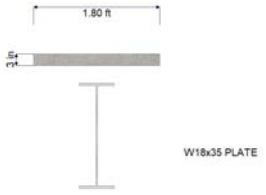

Composite Beam Section Data

Beam is UNSHORED for Concrete Placement

Total Slab Thickness	5.0 in	Concrete f'c	4.0 ksi	Stud Diameter	3/4" in
Effective Width	1.80 ft	Concrete Density	145.0 pcf	Qn : Stud Capacity	17.240 k
Metal Deck . . .		Rib Height	3.0 in	Top Width	7.250 in
Ribs :	Perpendicular	Rib Spacing	12.0 in	Btm Width	4.750 in

Applied Loads

Service loads entered. Load Factors will be applied for calculatior

Beam self weight calculated and added to loads
Load for Span Number 1
Uniform Load : D = 0.0540, L = 0.10 ksf, Tributary Width = 1.80 ft, Post Composite Only
Point Load : D = 4.540, L = 8.237 k @ 14.50 ft, Post Composite Only
Point Load : D = 4.540, L = 8.237 k @ 20.50 ft, Post Composite Only
Uniform Load : D = 0.030, L = 0.050 k/ft, Extent = 0.0 -->> 14.50 ft, Tributary Width = 1.0 ft, Post Composite Only
Uniform Load : D = 0.030, L = 0.050 k/ft, Extent = 20.50 -->> 35.0 ft, Tributary Width = 1.0 ft, Post Composite Only

DESIGN SUMMARY

Design OK

MAX Bending Ratio = **0.964** : 1
Steel section **W18x35 PLATE**

Composite

% Composite Action	**70**	%
Mu : Applied	350.692	k-ft
Mn * Phi : Allow	363.870	k-ft
Location of maximum	17.50	ft

Load Combination
+1.20D+0.50Lr+1.60L+1.60H

Pre-Composite

Mu : Applied	7.516	k-ft
Mn * Phi : Allowable	312.105	k-ft

MAX Shear Ratio = **0.174** : 1

Vu : Applied	28.127	k
Vn * Phi : Allow	161.550	k
Location of maximum	0.0	ft

Load Combination
+1.20D+0.50Lr+1.60L+1.60H

DEFLECTIONS

FINAL Composite

Max Downward	1.806	in
Max Upward	0.000	in
Defl Ratio	232	

+D+L+H

Transient Composite

Max Downward	1.125	in
Max Upward	0.000	in
Defl Ratio	373	

L Only

NonComposite

Max Downward	0.062	in
Max Upward	0.000	in
Defl Ratio	6812	

PreCompDL+PreCompLL

Shear Stud Requirements

From Support 1 to 17.50 ft use 6 studs.
From 17.50 ft to Support 2 use 6 studs.

Maximum Forces & Stresses for Load Combinations

Project Title:
Engineer:
Project ID:
Project Descr:

Composite Steel Beam

File = C:\Users\mackaic\DOCUME~1\Projects\FAA\FAAWAR~1\CALCS\Beam Calc.ec6 .
Software copyright ENERCALC, INC. 1983-2018, Build:10.18.12.22 .

Lic. # : KW-06009587 **Licensee : JACOBS ENGINEERING**

Description : Existing Composite Girder With Plate (Girder #1- Near Stair)

Load Comb & Design Length	Span #	Max Stress Ratios M	Max Stress Ratios V	Bending Summary Mu-Applied	Bending Summary MnTr * Phi	Shear Summary Va	Shear Summary Vn * Phi
Pre Composite : D + Const L							
Span L = 35 ft	1	0.024	0.005	7.52	312.11	0.86	161.55
Final Composite : +1.40D+1.60H							
Span L = 35 ft	1	0.343	0.063	124.93	363.87	10.21	161.55
Final Composite : +1.20D+0.50Lr+1.6							
Span L = 35 ft	1	0.964	0.174	350.69	363.87	28.13	161.55
Final Composite : +1.20D+1.60L+0.50							
Span L = 35 ft	1	0.964	0.174	350.69	363.87	28.13	161.55
Final Composite : +1.20D+1.60Lr+L+1							
Span L = 35 ft	1	0.713	0.129	259.34	363.87	20.86	161.55
Final Composite : +1.20D+1.60Lr+0.5							
Span L = 35 ft	1	0.294	0.054	107.08	363.87	8.75	161.55
Final Composite : +1.20D+L+1.60S+1.							
Span L = 35 ft	1	0.713	0.129	259.34	363.87	20.86	161.55
Final Composite : +1.20D+1.60S+0.50							
Span L = 35 ft	1	0.294	0.054	107.08	363.87	8.75	161.55
Final Composite : +1.20D+0.50Lr+L+W							
Span L = 35 ft	1	0.713	0.129	259.34	363.87	20.86	161.55
Final Composite : +1.20D+L+0.50S+W+							
Span L = 35 ft	1	0.713	0.129	259.34	363.87	20.86	161.55
Final Composite : +0.90D+W+1.60H							
Span L = 35 ft	1	0.221	0.041	80.31	363.87	6.56	161.55
Final Composite : +1.20D+L+0.20S+E+							
Span L = 35 ft	1	0.713	0.129	259.34	363.87	20.86	161.55
Final Composite : +0.90D+E+0.90H							
Span L = 35 ft	1	0.221	0.041	80.31	363.87	6.56	161.55

Maximum Deflections for Load Combinations - Unfactored Loads

Load Combination		Location in Span (ft)	FINAL	DEFLECTIONS (in) Pre-Composite	NonComposite Removed	Added Post Composite	Ixx - Used in^4
Precomposite	Downward	17.733	**0.000**	0.0617			669.15
Precomposite	Upward	0.000	**0.000**				669.15
NonComposite Removed	Downward	17.733	**0.000**	0.0617			0.00
NonComposite Removed	Upward	0.000	**0.000**				0.00
Final Composite : +D+H	Downward	17.733	**0.620**	0.0617		0.062	981.30
Final Composite : +D+H	Upward	0.000	**0.000**				981.30
Final Composite : +D+L+H	Downward	17.733	**1.744**	0.0617		0.062	981.30
Final Composite : +D+L+H	Upward	0.000	**0.000**				981.30
Final Composite : +D+Lr+H	Downward	17.733	**0.620**	0.0617		0.062	981.30
Final Composite : +D+Lr+H	Upward	0.000	**0.000**				981.30
Final Composite : +D+S+H	Downward	17.733	**0.620**	0.0617		0.062	981.30
Final Composite : +D+S+H	Upward	0.000	**0.000**				981.30
Final Composite : +D+0.750Lr+0.750	Downward	17.733	**1.463**	0.0617		0.062	981.30
Final Composite : +D+0.750Lr+0.750	Upward	0.000	**0.000**				981.30
Final Composite : +D+0.750L+0.750S	Downward	17.733	**1.463**	0.0617		0.062	981.30
Final Composite : +D+0.750L+0.750S	Upward	0.000	**0.000**				981.30
Final Composite : +D+0.60W+H	Downward	17.733	**0.620**	0.0617		0.062	981.30
Final Composite : +D+0.60W+H	Upward	0.000	**0.000**				981.30
Final Composite : +D+0.750Lr+0.450	Downward	17.733	**0.620**	0.0617		0.062	981.30
Final Composite : +D+0.750Lr+0.450	Upward	0.000	**0.000**				981.30
Final Composite : +D+0.750S+0.450W	Downward	17.733	**0.620**	0.0617		0.062	981.30
Final Composite : +D+0.750S+0.450W	Upward	0.000	**0.000**				981.30
Final Composite : +0.60D+0.60W+0.6	Downward	17.733	**0.372**	0.0370		0.037	981.30
Final Composite : +0.60D+0.60W+0.6	Upward	0.000	**0.000**				981.30
Final Composite : +D+0.70E+0.60H	Downward	17.733	**0.620**	0.0617		0.062	981.30
Final Composite : +D+0.70E+0.60H	Upward	0.000	**0.000**				981.30
Final Composite : +D+0.750L+0.750S	Downward	17.733	**1.463**	0.0617		0.062	981.30
Final Composite : +D+0.750L+0.750S	Upward	0.000	**0.000**				981.30
Final Composite : +0.60D+0.70E+H	Downward	17.733	**0.372**	0.0370		0.037	981.30
Final Composite : +0.60D+0.70E+H	Upward	0.000	**0.000**				981.30
Final Composite : D Only	Downward	17.733	**0.620**	0.0617		0.062	981.30
Final Composite : D Only	Upward	0.000	**0.000**				981.30
Final Composite : Lr Only	Downward	35.000	**0.000**				981.30
Final Composite : Lr Only	Upward	35.000	**0.000**				981.30
Final Composite : L Only	Downward	17.733	**1.125**				981.30
Final Composite : L Only	Upward	0.000	**0.000**				981.30
Final Composite : S Only	Downward	35.000	**0.000**				981.30
Final Composite : S Only	Upward	35.000	**0.000**				981.30
Final Composite : W Only	Downward	35.000	**0.000**				981.30

Project Title:
Engineer:
Project ID:
Project Descr:

Composite Steel Beam

File = C:\Users\mackaic\DOCUME~1\Projects\FAA\FAAWAR~1\CALCS\Beam Calc.ec6 .
Software copyright ENERCALC, INC. 1983-2018, Build:10.18.12.22 .

Lic. # : KW-06009587 Licensee : JACOBS ENGINEERING

Description : Existing Composite Girder With Plate (Girder #1- Near Stair)

Maximum Deflections for Load Combinations - Unfactored Loads

Load Combination		Location in Span (ft)	FINAL	DEFLECTIONS (in) Pre-Composite	NonComposite Removed	Added Post Composite	Ixx - Used in^4
Final Composite : W Only	Upward	35.000	**0.000**				981.30
Final Composite : E Only	Downward	35.000	**0.000**				981.30
Final Composite : E Only	Upward	35.000	**0.000**				981.30
Final Composite : H Only	Downward	35.000	**0.000**				981.30
Final Composite : H Only	Upward	35.000	**0.000**				981.30

Maximum Vertical Reactions - Unfactored

Support notation : Far left is #1

Load Combination	Support 1	Support 2
Overall MAXimum	19.402	19.402
Precomposite Loads	0.614	0.614
NonComposite Removed	0.614	0.614
Final Composite : +D+H	7.290	7.290
Final Composite : +D+L+H	19.402	19.402
Final Composite : +D+Lr+H	7.290	7.290
Final Composite : +D+S+H	7.290	7.290
Final Composite : +D+0.750Lr+0.750	16.374	16.374
Final Composite : +D+0.750L+0.750S	16.374	16.374
Final Composite : +D+0.60W+H	7.290	7.290
Final Composite : +D+0.750Lr+0.450	7.290	7.290
Final Composite : +D+0.750S+0.450W	7.290	7.290
Final Composite : +0.60D+0.60W+0.6	4.374	4.374
Final Composite : +D+0.70E+0.60H	7.290	7.290
Final Composite : +D+0.750L+0.750S	16.374	16.374
Final Composite : +0.60D+0.70E+H	4.374	4.374
Final Composite : D Only	7.290	7.290
Final Composite : Lr Only		
Final Composite : L Only	12.112	12.112
Final Composite : S Only		
Final Composite : W Only		
Final Composite : E Only		
Final Composite : H Only		

Steel Section Properties : W18x35 PLATE

Depth	=	17.950	in	I xx	=	669.15	in^4	I yy	= 26.055 in^4
Web Thick	=	0.300	in	S xx	=	62.55	in^3	S yy	= 7.444 in^3
Flange Width	=	6.000	in	R xx	=	7.236	in	R yy	= 1.428 in
Flange Thick	=	0.425	in	Zx	=	83.228	in^3	Zy	= 12.623 in^3
Area	=	12.780	in^2					J	= 0.506 in^4
Weight	=	35.061	plf						

Composite Section Properties

Span Number / Plastic N. A. Location	Analysis Type	% Shear Connection	Plastic N.A. from Bottom	Sum Qn Shear (k)	# Studs per 1/2 Span	Mn - Capacity k-ft	Moment of Inertia I-Steel	I-Trans	I-Lwr Bound
Span 1									
PNA in Web		100.0	9.621	146.880	9	439.94	669.2	1,324.8	1,071.3
PNA in Web		95.0	9.376	139.536	9	434.38	669.2	1,324.8	1,057.7
PNA in Web		90.0	9.131	132.192	8	428.66	669.2	1,324.8	1,043.7
PNA in Web		85.0	8.887	124.848	8	422.80	669.2	1,324.8	1,029.0
PNA in Web		80.0	8.642	117.504	7	416.78	669.2	1,324.8	1,013.7
PNA in Web		75.0	8.397	110.160	7	410.61	669.2	1,324.8	997.8
PNA in Web		70.0	8.152	102.816	6	404.30	669.2	1,324.8	981.3
PNA in Web		65.0	7.907	95.472	6	397.84	669.2	1,324.8	964.1
PNA in Web		60.0	7.663	88.128	6	391.22	669.2	1,324.8	946.2
PNA in Web		55.0	7.418	80.784	5	384.46	669.2	1,324.8	927.7
PNA in Web		50.0	7.173	73.440	5	377.54	669.2	1,324.8	908.4
PNA in Web		45.0	6.928	66.096	4	370.48	669.2	1,324.8	888.3
PNA in Web		40.0	6.683	58.752	4	363.26	669.2	1,324.8	867.5
PNA in Web		35.0	6.439	51.408	3	355.90	669.2	1,324.8	845.8
PNA in Web		30.0	6.194	44.064	3	348.39	669.2	1,324.8	823.3
PNA in Web		25.0	5.949	36.720	3	340.72	669.2	1,324.8	800.0

Project Title:
Engineer:
Project ID:
Project Descr:

Composite Steel Beam

File = C:\Users\mackaic\DOCUME~1\Projects\FAA\FAAWAR~1\CALCS\Beam Calc.ec6 .
Software copyright ENERCALC, INC. 1983-2018, Build:10.18.12.22 .

Lic. # : KW-06009587 **Licensee : JACOBS ENGINEERING**

Description : Existing Composite Girder (Girder #2 - Away from Stair)

CODE REFERENCES

Calculations per AISC 360-10, IBC 2012, CBC 2013, ASCE 7-10
Load Combination Set : ASCE 7-16

Material Properties

Analysis Method : Load Resistance Factor Design
Beam Bracing : Beam is Fully Braced against lateral-torsional buckling by attached sl
Load Combination ASCE 7-16
Fy : Steel Yield : 50.0 ksi E: Modulus : 29,000.0 ksi

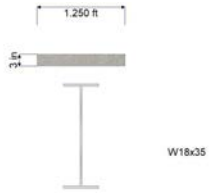

Composite Beam Section Data

Beam is UNSHORED for Concrete Placement

Total Slab Thickness	5.0 in	Concrete f'c	4.0 ksi	Stud Diameter	3/4" in
Effective Width	1.250 ft	Concrete Density	145.0 pcf	Qn : Stud Capacity	17.240 k
Metal Deck . . .		Rib Height	3.0 in	Top Width	7.250 in
Ribs :	Perpendicular	Rib Spacing	12.0 in	Btm Width	4.750 in

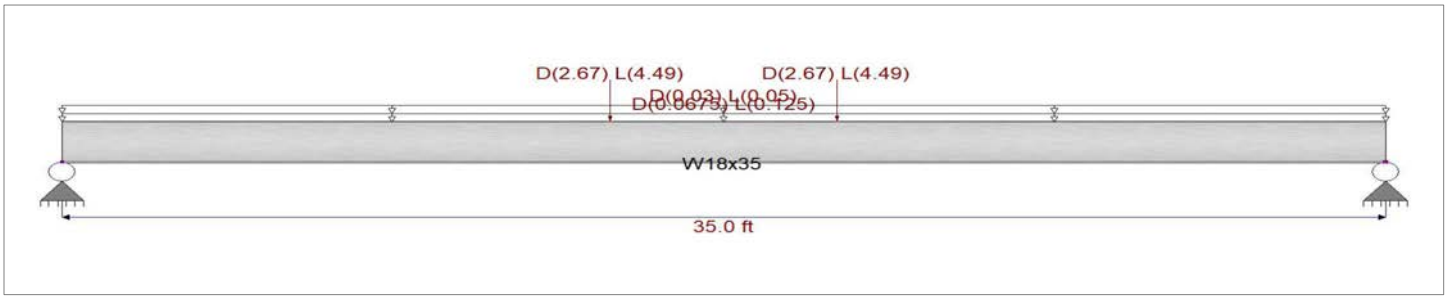

Applied Loads

Service loads entered. Load Factors will be applied for calculations.

Beam self weight calculated and added to loads
Load for Span Number 1
Uniform Load : D = 0.0540, L = 0.10 ksf, Tributary Width = 1.250 ft, Post Composite Only
Point Load : D = 2.670, L = 4.490 k @ 14.50 ft, Post Composite Only
Point Load : D = 2.670, L = 4.490 k @ 20.50 ft, Post Composite Only
Uniform Load : D = 0.030, L = 0.050 k/ft, Tributary Width = 1.0 ft, Post Composite Only

DESIGN SUMMARY

Design OK

MAX Bending Ratio = **0.805** : 1
Steel section **W18x35**

Composite

% Composite Action **25** %
Mu : Applied 217.859 k-ft
Mn * Phi : Allow 270.582 k-ft
Location of maximum 17.50 ft
Load Combination
+1.20D+0.50Lr+1.60L+1.60H

Pre-Composite

Mu : Applied 7.516 k-ft
Mn * Phi : Allowable 249.375 k-ft

MAX Shear Ratio = **0.113** : 1
Vu : Applied 18.072 k
Vn * Phi : Allow 159.30 k
Location of maximum 0.0 ft
Load Combination
+1.20D+0.50Lr+1.60L+1.60H

DEFLECTIONS

FINAL Composite
Max Downward 1.845 in
Max Upward 0.000 in
Defl Ratio 227
+D+L+H

Transient Composite
Max Downward 1.115 in
Max Upward 0.000 in
Defl Ratio 376
L Only

NonComposite
Max Downward 0.081 in
Max Upward 0.000 in
Defl Ratio 5191
PreCompDL+PreCompLL

Shear Stud Requirements

From Support 1 to 17.50 ft use 6 studs. (Code Max Spacing of 36 in governs)
From 17.50 ft to Support 2 use 6 studs. (Code Max Spacing of 36 in governs)

Maximum Forces & Stresses for Load Combinations

Project Title:
Engineer:
Project ID:
Project Descr:

Composite Steel Beam

File = C:\Users\mackaic\DOCUME~1\Projects\FAA\FAAWAR~1\CALCS\Beam Calc.ec6 .
Software copyright ENERCALC, INC. 1983-2018, Build:10.18.12.22 .

Lic. # : KW-06009587 **Licensee : JACOBS ENGINEERING**

Description : Existing Composite Girder (Girder #2 - Away from Stair)

Load Comb & Design Length	Span #	Max Stress Ratios M	Max Stress Ratios V	Bending Summary Mu-Applied	Bending Summary MnTr * Phi	Shear Summary Va	Shear Summary Vn * Phi
Pre Composite : D + Const L							
Span L = 35 ft	1	0.030	0.005	7.52	249.38	0.86	159.30
Final Composite : +1.40D+1.60H							
Span L = 35 ft	1	0.305	0.044	82.62	270.58	6.99	159.30
Final Composite : +1.20D+0.50Lr+1.6							
Span L = 35 ft	1	0.805	0.113	217.86	270.58	18.07	159.30
Final Composite : +1.20D+1.60L+0.50							
Span L = 35 ft	1	0.805	0.113	217.86	270.58	18.07	159.30
Final Composite : +1.20D+1.60Lr+L+1							
Span L = 35 ft	1	0.601	0.085	162.72	270.58	13.54	159.30
Final Composite : +1.20D+1.60Lr+0.5							
Span L = 35 ft	1	0.262	0.038	70.82	270.58	5.99	159.30
Final Composite : +1.20D+L+1.60S+1.							
Span L = 35 ft	1	0.601	0.085	162.72	270.58	13.54	159.30
Final Composite : +1.20D+1.60S+0.50							
Span L = 35 ft	1	0.262	0.038	70.82	270.58	5.99	159.30
Final Composite : +1.20D+0.50Lr+L+W							
Span L = 35 ft	1	0.601	0.085	162.72	270.58	13.54	159.30
Final Composite : +1.20D+L+0.50S+W+							
Span L = 35 ft	1	0.601	0.085	162.72	270.58	13.54	159.30
Final Composite : +0.90D+W+1.60H							
Span L = 35 ft	1	0.196	0.028	53.11	270.58	4.49	159.30
Final Composite : +1.20D+L+0.20S+E+							
Span L = 35 ft	1	0.601	0.085	162.72	270.58	13.54	159.30
Final Composite : +0.90D+E+0.90H							
Span L = 35 ft	1	0.196	0.028	53.11	270.58	4.49	159.30

Maximum Deflections for Load Combinations - Unfactored Loads

Load Combination		Location in Span (ft)	FINAL	DEFLECTIONS (in) Pre-Composite	DEFLECTIONS (in) NonComposite Removed	Added Post Composite	Ixx - Used in^4
Precomposite	Downward	17.733	**0.000**	0.0809			510.00
Precomposite	Upward	0.000	**0.000**				510.00
NonComposite Removed	Downward	17.733	**0.000**	0.0809			0.00
NonComposite Removed	Upward	0.000	**0.000**				0.00
Final Composite : +D+H	Downward	17.733	**0.650**	0.0809		0.081	599.88
Final Composite : +D+H	Upward	0.000	**0.000**				599.88
Final Composite : +D+L+H	Downward	17.733	**1.765**	0.0809		0.081	599.88
Final Composite : +D+L+H	Upward	0.000	**0.000**				599.88
Final Composite : +D+Lr+H	Downward	17.733	**0.650**	0.0809		0.081	599.88
Final Composite : +D+Lr+H	Upward	0.000	**0.000**				599.88
Final Composite : +D+S+H	Downward	17.733	**0.650**	0.0809		0.081	599.88
Final Composite : +D+S+H	Upward	0.000	**0.000**				599.88
Final Composite : +D+0.750Lr+0.750	Downward	17.733	**1.486**	0.0809		0.081	599.88
Final Composite : +D+0.750Lr+0.750	Upward	0.000	**0.000**				599.88
Final Composite : +D+0.750L+0.750S	Downward	17.733	**1.486**	0.0809		0.081	599.88
Final Composite : +D+0.750L+0.750S	Upward	0.000	**0.000**				599.88
Final Composite : +D+0.60W+H	Downward	17.733	**0.650**	0.0809		0.081	599.88
Final Composite : +D+0.60W+H	Upward	0.000	**0.000**				599.88
Final Composite : +D+0.750Lr+0.450	Downward	17.733	**0.650**	0.0809		0.081	599.88
Final Composite : +D+0.750Lr+0.450	Upward	0.000	**0.000**				599.88
Final Composite : +D+0.750S+0.450W	Downward	17.733	**0.650**	0.0809		0.081	599.88
Final Composite : +D+0.750S+0.450W	Upward	0.000	**0.000**				599.88
Final Composite : +0.60D+0.60W+0.6	Downward	17.733	**0.390**	0.0485		0.049	599.88
Final Composite : +0.60D+0.60W+0.6	Upward	0.000	**0.000**				599.88
Final Composite : +D+0.70E+0.60H	Downward	17.733	**0.650**	0.0809		0.081	599.88
Final Composite : +D+0.70E+0.60H	Upward	0.000	**0.000**				599.88
Final Composite : +D+0.750L+0.750S	Downward	17.733	**1.486**	0.0809		0.081	599.88
Final Composite : +D+0.750L+0.750S	Upward	0.000	**0.000**				599.88
Final Composite : +0.60D+0.70E+H	Downward	17.733	**0.390**	0.0485		0.049	599.88
Final Composite : +0.60D+0.70E+H	Upward	0.000	**0.000**				599.88
Final Composite : D Only	Downward	17.733	**0.650**	0.0809		0.081	599.88
Final Composite : D Only	Upward	0.000	**0.000**				599.88
Final Composite : Lr Only	Downward	35.000	**0.000**				599.88
Final Composite : Lr Only	Upward	35.000	**0.000**				599.88
Final Composite : L Only	Downward	17.733	**1.115**				599.88
Final Composite : L Only	Upward	0.000	**0.000**				599.88
Final Composite : S Only	Downward	35.000	**0.000**				599.88
Final Composite : S Only	Upward	35.000	**0.000**				599.88
Final Composite : W Only	Downward	35.000	**0.000**				599.88
Final Composite : W Only	Upward	35.000	**0.000**				599.88

Project Title:
Engineer:
Project ID:
Project Descr:

Composite Steel Beam

File = C:\Users\mackaic\DOCUME~1\Projects\FAA\FAAWAR~1\CALCS\Beam Calc.ec6 .
Software copyright ENERCALC, INC. 1983-2018, Build:10.18.12.22 .

Lic. # : KW-06009587 Licensee : JACOBS ENGINEERING

Description : Existing Composite Girder (Girder #2 - Away from Stair)

Maximum Deflections for Load Combinations - Unfactored Loads

Load Combination		Location in Span (ft)	FINAL	DEFLECTIONS (in) Pre-Composite	NonComposite Removed	Added Post Composite	Ixx - Used in^4
Final Composite : E Only	Downward	35.000	**0.000**				599.88
Final Composite : E Only	Upward	35.000	**0.000**				599.88
Final Composite : H Only	Downward	35.000	**0.000**				599.88
Final Composite : H Only	Upward	35.000	**0.000**				599.88

Maximum Vertical Reactions - Unfactored

Support notation : Far left is #1

Load Combination	Support 1	Support 2
Overall MAXimum	12.542	12.542
Precomposite Loads	0.614	0.614
NonComposite Removed	0.614	0.614
Final Composite : +D+H	4.990	4.990
Final Composite : +D+L+H	12.542	12.542
Final Composite : +D+Lr+H	4.990	4.990
Final Composite : +D+S+H	4.990	4.990
Final Composite : +D+0.750Lr+0.750	10.654	10.654
Final Composite : +D+0.750L+0.750S	10.654	10.654
Final Composite : +D+0.60W+H	4.990	4.990
Final Composite : +D+0.750Lr+0.450	4.990	4.990
Final Composite : +D+0.750S+0.450W	4.990	4.990
Final Composite : +0.60D+0.60W+0.6	2.994	2.994
Final Composite : +D+0.70E+0.60H	4.990	4.990
Final Composite : +D+0.750L+0.750S	10.654	10.654
Final Composite : +0.60D+0.70E+H	2.994	2.994
Final Composite : D Only	4.990	4.990
Final Composite : Lr Only		
Final Composite : L Only	7.553	7.553
Final Composite : S Only		
Final Composite : W Only		
Final Composite : E Only		
Final Composite : H Only		

Steel Section Properties : W18x35

Depth	=	17.700	in	I xx	=	510.00	in^4	I yy	=	15.300	in^4
Web Thick	=	0.300	in	S xx	=	57.60	in^3	S yy	=	5.120	in^3
Flange Width	=	6.000	in	R xx	=	7.040	in	R yy	=	1.220	in
Flange Thick	=	0.425	in	Zx	=	66.500	in^3	Zy	=	8.060	in^3
Area	=	10.300	in^2					J	=	0.506	in^4
Weight	=	35.061	plf								

Composite Section Properties

Span Number / Plastic N. A. Location	Analysis Type	% Shear Connection	Plastic N.A. from Bottom	Sum Qn Shear (k)	# Studs per 1/2 Span	Mn - Capacity k-ft	Moment of Inertia I-Steel	I-Trans	I-Lwr Bound
Span 1									
PNA in Web		100.0	12.008	102.000	6	374.71	510.0	967.0	791.2
PNA in Web		95.0	11.838	96.900	6	370.28	510.0	967.0	781.4
PNA in Web		90.0	11.668	91.800	6	365.78	510.0	967.0	771.3
PNA in Web		85.0	11.498	86.700	6	361.20	510.0	967.0	760.8
PNA in Web		80.0	11.328	81.600	5	356.55	510.0	967.0	749.9
PNA in Web		75.0	11.158	76.500	5	351.83	510.0	967.0	738.6
PNA in Web		70.0	10.988	71.400	5	347.04	510.0	967.0	726.9
PNA in Web		65.0	10.818	66.300	4	342.17	510.0	967.0	714.7
PNA in Web		60.0	10.648	61.200	4	337.23	510.0	967.0	702.1
PNA in Web		55.0	10.478	56.100	4	332.22	510.0	967.0	689.0
PNA in Web		50.0	10.308	51.000	3	327.14	510.0	967.0	675.4
PNA in Web		45.0	10.138	45.900	3	321.99	510.0	967.0	661.3
PNA in Web		40.0	9.968	40.800	3	316.76	510.0	967.0	646.8
PNA in Web		35.0	9.798	35.700	3	311.46	510.0	967.0	631.7
PNA in Web		30.0	9.628	30.600	2	306.09	510.0	967.0	616.1
PNA in Web		25.0	9.458	25.500	2	300.65	510.0	967.0	599.9

Project Title:
Engineer:
Project ID:
Project Descr:

Composite Steel Beam

File = C:\Users\mackaic\DOCUME~1\Projects\FAA\FAAWAR~1\CALCS\Beam Calc.ec6 .
Software copyright ENERCALC, INC. 1983-2018, Build:10.18.12.22 .

Lic. # : KW-06009587 Licensee : JACOBS ENGINEERING

Description : Girder #3 Composite Check

CODE REFERENCES

Calculations per AISC 360-10, IBC 2012, CBC 2013, ASCE 7-10
Load Combination Set : ASCE 7-16

Material Properties

Analysis Method : Load Resistance Factor Design
Beam Bracing : Beam is Fully Braced against lateral-torsional buckling by attached sl
Load Combination ASCE 7-16
Fy : Steel Yield : 50.0 ksi E: Modulus : 29,000.0 ksi

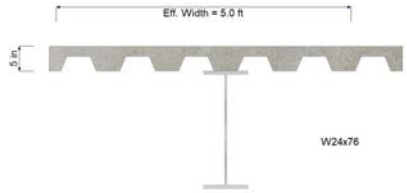

Composite Beam Section Data

Beam is UNSHORED for Concrete Placement

Total Slab Thickness	5.0 in	Concrete f'c	4.0 ksi	Stud Diameter	3/4" in
Effective Width	5.0 ft	Concrete Density	145.0 pcf	Qn : Stud Capacity	21.550 k
Metal Deck . . .		Rib Height	3.0 in	Top Width	7.250 in
Ribs :	Parallel	Rib Spacing	12.0 in	Btm Width	4.750 in

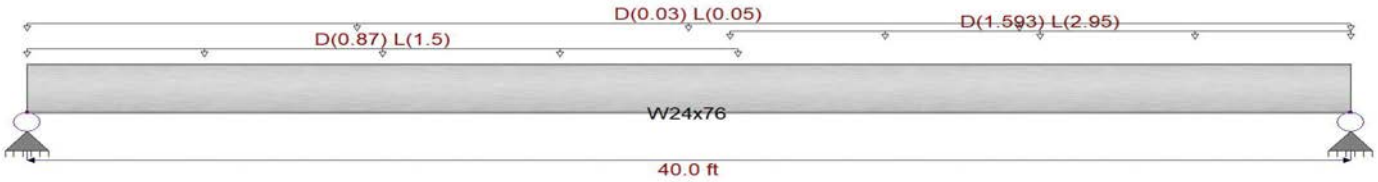

Applied Loads

Service loads entered. Load Factors will be applied for calculations.

Beam self weight calculated and added to loads
Load for Span Number 1
Uniform Load : D = 0.0580, L = 0.10 ksf, Extent = 0.0 -->> 21.50 ft, Tributary Width = 15.0 ft, Post Composite Only
Uniform Load : D = 0.0540, L = 0.10 ksf, Extent = 21.250 -->> 40.0 ft, Tributary Width = 29.50 ft, Post Composite Only
Uniform Load : D = 0.030, L = 0.050 k/ft, Tributary Width = 1.0 ft, Post Composite Only

DESIGN SUMMARY

Design OK

MAX Bending Ratio = **0.903** : 1
Steel section **W24x76**

Composite

% Composite Action **68** %
Mu : Applied 1,039.61 k-ft
Mn * Phi : Allow 1,151.52 k-ft
Location of maximum 22.667 ft
Load Combination
+1.20D+0.50Lr+1.60L+1.60H

Pre-Composite

Mu : Applied 21.350 k-ft
Mn * Phi : Allowable 750.0 k-ft

MAX Shear Ratio = **0.378** : 1
Vu : Applied 119.250 k
Vn * Phi : Allow 315.480 k
Location of maximum 40.0 ft
Load Combination
+1.20D+0.50Lr+1.60L+1.60H

DEFLECTIONS

FINAL Composite
Max Downward 1.905 in
Max Upward 0.000 in
Defl Ratio 251
+D+L+H

Transient Composite
Max Downward 1.177 in
Max Upward 0.000 in
Defl Ratio 407
L Only

NonComposite
Max Downward 0.073 in
Max Upward 0.000 in
Defl Ratio 6585
PreCompDL+PreCompLL

Shear Stud Requirements

From Support 1 to 22.67 ft use 23 studs.
From 22.67 ft to Support 2 use 23 studs.

Maximum Forces & Stresses for Load Combinations

Project Title:
Engineer:
Project ID:
Project Descr:

Composite Steel Beam

File = C:\Users\mackaic\DOCUME~1\Projects\FAA\FAAWAR~1\CALCS\Beam Calc.ec6 .
Software copyright ENERCALC, INC. 1983-2018, Build:10.18.12.22 .

Lic. # : KW-06009587 **Licensee : JACOBS ENGINEERING**

Description : Girder #3 Composite Check

Load Comb & Design Length	Span #	Max Stress Ratios M	Max Stress Ratios V	Bending Summary Mu-Applied	Bending Summary MnTr * Phi	Shear Summary Va	Shear Summary Vn * Phi
Pre Composite : D + Const L							
Span L = 40 ft	1	0.028	0.007	21.35	750.00	2.13	315.48
Final Composite : +1.20D+0.50Lr+1.6							
Span L = 40 ft	1	0.903	0.277	1,039.61	1,151.52	87.44	315.48
Final Composite : +1.20D+1.60L+0.50							
Span L = 40 ft	1	0.903	0.277	1,039.61	1,151.52	87.44	315.48

Maximum Deflections for Load Combinations - Unfactored Loads

Load Combination		Location in Span (ft)	FINAL	DEFLECTIONS (in) Pre-Composite	DEFLECTIONS (in) NonComposite Removed	Added Post Composite	Ixx - Used in^4
Precomposite	Downward	20.267	**0.000**	0.0729			2,100.00
Precomposite	Upward	0.000	**0.000**				2,100.00
NonComposite Removed	Downward	20.267	**0.000**	0.0729			0.00
NonComposite Removed	Upward	0.000	**0.000**				0.00
Final Composite : +D+H	Downward	20.533	**0.655**	0.0729		0.073	3,782.49
Final Composite : +D+H	Upward	0.000	**0.000**				3,782.49
Final Composite : +D+L+H	Downward	20.533	**1.833**	0.0729		0.073	3,782.49
Final Composite : +D+L+H	Upward	0.000	**0.000**				3,782.49
Final Composite : +D+Lr+H	Downward	20.533	**0.655**	0.0729		0.073	3,782.49
Final Composite : +D+Lr+H	Upward	0.000	**0.000**				3,782.49
Final Composite : +D+S+H	Downward	20.533	**0.655**	0.0729		0.073	3,782.49
Final Composite : +D+S+H	Upward	0.000	**0.000**				3,782.49
Final Composite : +D+0.750Lr+0.750	Downward	20.533	**1.538**	0.0729		0.073	3,782.49
Final Composite : +D+0.750Lr+0.750	Upward	0.000	**0.000**				3,782.49
Final Composite : +D+0.750L+0.750S	Downward	20.533	**1.538**	0.0729		0.073	3,782.49
Final Composite : +D+0.750L+0.750S	Upward	0.000	**0.000**				3,782.49
Final Composite : +D+0.60W+H	Downward	20.533	**0.655**	0.0729		0.073	3,782.49
Final Composite : +D+0.60W+H	Upward	0.000	**0.000**				3,782.49
Final Composite : +D+0.750Lr+0.450	Downward	20.533	**0.655**	0.0729		0.073	3,782.49
Final Composite : +D+0.750Lr+0.450	Upward	0.000	**0.000**				3,782.49
Final Composite : +D+0.750S+0.450W	Downward	20.533	**0.655**	0.0729		0.073	3,782.49
Final Composite : +D+0.750S+0.450W	Upward	0.000	**0.000**				3,782.49
Final Composite : +0.60D+0.60W+0.6	Downward	20.533	**0.393**	0.0437		0.044	3,782.49
Final Composite : +0.60D+0.60W+0.6	Upward	0.000	**0.000**				3,782.49
Final Composite : +D+0.70E+0.60H	Downward	20.533	**0.655**	0.0729		0.073	3,782.49
Final Composite : +D+0.70E+0.60H	Upward	0.000	**0.000**				3,782.49
Final Composite : +D+0.750L+0.750S	Downward	20.533	**1.538**	0.0729		0.073	3,782.49
Final Composite : +D+0.750L+0.750S	Upward	0.000	**0.000**				3,782.49
Final Composite : +0.60D+0.70E+H	Downward	20.533	**0.393**	0.0437		0.044	3,782.49
Final Composite : +0.60D+0.70E+H	Upward	0.000	**0.000**				3,782.49
Final Composite : D Only	Downward	20.533	**0.655**	0.0729		0.073	3,782.49
Final Composite : D Only	Upward	0.000	**0.000**				3,782.49
Final Composite : Lr Only	Downward	40.000	**0.000**				3,782.49
Final Composite : Lr Only	Upward	40.000	**0.000**				3,782.49
Final Composite : L Only	Downward	20.800	**1.177**				3,782.49
Final Composite : L Only	Upward	0.000	**0.000**				3,782.49
Final Composite : S Only	Downward	40.000	**0.000**				3,782.49
Final Composite : S Only	Upward	40.000	**0.000**				3,782.49
Final Composite : W Only	Downward	40.000	**0.000**				3,782.49
Final Composite : W Only	Upward	40.000	**0.000**				3,782.49
Final Composite : E Only	Downward	40.000	**0.000**				3,782.49
Final Composite : E Only	Upward	40.000	**0.000**				3,782.49
Final Composite : H Only	Downward	40.000	**0.000**				3,782.49
Final Composite : H Only	Upward	40.000	**0.000**				3,782.49

Maximum Vertical Reactions - Unfactored

Support notation : Far left is #1

Load Combination	Support 1	Support 2
Overall MAXimum	60.350	82.036
Precomposite Loads	1.525	1.525
NonComposite Removed	1.525	1.525
Final Composite : +D+H	22.804	30.020
Final Composite : +D+L+H	60.350	82.036
Final Composite : +D+Lr+H	22.804	30.020
Final Composite : +D+S+H	22.804	30.020
Final Composite : +D+0.750Lr+0.750	50.964	69.032
Final Composite : +D+0.750L+0.750S	50.964	69.032
Final Composite : +D+0.60W+H	22.804	30.020
Final Composite : +D+0.750Lr+0.450	22.804	30.020
Final Composite : +D+0.750S+0.450W	22.804	30.020
Final Composite : +0.60D+0.60W+0.6	13.682	18.012
Final Composite : +D+0.70E+0.60H	22.804	30.020

Project Title:
Engineer:
Project ID:
Project Descr:

Composite Steel Beam

File = C:\Users\mackaic\DOCUME~1\Projects\FAA\FAAWAR~1\CALCS\Beam Calc.ec6 .
Software copyright ENERCALC, INC. 1983-2018, Build:10.18.12.22 .

Lic. # : KW-06009587 Licensee : JACOBS ENGINEERING

Description : Girder #3 Composite Check

Maximum Vertical Reactions - Unfactored

Support notation : Far left is #1

Load Combination	Support 1	Support 2
Final Composite : +D+0.750L+0.750S	50.964	69.032
Final Composite : +0.60D+0.70E+H	13.682	18.012
Final Composite : D Only	22.804	30.020
Final Composite : Lr Only		
Final Composite : L Only	37.547	52.016
Final Composite : S Only		
Final Composite : W Only		
Final Composite : E Only		
Final Composite : H Only		

Steel Section Properties : W24x76

Depth	=	23.900	in	I xx	=	2,100.00	in^4	I yy	=	82.500	in^4
Web Thick	=	0.440	in	S xx	=	176.00	in^3	S yy	=	18.400	in^3
Flange Width	=	8.990	in	R xx	=	9.690	in	R yy	=	1.920	in
Flange Thick	=	0.680	in	Zx	=	200.000	in^3	Zy	=	28.600	in^3
Area	=	22.400	in^2					J	=	2.680	in^4
Weight	=	76.250	plf								

Composite Section Properties

Span Number Plastic N. A. Location	Analysis Type	% Shear Connection	Plastic N.A. from Bottom	Sum Qn Shear (k)	# Studs per 1/2 Span	Mn - Capacity k-ft	Moment of Inertia I-Steel	I-Trans	I-Lwr Bound
Span 1									
PNA in Flange		100.0	23.448	714.000	34	1,396.88	2,100.0	4,836.0	4,114.8
PNA in Flange		95.0	23.409	678.300	32	1,381.46	2,100.0	4,836.0	4,074.6
PNA in Flange		90.0	23.369	642.600	30	1,365.94	2,100.0	4,836.0	4,030.5
PNA in Flange		85.0	23.329	606.900	29	1,350.31	2,100.0	4,836.0	3,982.2
PNA in Flange		80.0	23.290	571.200	27	1,334.57	2,100.0	4,836.0	3,929.4
PNA in Flange		75.0	23.250	535.500	25	1,318.73	2,100.0	4,836.0	3,871.8
PNA in Flange		70.0	23.210	499.800	24	1,302.79	2,100.0	4,836.0	3,809.1
PNA in Web		65.0	22.207	464.100	22	1,268.81	2,100.0	4,836.0	3,740.9
PNA in Web		60.0	21.395	428.400	20	1,249.11	2,100.0	4,836.0	3,666.8
PNA in Web		55.0	20.584	392.700	19	1,227.00	2,100.0	4,836.0	3,586.3
PNA in Web		50.0	19.773	357.000	17	1,202.48	2,100.0	4,836.0	3,499.1
PNA in Web		45.0	18.961	321.300	15	1,175.54	2,100.0	4,836.0	3,404.4
PNA in Web		40.0	18.150	285.600	14	1,146.18	2,100.0	4,836.0	3,301.9
PNA in Web		35.0	17.339	249.900	12	1,114.42	2,100.0	4,836.0	3,190.7
PNA in Web		30.0	16.527	214.200	10	1,080.24	2,100.0	4,836.0	3,070.2
PNA in Web		25.0	15.716	178.500	9	1,043.64	2,100.0	4,836.0	2,939.6

Operable Partition Framing Analysis

A new operable partition is being added to separate the conference room. The partition will be supported by a Wide Flange beam. 2 worst case load scenarios are checked: The partition spread over the entire beam length and the partition wall concentrated at the center of the beam.

Design Criteria

Partition Weight	$W_p := 9.5\ psf$
Partition Height	$h_p := 9\ ft$
Partition Length	$l_p := 38\ ft$
Partition Spread Load	$w_p := W_p \cdot h_p = 86\ plf$
Partition Concentrated Load	$P_p := W_p \cdot h_p \cdot l_p = 3.25\ kip$
Considering W14x30 Braced at 6 ft OC with kickers	$w_b := 30\ plf$
Beam Length	$l_b := 24\ ft$

Deflection criteria

Per ASTM E557, the deflection under dead loads must not exceed 1/8" per 12 ft (=L/(12*12*8) = L/1152)

Dead Load Deflection Limit $\delta_A := \frac{l_b}{1152} = 0.25\ in$

Partition Deflection $\Delta_A := .22 \cdot in$ Deflection OK

See Enercalc analysis at end of section. W14x30 is sufficient for the partition loading.

Existing Girder Check (Composite W24x76 with 26 Studs)

Floor Live Load (Assembly Area)	$LL_{flr} := 100\ psf$
Floor Dead Considering 10psf MEP/Arch + 44psf 5" concrete filled deck	$DL_{flr} := 10\ psf + 44\ psf = 54\ psf$
Typical Beam Live Load (Both Sides of Girder)	$LL_{beam} := LL_{flr} \cdot 5\ ft \cdot 24\ ft = 12\ kip$
Typical Beam Live Load (Both Sides of Girder)	$DL_{beam} := DL_{flr} \cdot 5\ ft \cdot 24\ ft = 6.48\ kip$
Partition Beam Load	$DL_{part} := P_p + 30\ plf \cdot 24\ ft = 3.97\ kip$

See Enercalc analysis at end of section. Existing Composite Girder is sufficient for the additional partition loading.

Project Title:
Engineer:
Project ID:
Project Descr:

Steel Beam

File = C:\Users\mackaic\DOCUME~1\Projects\FAA\FAAWAR~1\CALCS\Beam Calc.ec6 .
Software copyright ENERCALC, INC. 1983-2018, Build:10.18.12.22 .

Lic. # : KW-06009587 **Licensee : JACOBS ENGINEERING**

Description : Partition Concentrated

CODE REFERENCES

Calculations per AISC 360-10, IBC 2012, CBC 2013, ASCE 7-10
Load Combination Set : ASCE 7-16

Material Properties

Analysis Method : Load Resistance Factor Design
Beam Bracing : Beam bracing is defined as a set spacing over all spans
Bending Axis : Major Axis Bending

Fy : Steel Yield : 50.0 ksi
E: Modulus : 29,000.0 ksi

Unbraced Lengths

First Brace starts at 6.0 ft from Left-Most support
Regular spacing of lateral supports on length of beam = 6.0 ft

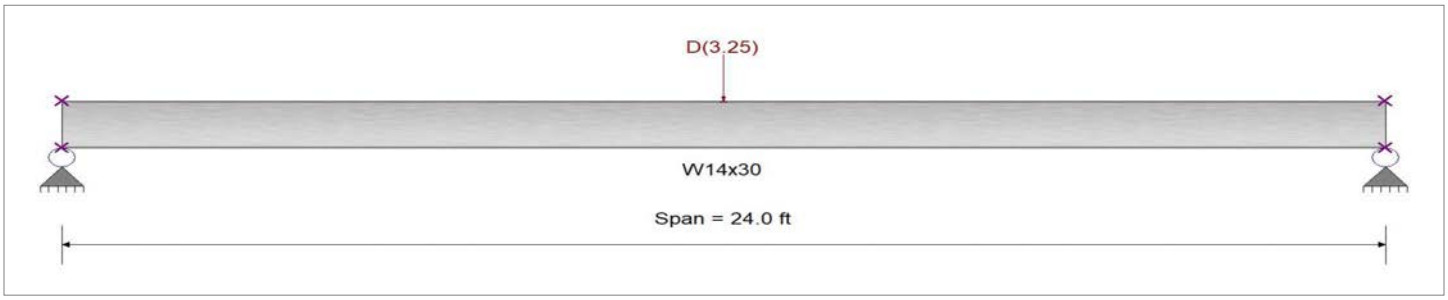

Applied Loads

Service loads entered. Load Factors will be applied for calculatior

Beam self weight calculated and added to loading
Load(s) for Span Number 1
Point Load : D = 3.250 k @ 12.0 ft, (Partition Concentrated)

DESIGN SUMMARY

Design OK

Maximum Bending Stress Ratio =	0.171 : 1	Maximum Shear Stress Ratio =	0.025 : 1
Section used for this span	W14x30	Section used for this span	W14x30
Mu : Applied	30.337 k-ft	Vu : Applied	2.781 k
Mn * Phi : Allowable	177.375 k-ft	Vn * Phi : Allowable	111.780 k
Load Combination	+1.40D+1.60H	Load Combination	+1.40D+1.60H
Location of maximum on span	12.000ft	Location of maximum on span	0.000 ft
Span # where maximum occurs	Span # 1	Span # where maximum occurs	Span # 1

Maximum Deflection

Max Downward Transient Deflection	0.000 in	Ratio =	0 <1152
Max Upward Transient Deflection	0.000 in	Ratio =	0 <1152
Max Downward Total Deflection	0.219 in	Ratio =	1314 >=1152
Max Upward Total Deflection	0.000 in	Ratio =	0 <1152

Maximum Forces & Stresses for Load Combinations

Load Combination		Max Stress Ratios		Summary of Moment Values							Summary of Shear Values		
Segment Length	Span #	M	V	max Mu +	max Mu -	Mu Max	Mnx	Phi*Mnx	Cb	Rm	VuMax	Vnx	Phi*Vnx
+1.40D+1.60H													
Dsgn. L = 5.97 ft	1	0.089	0.025	15.84		15.84	197.08	177.38	1.66	1.00	2.78	111.78	111.78
Dsgn. L = 6.03 ft	1	0.171	0.023	30.34	15.84	30.34	197.08	177.38	1.23	1.00	2.53	111.78	111.78
Dsgn. L = 5.97 ft	1	0.171	0.023	30.34	16.01	30.34	197.08	177.38	1.22	1.00	2.53	111.78	111.78
Dsgn. L = 6.03 ft	1	0.090	0.025	16.01		16.01	197.08	177.38	1.64	1.00	2.78	111.78	111.78
+1.20D+0.50Lr+1.60L+1.60H													
Dsgn. L = 5.97 ft	1	0.077	0.021	13.58		13.58	197.08	177.38	1.66	1.00	2.38	111.78	111.78
Dsgn. L = 6.03 ft	1	0.147	0.019	26.00	13.58	26.00	197.08	177.38	1.23	1.00	2.17	111.78	111.78
Dsgn. L = 5.97 ft	1	0.147	0.019	26.00	13.73	26.00	197.08	177.38	1.22	1.00	2.17	111.78	111.78
Dsgn. L = 6.03 ft	1	0.077	0.021	13.73		13.73	197.08	177.38	1.64	1.00	2.38	111.78	111.78
+1.20D+1.60L+0.50S+1.60H													
Dsgn. L = 5.97 ft	1	0.077	0.021	13.58		13.58	197.08	177.38	1.66	1.00	2.38	111.78	111.78
Dsgn. L = 6.03 ft	1	0.147	0.019	26.00	13.58	26.00	197.08	177.38	1.23	1.00	2.17	111.78	111.78
Dsgn. L = 5.97 ft	1	0.147	0.019	26.00	13.73	26.00	197.08	177.38	1.22	1.00	2.17	111.78	111.78
Dsgn. L = 6.03 ft	1	0.077	0.021	13.73		13.73	197.08	177.38	1.64	1.00	2.38	111.78	111.78
+1.20D+1.60Lr+L+1.60H													
Dsgn. L = 5.97 ft	1	0.077	0.021	13.58		13.58	197.08	177.38	1.66	1.00	2.38	111.78	111.78
Dsgn. L = 6.03 ft	1	0.147	0.019	26.00	13.58	26.00	197.08	177.38	1.23	1.00	2.17	111.78	111.78
Dsgn. L = 5.97 ft	1	0.147	0.019	26.00	13.73	26.00	197.08	177.38	1.22	1.00	2.17	111.78	111.78

Project Title:
Engineer:
Project ID:
Project Descr:

Steel Beam

File = C:\Users\mackaic\DOCUME~1\Projects\FAA\FAAWAR~1\CALCS\Beam Calc.ec6 .
Software copyright ENERCALC, INC. 1983-2018, Build:10.18.12.22 .

Lic. # : KW-06009587 **Licensee : JACOBS ENGINEERING**

Description : Partition Concentrated

Load Combination		Max Stress Ratios		Summary of Moment Values							Summary of Shear Values		
Segment Length	Span #	M	V	max Mu +	max Mu -	Mu Max	Mnx	Phi*Mnx	Cb	Rm	VuMax	Vnx	Phi*Vnx
Dsgn. L = 6.03 ft	1	0.077	0.021	13.73		13.73	197.08	177.38	1.64	1.00	2.38	111.78	111.78
+1.20D+1.60Lr+0.50W+1.60H													
Dsgn. L = 5.97 ft	1	0.077	0.021	13.58		13.58	197.08	177.38	1.66	1.00	2.38	111.78	111.78
Dsgn. L = 6.03 ft	1	0.147	0.019	26.00	13.58	26.00	197.08	177.38	1.23	1.00	2.17	111.78	111.78
Dsgn. L = 5.97 ft	1	0.147	0.019	26.00	13.73	26.00	197.08	177.38	1.22	1.00	2.17	111.78	111.78
Dsgn. L = 6.03 ft	1	0.077	0.021	13.73		13.73	197.08	177.38	1.64	1.00	2.38	111.78	111.78
+1.20D+L+1.60S+1.60H													
Dsgn. L = 5.97 ft	1	0.077	0.021	13.58		13.58	197.08	177.38	1.66	1.00	2.38	111.78	111.78
Dsgn. L = 6.03 ft	1	0.147	0.019	26.00	13.58	26.00	197.08	177.38	1.23	1.00	2.17	111.78	111.78
Dsgn. L = 5.97 ft	1	0.147	0.019	26.00	13.73	26.00	197.08	177.38	1.22	1.00	2.17	111.78	111.78
Dsgn. L = 6.03 ft	1	0.077	0.021	13.73		13.73	197.08	177.38	1.64	1.00	2.38	111.78	111.78
+1.20D+1.60S+0.50W+1.60H													
Dsgn. L = 5.97 ft	1	0.077	0.021	13.58		13.58	197.08	177.38	1.66	1.00	2.38	111.78	111.78
Dsgn. L = 6.03 ft	1	0.147	0.019	26.00	13.58	26.00	197.08	177.38	1.23	1.00	2.17	111.78	111.78
Dsgn. L = 5.97 ft	1	0.147	0.019	26.00	13.73	26.00	197.08	177.38	1.22	1.00	2.17	111.78	111.78
Dsgn. L = 6.03 ft	1	0.077	0.021	13.73		13.73	197.08	177.38	1.64	1.00	2.38	111.78	111.78
+1.20D+0.50Lr+L+W+1.60H													
Dsgn. L = 5.97 ft	1	0.077	0.021	13.58		13.58	197.08	177.38	1.66	1.00	2.38	111.78	111.78
Dsgn. L = 6.03 ft	1	0.147	0.019	26.00	13.58	26.00	197.08	177.38	1.23	1.00	2.17	111.78	111.78
Dsgn. L = 5.97 ft	1	0.147	0.019	26.00	13.73	26.00	197.08	177.38	1.22	1.00	2.17	111.78	111.78
Dsgn. L = 6.03 ft	1	0.077	0.021	13.73		13.73	197.08	177.38	1.64	1.00	2.38	111.78	111.78
+1.20D+L+0.50S+W+1.60H													
Dsgn. L = 5.97 ft	1	0.077	0.021	13.58		13.58	197.08	177.38	1.66	1.00	2.38	111.78	111.78
Dsgn. L = 6.03 ft	1	0.147	0.019	26.00	13.58	26.00	197.08	177.38	1.23	1.00	2.17	111.78	111.78
Dsgn. L = 5.97 ft	1	0.147	0.019	26.00	13.73	26.00	197.08	177.38	1.22	1.00	2.17	111.78	111.78
Dsgn. L = 6.03 ft	1	0.077	0.021	13.73		13.73	197.08	177.38	1.64	1.00	2.38	111.78	111.78
+0.90D+W+1.60H													
Dsgn. L = 5.97 ft	1	0.057	0.016	10.18		10.18	197.08	177.38	1.66	1.00	1.79	111.78	111.78
Dsgn. L = 6.03 ft	1	0.110	0.015	19.50	10.18	19.50	197.08	177.38	1.23	1.00	1.63	111.78	111.78
Dsgn. L = 5.97 ft	1	0.110	0.015	19.50	10.29	19.50	197.08	177.38	1.22	1.00	1.62	111.78	111.78
Dsgn. L = 6.03 ft	1	0.058	0.016	10.29		10.29	197.08	177.38	1.64	1.00	1.79	111.78	111.78
+1.20D+L+0.20S+E+1.90H													
Dsgn. L = 5.97 ft	1	0.077	0.021	13.58		13.58	197.08	177.38	1.66	1.00	2.38	111.78	111.78
Dsgn. L = 6.03 ft	1	0.147	0.019	26.00	13.58	26.00	197.08	177.38	1.23	1.00	2.17	111.78	111.78
Dsgn. L = 5.97 ft	1	0.147	0.019	26.00	13.73	26.00	197.08	177.38	1.22	1.00	2.17	111.78	111.78
Dsgn. L = 6.03 ft	1	0.077	0.021	13.73		13.73	197.08	177.38	1.64	1.00	2.38	111.78	111.78
+0.90D+E+0.90H													
Dsgn. L = 5.97 ft	1	0.057	0.016	10.18		10.18	197.08	177.38	1.66	1.00	1.79	111.78	111.78
Dsgn. L = 6.03 ft	1	0.110	0.015	19.50	10.18	19.50	197.08	177.38	1.23	1.00	1.63	111.78	111.78
Dsgn. L = 5.97 ft	1	0.110	0.015	19.50	10.29	19.50	197.08	177.38	1.22	1.00	1.62	111.78	111.78
Dsgn. L = 6.03 ft	1	0.058	0.016	10.29		10.29	197.08	177.38	1.64	1.00	1.79	111.78	111.78

Overall Maximum Deflections

Load Combination	Span	Max. "-" Defl	Location in Span	Load Combination	Max. "+" Defl	Location in Span
D Only	1	0.2192	12.069		0.0000	0.000

Vertical Reactions

Support notation : Far left is #1 Values in KIPS

Load Combination	Support 1	Support 2
Overall MAXimum	1.987	1.987
Overall MINimum	1.192	1.192
+D+H	1.987	1.987
+D+L+H	1.987	1.987
+D+Lr+H	1.987	1.987
+D+S+H	1.987	1.987
+D+0.750Lr+0.750L+H	1.987	1.987
+D+0.750L+0.750S+H	1.987	1.987
+D+0.60W+H	1.987	1.987
+D+0.750Lr+0.450W+H	1.987	1.987
+D+0.750S+0.450W+H	1.987	1.987
+0.60D+0.60W+0.60H	1.192	1.192
+D+0.70E+0.60H	1.987	1.987
+D+0.750L+0.750S+0.5250E+H	1.987	1.987
+0.60D+0.70E+H	1.192	1.192
D Only	1.987	1.987
Lr Only		
L Only		

Project Title:
Engineer:
Project ID:
Project Descr:

Steel Beam

File = C:\Users\mackaic\DOCUME~1\Projects\FAA\FAAWAR~1\CALCS\Beam Calc.ec6 .
Software copyright ENERCALC, INC. 1983-2018, Build:10.18.12.22 .

Lic. # : KW-06009587 **Licensee : JACOBS ENGINEERING**

Description : Partition Concentrated

Vertical Reactions

Support notation : Far left is #1 Values in KIPS

Load Combination	Support 1	Support 2
S Only		
W Only		
E Only		
H Only		

Project Title:
Engineer:
Project ID:
Project Descr:

Steel Beam

File = C:\Users\mackaic\DOCUME~1\Projects\FAA\FAAWAR~1\CALCS\Beam Calc.ec6 .
Software copyright ENERCALC, INC. 1983-2018, Build:10.18.12.22 .

Lic. # : KW-06009587 **Licensee : JACOBS ENGINEERING**

Description : Partition Distributed

CODE REFERENCES

Calculations per AISC 360-10, IBC 2012, CBC 2013, ASCE 7-10
Load Combination Set : ASCE 7-16

Material Properties

Analysis Method : Load Resistance Factor Design
Beam Bracing : Beam bracing is defined as a set spacing over all spans
Bending Axis : Major Axis Bending

Fy : Steel Yield : 50.0 ksi
E: Modulus : 29,000.0 ksi

Unbraced Lengths

First Brace starts at 6.0 ft from Left-Most support
Regular spacing of lateral supports on length of beam = 6.0 ft

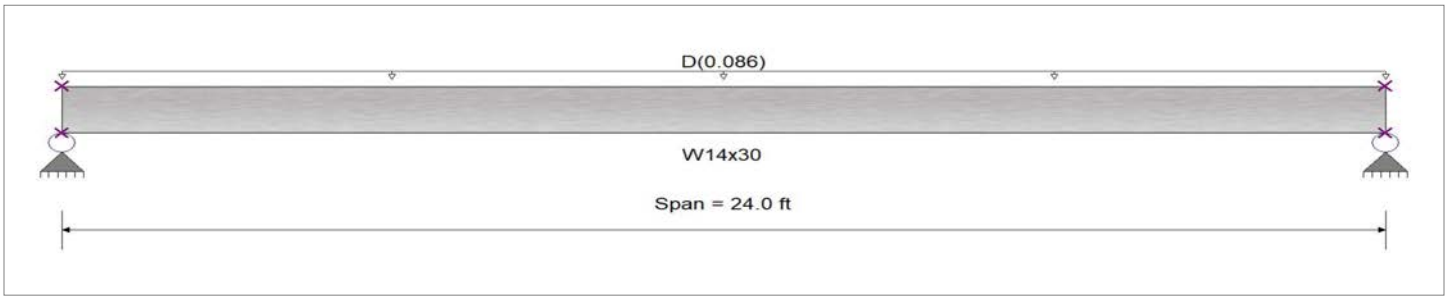

Applied Loads

Service loads entered. Load Factors will be applied for calculatior

Beam self weight calculated and added to loading
Uniform Load : D = 0.0860 k/ft, Tributary Width = 1.0 ft, (Partition Distributed)

DESIGN SUMMARY

Design OK

Maximum Bending Stress Ratio =	0.066 : 1	Maximum Shear Stress Ratio =	0.017 : 1
Section used for this span	W14x30	Section used for this span	W14x30
Mu : Applied	11.705 k-ft	Vu : Applied	1.951 k
Mn * Phi : Allowable	177.375 k-ft	Vn * Phi : Allowable	111.780 k
Load Combination	+1.40D+1.60H	Load Combination	+1.40D+1.60H
Location of maximum on span	12.000ft	Location of maximum on span	0.000 ft
Span # where maximum occurs	Span # 1	Span # where maximum occurs	Span # 1

Maximum Deflection

Max Downward Transient Deflection	0.000 in	Ratio =	0 <1152
Max Upward Transient Deflection	0.000 in	Ratio =	0 <1152
Max Downward Total Deflection	0.103 in	Ratio =	2791 >=1152
Max Upward Total Deflection	0.000 in	Ratio =	0 <1152

Maximum Forces & Stresses for Load Combinations

Load Combination		Max Stress Ratios		Summary of Moment Values							Summary of Shear Values		
Segment Length	Span #	M	V	max Mu +	max Mu -	Mu Max	Mnx	Phi*Mnx	Cb	Rm	VuMax	Vnx	Phi*Vnx
+1.40D+1.60H													
Dsgn. L = 5.97 ft	1	0.049	0.017	8.75		8.75	197.08	177.38	1.54	1.00	1.95	111.78	111.78
Dsgn. L = 6.03 ft	1	0.066	0.009	11.71	8.75	11.71	197.08	177.38	1.06	1.00	0.98	111.78	111.78
Dsgn. L = 5.97 ft	1	0.066	0.009	11.71	8.81	11.71	197.08	177.38	1.06	1.00	0.97	111.78	111.78
Dsgn. L = 6.03 ft	1	0.050	0.017	8.81		8.81	197.08	177.38	1.52	1.00	1.95	111.78	111.78
+1.20D+0.50Lr+1.60L+1.60H													
Dsgn. L = 5.97 ft	1	0.042	0.015	7.50		7.50	197.08	177.38	1.54	1.00	1.67	111.78	111.78
Dsgn. L = 6.03 ft	1	0.057	0.008	10.03	7.50	10.03	197.08	177.38	1.06	1.00	0.84	111.78	111.78
Dsgn. L = 5.97 ft	1	0.057	0.007	10.03	7.55	10.03	197.08	177.38	1.06	1.00	0.83	111.78	111.78
Dsgn. L = 6.03 ft	1	0.043	0.015	7.55		7.55	197.08	177.38	1.52	1.00	1.67	111.78	111.78
+1.20D+1.60L+0.50S+1.60H													
Dsgn. L = 5.97 ft	1	0.042	0.015	7.50		7.50	197.08	177.38	1.54	1.00	1.67	111.78	111.78
Dsgn. L = 6.03 ft	1	0.057	0.008	10.03	7.50	10.03	197.08	177.38	1.06	1.00	0.84	111.78	111.78
Dsgn. L = 5.97 ft	1	0.057	0.007	10.03	7.55	10.03	197.08	177.38	1.06	1.00	0.83	111.78	111.78
Dsgn. L = 6.03 ft	1	0.043	0.015	7.55		7.55	197.08	177.38	1.52	1.00	1.67	111.78	111.78
+1.20D+1.60Lr+L+1.60H													
Dsgn. L = 5.97 ft	1	0.042	0.015	7.50		7.50	197.08	177.38	1.54	1.00	1.67	111.78	111.78
Dsgn. L = 6.03 ft	1	0.057	0.008	10.03	7.50	10.03	197.08	177.38	1.06	1.00	0.84	111.78	111.78
Dsgn. L = 5.97 ft	1	0.057	0.007	10.03	7.55	10.03	197.08	177.38	1.06	1.00	0.83	111.78	111.78
Dsgn. L = 6.03 ft	1	0.043	0.015	7.55		7.55	197.08	177.38	1.52	1.00	1.67	111.78	111.78

Project Title:
Engineer:
Project ID:
Project Descr:

Steel Beam

File = C:\Users\mackaic\DOCUME~1\Projects\FAA\FAAWAR~1\CALCS\Beam Calc.ec6 .
Software copyright ENERCALC, INC. 1983-2018, Build:10.18.12.22 .

Lic. # : KW-06009587 **Licensee : JACOBS ENGINEERING**

Description : Partition Distributed

Load Combination / Segment Length	Span #	Max Stress Ratios M	Max Stress Ratios V	Summary of Moment Values max Mu +	max Mu -	Mu Max	Mnx	Phi*Mnx	Cb	Rm	Summary of Shear Values VuMax	Vnx	Phi*Vnx
+1.20D+1.60Lr+0.50W+1.60H													
Dsgn. L = 5.97 ft	1	0.042	0.015	7.50		7.50	197.08	177.38	1.54	1.00	1.67	111.78	111.78
Dsgn. L = 6.03 ft	1	0.057	0.008	10.03	7.50	10.03	197.08	177.38	1.06	1.00	0.84	111.78	111.78
Dsgn. L = 5.97 ft	1	0.057	0.007	10.03	7.55	10.03	197.08	177.38	1.06	1.00	0.83	111.78	111.78
Dsgn. L = 6.03 ft	1	0.043	0.015	7.55		7.55	197.08	177.38	1.52	1.00	1.67	111.78	111.78
+1.20D+L+1.60S+1.60H													
Dsgn. L = 5.97 ft	1	0.042	0.015	7.50		7.50	197.08	177.38	1.54	1.00	1.67	111.78	111.78
Dsgn. L = 6.03 ft	1	0.057	0.008	10.03	7.50	10.03	197.08	177.38	1.06	1.00	0.84	111.78	111.78
Dsgn. L = 5.97 ft	1	0.057	0.007	10.03	7.55	10.03	197.08	177.38	1.06	1.00	0.83	111.78	111.78
Dsgn. L = 6.03 ft	1	0.043	0.015	7.55		7.55	197.08	177.38	1.52	1.00	1.67	111.78	111.78
+1.20D+1.60S+0.50W+1.60H													
Dsgn. L = 5.97 ft	1	0.042	0.015	7.50		7.50	197.08	177.38	1.54	1.00	1.67	111.78	111.78
Dsgn. L = 6.03 ft	1	0.057	0.008	10.03	7.50	10.03	197.08	177.38	1.06	1.00	0.84	111.78	111.78
Dsgn. L = 5.97 ft	1	0.057	0.007	10.03	7.55	10.03	197.08	177.38	1.06	1.00	0.83	111.78	111.78
Dsgn. L = 6.03 ft	1	0.043	0.015	7.55		7.55	197.08	177.38	1.52	1.00	1.67	111.78	111.78
+1.20D+0.50Lr+L+W+1.60H													
Dsgn. L = 5.97 ft	1	0.042	0.015	7.50		7.50	197.08	177.38	1.54	1.00	1.67	111.78	111.78
Dsgn. L = 6.03 ft	1	0.057	0.008	10.03	7.50	10.03	197.08	177.38	1.06	1.00	0.84	111.78	111.78
Dsgn. L = 5.97 ft	1	0.057	0.007	10.03	7.55	10.03	197.08	177.38	1.06	1.00	0.83	111.78	111.78
Dsgn. L = 6.03 ft	1	0.043	0.015	7.55		7.55	197.08	177.38	1.52	1.00	1.67	111.78	111.78
+1.20D+L+0.50S+W+1.60H													
Dsgn. L = 5.97 ft	1	0.042	0.015	7.50		7.50	197.08	177.38	1.54	1.00	1.67	111.78	111.78
Dsgn. L = 6.03 ft	1	0.057	0.008	10.03	7.50	10.03	197.08	177.38	1.06	1.00	0.84	111.78	111.78
Dsgn. L = 5.97 ft	1	0.057	0.007	10.03	7.55	10.03	197.08	177.38	1.06	1.00	0.83	111.78	111.78
Dsgn. L = 6.03 ft	1	0.043	0.015	7.55		7.55	197.08	177.38	1.52	1.00	1.67	111.78	111.78
+0.90D+W+1.60H													
Dsgn. L = 5.97 ft	1	0.032	0.011	5.62		5.62	197.08	177.38	1.54	1.00	1.25	111.78	111.78
Dsgn. L = 6.03 ft	1	0.042	0.006	7.52	5.62	7.52	197.08	177.38	1.06	1.00	0.63	111.78	111.78
Dsgn. L = 5.97 ft	1	0.042	0.006	7.52	5.67	7.52	197.08	177.38	1.06	1.00	0.62	111.78	111.78
Dsgn. L = 6.03 ft	1	0.032	0.011	5.67		5.67	197.08	177.38	1.52	1.00	1.25	111.78	111.78
+1.20D+L+0.20S+E+1.90H													
Dsgn. L = 5.97 ft	1	0.042	0.015	7.50		7.50	197.08	177.38	1.54	1.00	1.67	111.78	111.78
Dsgn. L = 6.03 ft	1	0.057	0.008	10.03	7.50	10.03	197.08	177.38	1.06	1.00	0.84	111.78	111.78
Dsgn. L = 5.97 ft	1	0.057	0.007	10.03	7.55	10.03	197.08	177.38	1.06	1.00	0.83	111.78	111.78
Dsgn. L = 6.03 ft	1	0.043	0.015	7.55		7.55	197.08	177.38	1.52	1.00	1.67	111.78	111.78
+0.90D+E+0.90H													
Dsgn. L = 5.97 ft	1	0.032	0.011	5.62		5.62	197.08	177.38	1.54	1.00	1.25	111.78	111.78
Dsgn. L = 6.03 ft	1	0.042	0.006	7.52	5.62	7.52	197.08	177.38	1.06	1.00	0.63	111.78	111.78
Dsgn. L = 5.97 ft	1	0.042	0.006	7.52	5.67	7.52	197.08	177.38	1.06	1.00	0.62	111.78	111.78
Dsgn. L = 6.03 ft	1	0.032	0.011	5.67		5.67	197.08	177.38	1.52	1.00	1.25	111.78	111.78

Overall Maximum Deflections

Load Combination	Span	Max. "-" Defl	Location in Span	Load Combination	Max. "+" Defl	Location in Span
D Only	1	0.1032	12.069		0.0000	0.000

Vertical Reactions

Support notation : Far left is #1 Values in KIPS

Load Combination	Support 1	Support 2
Overall MAXimum	1.394	1.394
Overall MINimum	0.836	0.836
+D+H	1.394	1.394
+D+L+H	1.394	1.394
+D+Lr+H	1.394	1.394
+D+S+H	1.394	1.394
+D+0.750Lr+0.750L+H	1.394	1.394
+D+0.750L+0.750S+H	1.394	1.394
+D+0.60W+H	1.394	1.394
+D+0.750Lr+0.450W+H	1.394	1.394
+D+0.750S+0.450W+H	1.394	1.394
+0.60D+0.60W+0.60H	0.836	0.836
+D+0.70E+0.60H	1.394	1.394
+D+0.750L+0.750S+0.5250E+H	1.394	1.394
+0.60D+0.70E+H	0.836	0.836
D Only	1.394	1.394
Lr Only		
L Only		
S Only		

Project Title:
Engineer:
Project ID:
Project Descr:

Steel Beam

File = C:\Users\mackaic\DOCUME~1\Projects\FAA\FAAWAR~1\CALCS\Beam Calc.ec6 .
Software copyright ENERCALC, INC. 1983-2018, Build:10.18.12.22 .

Lic. # : KW-06009587 **Licensee : JACOBS ENGINEERING**

Description : Partition Distributed

Vertical Reactions

Support notation : Far left is #1 Values in KIPS

Load Combination	Support 1	Support 2
W Only		
E Only		
H Only		

Project Title:
Engineer:
Project ID:
Project Descr:

Composite Steel Beam

File = C:\Users\mackaic\DOCUME~1\Projects\FAA\FAAWAR~1\CALCS\Beam Calc.ec6 .
Software copyright ENERCALC, INC. 1983-2018, Build:10.18.12.22 .

Lic. # : KW-06009587 Licensee : JACOBS ENGINEERING

Description : Existing Girder at Partition

CODE REFERENCES

Calculations per AISC 360-10, IBC 2012, CBC 2013, ASCE 7-10
Load Combination Set : ASCE 7-16

Material Properties

Analysis Method : Load Resistance Factor Design
Beam Bracing : Beam is Fully Braced against lateral-torsional buckling by attached sl
Load Combination ASCE 7-16
Fy : Steel Yield : 50.0 ksi E: Modulus : 29,000.0 ksi

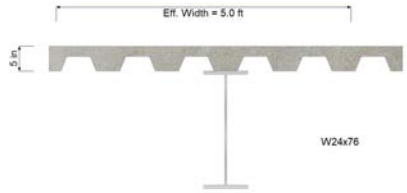

Composite Beam Section Data

Beam is UNSHORED for Concrete Placement

Total Slab Thickness	5.0 in	Concrete f'c	4.0 ksi	Stud Diameter	3/4" in
Effective Width	5.0 ft	Concrete Density	145.0 pcf	Qn : Stud Capacity	21.050 k
Metal Deck . . .		Rib Height	3.0 in	Top Width	7.250 in
Ribs :	Parallel	Rib Spacing	12.0 in	Btm Width	4.750 in

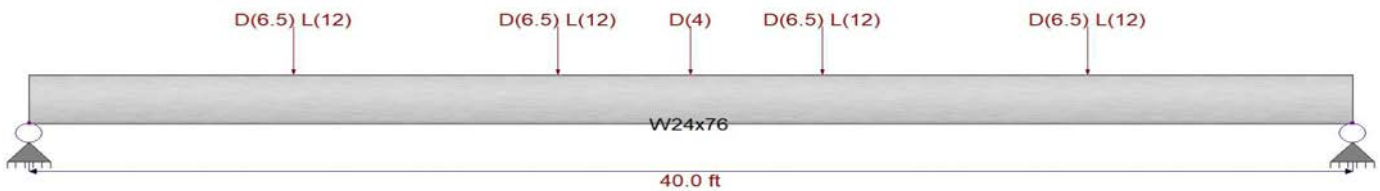

Applied Loads

Service loads entered. Load Factors will be applied for calculations.

Beam self weight calculated and added to loads
Load(s) for Span Number 1
Point Load : D = 6.50, L = 12.0 k @ 8.0 ft, Post Composite Only
Point Load : D = 6.50, L = 12.0 k @ 16.0 ft, Post Composite Only
Point Load : D = 6.50, L = 12.0 k @ 24.0 ft, Post Composite Only
Point Load : D = 6.50, L = 12.0 k @ 32.0 ft, Post Composite Only
Point Load : D = 4.0 k @ 20.0 ft, Post Composite Only

DESIGN SUMMARY

Design OK

MAX Bending Ratio = **0.708** : 1
Steel section **W24x76**

Composite

% Composite Action **36** %
Mu : Applied 714.30 k-ft
Mn * Phi : Allow 1,008.87 k-ft
Location of maximum 20.0 ft
Load Combination
+1.20D+0.50Lr+1.60L+1.60H

Pre-Composite

Mu : Applied 21.350 k-ft
Mn * Phi : Allowable 750.0 k-ft

MAX Shear Ratio = **0.185** : 1
Vu : Applied 58.230 k
Vn * Phi : Allow 315.480 k
Location of maximum 0.0 ft
Load Combination
+1.20D+0.50Lr+1.60L+1.60H

DEFLECTIONS

FINAL Composite
Max Downward 1.570 in
Max Upward 0.000 in
Defl Ratio 305
+D+L+H

Transient Composite
Max Downward 0.907 in
Max Upward 0.000 in
Defl Ratio 529
L Only

NonComposite
Max Downward 0.073 in
Max Upward 0.000 in
Defl Ratio 6585
PreCompDL+PreCompLL

Shear Stud Requirements

From Support 1 to 20.00 ft use 13 studs.
From 20.00 ft to Support 2 use 13 studs.

Maximum Forces & Stresses for Load Combinations

Project Title:
Engineer:
Project ID:
Project Descr:

Composite Steel Beam

File = C:\Users\mackaic\DOCUME~1\Projects\FAA\FAAWAR~1\CALCS\Beam Calc.ec6 .
Software copyright ENERCALC, INC. 1983-2018, Build:10.18.12.22 .

Lic. # : KW-06009587 **Licensee : JACOBS ENGINEERING**

Description : Existing Girder at Partition

Load Comb & Design Length	Span #	Max Stress Ratios M	Max Stress Ratios V	Bending Summary Mu-Applied	Bending Summary MnTr * Phi	Shear Summary Va	Shear Summary Vn * Phi
Pre Composite : D + Const L							
Span L = 40 ft	1	0.028	0.007	21.35	750.00	2.13	315.48
Final Composite : +1.40D+1.60H							
Span L = 40 ft	1	0.293	0.073	295.75	1,008.87	23.13	315.48
Final Composite : +1.20D+0.50Lr+1.6							
Span L = 40 ft	1	0.708	0.185	714.30	1,008.87	58.23	315.48
Final Composite : +1.20D+1.60L+0.50							
Span L = 40 ft	1	0.708	0.185	714.30	1,008.87	58.23	315.48
Final Composite : +1.20D+1.60Lr+L+1							
Span L = 40 ft	1	0.537	0.139	541.50	1,008.87	43.83	315.48
Final Composite : +1.20D+1.60Lr+0.5							
Span L = 40 ft	1	0.251	0.063	253.50	1,008.87	19.83	315.48
Final Composite : +1.20D+L+1.60S+1.							
Span L = 40 ft	1	0.537	0.139	541.50	1,008.87	43.83	315.48
Final Composite : +1.20D+1.60S+0.50							
Span L = 40 ft	1	0.251	0.063	253.50	1,008.87	19.83	315.48
Final Composite : +1.20D+0.50Lr+L+W							
Span L = 40 ft	1	0.537	0.139	541.50	1,008.87	43.83	315.48
Final Composite : +1.20D+L+0.50S+W+							
Span L = 40 ft	1	0.537	0.139	541.50	1,008.87	43.83	315.48
Final Composite : +0.90D+W+1.60H							
Span L = 40 ft	1	0.188	0.047	190.12	1,008.87	14.87	315.48
Final Composite : +1.20D+L+0.20S+E+							
Span L = 40 ft	1	0.537	0.139	541.50	1,008.87	43.83	315.48
Final Composite : +0.90D+E+0.90H							
Span L = 40 ft	1	0.188	0.047	190.12	1,008.87	14.87	315.48

Maximum Deflections for Load Combinations - Unfactored Loads

Load Combination		Location in Span (ft)	FINAL	DEFLECTIONS (in) Pre-Composite	DEFLECTIONS (in) NonComposite Removed	Added Post Composite	Ixx - Used in^4
Precomposite	Downward	20.267	**0.000**	0.0729			2,100.00
Precomposite	Upward	0.000	**0.000**				2,100.00
NonComposite Removed	Downward	20.267	**0.000**	0.0729			0.00
NonComposite Removed	Upward	0.000	**0.000**				0.00
Final Composite : +D+H	Downward	20.267	**0.591**	0.0729		0.073	3,213.63
Final Composite : +D+H	Upward	0.000	**0.000**				3,213.63
Final Composite : +D+L+H	Downward	20.267	**1.498**	0.0729		0.073	3,213.63
Final Composite : +D+L+H	Upward	0.000	**0.000**				3,213.63
Final Composite : +D+Lr+H	Downward	20.267	**0.591**	0.0729		0.073	3,213.63
Final Composite : +D+Lr+H	Upward	0.000	**0.000**				3,213.63
Final Composite : +D+S+H	Downward	20.267	**0.591**	0.0729		0.073	3,213.63
Final Composite : +D+S+H	Upward	0.000	**0.000**				3,213.63
Final Composite : +D+0.750Lr+0.750	Downward	20.267	**1.271**	0.0729		0.073	3,213.63
Final Composite : +D+0.750Lr+0.750	Upward	0.000	**0.000**				3,213.63
Final Composite : +D+0.750L+0.750S	Downward	20.267	**1.271**	0.0729		0.073	3,213.63
Final Composite : +D+0.750L+0.750S	Upward	0.000	**0.000**				3,213.63
Final Composite : +D+0.60W+H	Downward	20.267	**0.591**	0.0729		0.073	3,213.63
Final Composite : +D+0.60W+H	Upward	0.000	**0.000**				3,213.63
Final Composite : +D+0.750Lr+0.450	Downward	20.267	**0.591**	0.0729		0.073	3,213.63
Final Composite : +D+0.750Lr+0.450	Upward	0.000	**0.000**				3,213.63
Final Composite : +D+0.750S+0.450W	Downward	20.267	**0.591**	0.0729		0.073	3,213.63
Final Composite : +D+0.750S+0.450W	Upward	0.000	**0.000**				3,213.63
Final Composite : +0.60D+0.60W+0.6	Downward	20.267	**0.355**	0.0437		0.044	3,213.63
Final Composite : +0.60D+0.60W+0.6	Upward	0.000	**0.000**				3,213.63
Final Composite : +D+0.70E+0.60H	Downward	20.267	**0.591**	0.0729		0.073	3,213.63
Final Composite : +D+0.70E+0.60H	Upward	0.000	**0.000**				3,213.63
Final Composite : +D+0.750L+0.750S	Downward	20.267	**1.271**	0.0729		0.073	3,213.63
Final Composite : +D+0.750L+0.750S	Upward	0.000	**0.000**				3,213.63
Final Composite : +0.60D+0.70E+H	Downward	20.267	**0.355**	0.0437		0.044	3,213.63
Final Composite : +0.60D+0.70E+H	Upward	0.000	**0.000**				3,213.63
Final Composite : D Only	Downward	20.267	**0.591**	0.0729		0.073	3,213.63
Final Composite : D Only	Upward	0.000	**0.000**				3,213.63
Final Composite : Lr Only	Downward	40.000	**0.000**				3,213.63
Final Composite : Lr Only	Upward	40.000	**0.000**				3,213.63
Final Composite : L Only	Downward	20.267	**0.907**				3,213.63
Final Composite : L Only	Upward	0.000	**0.000**				3,213.63
Final Composite : S Only	Downward	40.000	**0.000**				3,213.63
Final Composite : S Only	Upward	40.000	**0.000**				3,213.63
Final Composite : W Only	Downward	40.000	**0.000**				3,213.63
Final Composite : W Only	Upward	40.000	**0.000**				3,213.63

Project Title:
Engineer:
Project ID:
Project Descr:

Composite Steel Beam

File = C:\Users\mackaic\DOCUME~1\Projects\FAA\FAAWAR~1\CALCS\Beam Calc.ec6 .
Software copyright ENERCALC, INC. 1983-2018, Build:10.18.12.22 .

Lic. # : KW-06009587 Licensee : JACOBS ENGINEERING

Description : Existing Girder at Partition

Maximum Deflections for Load Combinations - Unfactored Loads

Load Combination		Location in Span (ft)	FINAL	DEFLECTIONS (in) Pre-Composite	NonComposite Removed	Added Post Composite	Ixx - Used in^4
Final Composite : E Only	Downward	40.000	**0.000**				3,213.63
Final Composite : E Only	Upward	40.000	**0.000**				3,213.63
Final Composite : H Only	Downward	40.000	**0.000**				3,213.63
Final Composite : H Only	Upward	40.000	**0.000**				3,213.63

Maximum Vertical Reactions - Unfactored

Support notation : Far left is #1

Load Combination	Support 1	Support 2
Overall MAXimum	40.525	40.525
Precomposite Loads	1.525	1.525
NonComposite Removed	1.525	1.525
Final Composite : +D+H	16.525	16.525
Final Composite : +D+L+H	40.525	40.525
Final Composite : +D+Lr+H	16.525	16.525
Final Composite : +D+S+H	16.525	16.525
Final Composite : +D+0.750Lr+0.750	34.525	34.525
Final Composite : +D+0.750L+0.750S	34.525	34.525
Final Composite : +D+0.60W+H	16.525	16.525
Final Composite : +D+0.750Lr+0.450	16.525	16.525
Final Composite : +D+0.750S+0.450W	16.525	16.525
Final Composite : +0.60D+0.60W+0.6	9.915	9.915
Final Composite : +D+0.70E+0.60H	16.525	16.525
Final Composite : +D+0.750L+0.750S	34.525	34.525
Final Composite : +0.60D+0.70E+H	9.915	9.915
Final Composite : D Only	16.525	16.525
Final Composite : Lr Only		
Final Composite : L Only	24.000	24.000
Final Composite : S Only		
Final Composite : W Only		
Final Composite : E Only		
Final Composite : H Only		

Steel Section Properties : W24x76

Depth	=	23.900	in	I xx	=	2,100.00	in^4	I yy	=	82.500	in^4
Web Thick	=	0.440	in	S xx	=	176.00	in^3	S yy	=	18.400	in^3
Flange Width	=	8.990	in	R xx	=	9.690	in	R yy	=	1.920	in
Flange Thick	=	0.680	in	Zx	=	200.000	in^3	Zy	=	28.600	in^3
Area	=	22.400	in^2					J	=	2.680	in^4
Weight	=	76.250	plf								

Composite Section Properties

Span Number / Plastic N. A. Location	Analysis Type	% Shear Connection	Plastic N.A. from Bottom	Sum Qn Shear (k)	# Studs per 1/2 Span	Mn - Capacity k-ft	Moment of Inertia I-Steel	I-Trans	I-Lwr Bound
Span 1									
PNA in Flange		100.0	23.448	714.000	34	1,396.88	2,100.0	4,836.0	4,114.8
PNA in Flange		95.0	23.409	678.300	33	1,381.46	2,100.0	4,836.0	4,074.6
PNA in Flange		90.0	23.369	642.600	31	1,365.94	2,100.0	4,836.0	4,030.5
PNA in Flange		85.0	23.329	606.900	29	1,350.31	2,100.0	4,836.0	3,982.2
PNA in Flange		80.0	23.290	571.200	28	1,334.57	2,100.0	4,836.0	3,929.4
PNA in Flange		75.0	23.250	535.500	26	1,318.73	2,100.0	4,836.0	3,871.8
PNA in Flange		70.0	23.210	499.800	24	1,302.79	2,100.0	4,836.0	3,809.1
PNA in Web		65.0	22.207	464.100	23	1,268.81	2,100.0	4,836.0	3,740.9
PNA in Web		60.0	21.395	428.400	21	1,249.11	2,100.0	4,836.0	3,666.8
PNA in Web		55.0	20.584	392.700	19	1,227.00	2,100.0	4,836.0	3,586.3
PNA in Web		50.0	19.773	357.000	17	1,202.48	2,100.0	4,836.0	3,499.1
PNA in Web		45.0	18.961	321.300	16	1,175.54	2,100.0	4,836.0	3,404.4
PNA in Web		40.0	18.150	285.600	14	1,146.18	2,100.0	4,836.0	3,301.9
PNA in Web		35.0	17.339	249.900	12	1,114.42	2,100.0	4,836.0	3,190.7
PNA in Web		30.0	16.527	214.200	11	1,080.24	2,100.0	4,836.0	3,070.2
PNA in Web		25.0	15.716	178.500	9	1,043.64	2,100.0	4,836.0	2,939.6

Project Title:
Engineer:
Project ID:
Project Descr:

Steel Beam

File = C:\Users\mackaic\DOCUME~1\Projects\FAA\FAAWAR~1\CALCS\Beam Calc.ec6 .
Software copyright ENERCALC, INC. 1983-2018, Build:10.18.12.22 .

Lic. # : KW-06009587 **Licensee : JACOBS ENGINEERING**

Description : Worst Case Stringer

CODE REFERENCES

Calculations per AISC 360-10, IBC 2012, CBC 2013, ASCE 7-10
Load Combination Set : ASCE 7-16

Material Properties

Analysis Method : Load Resistance Factor Design
Beam Bracing : Completely Unbraced
Bending Axis : Major Axis Bending

Fy : Steel Yield : 50.0 ksi
E: Modulus : 29,000.0 ksi

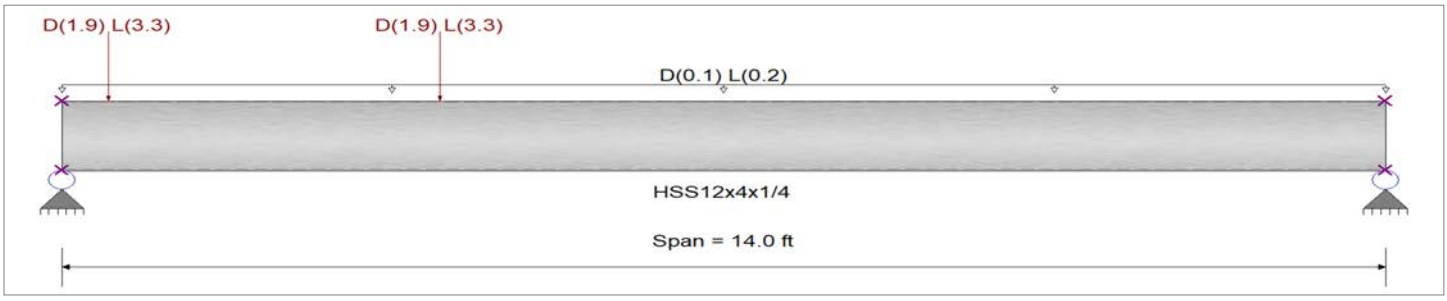

Applied Loads

Service loads entered. Load Factors will be applied for calculations.

Beam self weight calculated and added to loading
Uniform Load : D = 0.050, L = 0.10 ksf, Tributary Width = 2.0 ft, (Stair Load)

Point Load : D = 1.90, L = 3.30 k @ 0.50 ft, (Stringer 1)

Point Load : D = 1.90, L = 3.30 k @ 4.0 ft, (Stringer 1)

DESIGN SUMMARY

Design OK

Maximum Bending Stress Ratio = 0.351 : 1
Section used for this span HSS12x4x1/4
Mu : Applied 33.719 k-ft
Mn * Phi : Allowable 96.000 k-ft
Load Combination +1.20D+0.50Lr+1.60L+1.60H
Location of maximum on span 4.000 ft
Span # where maximum occurs Span # 1

Maximum Shear Stress Ratio = 0.112 : 1
Section used for this span HSS12x4x1/4
Vu : Applied 15.987 k
Vn * Phi : Allowable 142.189 k
Load Combination +1.20D+0.50Lr+1.60L+1.60H
Location of maximum on span 0.000 ft
Span # where maximum occurs Span # 1

Maximum Deflection

Max Downward Transient Deflection	0.134 in	Ratio =	1,255	>=360
Max Upward Transient Deflection	0.000 in	Ratio =	0	<360
Max Downward Total Deflection	0.213 in	Ratio =	787	>=240
Max Upward Total Deflection	0.000 in	Ratio =	0	<240

Maximum Forces & Stresses for Load Combinations

Load Combination		Max Stress Ratios		Summary of Moment Values							Summary of Shear Values		
Segment Length	Span #	M	V	max Mu +	max Mu -	Mu Max	Mnx	Phi*Mnx	Cb	Rm	VuMax	Vnx	Phi*Vnx
+1.40D+1.60H													
Dsgn. L = 14.00 ft	1	0.126	0.040	12.07		12.07	106.67	96.00	1.23	1.00	5.70	157.99	142.19
+1.20D+0.50Lr+1.60L+1.60H													
Dsgn. L = 14.00 ft	1	0.351	0.112	33.72		33.72	106.67	96.00	1.24	1.00	15.99	157.99	142.19
+1.20D+1.60L+0.50S+1.60H													
Dsgn. L = 14.00 ft	1	0.351	0.112	33.72		33.72	106.67	96.00	1.24	1.00	15.99	157.99	142.19
+1.20D+1.60Lr+L+1.60H													
Dsgn. L = 14.00 ft	1	0.260	0.083	24.95		24.95	106.67	96.00	1.24	1.00	11.82	157.99	142.19
+1.20D+1.60Lr+0.50W+1.60H													
Dsgn. L = 14.00 ft	1	0.108	0.034	10.35		10.35	106.67	96.00	1.23	1.00	4.88	157.99	142.19
+1.20D+L+1.60S+1.60H													
Dsgn. L = 14.00 ft	1	0.260	0.083	24.95		24.95	106.67	96.00	1.24	1.00	11.82	157.99	142.19
+1.20D+1.60S+0.50W+1.60H													
Dsgn. L = 14.00 ft	1	0.108	0.034	10.35		10.35	106.67	96.00	1.23	1.00	4.88	157.99	142.19
+1.20D+0.50Lr+L+W+1.60H													
Dsgn. L = 14.00 ft	1	0.260	0.083	24.95		24.95	106.67	96.00	1.24	1.00	11.82	157.99	142.19
+1.20D+L+0.50S+W+1.60H													
Dsgn. L = 14.00 ft	1	0.260	0.083	24.95		24.95	106.67	96.00	1.24	1.00	11.82	157.99	142.19

Project Title:
Engineer:
Project ID:
Project Descr:

Steel Beam

File = C:\Users\mackaic\DOCUME~1\Projects\FAA\FAAWAR~1\CALCS\Beam Calc.ec6 .
Software copyright ENERCALC, INC. 1983-2018, Build:10.18.12.22 .

Lic. # : KW-06009587 **Licensee : JACOBS ENGINEERING**

Description : Worst Case Stringer

Load Combination		Max Stress Ratios		Summary of Moment Values							Summary of Shear Values		
Segment Length	Span #	M	V	max Mu +	max Mu -	Mu Max	Mnx	Phi*Mnx	Cb	Rm	VuMax	Vnx	Phi*Vnx
+0.90D+W+1.60H													
Dsgn. L = 14.00 ft	1	0.081	0.026	7.76		7.76	106.67	96.00	1.23	1.00	3.66	157.99	142.19
+1.20D+L+0.20S+E+1.90H													
Dsgn. L = 14.00 ft	1	0.260	0.083	24.95		24.95	106.67	96.00	1.24	1.00	11.82	157.99	142.19
+0.90D+E+0.90H													
Dsgn. L = 14.00 ft	1	0.081	0.026	7.76		7.76	106.67	96.00	1.23	1.00	3.66	157.99	142.19

Overall Maximum Deflections

Load Combination	Span	Max. "-" Defl	Location in Span	Load Combination	Max. "+" Defl	Location in Span
+D+L+H	1	0.2135	6.520		0.0000	0.000

Vertical Reactions

Support notation : Far left is #1 Values in KIPS

Load Combination	Support 1	Support 2
Overall MAXimum	11.009	3.952
Overall MINimum	2.442	0.895
+D+H	4.070	1.491
+D+L+H	11.009	3.952
+D+Lr+H	4.070	1.491
+D+S+H	4.070	1.491
+D+0.750Lr+0.750L+H	9.274	3.337
+D+0.750L+0.750S+H	9.274	3.337
+D+0.60W+H	4.070	1.491
+D+0.750Lr+0.450W+H	4.070	1.491
+D+0.750S+0.450W+H	4.070	1.491
+0.60D+0.60W+0.60H	2.442	0.895
+D+0.70E+0.60H	4.070	1.491
+D+0.750L+0.750S+0.5250E+H	9.274	3.337
+0.60D+0.70E+H	2.442	0.895
D Only	4.070	1.491
Lr Only		
L Only	6.939	2.461
S Only		
W Only		
E Only		
H Only		

Project Title:
Engineer:
Project ID:
Project Descr:

Steel Column

File = C:\Users\mackaic\DOCUME~1\Projects\FAA\FAAWAR~1\CALCS\Beam Calc.ec6 .
Software copyright ENERCALC, INC. 1983-2018, Build:10.18.12.22 .

Lic. # : KW-06009587 **Licensee : JACOBS ENGINEERING**

Description : Stair Post

Code References

Calculations per AISC 360-10, IBC 2012, CBC 2013, ASCE 7-10
Load Combinations Used : ASCE 7-16

General Information

Steel Section Name : **HSS4x4x3/8**
Analysis Method : Load Resistance Factor
Steel Stress Grade
Fy : Steel Yield 50.0 ksi
E : Elastic Bending Modulus 29,000.0 ksi

Overall Column Height 10.0 ft
Top & Bottom Fixity Top Free, Bottom Fixed
Brace condition for deflection (buckling) along columns :
X-X (width) axis :
Unbraced Length for X-X Axis buckling = 10 ft, K = 2.1
Y-Y (depth) axis :
Unbraced Length for Y-Y Axis buckling = 10.0 ft, K = 2.1

Applied Loads

Service loads entered. Load Factors will be applied for calculations.

Column self weight included : 171.975 lbs * Dead Load Factor
AXIAL LOADS . . .
Stringer: Axial Load at 10.0 ft, D = 4.10, L = 7.0 k
BENDING LOADS . . .
Lat. Point Load at 10.0 ft creating Mx-x, E = 0.60 k

DESIGN SUMMARY

Bending & Shear Check Results

PASS Max. Axial+Bending Stress Ratio = **0.5526** : 1
Load Combination +1.20D+L+0.20S+E+1.90H
Location of max.above base 0.0 ft
At maximum location values are . . .
Pu 12.126 k
0.9 * Pn 36.745 k
Mu-x -6.0 k-ft
0.9 * Mn-x : 23.963 k-ft
Mu-y 0.0 k-ft
0.9 * Mn-y : 23.963 k-ft

PASS Maximum Shear Stress Ratio = **0.01294** : 1
Load Combination +1.20D+L+0.20S+E+1.90H
Location of max.above base 0.0 ft
At maximum location values are . . .
Vu : Applied 0.60 k
Vn * Phi : Allowable 46.377 k

Maximum Load Reactions . .
Top along X-X 0.0 k
Bottom along X-X 0.0 k
Top along Y-Y 0.0 k
Bottom along Y-Y 0.60 k

Maximum Load Deflections . . .
Along Y-Y 1.151 in at 10.0 ft above base
for load combination : E Only
Along X-X 0.0 in at 0.0 ft above base
for load combination :

Load Combination Results

Load Combination	Maximum Axial + Bending Stress Ratios: Stress Ratio	Status	Location	Cbx	Cby	KxLx/Rx	KyLy/Ry	Maximum Shear Ratios: Stress Ratio	Status	Location
+1.40D+1.60H	0.163	PASS	0.00 ft	1.67	1.00	171.43	171.43	0.000	PASS	0.00 ft
+1.20D+0.50Lr+1.60L+1.60H	0.444	PASS	0.00 ft	1.67	1.00	171.43	171.43	0.000	PASS	0.00 ft
+1.20D+1.60L+0.50S+1.60H	0.444	PASS	0.00 ft	1.67	1.00	171.43	171.43	0.000	PASS	0.00 ft
+1.20D+1.60Lr+L+1.60H	0.330	PASS	0.00 ft	1.67	1.00	171.43	171.43	0.000	PASS	0.00 ft
+1.20D+1.60Lr+0.50W+1.60H	0.140	PASS	0.00 ft	1.67	1.00	171.43	171.43	0.000	PASS	0.00 ft
+1.20D+L+1.60S+1.60H	0.330	PASS	0.00 ft	1.67	1.00	171.43	171.43	0.000	PASS	0.00 ft
+1.20D+1.60S+0.50W+1.60H	0.140	PASS	0.00 ft	1.67	1.00	171.43	171.43	0.000	PASS	0.00 ft
+1.20D+0.50Lr+L+W+1.60H	0.330	PASS	0.00 ft	1.67	1.00	171.43	171.43	0.000	PASS	0.00 ft
+1.20D+L+0.50S+W+1.60H	0.330	PASS	0.00 ft	1.67	1.00	171.43	171.43	0.000	PASS	0.00 ft
+0.90D+W+1.60H	0.105	PASS	0.00 ft	1.67	1.00	171.43	171.43	0.000	PASS	0.00 ft
+1.20D+L+0.20S+E+1.90H	0.553	PASS	0.00 ft	1.67	1.00	171.43	171.43	0.013	PASS	0.00 ft
+0.90D+E+0.90H	0.303	PASS	0.00 ft	1.67	1.00	171.43	171.43	0.013	PASS	0.00 ft

Maximum Reactions

Note: Only non-zero reactions are listed.

Load Combination	Axial Reaction @ Base	X-X Axis Reaction @ Base	@ Top	k	Y-Y Axis Reaction @ Base	@ Top	Mx - End Moments @ Base	@ Top	k-ft	My - End Moments @ Base	@ Top
+D+H	4.272										

Project Title:
Engineer:
Project ID:
Project Descr:

Steel Column

File = C:\Users\mackaic\DOCUME~1\Projects\FAA\FAAWAR~1\CALCS\Beam Calc.ec6 .
Software copyright ENERCALC, INC. 1983-2018, Build:10.18.12.22 .

Lic. # : KW-06009587 **Licensee : JACOBS ENGINEERING**

Description : Stair Post

Maximum Reactions

Note: Only non-zero reactions are listed.

Load Combination	Axial Reaction @ Base	X-X Axis Reaction @ Base	X-X Axis Reaction @ Top	k	Y-Y Axis Reaction @ Base	Y-Y Axis Reaction @ Top	Mx - End Moments @ Base	Mx - End Moments @ Top	k-ft	My - End Moments @ Base	My - End Moments @ Top
+D+L+H	11.272										
+D+Lr+H	4.272										
+D+S+H	4.272										
+D+0.750Lr+0.750L+H	9.522										
+D+0.750L+0.750S+H	9.522										
+D+0.60W+H	4.272										
+D+0.750Lr+0.450W+H	4.272										
+D+0.750S+0.450W+H	4.272										
+0.60D+0.60W+0.60H	2.563										
+D+0.70E+0.60H	4.272				0.420		-4.200				
+D+0.750L+0.750S+0.5250E+H	9.522				0.315		-3.150				
+0.60D+0.70E+H	2.563				0.420		-4.200				
D Only	4.272										
Lr Only											
L Only	7.000										
S Only											
W Only											
E Only					0.600		-6.000				
H Only											

Extreme Reactions

Item	Extreme Value	Axial Reaction @ Base	X-X Axis Reaction @ Base	X-X Axis Reaction @ Top	k	Y-Y Axis Reaction @ Base	Y-Y Axis Reaction @ Top	Mx - End Moments @ Base	Mx - End Moments @ Top	k-ft	My - End Moments @ Base	My - End Moments @ Top
Axial @ Base	Maximum	11.272										
"	Minimum											
Reaction, X-X Axis Base	Maximum	4.272										
"	Minimum	4.272										
Reaction, Y-Y Axis Base	Maximum					0.600		-6.000				
"	Minimum	4.272										
Reaction, X-X Axis Top	Maximum	4.272										
"	Minimum	4.272										
Reaction, Y-Y Axis Top	Maximum	4.272										
"	Minimum	4.272										
Moment, X-X Axis Base	Maximum	4.272										
"	Minimum		-6.000			0.600		-6.000				
Moment, Y-Y Axis Base	Maximum	4.272										
"	Minimum	4.272										
Moment, X-X Axis Top	Maximum	4.272										
"	Minimum	4.272										
Moment, Y-Y Axis Top	Maximum	4.272										
"	Minimum	4.272										

Maximum Deflections for Load Combinations

Load Combination	Max. X-X Deflection		Distance		Max. Y-Y Deflection		Distance	
+D+H	0.0000	in	0.000	ft	0.000	in	0.000	ft
+D+L+H	0.0000	in	0.000	ft	0.000	in	0.000	ft
+D+Lr+H	0.0000	in	0.000	ft	0.000	in	0.000	ft
+D+S+H	0.0000	in	0.000	ft	0.000	in	0.000	ft
+D+0.750Lr+0.750L+H	0.0000	in	0.000	ft	0.000	in	0.000	ft
+D+0.750L+0.750S+H	0.0000	in	0.000	ft	0.000	in	0.000	ft
+D+0.60W+H	0.0000	in	0.000	ft	0.000	in	0.000	ft
+D+0.750Lr+0.450W+H	0.0000	in	0.000	ft	0.000	in	0.000	ft
+D+0.750S+0.450W+H	0.0000	in	0.000	ft	0.000	in	0.000	ft
+0.60D+0.60W+0.60H	0.0000	in	0.000	ft	0.000	in	0.000	ft
+D+0.70E+0.60H	0.0000	in	0.000	ft	0.806	in	10.000	ft
+D+0.750L+0.750S+0.5250E+H	0.0000	in	0.000	ft	0.604	in	10.000	ft
+0.60D+0.70E+H	0.0000	in	0.000	ft	0.806	in	10.000	ft
D Only	0.0000	in	0.000	ft	0.000	in	0.000	ft
Lr Only	0.0000	in	0.000	ft	0.000	in	0.000	ft

Project Title:
Engineer:
Project ID:
Project Descr:

Steel Column

File = C:\Users\mackaic\DOCUME~1\Projects\FAA\FAAWAR~1\CALCS\Beam Calc.ec6 .
Software copyright ENERCALC, INC. 1983-2018, Build:10.18.12.22 .

Lic. # : KW-06009587 **Licensee : JACOBS ENGINEERING**

Description : Stair Post

Maximum Deflections for Load Combinations

Load Combination	Max. X-X Deflection		Distance		Max. Y-Y Deflection		Distance	
L Only	0.0000	in	0.000	ft	0.000	in	0.000	ft
S Only	0.0000	in	0.000	ft	0.000	in	0.000	ft
W Only	0.0000	in	0.000	ft	0.000	in	0.000	ft
E Only	0.0000	in	0.000	ft	1.151	in	10.000	ft
H Only	0.0000	in	0.000	ft	0.000	in	0.000	ft

Steel Section Properties : HSS4x4x3/8

Depth	=	4.000	in	I xx	=	10.30	in^4	J	=	17.500	in^4
Design Thick	=	0.349	in	S xx	=	5.13	in^3				
Width	=	4.000	in	R xx	=	1.470	in				
Wall Thick	=	0.375	in	Zx	=	6.390	in^3				
Area	=	4.780	in^2	I yy	=	10.300	in^4	C	=	9.140	in^3
Weight	=	17.197	plf	S yy	=	5.130	in^3				
				R yy	=	1.470	in				
Ycg	=	0.000	in								

Sketches

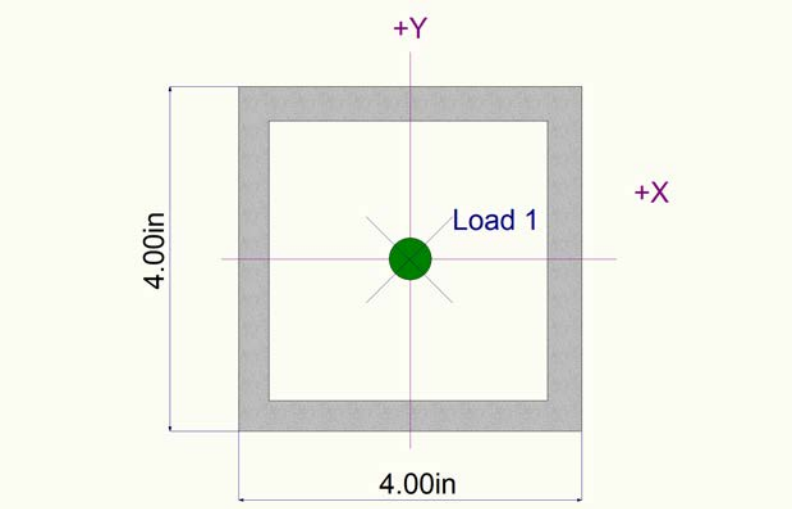

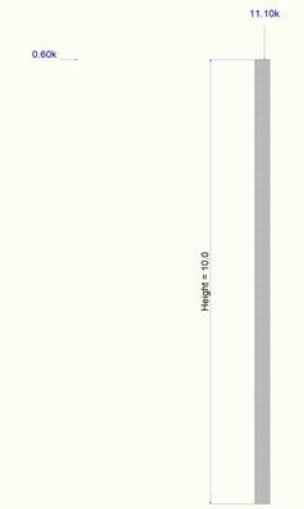

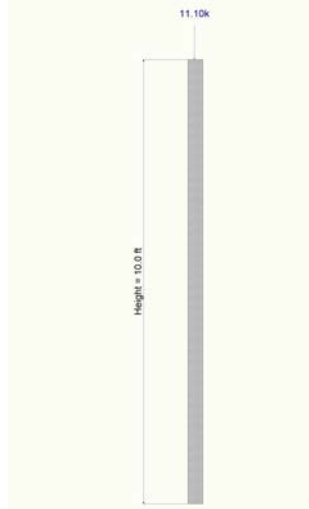

APPENDIX 4:

MECHANICAL
CALCULATIONS AND DATA SHEETS

System Component Selection Summary

Primary

System Name: UH-1

System Type:	Heating Only
Number of Zones	1
Number of Rooms	1

Component	Quantity
Cooling Coils	0
Heating Coils	1
Fans	1

Cooling Coils

Coil Location			Coil Selection at Design							Airflow Conditions at Design						Water Flow Conditions		
System	Zone	Type	Sizing Method	Time of Peak Mo/D/Hr	Total capacity (tons)	Total capacity (MBh)	Sensible capacity (MBh)	Vent Load (MBh)	Ov/undr sizing (MBh)	Airflow (cfm)	Vent (cfm)	Enter DB/HR (°F)	Enter DB/HR (gr/lb)	Leave DB/HR (°F)	Leave DB/HR (gr/lb)	Flow (gpm)	Enter Temp (°F)	Leave Temp (°F)
																	N/A	N/A

*Values do not include effects of plenum loads, heat exchangers such as evaporative cooling devices and similar components.

Heating Coils

Coil Location			Coil Selection at Design					Airflow Conditions at Design				Water Flow Conditions		
System	Zone	Type	Sizing Method	Time of Peak Mo/D/Hr	Total capacity (MBh)	Vent Load (MBh)	Ov/undr sizing (MBh)	Airflow (cfm)	Vent (cfm)	Enter DB (°F)	Leave DB (°F)	Flow (gpm)	Enter Temp (°F)	Leave Temp (°F)
	UH-1 Zone 00-44	Electric	Peak	1/21 24:00	1.6	0.0	1.6	60	0.0	70.0	95.0	N/A	N/A	N/A

Load/Airflows

Location				Cooling			Heating		
System	Zone	Room	Area (ft²)	Time of Peak Mo/D/Hr	Supply Airflow (cfm)	Sensible Load (Btu/h)	Time of Peak Mo/D/Hr	Supply Airflow (cfm)	Sensible Load (Btu/h)
UH-1			85	N/A	0	N/A	N/A	0	N/A
	Zone 00-44		85	7/21 14:40	0	500	1/21 24:00	59	1,595
		01_102_VESTIBULE	85	7/21 14:40	0	501	1/21 24:00	59	1,596

Fans

System	Zone	Type	Efficiency (%)	Efficiency with PRM Fan Override (%)	Static Pressure (in. Wg)	Flow Rate (cfm)	Power (W)	Power with PRM Fan Override (kW)	Motor Heat in Air (%)
	Zone 00-44 _UH-1_SUPPLY FAN	Zone	6.00	N/A	0.10	59	12	N/A	100.00

System Name: UH-2

System Type:	Heating Only
Number of Zones	1
Number of Rooms	1

Component	Quantity
Cooling Coils	0
Heating Coils	1
Fans	1

Cooling Coils

Coil Location			Coil Selection at Design							Airflow Conditions at Design						Water Flow Conditions		
System	Zone	Type	Sizing Method	Time of Peak Mo/D/Hr	Total capacity (tons)	Total capacity (MBh)	Sensible capacity (MBh)	Vent Load (MBh)	Ov/undr sizing (MBh)	Airflow (cfm)	Vent (cfm)	Enter DB/HR (°F)	Enter DB/HR (gr/lb)	Leave DB/HR (°F)	Leave DB/HR (gr/lb)	Flow (gpm)	Enter Temp (°F)	Leave Temp (°F)
																	N/A	N/A

*Values do not include effects of plenum loads, heat exchangers such as evaporative cooling devices and similar components.

Heating Coils

Coil Location			Coil Selection at Design					Airflow Conditions at Design				Water Flow Conditions		
System	Zone	Type	Sizing Method	Time of Peak Mo/D/Hr	Total capacity (MBh)	Vent Load (MBh)	Ov/undr sizing (MBh)	Airflow (cfm)	Vent (cfm)	Enter DB (°F)	Leave DB (°F)	Flow (gpm)	Enter Temp (°F)	Leave Temp (°F)
	UH-1 Zone 00-23	Electric	Peak	1/21 24:00	2.3	0.0	2.3	85	0.0	70.0	95.0	N/A	N/A	N/A

Load/Airflows

Location				Cooling			Heating		
System	Zone	Room	Area (ft²)	Time of Peak Mo/D/Hr	Supply Airflow (cfm)	Sensible Load (Btu/h)	Time of Peak Mo/D/Hr	Supply Airflow (cfm)	Sensible Load (Btu/h)
UH-2			186	N/A	0	N/A	N/A	0	N/A
	Zone 00-23		186	10/21 13:20	0	4,716	1/21 24:00	84	2,266
		01_130_VESTIBULE	186	11/21 13:00	0	4,841	1/21 24:00	85	2,276

Fans

System	Zone	Type	Efficiency (%)	Efficiency with PRM Fan Override (%)	Static Pressure (in. Wg)	Flow Rate (cfm)	Power (W)	Power with PRM Fan Override (kW)	Motor Heat in Air (%)
	Zone 00-23 _UH-1_SUPPLY FAN	Zone	6.00	N/A	0.10	84	17	N/A	100.00

System Name: RTU-01

System Type:	Variable Air Volume (VAV)
Number of Zones	22
Number of Rooms	39

Component	Quantity
Cooling Coils	1
Heating Coils	24
Fans	3

Cooling Coils

Coil Location			Coil Selection at Design							Airflow Conditions at Design						Water Flow Conditions		
System	Zone	Type	Sizing Method	Time of Peak Mo/D/Hr	Total capacity (tons)	Total capacity (MBh)	Sensible capacity (MBh)	Vent Load (MBh)	Ov/undr sizing (MBh)	Airflow (cfm)	Vent (cfm)	Enter DB/HR (°F)	Enter DB/HR (gr/lb)	Leave DB/HR (°F)	Leave DB/HR (gr/lb)	Flow (gpm)	Enter Temp (°F)	Leave Temp (°F)
SAAHP-1		DX	Block	8/21 14:00	23.7	283.9	200.0	42.5	160.1	7,407	1,130.6	78.5	71.50	52.9	59.93	N/A	N/A	N/A

*Values do not include effects of plenum loads, heat exchangers such as evaporative cooling devices and similar components.

Heating Coils

Coil Location			Coil Selection at Design					Airflow Conditions at Design				Water Flow Conditions		
System	Zone	Type	Sizing Method	Time of Peak Mo/D/Hr	Total capacity (MBh)	Vent Load (MBh)	Ov/undr sizing (MBh)	Airflow (cfm)	Vent (cfm)	Enter DB (°F)	Leave DB (°F)	Flow (gpm)	Enter Temp (°F)	Leave Temp (°F)
SAAHP-1HEATING		DX	Block	1/21 24:00	283.9	65.6	283.9	7,407	1,130.6	61.8	90.0	N/A	N/A	N/A
SHC-1		Fuel	Block	1/21 24:00	155.9	65.6	39.3	3,365	1,130.6	52.0	90.0	N/A	N/A	N/A
	VRH-1 VAV-1-01	Electric	Peak	1/21 00:20	0.0	0.0	0.0	29	0.0	90.0	95.0	N/A	N/A	N/A
	VRH-1 VAV-1-02	Electric	Peak	1/21 00:20	0.0	0.0	0.0	14	0.0	90.0	95.0	N/A	N/A	N/A
	VRH-1 VAV-1-03	Electric	Peak	1/21 24:00	0.0	0.0	0.0	188	0.0	90.0	95.0	N/A	N/A	N/A
	VRH-1 VAV-1-04	Electric	Peak	1/21 24:00	0.6	0.0	0.6	333	0.0	90.0	95.0	N/A	N/A	N/A
	VRH-1 VAV-1-05	Electric	Peak	1/21 24:00	0.0	0.0	0.0	29	0.0	90.0	95.0	N/A	N/A	N/A
	VRH-1 VAV-1-10	Electric	Peak	1/21 24:00	1.7	0.0	1.4	333	0.0	90.0	95.0	N/A	N/A	N/A
	VRH-1 VAV-1-11	Electric	Peak	1/21 24:00	0.0	0.0	0.0	168	0.0	90.0	95.0	N/A	N/A	N/A
	VRH-1 VAV-1-12	Electric	Peak	1/21 24:00	0.0	0.0	0.0	153	0.0	90.0	95.0	N/A	N/A	N/A
	VRH-1 VAV-1-13	Electric	Peak	1/21 24:00	0.0	0.0	0.0	18	0.0	90.0	95.0	N/A	N/A	N/A
	VRH-1 VAV-1-14	Electric	Peak	1/21 24:00	0.0	0.0	0.0	48	0.0	90.0	95.0	N/A	N/A	N/A
	VRH-1 VAV-1-15	Electric	Peak	1/21 24:00	0.0	0.0	0.0	162	0.0	90.0	95.0	N/A	N/A	N/A

Heating Coils

Coil Location			Coil Selection at Design					Airflow Conditions at Design				Water Flow Conditions		
System	Zone	Type	Sizing Method	Time of Peak Mo/D/Hr	Total capacity (MBh)	Vent Load (MBh)	Ov/undr sizing (MBh)	Airflow (cfm)	Vent (cfm)	Enter DB (°F)	Leave DB (°F)	Flow (gpm)	Enter Temp (°F)	Leave Temp (°F)
	VRH-1 VAV-1-22	Electric	Peak	1/21 24:00	0.0	0.0	0.0	28	0.0	90.0	95.0	N/A	N/A	N/A
	VRH-1 VAV-1-23	Electric	Peak	1/21 24:00	0.0	0.0	0.0	63	0.0	90.0	95.0	N/A	N/A	N/A
	VRH-1 VAV-1-24	Electric	Peak	1/21 24:00	0.0	0.0	0.0	29	0.0	90.0	95.0	N/A	N/A	N/A
	VRH-1 VAV-1-25	Electric	Peak	1/21 24:00	0.0	0.0	0.0	13	0.0	90.0	95.0	N/A	N/A	N/A
	VRH-1 VAV-1-26	Electric	Peak	1/21 24:00	0.0	0.0	0.0	13	0.0	90.0	95.0	N/A	N/A	N/A
VRH-1 VAV-1-27		Electric	Peak	1/21 00:20	0.0	0.0	0.0	10	0.0	90.0	95.0	N/A	N/A	N/A
	VRH-1 VAV-1-28	Electric	Peak	1/21 24:00	0.0	0.0	0.0	29	0.0	90.0	95.0	N/A	N/A	N/A
	VRH-1 VAV-1-31	Electric	Peak	1/21 24:00	0.2	0.0	0.0	39	0.0	90.0	95.0	N/A	N/A	N/A
	VRH-1 VAV-1-36	Electric	Peak	1/21 24:00	0.0	0.0	0.0	19	0.0	90.0	95.0	N/A	N/A	N/A
	VRH-1 VAV-1-37	Electric	Peak	1/21 24:00	0.0	0.0	0.0	29	0.0	90.0	95.0	N/A	N/A	N/A
	VRH-1 VAV-1-39	Electric	Peak	1/21 00:20	0.0	0.0	0.0	20	0.0	90.0	95.0	N/A	N/A	N/A

Load/Airflows

Location				Cooling			Heating		
System	Zone	Room	Area (ft²)	Time of Peak Mo/D/Hr	Supply Airflow (cfm)	Sensible Load (Btu/h)	Time of Peak Mo/D/Hr	Supply Airflow (cfm)	Sensible Load (Btu/h)
RTU-01			10,095	N/A	7,326	N/A	N/A	1,696	N/A
	VAV-1-01		300	8/21 14:40	311	4,135		93	0
		01_166_OFFICE_R01	145	7/21 20:00	152	1,934		46	0
		01_169_OFFICE_R01	155	7/21 17:40	159	2,236		48	0
	VAV-1-02		145	9/21 14:40	152	2,019		46	0
		01_165_OFFICE_R01	145	7/21 20:00	152	2,009		46	0
	VAV-1-03		1,187	10/21 13:20	1,236	18,750	1/21 24:00	371	4,863
		01_120B_CORR_R01	163	10/21 13:40	108	560	1/21 24:00	33	379
		01_121B_OPEN OFFICE_R01	782	10/21 13:20	966	17,432	1/21 24:00	290	4,090
		01_160A_CORR_R01	242	9/21 10:20	161	176	1/21 24:00	48	79
	VAV-1-04		1,139	8/21 10:20	1,244	23,813	1/21 24:00	373	8,601
		01_121C_OPEN OFFICE_R01	738	8/21 10:20	968	19,740	1/21 24:00	290	7,816
		01_170A_CORR_R01	257	7/21 10:20	172	804	1/21 24:00	52	410
		Room 00-85	144	8/21 10:20	136	2,755	1/21 24:00	41	743
	VAV-1-05		291	9/21 14:20	305	4,037	1/21 24:00	92	248
		01_164_OFFICE_R01	150	9/21 14:40	156	2,033	1/21 24:00	47	17
		01_172_OFFICE_R01	141	8/21 12:00	150	2,067	1/21 24:00	45	27
	VAV-1-10		875	9/21 15:40	1,073	23,441	1/21 24:00	322	8,587
		01_120A_OPEN OFFICE_R01	725	9/21 15:40	980	21,315	1/21 24:00	294	7,916
		Room 00-82	151	9/21 16:00	142	2,955	1/21 24:00	43	794
	VAV-1-11		975	10/21 14:00	1,141	20,044	1/21 24:00	342	4,325
		01_120B_OPEN OFFICE_R01	807	10/21 14:00	982	17,480	1/21 24:00	295	4,137
		Room 00-83	168	10/21 14:20	158	2,590	1/21 24:00	48	351
	VAV-1-12		1,157	10/21 13:20	1,216	18,853	1/21 24:00	365	3,953
		01_120A CORR_R02	409	10/21 14:00	273	721	1/21 24:00	82	402
		01_120C_OPEN OFFICE_R01	748	10/21 13:20	943	16,978	1/21 24:00	283	3,291
	VAV-1-13		198	10/21 14:00	187	1,681	1/21 24:00	56	128
		01_133_RECEIVING_R01	198	10/21 14:00	187	1,685	1/21 24:00	56	109
	VAV-1-14		242	10/21 14:40	511	2,972	1/21 24:00	153	456
		01_122_CONF RM_R01	135	10/21 15:00	368	2,118	1/21 24:00	110	168
		01_134_STORAGE_R01	107	10/21 14:40	143	464	1/21 24:00	43	259

Load/Airflows

Location				Cooling			Heating		
System	Zone	Room	Area (ft²)	Time of Peak Mo/D/Hr	Supply Airflow (cfm)	Sensible Load (Btu/h)	Time of Peak Mo/D/Hr	Supply Airflow (cfm)	Sensible Load (Btu/h)
RTU-01			10,095	N/A	7,326	N/A	N/A	1,696	N/A
	VAV-1-15		1,019	10/21 13:20	1,194	20,211	1/21 24:00	358	4,185
		01_121A_OPEN OFFICE_R01	767	10/21 13:20	956	17,039	1/21 24:00	287	3,606
		Room 00-84	252	10/21 13:40	238	3,171	1/21 24:00	71	373
	VAV-1-22		284	9/21 15:00	300	3,690	1/21 24:00	90	153
		01_160_OFFICE_R01	142	7/21 19:00	150	1,866	1/21 24:00	45	37
		01_161_OFFICE_R01	142	7/21 20:00	150	1,807	1/21 24:00	45	26
	VAV-1-23		134	6/21 19:00	674	6,787	1/21 24:00	202	158
		01_158_ BREAK RM_R02	134	6/21 19:00	674	6,786	1/21 24:00	202	97
	VAV-1-24		290	9/21 14:40	304	3,853	1/21 24:00	91	220
		01_162_OFFICE_R01	148	8/21 20:00	154	1,851	1/21 24:00	46	30
		01_163_OFFICE_R01	142	9/21 14:40	150	1,888	1/21 24:00	45	56
	VAV-1-25		131	9/21 14:20	143	1,861	1/21 24:00	43	56
		01_155_MOTHERS RM_R01	131	9/21 14:40	143	1,802	1/21 24:00	43	27
	VAV-1-26		148	8/21 15:20	139	1,404	1/21 24:00	42	180
		01_159_OFFICE_R01	148	7/21 18:00	139	1,386	1/21 24:00	42	81
	VAV-1-27		675	7/21 18:40	230	5,030		69	0
		01_105_FURNITURE ST_R02	120	7/21 19:00	80	902		24	0
		01_106_STORAGE_R02	46	7/21 19:00	30	90	1/21 24:00	9	69
		01_156_WOMEN'S TOILET_R01	245	8/21 19:00	70	1,521	1/21 22:40	21	9
		01_157_MEN'S TOILET_R01	265	7/21 19:00	81	1,780	1/21 24:00	24	14
	VAV-1-28		299	8/21 14:40	310	4,006	1/21 24:00	93	423
		01_167_OFFICE_R01	148	7/21 19:00	154	1,995	1/21 24:00	46	75
		01_168_OFFICE_R01	151	7/21 11:40	156	2,097	1/21 24:00	47	81
	VAV-1-31		76	7/21 09:20	125	2,389	1/21 24:00	37	1,008
		01_124_BREAK OUT_R01	76	7/21 09:20	115	2,377	1/21 24:00	35	932
	VAV-1-36		68	8/21 10:00	75	1,640	1/21 24:00	23	497
		01_174_PRINT_R01	68	7/21 10:00	64	1,267	1/21 24:00	19	400
	VAV-1-37		140	7/21 10:20	133	1,822	1/21 24:00	40	744
		01_173_OFFICE_R01	140	7/21 10:20	133	1,834	1/21 24:00	40	668
	VAV-1-39		322	6/21 05:40	215	235		64	0
		01_100A_CORR_R02	322	7/21 18:20	215	254		64	0

Fans

System	Zone	Type	Efficiency (%)	Efficiency with PRM Fan Override (%)	Static Pressure (in. Wg)	Flow Rate (cfm)	Power (W)	Power with PRM Fan Override (kW)	Motor Heat in Air (%)
RTU-01 EXF-1		System	53.00	N/A	3.00	7407	4,894	N/A	100.00
RTU-01 SF-1		System	53.00	N/A	3.00	7407	4,894	N/A	100.00
VAV-1-27 _EXHAUST FAN		Zone	10.00	N/A	0.00	1020	0	N/A	100.00

System Name: DSS_01

System Type:	Constant Volume (CV)
Number of Zones	1
Number of Rooms	1

Component	Quantity
Cooling Coils	1
Heating Coils	1
Fans	1

Cooling Coils

Coil Location			Coil Selection at Design							Airflow Conditions at Design						Water Flow Conditions		
System	Zone	Type	Sizing Method	Time of Peak Mo/D/Hr	Total capacity (tons)	Total capacity (MBh)	Sensible capacity (MBh)	Vent Load (MBh)	Ov/undr sizing (MBh)	Airflow (cfm)	Vent (cfm)	Enter DB/HR (°F)	Enter DB/HR (gr/lb)	Leave DB/HR (°F)	Leave DB/HR (gr/lb)	Flow (gpm)	Enter Temp (°F)	Leave Temp (°F)
DSS Zone 00-45		DX	Peak	7/21 19:00	1.7	19.9	17.5	0.0	-0.4	605	0.0	81.0	62.85	53.5	61.44	N/A	N/A	N/A

*Values do not include effects of plenum loads, heat exchangers such as evaporative cooling devices and similar components.

Heating Coils

Coil Location			Coil Selection at Design					Airflow Conditions at Design				Water Flow Conditions		
System	Zone	Type	Sizing Method	Time of Peak Mo/D/Hr	Total capacity (MBh)	Vent Load (MBh)	Ov/undr sizing (MBh)	Airflow (cfm)	Vent (cfm)	Enter DB (°F)	Leave DB (°F)	Flow (gpm)	Enter Temp (°F)	Leave Temp (°F)
DSS Zone 00-45		Electric	Peak	1/21 00:20	9.8	0.0	9.8	605	0.0	81.0	95.0	N/A	N/A	N/A

Load/Airflows

Location				Cooling			Heating		
System	Zone	Room	Area (ft²)	Time of Peak Mo/D/Hr	Supply Airflow (cfm)	Sensible Load (Btu/h)	Time of Peak Mo/D/Hr	Supply Airflow (cfm)	Sensible Load (Btu/h)
DSS_01			69	N/A	0	N/A	N/A	0	N/A
	Zone 00-45		69	7/21 19:00	605	17,195		605	0
		01_104_ELEV MACH	69	7/21 19:00	611	17,372		611	0

Fans

System	Zone	Type	Efficiency (%)	Efficiency with PRM Fan Override (%)	Static Pressure (in. Wg)	Flow Rate (cfm)	Power (W)	Power with PRM Fan Override (kW)	Motor Heat in Air (%)
Zone 00-45 _DSS_01 SF-1		System	78.00	N/A	3.00	605	273	N/A	100.00

System Name: DSS_10

System Type:	Constant Volume (CV)
Number of Zones	1
Number of Rooms	1

Component	Quantity
Cooling Coils	1
Heating Coils	1
Fans	1

Cooling Coils

Coil Location			Coil Selection at Design							Airflow Conditions at Design						Water Flow Conditions		
System	Zone	Type	Sizing Method	Time of Peak Mo/D/Hr	Total capacity (tons)	Total capacity (MBh)	Sensible capacity (MBh)	Vent Load (MBh)	Ov/undr sizing (MBh)	Airflow (cfm)	Vent (cfm)	Enter DB/HR (°F)	Enter DB/HR (gr/lb)	Leave DB/HR (°F)	Leave DB/HR (gr/lb)	Flow (gpm)	Enter Temp (°F)	Leave Temp (°F)
DSS Zone 00-24		DX	Peak	9/21 12:00	0.5	6.2	5.4	0.0	-0.8	186	0.0	81.5	62.85	53.5	61.44	N/A	N/A	N/A

*Values do not include effects of plenum loads, heat exchangers such as evaporative cooling devices and similar components.

Heating Coils

Coil Location			Coil Selection at Design					Airflow Conditions at Design				Water Flow Conditions		
System	Zone	Type	Sizing Method	Time of Peak Mo/D/Hr	Total capacity (MBh)	Vent Load (MBh)	Ov/undr sizing (MBh)	Airflow (cfm)	Vent (cfm)	Enter DB (°F)	Leave DB (°F)	Flow (gpm)	Enter Temp (°F)	Leave Temp (°F)
DSS Zone 00-24		Electric	Peak	1/21 00:20	3.6	0.0	3.6	186	0.0	78.2	95.0	N/A	N/A	N/A

Load/Airflows

Location				Cooling			Heating		
System	Zone	Room	Area (ft²)	Time of Peak Mo/D/Hr	Supply Airflow (cfm)	Sensible Load (Btu/h)	Time of Peak Mo/D/Hr	Supply Airflow (cfm)	Sensible Load (Btu/h)
DSS_10			213	N/A	0	N/A	N/A	0	N/A
	Zone 00-24		213	9/21 12:00	186	5,272		186	0
		01_132_ELEC/TEL	213	9/21 12:00	191	5,420		191	0

Fans

System	Zone	Type	Efficiency (%)	Efficiency with PRM Fan Override (%)	Static Pressure (in. Wg)	Flow Rate (cfm)	Power (W)	Power with PRM Fan Override (kW)	Motor Heat in Air (%)
Zone 00-24 _DSS_10 SF-1		System	78.00	N/A	3.00	186	84	N/A	100.00

System Name: DSS_03

System Type:	Constant Volume (CV)
Number of Zones	2
Number of Rooms	2

Component	Quantity
Cooling Coils	2
Heating Coils	2
Fans	2

Cooling Coils

Coil Location			Coil Selection at Design							Airflow Conditions at Design						Water Flow Conditions		
System	Zone	Type	Sizing Method	Time of Peak Mo/D/Hr	Total capacity (tons)	Total capacity (MBh)	Sensible capacity (MBh)	Vent Load (MBh)	Ov/undr sizing (MBh)	Airflow (cfm)	Vent (cfm)	Enter DB/HR (°F)	Enter DB/HR (gr/lb)	Leave DB/HR (°F)	Leave DB/HR (gr/lb)	Flow (gpm)	Enter Temp (°F)	Leave Temp (°F)
DSS Zone 00-48		DX	Peak	8/21 11:40	0.3	3.9	3.4	0.0	-0.6	116	0.0	81.4	62.85	53.5	61.44	N/A	N/A	N/A
DSS Zone 00-49		DX	Peak	8/21 11:40	0.0	0.4	0.4	0.0	-0.1	11	0.0	84.9	62.85	53.5	61.44	N/A	N/A	N/A

*Values do not include effects of plenum loads, heat exchangers such as evaporative cooling devices and similar components.

Heating Coils

Coil Location			Coil Selection at Design					Airflow Conditions at Design				Water Flow Conditions		
System	Zone	Type	Sizing Method	Time of Peak Mo/D/Hr	Total capacity (MBh)	Vent Load (MBh)	Ov/undr sizing (MBh)	Airflow (cfm)	Vent (cfm)	Enter DB (°F)	Leave DB (°F)	Flow (gpm)	Enter Temp (°F)	Leave Temp (°F)
DSS Zone 00-48		Electric	Peak	1/21 00:20	1.9	0.0	1.9	116	0.0	81.0	95.0	N/A	N/A	N/A
DSS Zone 00-49		Electric	Peak	1/21 00:20	0.3	0.0	0.3	11	0.0	72.3	95.0	N/A	N/A	N/A

Load/Airflows

Location				Cooling			Heating		
System	Zone	Room	Area (ft²)	Time of Peak Mo/D/Hr	Supply Airflow (cfm)	Sensible Load (Btu/h)	Time of Peak Mo/D/Hr	Supply Airflow (cfm)	Sensible Load (Btu/h)
DSS_03			212	N/A	0	N/A	N/A	0	N/A
	Zone 00-48		108	8/21 11:40	116	3,295		116	0
		01_170_ELEC_R01	108	7/21 12:00	116	3,302		116	0
	Zone 00-49		105	8/21 11:40	11	310		11	0
		01_171_TELECOM	105	7/21 12:00	11	315		11	0

Fans

System	Zone	Type	Efficiency (%)	Efficiency with PRM Fan Override (%)	Static Pressure (in. Wg)	Flow Rate (cfm)	Power (W)	Power with PRM Fan Override (kW)	Motor Heat in Air (%)
Zone 00-48	_DSS_03 SF-1	System	78.00	N/A	3.00	116	52	N/A	100.00
Zone 00-49	_DSS_03 SF-1	System	78.00	N/A	3.00	11	5	N/A	100.00

System Name: RTU-02

System Type:	Variable Air Volume (VAV)
Number of Zones	17
Number of Rooms	26

Component	Quantity
Cooling Coils	1
Heating Coils	19
Fans	2

Cooling Coils

Coil Location			Coil Selection at Design							Airflow Conditions at Design						Water Flow Conditions		
System	Zone	Type	Sizing Method	Time of Peak Mo/D/Hr	Total capacity (tons)	Total capacity (MBh)	Sensible capacity (MBh)	Vent Load (MBh)	Ov/undr sizing (MBh)	Airflow (cfm)	Vent (cfm)	Enter DB/HR (°F)	Enter DB/HR (gr/lb)	Leave DB/HR (°F)	Leave DB/HR (gr/lb)	Flow (gpm)	Enter Temp (°F)	Leave Temp (°F)
SAAHP-1		DX	Block	7/21 15:40	24.2	289.8	184.3	51.1	194.5	6,644	1,424.5	79.3	77.57	52.9	59.93	N/A	N/A	N/A

*Values do not include effects of plenum loads, heat exchangers such as evaporative cooling devices and similar components.

Heating Coils

Coil Location			Coil Selection at Design					Airflow Conditions at Design				Water Flow Conditions		
System	Zone	Type	Sizing Method	Time of Peak Mo/D/Hr	Total capacity (MBh)	Vent Load (MBh)	Ov/undr sizing (MBh)	Airflow (cfm)	Vent (cfm)	Enter DB (°F)	Leave DB (°F)	Flow (gpm)	Enter Temp (°F)	Leave Temp (°F)
SAAHP-1HEATING		DX	Block	1/21 24:00	289.8	76.8	261.5	6,644	1,424.5	58.9	90.0	N/A	N/A	N/A
SHC-1		Fuel	Block	1/21 24:00	200.1	76.8	61.8	4,483	1,424.5	53.3	90.0	N/A	N/A	N/A
	VRH-1 VAV-1-06	Electric	Peak	1/21 00:20	0.0	0.0	0.0	232	0.0	90.0	95.0	N/A	N/A	N/A
	VRH-1 VAV-1-07	Electric	Peak	1/21 24:00	0.0	0.0	0.0	233	0.0	90.0	95.0	N/A	N/A	N/A
	VRH-1 VAV-1-08	Electric	Peak	1/21 24:00	0.8	0.0	0.5	305	0.0	90.0	95.0	N/A	N/A	N/A
	VRH-1 VAV-1-09	Electric	Peak	1/21 24:00	0.7	0.0	0.7	167	0.0	90.0	95.0	N/A	N/A	N/A
	VRH-1 VAV-1-16	Electric	Peak	1/21 24:00	0.0	0.0	0.0	39	0.0	90.0	95.0	N/A	N/A	N/A
	VRH-1 VAV-1-17	Electric	Peak	1/21 24:00	0.0	0.0	0.0	52	0.0	90.0	95.0	N/A	N/A	N/A
	VRH-1 VAV-1-18	Electric	Peak	1/21 24:00	0.0	0.0	0.0	79	0.0	90.0	95.0	N/A	N/A	N/A
	VRH-1 VAV-1-19	Electric	Peak	1/21 00:20	0.0	0.0	0.0	11	0.0	90.0	95.0	N/A	N/A	N/A
	VRH-1 VAV-1-20	Electric	Peak	1/21 00:20	0.0	0.0	0.0	43	0.0	90.0	95.0	N/A	N/A	N/A
	VRH-1 VAV-1-21	Electric	Peak	1/21 00:20	0.0	0.0	0.0	66	0.0	90.0	95.0	N/A	N/A	N/A
	VRH-1 VAV-1-29	Electric	Peak	1/21 24:00	1.4	0.0	1.4	278	0.0	90.0	95.0	N/A	N/A	N/A

Heating Coils

Coil Location			Coil Selection at Design					Airflow Conditions at Design				Water Flow Conditions		
System	Zone	Type	Sizing Method	Time of Peak Mo/D/Hr	Total capacity (MBh)	Vent Load (MBh)	Ov/undr sizing (MBh)	Airflow (cfm)	Vent (cfm)	Enter DB (°F)	Leave DB (°F)	Flow (gpm)	Enter Temp (°F)	Leave Temp (°F)
	VRH-1 VAV-1-30	Electric	Peak	1/21 24:00	0.0	0.0	0.0	66	0.0	90.0	95.0	N/A	N/A	N/A
	VRH-1 VAV-1-32	Electric	Peak	1/21 24:00	0.0	0.0	0.0	140	0.0	90.0	95.0	N/A	N/A	N/A
	VRH-1 VAV-1-33	Electric	Peak	1/21 24:00	0.6	0.0	0.6	158	0.0	90.0	95.0	N/A	N/A	N/A
	VRH-1 VAV-1-34	Electric	Peak	1/21 24:00	0.0	0.0	0.0	141	0.0	90.0	95.0	N/A	N/A	N/A
	VRH-1 VAV-1-35	Electric	Peak	1/21 24:00	0.0	0.0	0.0	27	0.0	90.0	95.0	N/A	N/A	N/A
	VRH-1 VAV-1-38	Electric	Peak	1/21 24:00	0.0	0.0	0.0	241	0.0	90.0	95.0	N/A	N/A	N/A

Load/Airflows

Location				Cooling			Heating		
System	Zone	Room	Area (ft²)	Time of Peak Mo/D/Hr	Supply Airflow (cfm)	Sensible Load (Btu/h)	Time of Peak Mo/D/Hr	Supply Airflow (cfm)	Sensible Load (Btu/h)
RTU-02			8,073	N/A	6,066	N/A	N/A	2,186	N/A
	VAV-1-06		715	7/21 19:00	2,477	11,887		743	0
		01_151_CONF RM_R02	715	7/21 19:00	2,477	11,994		743	0
	VAV-1-07		716	9/21 19:00	2,477	11,244	1/21 24:00	743	25
		01_152_CONF RM_R02	716	8/21 19:00	2,477	11,264		743	0
	VAV-1-08		652	7/21 17:00	1,101	22,186	1/21 24:00	330	7,867
		01_110A_OPEN OFFICE_R02	652	7/21 17:00	1,101	22,675	1/21 24:00	330	7,928
	VAV-1-09		649	6/21 18:00	553	7,762	1/21 24:00	166	4,310
		01_110A_CORR_R02	215	6/21 17:40	144	1,042	1/21 24:00	43	856
		Room 00-78	434	6/21 18:00	433	6,010	1/21 24:00	130	3,497
	VAV-1-16		70	7/21 17:00	158	3,455	1/21 24:00	47	1,005
		01_145_FOCUS_R02	70	7/21 17:00	154	3,371	1/21 24:00	46	940
	VAV-1-17		146	7/21 17:00	201	4,383	1/21 24:00	60	1,340
		01_140_OFFICE_R02	146	7/21 17:00	201	4,395	1/21 24:00	60	1,334
	VAV-1-18		434	6/21 18:40	845	5,152	1/21 24:00	254	271
		01_150_CONF OVERFLOW_R02	434	7/21 18:40	845	5,219		254	0
	VAV-1-19		170	7/21 18:40	113	714		34	0
		01_141_FURNITURE STOR_R02	170	7/21 18:20	113	716		34	0
	VAV-1-20		194	9/21 16:20	463	2,582		139	0
		01_153_CONF RM_R02	194	8/21 19:00	463	2,642		139	0
	VAV-1-21		214	7/21 19:00	698	4,057		210	0
		01_154_CONF RM_R02	214	7/21 19:00	698	4,137		210	0
	VAV-1-29		1,211	6/21 18:00	1,002	10,139	1/21 24:00	301	7,182
		01_100_LOBBY_R02	562	6/21 18:20	687	5,290	1/21 24:00	206	1,090
		01_101_RECEPTION_R02	125	6/21 18:00	299	2,294	1/21 24:00	90	2,414
		01_103_WAITING AREA_R02	132	6/21 18:00	314	2,266	1/21 24:00	94	2,533
		01_COMM STAIR A_R02	190	7/21 18:40	27	254	1/21 24:00	8	220
		01_COMM STAIR B_R02	201	7/21 18:40	44	211	1/21 24:00	13	355
	VAV-1-30		228	7/21 18:40	708	3,754	1/21 24:00	212	127
		01_144_CONF RM_R02	228	7/21 19:00	708	3,696	1/21 24:00	212	42
	VAV-1-32		590	7/21 15:00	1,224	8,213	1/21 24:00	367	3,618
		01_111_CAF_R02	464	7/21 15:00	1,105	6,479	1/21 24:00	332	3,281
		Room 00-81	126	7/21 15:20	119	1,708	1/21 24:00	36	368

Load/Airflows

Location				Cooling			Heating		
System	Zone	Room	Area (ft²)	Time of Peak Mo/D/Hr	Supply Airflow (cfm)	Sensible Load (Btu/h)	Time of Peak Mo/D/Hr	Supply Airflow (cfm)	Sensible Load (Btu/h)
RTU-02			8,073	N/A	6,066	N/A	N/A	2,186	N/A
	VAV-1-33		601	7/21 14:40	532	6,169	1/21 24:00	160	4,087
		01_111A_CORR_R01	128	7/21 15:00	85	162	1/21 24:00	26	440
		Room 00-80	473	7/21 14:40	453	5,659	1/21 24:00	136	3,655
	VAV-1-34		669	6/21 18:00	1,165	14,909	1/21 24:00	350	3,642
		01_110B_OPEN OFFICE_R02	478	6/21 18:00	986	13,182	1/21 24:00	296	3,266
		Room 00-77	190	6/21 18:20	180	2,429	1/21 24:00	54	362
	VAV-1-35		245	7/21 17:40	163	1,604	1/21 24:00	49	708
		01_140A_CORR_R02	245	7/21 17:40	163	1,519	1/21 24:00	49	561
	VAV-1-38		570	7/21 10:00	1,065	17,738	1/21 24:00	319	6,221
		01_111_OPEN OFFICE_R02	506	7/21 10:00	1,004	16,897	1/21 24:00	301	5,851
		Room 00-79	64	7/21 10:00	65	1,414	1/21 24:00	19	402

Fans

System	Zone	Type	Efficiency (%)	Efficiency with PRM Fan Override (%)	Static Pressure (in. Wg)	Flow Rate (cfm)	Power (W)	Power with PRM Fan Override (kW)	Motor Heat in Air (%)
RTU-02 EXF-1		System	53.00	N/A	3.00	6644	4,390	N/A	100.00
RTU-02 SF-1		System	53.00	N/A	3.00	6644	4,390	N/A	100.00

System Name: RTU-03

System Type:	Variable Air Volume (VAV)
Number of Zones	17
Number of Rooms	36

Component	Quantity
Cooling Coils	1
Heating Coils	19
Fans	3

Cooling Coils

Coil Location			Coil Selection at Design							Airflow Conditions at Design						Water Flow Conditions		
System	Zone	Type	Sizing Method	Time of Peak Mo/D/Hr	Total capacity (tons)	Total capacity (MBh)	Sensible capacity (MBh)	Vent Load (MBh)	Ov/undr sizing (MBh)	Airflow (cfm)	Vent (cfm)	Enter DB/HR (°F)	Enter DB/HR (gr/lb)	Leave DB/HR (°F)	Leave DB/HR (gr/lb)	Flow (gpm)	Enter Temp (°F)	Leave Temp (°F)
SAAHP-1		DX	Block	7/21 15:40	26.5	317.9	222.1	46.6	186.9	8,341	1,194.4	78.1	71.77	52.9	59.93	N/A	N/A	N/A

*Values do not include effects of plenum loads, heat exchangers such as evaporative cooling devices and similar components.

Heating Coils

Coil Location			Coil Selection at Design					Airflow Conditions at Design				Water Flow Conditions		
System	Zone	Type	Sizing Method	Time of Peak Mo/D/Hr	Total capacity (MBh)	Vent Load (MBh)	Ov/undr sizing (MBh)	Airflow (cfm)	Vent (cfm)	Enter DB (°F)	Leave DB (°F)	Flow (gpm)	Enter Temp (°F)	Leave Temp (°F)
SAAHP-1HEATING		DX	Block	1/21 24:00	317.9	68.9	303.7	8,341	1,194.4	62.3	90.0	N/A	N/A	N/A
SHC-1		Fuel	Block	1/21 24:00	170.8	68.9	37.9	3,815	1,194.4	53.2	90.0	N/A	N/A	N/A
	VRH-1 VAV-2-08	Electric	Peak	1/21 24:00	1.8	0.0	0.7	425	0.0	90.0	95.0	N/A	N/A	N/A
	VRH-1 VAV-2-09	Electric	Peak	1/21 24:00	0.0	0.0	0.0	229	0.0	90.0	95.0	N/A	N/A	N/A
	VRH-1 VAV-2-10	Electric	Peak	1/21 24:00	0.0	0.0	0.0	222	0.0	90.0	95.0	N/A	N/A	N/A
	VRH-1 VAV-2-12	Electric	Peak	1/21 24:00	1.2	0.0	0.6	242	0.0	90.0	95.0	N/A	N/A	N/A
	VRH-1 VAV-2-13	Electric	Peak	1/21 24:00	1.3	0.0	0.6	245	0.0	90.0	95.0	N/A	N/A	N/A
	VRH-1 VAV-2-14	Electric	Peak	1/21 24:00	0.0	0.0	0.0	195	0.0	90.0	95.0	N/A	N/A	N/A
	VRH-1 VAV-2-15	Electric	Peak	1/21 24:00	0.0	0.0	0.0	238	0.0	90.0	95.0	N/A	N/A	N/A
	VRH-1 VAV-2-16	Electric	Peak	1/21 24:00	0.0	0.0	0.0	29	0.0	90.0	95.0	N/A	N/A	N/A
	VRH-1 VAV-2-17	Electric	Peak	1/21 24:00	0.0	0.0	0.0	56	0.0	90.0	95.0	N/A	N/A	N/A
	VRH-1 VAV-2-20	Electric	Peak	1/21 24:00	0.0	0.0	0.0	30	0.0	90.0	95.0	N/A	N/A	N/A
	VRH-1 VAV-2-21	Electric	Peak	1/21 24:00	0.0	0.0	0.0	16	0.0	90.0	95.0	N/A	N/A	N/A

Heating Coils

Coil Location			Coil Selection at Design						Airflow Conditions at Design				Water Flow Conditions		
System	Zone	Type	Sizing Method	Time of Peak Mo/D/Hr	Total capacity (MBh)	Vent Load (MBh)	Ov/undr sizing (MBh)	Airflow (cfm)	Vent (cfm)	Enter DB (°F)	Leave DB (°F)	Flow (gpm)	Enter Temp (°F)	Leave Temp (°F)
VRH-1 VAV-2-22		Electric	Peak	1/21 24:00	1.1	0.0	1.1	214	0.0	90.0	95.0	N/A	N/A	N/A
	VRH-1 VAV-2-25	Electric	Peak	1/21 24:00	0.0	0.0	0.0	15	0.0	90.0	95.0	N/A	N/A	N/A
	VRH-1 VAV-2-26	Electric	Peak	1/21 24:00	0.0	0.0	0.0	136	0.0	90.0	95.0	N/A	N/A	N/A
	VRH-1 VAV-2-27	Electric	Peak	1/21 24:00	0.0	0.0	0.0	66	0.0	90.0	95.0	N/A	N/A	N/A
	VRH-1 VAV-2-28	Electric	Peak	1/21 24:00	0.0	0.0	0.0	70	0.0	90.0	95.0	N/A	N/A	N/A
	VRH-1 VAV-2-30	Electric	Peak	1/21 24:00	0.0	0.0	0.0	224	0.0	90.0	95.0	N/A	N/A	N/A

Load/Airflows

Location				Cooling			Heating		
System	Zone	Room	Area (ft²)	Time of Peak Mo/D/Hr	Supply Airflow (cfm)	Sensible Load (Btu/h)	Time of Peak Mo/D/Hr	Supply Airflow (cfm)	Sensible Load (Btu/h)
RTU-03			10,176	N/A	8,218	N/A	N/A	2,544	N/A
	VAV-2-08		1,057	7/21 16:40	1,421	31,054	1/21 24:00	426	10,967
		02_210A_OPEN OFFICE_R04	793	7/21 16:40	1,216	26,490	1/21 24:00	365	9,817
		02_220A_CORRIDOR_R04	194	7/21 17:20	129	2,060	1/21 24:00	39	797
		Room 01-79	71	7/21 17:00	106	2,309	1/21 24:00	32	437
	VAV-2-09		845	6/21 17:40	983	17,265	1/21 24:00	295	5,922
		02_210B_OPEN OFFICE_R04	736	6/21 17:40	880	15,021	1/21 24:00	264	5,526
		Room 01-80	109	6/21 17:40	103	2,202	1/21 24:00	31	590
	VAV-2-10		911	7/21 15:20	1,051	15,590	1/21 24:00	315	5,736
		02_210A_CORRIDOR_R04	133	7/21 16:00	88	613	1/21 24:00	27	636
		02_210C_OPEN OFFICE_R04	778	7/21 15:20	963	15,292	1/21 24:00	289	5,208
	VAV-2-12		432	7/21 09:20	772	10,261	1/21 24:00	232	6,233
		Room 01-89	432	7/21 09:20	798	10,261	1/21 24:00	239	6,444
	VAV-2-13		474	6/21 18:00	784	7,860	1/21 24:00	235	6,328
		02_200_CONF RM_R04	474	6/21 18:00	815	7,861	1/21 24:00	244	6,580
	VAV-2-14		657	7/21 15:00	921	14,819	1/21 24:00	276	5,027
		02_211A_OPEN OFFICE_R04	518	7/21 15:00	790	12,250	1/21 24:00	237	4,411
		Room 01-87	138	7/21 15:40	131	2,561	1/21 24:00	39	781
	VAV-2-15		966	7/21 15:20	1,119	16,528	1/21 24:00	336	6,151
		02_211B_OPEN OFFICE_R04	694	7/21 15:00	907	14,018	1/21 24:00	272	4,988
		02_240A_CORRIDOR_R03	165	7/21 16:40	110	260	1/21 24:00	33	484
		Room 01-88	108	7/21 15:40	102	2,021	1/21 24:00	31	617
	VAV-2-16		290	7/21 17:00	304	4,619	1/21 24:00	91	734
		02_226_OFFICE_R04	142	7/21 17:00	150	2,350	1/21 24:00	45	301
		02_227_OFFICE_R04	148	7/21 17:00	154	2,466	1/21 24:00	46	314
	VAV-2-17		103	7/21 17:00	291	4,793	1/21 24:00	87	1,443
		02_220_HUDDLE_R04	103	7/21 17:00	291	4,861	1/21 24:00	87	1,412
	VAV-2-20		308	7/21 17:00	316	5,141	1/21 24:00	95	501
		02_224_OFFICE_R04	157	7/21 17:00	160	2,683	1/21 24:00	48	57
		02_225_OFFICE_R04	151	7/21 17:00	156	2,410	1/21 24:00	47	294
	VAV-2-21		148	7/21 16:40	154	2,496	1/21 24:00	46	425
		02_236_OFFICE_R04	148	7/21 16:40	154	2,515	1/21 24:00	46	362

Load/Airflows

Location				Cooling			Heating		
System	Zone	Room	Area (ft²)	Time of Peak Mo/D/Hr	Supply Airflow (cfm)	Sensible Load (Btu/h)	Time of Peak Mo/D/Hr	Supply Airflow (cfm)	Sensible Load (Btu/h)
RTU-03			10,176	N/A	8,218	N/A	N/A	2,544	N/A
	VAV-2-22		1,889	7/21 16:40	685	12,273	1/21 24:00	205	5,529
		02_200A_CORRIDOR_R03	459	7/21 17:20	306	1,248	1/21 24:00	92	970
		02_205_WOMEN'S TOILET_R03	258	7/21 17:00	97	2,115	1/21 24:00	29	580
		02_206_MEN'S TOILET_R03	264	7/21 16:40	112	2,440	1/21 24:00	33	603
		02_240A_COMM STAIR_R04	280	7/21 16:40	95	927	1/21 24:00	29	769
		02_240B_COMM STAIR_R04	258	7/21 16:40	87	783	1/21 24:00	26	699
		02_240C_BRIDGE_R04	370	7/21 16:20	247	1,316	1/21 24:00	74	1,496
	VAV-2-25		160	7/21 17:20	106	695	1/21 24:00	32	387
		02_202_STORAGE_R04	160	7/21 17:20	106	695	1/21 24:00	32	337
	VAV-2-26		313	7/21 16:20	1,453	7,086	1/21 24:00	436	745
		02_203_CONF RM_R04	313	7/21 16:40	1,453	7,280	1/21 24:00	436	628
	VAV-2-27		139	7/21 16:20	700	7,321	1/21 24:00	210	494
		02_207_BREAK RM_R03	139	7/21 16:40	700	7,352	1/21 24:00	210	409
	VAV-2-28		567	7/21 17:00	600	9,764	1/21 24:00	180	1,816
		02_232_OFFICE_R04	137	7/21 17:40	147	2,473	1/21 24:00	44	397
		02_233_OFFICE_R04	147	7/21 17:00	154	2,375	1/21 24:00	46	372
		02_234_OFFICE_R04	141	7/21 17:00	150	2,306	1/21 24:00	45	349
		02_235_OFFICE_R04	142	7/21 16:40	150	2,357	1/21 24:00	45	346
	VAV-2-30		917	7/21 09:20	1,056	19,407	1/21 24:00	317	5,790
		02_211A_CORRIDOR_R04	126	7/21 09:40	84	940	1/21 24:00	25	507
		02_211C_OPEN OFFICE_R04	643	7/21 09:00	873	17,199	1/21 24:00	262	4,581
		02_250_CORRIDOR_R03	148	7/21 16:00	98	725	1/21 24:00	30	481

Fans

System	Zone	Type	Efficiency (%)	Efficiency with PRM Fan Override (%)	Static Pressure (in. Wg)	Flow Rate (cfm)	Power (W)	Power with PRM Fan Override (kW)	Motor Heat in Air (%)
RTU-03 EXF-1		System	53.00	N/A	3.00	8341	5,511	N/A	100.00

Fans

System	Zone	Type	Efficiency (%)	Efficiency with PRM Fan Override (%)	Static Pressure (in. Wg)	Flow Rate (cfm)	Power (W)	Power with PRM Fan Override (kW)	Motor Heat in Air (%)
RTU-03 SF-1		System	53.00	N/A	3.00	8341	5,511	N/A	100.00
VAV-2-22 _EXHAUST FAN		Zone	10.00	N/A	0.00	1044	0	N/A	100.00

System Name: DSS_05

System Type:	Constant Volume (CV)
Number of Zones	2
Number of Rooms	2

Component	Quantity
Cooling Coils	2
Heating Coils	2
Fans	2

Cooling Coils

Coil Location			Coil Selection at Design							Airflow Conditions at Design						Water Flow Conditions		
System	Zone	Type	Sizing Method	Time of Peak Mo/D/Hr	Total capacity (tons)	Total capacity (MBh)	Sensible capacity (MBh)	Vent Load (MBh)	Ov/undr sizing (MBh)	Airflow (cfm)	Vent (cfm)	Enter DB/HR (°F)	Enter DB/HR (gr/lb)	Leave DB/HR (°F)	Leave DB/HR (gr/lb)	Flow (gpm)	Enter Temp (°F)	Leave Temp (°F)
DSS Zone 00-25		DX	Peak	7/21 09:20	1.0	12.5	11.0	0.0	-1.8	375	0.0	81.4	62.85	53.5	61.44	N/A	N/A	N/A
DSS Zone 01-07		DX	Peak	7/21 11:20	0.2	2.4	2.1	0.0	-0.3	65	0.0	83.8	62.85	53.5	61.44	N/A	N/A	N/A

*Values do not include effects of plenum loads, heat exchangers such as evaporative cooling devices and similar components.

Heating Coils

Coil Location			Coil Selection at Design					Airflow Conditions at Design				Water Flow Conditions		
System	Zone	Type	Sizing Method	Time of Peak Mo/D/Hr	Total capacity (MBh)	Vent Load (MBh)	Ov/undr sizing (MBh)	Airflow (cfm)	Vent (cfm)	Enter DB (°F)	Leave DB (°F)	Flow (gpm)	Enter Temp (°F)	Leave Temp (°F)
DSS Zone 00-25		Electric	Peak	1/21 24:00	11.1	0.0	3.1	375	0.0	70.0	95.0	N/A	N/A	N/A
DSS Zone 01-07		Electric	Peak	1/21 24:00	1.9	0.0	0.1	65	0.0	70.0	95.0	N/A	N/A	N/A

Load/Airflows

Location				Cooling			Heating		
System	Zone	Room	Area (ft²)	Time of Peak Mo/D/Hr	Supply Airflow (cfm)	Sensible Load (Btu/h)	Time of Peak Mo/D/Hr	Supply Airflow (cfm)	Sensible Load (Btu/h)
DSS_05			468	N/A	0	N/A	N/A	0	N/A
	Zone 00-25		226	7/21 09:20	375	10,660	1/21 24:00	375	6,537
		01_STAIR 2	226	7/21 09:20	375	10,669	1/21 24:00	375	6,296
	Zone 01-07		242	7/21 11:20	65	1,610	1/21 24:00	65	1,762
		02_STAIR 2	242	7/21 11:20	62	1,667	1/21 24:00	62	1,666

Fans

System	Zone	Type	Efficiency (%)	Efficiency with PRM Fan Override (%)	Static Pressure (in. Wg)	Flow Rate (cfm)	Power (W)	Power with PRM Fan Override (kW)	Motor Heat in Air (%)
Zone 00-25 _DSS_05 SF-1		System	78.00	N/A	3.00	375	169	N/A	100.00
Zone 01-07 _DSS_05 SF-1		System	78.00	N/A	3.00	65	29	N/A	100.00

System Name: DSS_07

System Type:	Constant Volume (CV)
Number of Zones	2
Number of Rooms	2

Component	Quantity
Cooling Coils	2
Heating Coils	2
Fans	2

Cooling Coils

Coil Location			Coil Selection at Design							Airflow Conditions at Design						Water Flow Conditions		
System	Zone	Type	Sizing Method	Time of Peak Mo/D/Hr	Total capacity (tons)	Total capacity (MBh)	Sensible capacity (MBh)	Vent Load (MBh)	Ov/undr sizing (MBh)	Airflow (cfm)	Vent (cfm)	Enter DB/HR (°F)	Enter DB/HR (gr/lb)	Leave DB/HR (°F)	Leave DB/HR (gr/lb)	Flow (gpm)	Enter Temp (°F)	Leave Temp (°F)
DSS Zone 01-08		DX	Peak	7/21 16:40	0.3	4.0	3.5	0.0	-0.6	121	0.0	81.3	62.85	53.5	61.44	N/A	N/A	N/A
DSS Zone 01-09		DX	Peak	7/21 17:00	0.1	0.6	0.6	0.0	-0.1	18	0.0	83.5	62.85	53.5	61.44	N/A	N/A	N/A

*Values do not include effects of plenum loads, heat exchangers such as evaporative cooling devices and similar components.

Heating Coils

Coil Location			Coil Selection at Design					Airflow Conditions at Design				Water Flow Conditions		
System	Zone	Type	Sizing Method	Time of Peak Mo/D/Hr	Total capacity (MBh)	Vent Load (MBh)	Ov/undr sizing (MBh)	Airflow (cfm)	Vent (cfm)	Enter DB (°F)	Leave DB (°F)	Flow (gpm)	Enter Temp (°F)	Leave Temp (°F)
DSS Zone 01-08		Electric	Peak	1/21 00:20	2.0	0.0	2.0	121	0.0	81.0	95.0	N/A	N/A	N/A
DSS Zone 01-09		Electric	Peak	1/21 24:00	0.5	0.0	0.5	18	0.0	70.0	95.0	N/A	N/A	N/A

Load/Airflows

Location				Cooling			Heating		
System	Zone	Room	Area (ft²)	Time of Peak Mo/D/Hr	Supply Airflow (cfm)	Sensible Load (Btu/h)	Time of Peak Mo/D/Hr	Supply Airflow (cfm)	Sensible Load (Btu/h)
DSS_07			202	N/A	0	N/A	N/A	0	N/A
	Zone 01-08		96	7/21 16:40	121	3,431		121	0
		02_250_ELEC	96	7/21 16:40	124	3,527		124	0
	Zone 01-09		106	7/21 17:00	18	518	1/21 24:00	18	86
		02_251_TELECOM	106	7/21 17:00	18	518	1/21 24:00	18	12

Fans

System	Zone	Type	Efficiency (%)	Efficiency with PRM Fan Override (%)	Static Pressure (in. Wg)	Flow Rate (cfm)	Power (W)	Power with PRM Fan Override (kW)	Motor Heat in Air (%)
Zone 01-08 _DSS_07 SF-1		System	78.00	N/A	3.00	121	54	N/A	100.00
Zone 01-09 _DSS_07 SF-1		System	78.00	N/A	3.00	18	8	N/A	100.00

System Name: RTU-04

System Type:	Variable Air Volume (VAV)
Number of Zones	14
Number of Rooms	28

Component	Quantity
Cooling Coils	1
Heating Coils	16
Fans	2

Cooling Coils

Coil Location			Coil Selection at Design							Airflow Conditions at Design						Water Flow Conditions		
System	Zone	Type	Sizing Method	Time of Peak Mo/D/Hr	Total capacity (tons)	Total capacity (MBh)	Sensible capacity (MBh)	Vent Load (MBh)	Ov/undr sizing (MBh)	Airflow (cfm)	Vent (cfm)	Enter DB/HR (°F)	Enter DB/HR (gr/lb)	Leave DB/HR (°F)	Leave DB/HR (gr/lb)	Flow (gpm)	Enter Temp (°F)	Leave Temp (°F)
SAAHP-1		DX	Block	8/21 14:00	29.2	350.0	250.1	45.7	184.2	9,548	1,207.1	77.7	70.45	52.9	59.93	N/A	N/A	N/A

*Values do not include effects of plenum loads, heat exchangers such as evaporative cooling devices and similar components.

Heating Coils

Coil Location			Coil Selection at Design					Airflow Conditions at Design				Water Flow Conditions		
System	Zone	Type	Sizing Method	Time of Peak Mo/D/Hr	Total capacity (MBh)	Vent Load (MBh)	Ov/undr sizing (MBh)	Airflow (cfm)	Vent (cfm)	Enter DB (°F)	Leave DB (°F)	Flow (gpm)	Enter Temp (°F)	Leave Temp (°F)
SAAHP-1HEATING		DX	Block	1/21 24:00	350.0	69.7	350.0	9,548	1,207.1	63.2	90.0	N/A	N/A	N/A
SHC-1		Fuel	Block	1/21 24:00	164.2	69.7	32.8	3,489	1,207.1	51.5	90.0	N/A	N/A	N/A
	VRH-1 VAV-2-01	Electric	Peak	1/21 24:00	0.9	0.0	0.9	433	0.0	90.0	95.0	N/A	N/A	N/A
	VRH-1 VAV-2-02	Electric	Peak	1/21 24:00	0.0	0.0	0.0	226	0.0	90.0	95.0	N/A	N/A	N/A
	VRH-1 VAV-2-03	Electric	Peak	1/21 24:00	0.0	0.0	0.0	223	0.0	90.0	95.0	N/A	N/A	N/A
	VRH-1 VAV-2-04	Electric	Peak	1/21 24:00	0.0	0.0	0.0	272	0.0	90.0	95.0	N/A	N/A	N/A
	VRH-1 VAV-2-05	Electric	Peak	1/21 24:00	0.0	0.0	0.0	220	0.0	90.0	95.0	N/A	N/A	N/A
	VRH-1 VAV-2-06	Electric	Peak	1/21 24:00	0.0	0.0	0.0	238	0.0	90.0	95.0	N/A	N/A	N/A
	VRH-1 VAV-2-07	Electric	Peak	1/21 24:00	1.1	0.0	1.0	398	0.0	90.0	95.0	N/A	N/A	N/A
	VRH-1 VAV-2-11	Electric	Peak	1/21 24:00	0.0	0.0	0.0	48	0.0	90.0	95.0	N/A	N/A	N/A
	VRH-1 VAV-2-18	Electric	Peak	1/21 24:00	0.0	0.0	0.0	71	0.0	90.0	95.0	N/A	N/A	N/A
	VRH-1 VAV-2-19	Electric	Peak	1/21 24:00	0.0	0.0	0.0	37	0.0	90.0	95.0	N/A	N/A	N/A
	VRH-1 VAV-2-23	Electric	Peak	1/21 24:00	0.0	0.0	0.0	26	0.0	90.0	95.0	N/A	N/A	N/A

Heating Coils

Coil Location			Coil Selection at Design					Airflow Conditions at Design				Water Flow Conditions		
System	Zone	Type	Sizing Method	Time of Peak Mo/D/Hr	Total capacity (MBh)	Vent Load (MBh)	Ov/undr sizing (MBh)	Airflow (cfm)	Vent (cfm)	Enter DB (°F)	Leave DB (°F)	Flow (gpm)	Enter Temp (°F)	Leave Temp (°F)
	VRH-1 VAV-2-24	Electric	Peak	1/21 24:00	0.0	0.0	0.0	29	0.0	90.0	95.0	N/A	N/A	N/A
	VRH-1 VAV-2-29	Electric	Peak	1/21 24:00	0.0	0.0	0.0	20	0.0	90.0	95.0	N/A	N/A	N/A
	VRH-1 VAV-2-31	Electric	Peak	1/21 24:00	0.0	0.0	0.0	44	0.0	90.0	95.0	N/A	N/A	N/A

Load/Airflows

Location				Cooling			Heating		
System	Zone	Room	Area (ft²)	Time of Peak Mo/D/Hr	Supply Airflow (cfm)	Sensible Load (Btu/h)	Time of Peak Mo/D/Hr	Supply Airflow (cfm)	Sensible Load (Btu/h)
RTU-04			8,470	N/A	9,548	N/A	N/A	2,191	N/A
	VAV-2-01		1,005	9/21 15:20	1,594	34,826	1/21 24:00	478	11,182
		02_230A_OPEN OFFICE_R03	846	9/21 15:20	1,480	32,339	1/21 24:00	444	10,029
		Room 01-81	159	8/21 16:20	192	4,205	1/21 24:00	58	1,244
	VAV-2-02		806	10/21 13:20	1,184	25,433	1/21 24:00	355	5,826
		02_230B_OPEN OFFICE_R03	678	10/21 13:20	1,063	22,776	1/21 24:00	319	5,246
		Room 01-82	127	10/21 14:20	124	2,706	1/21 24:00	37	663
	VAV-2-03		940	10/21 13:00	1,238	24,208	1/21 24:00	371	5,765
		02_230A_CORRIDOR_R03	149	10/21 13:40	99	1,047	1/21 24:00	30	680
		02_230C_OPEN OFFICE_R03	792	10/21 13:00	1,139	23,681	1/21 24:00	342	5,192
	VAV-2-04		1,335	9/21 13:00	1,724	30,677	1/21 24:00	517	7,018
		02_230D_OPEN OFFICE_R03	1,132	10/21 13:00	1,533	26,789	1/21 24:00	460	6,108
		Room 01-83	83	10/21 13:40	80	1,744	1/21 24:00	24	385
		Room 01-84	120	9/21 13:40	114	2,150	1/21 24:00	34	528
	VAV-2-05		920	10/21 13:00	1,263	26,191	1/21 24:00	379	5,690
		02_230E_OPEN OFFICE_R03	782	10/21 13:00	1,132	23,376	1/21 24:00	340	5,184
		Room 01-85	139	10/21 13:40	131	2,753	1/21 24:00	39	673
	VAV-2-06		921	10/21 13:00	1,225	24,220	1/21 24:00	368	6,143
		02_230B_CORRIDOR_R03	139	9/21 13:40	93	1,008	1/21 24:00	28	735
		02_230F_OPEN OFFICE_R03	783	10/21 13:00	1,133	24,059	1/21 24:00	340	5,683
	VAV-2-07		897	9/21 10:00	1,420	31,013	1/21 24:00	426	10,269
		02_230G_OPEN OFFICE_R03	762	9/21 10:00	1,268	27,705	1/21 24:00	381	9,503
		Room 01-86	135	8/21 10:20	151	3,300	1/21 24:00	45	1,111
	VAV-2-11		70	8/21 16:20	226	4,942	1/21 24:00	68	1,243
		02_231_BREAKOUT_R03	70	7/21 16:40	193	4,214	1/21 24:00	58	1,077
	VAV-2-18		580	7/21 16:40	609	9,143	1/21 24:00	183	1,833
		02_240_OFFICE_R03	147	7/21 16:40	154	2,230	1/21 24:00	46	390
		02_241_OFFICE_R03	144	7/21 17:00	152	2,158	1/21 24:00	46	350
		02_246_OFFICE_R03	142	7/21 17:00	150	2,284	1/21 24:00	45	279
		02_247_OFFICE_R03	147	7/21 16:20	154	2,377	1/21 24:00	46	381
	VAV-2-19		291	7/21 16:40	305	4,699	1/21 24:00	92	955
		02_243_OFFICE_R03	142	7/21 17:00	150	2,237	1/21 24:00	45	364
		02_244_OFFICE_R03	149	7/21 16:40	155	2,391	1/21 24:00	46	431

Load/Airflows

Location				Cooling			Heating		
System	Zone	Room	Area (ft²)	Time of Peak Mo/D/Hr	Supply Airflow (cfm)	Sensible Load (Btu/h)	Time of Peak Mo/D/Hr	Supply Airflow (cfm)	Sensible Load (Btu/h)
RTU-04			8,470	N/A	9,548	N/A	N/A	2,191	N/A
	VAV-2-23		195	7/21 16:40	199	2,833	1/21 24:00	60	663
		02_231_STORAGE_R03	48	7/21 17:20	45	602	1/21 24:00	14	169
		02_237_OFFICE_R03	147	7/21 16:40	154	2,227	1/21 24:00	46	384
	VAV-2-24		286	7/21 16:40	302	4,566	1/21 24:00	91	735
		02_242_OFFICE_R03	147	7/21 17:00	153	2,177	1/21 24:00	46	352
		02_245_OFFICE_R03	140	7/21 16:40	149	2,421	1/21 24:00	45	171
	VAV-2-29		152	7/21 16:00	157	2,529	1/21 24:00	47	519
		02_248_OFFICE_R03	152	7/21 16:20	157	2,532	1/21 24:00	47	389
	VAV-2-31		71	8/21 09:00	183	3,997	1/21 24:00	55	1,124
		02_252_BREAKOUT_R03	71	7/21 09:00	154	3,372	1/21 24:00	46	978

Fans

System	Zone	Type	Efficiency (%)	Efficiency with PRM Fan Override (%)	Static Pressure (in. Wg)	Flow Rate (cfm)	Power (W)	Power with PRM Fan Override (kW)	Motor Heat in Air (%)
RTU-04 EXF-1		System	53.00	N/A	3.00	9548	6,309	N/A	100.00
RTU-04 SF-1		System	53.00	N/A	3.00	9548	6,309	N/A	100.00

System Name: DSS_06

System Type:	Constant Volume (CV)
Number of Zones	1
Number of Rooms	1

Component	Quantity
Cooling Coils	1
Heating Coils	1
Fans	1

Cooling Coils

Coil Location			Coil Selection at Design							Airflow Conditions at Design						Water Flow Conditions		
System	Zone	Type	Sizing Method	Time of Peak Mo/D/Hr	Total capacity (tons)	Total capacity (MBh)	Sensible capacity (MBh)	Vent Load (MBh)	Ov/undr sizing (MBh)	Airflow (cfm)	Vent (cfm)	Enter DB/HR (°F)	Enter DB/HR (gr/lb)	Leave DB/HR (°F)	Leave DB/HR (gr/lb)	Flow (gpm)	Enter Temp (°F)	Leave Temp (°F)
DSS Zone 01-29		DX	Peak	7/21 16:20	0.3	3.4	2.5	0.8	-0.3	74	22.1	86.3	73.84	53.5	61.44	N/A	N/A	N/A

*Values do not include effects of plenum loads, heat exchangers such as evaporative cooling devices and similar components.

Heating Coils

Coil Location			Coil Selection at Design					Airflow Conditions at Design				Water Flow Conditions		
System	Zone	Type	Sizing Method	Time of Peak Mo/D/Hr	Total capacity (MBh)	Vent Load (MBh)	Ov/undr sizing (MBh)	Airflow (cfm)	Vent (cfm)	Enter DB (°F)	Leave DB (°F)	Flow (gpm)	Enter Temp (°F)	Leave Temp (°F)
DSS Zone 01-29		Electric	Peak	1/21 24:00	3.7	1.3	3.7	74	22.1	53.9	95.0	N/A	N/A	N/A

Load/Airflows

Location				Cooling			Heating		
System	Zone	Room	Area (ft²)	Time of Peak Mo/D/Hr	Supply Airflow (cfm)	Sensible Load (Btu/h)	Time of Peak Mo/D/Hr	Supply Airflow (cfm)	Sensible Load (Btu/h)
DSS_06			368	N/A	0	N/A	N/A	0	N/A
	Zone 01-29		368	7/21 17:20	74	1,536	1/21 24:00	74	729
		02_223_LAN/IT RM_R04	368	7/21 17:00	74	1,499	1/21 24:00	74	574

Fans

System	Zone	Type	Efficiency (%)	Efficiency with PRM Fan Override (%)	Static Pressure (in. Wg)	Flow Rate (cfm)	Power (W)	Power with PRM Fan Override (kW)	Motor Heat in Air (%)
Zone 01-29 _DSS_06 SF-1		System	78.00	N/A	3.00	74	33	N/A	100.00

System Name: DSS_08

System Type:	Constant Volume (CV)
Number of Zones	1
Number of Rooms	1

Component	Quantity
Cooling Coils	1
Heating Coils	1
Fans	1

Cooling Coils

Coil Location			Coil Selection at Design							Airflow Conditions at Design						Water Flow Conditions		
System	Zone	Type	Sizing Method	Time of Peak Mo/D/Hr	Total capacity (tons)	Total capacity (MBh)	Sensible capacity (MBh)	Vent Load (MBh)	Ov/undr sizing (MBh)	Airflow (cfm)	Vent (cfm)	Enter DB/HR (°F)	Enter DB/HR (gr/lb)	Leave DB/HR (°F)	Leave DB/HR (gr/lb)	Flow (gpm)	Enter Temp (°F)	Leave Temp (°F)
DSS Zone 01-27		DX	Peak	7/21 17:40	0.4	4.3	3.8	0.0	-0.5	130	0.0	81.3	62.85	53.5	61.44	N/A	N/A	N/A

*Values do not include effects of plenum loads, heat exchangers such as evaporative cooling devices and similar components.

Heating Coils

Coil Location			Coil Selection at Design					Airflow Conditions at Design				Water Flow Conditions		
System	Zone	Type	Sizing Method	Time of Peak Mo/D/Hr	Total capacity (MBh)	Vent Load (MBh)	Ov/undr sizing (MBh)	Airflow (cfm)	Vent (cfm)	Enter DB (°F)	Leave DB (°F)	Flow (gpm)	Enter Temp (°F)	Leave Temp (°F)
DSS Zone 01-27		Electric	Peak	1/21 00:20	2.1	0.0	2.1	130	0.0	81.0	95.0	N/A	N/A	N/A

Load/Airflows

Location				Cooling			Heating		
System	Zone	Room	Area (ft²)	Time of Peak Mo/D/Hr	Supply Airflow (cfm)	Sensible Load (Btu/h)	Time of Peak Mo/D/Hr	Supply Airflow (cfm)	Sensible Load (Btu/h)
DSS_08			105	N/A	0	N/A	N/A	0	N/A
	Zone 01-27		105	7/21 17:40	130	3,681		130	0
		02_221_ELC	105	7/21 17:40	127	3,618		127	0

Fans

System	Zone	Type	Efficiency (%)	Efficiency with PRM Fan Override (%)	Static Pressure (in. Wg)	Flow Rate (cfm)	Power (W)	Power with PRM Fan Override (kW)	Motor Heat in Air (%)
Zone 01-27 _DSS_08 SF-1		System	78.00	N/A	3.00	130	58	N/A	100.00

System Name: DSS_04

System Type:	Constant Volume (CV)
Number of Zones	2
Number of Rooms	2

Component	Quantity
Cooling Coils	2
Heating Coils	2
Fans	2

Cooling Coils

Coil Location			Coil Selection at Design							Airflow Conditions at Design						Water Flow Conditions		
System	Zone	Type	Sizing Method	Time of Peak Mo/D/Hr	Total capacity (tons)	Total capacity (MBh)	Sensible capacity (MBh)	Vent Load (MBh)	Ov/undr sizing (MBh)	Airflow (cfm)	Vent (cfm)	Enter DB/HR (°F)	Enter DB/HR (gr/lb)	Leave DB/HR (°F)	Leave DB/HR (gr/lb)	Flow (gpm)	Enter Temp (°F)	Leave Temp (°F)
DSS Zone 00-27		DX	Peak	7/21 19:00	0.0	0.6	0.5	0.0	-0.1	16	0.0	84.0	62.85	53.5	61.44	N/A	N/A	N/A
DSS Zone 00-28		DX	Peak	7/21 19:00	0.3	4.1	3.6	0.0	-0.6	122	0.0	81.4	62.85	53.5	61.44	N/A	N/A	N/A

*Values do not include effects of plenum loads, heat exchangers such as evaporative cooling devices and similar components.

Heating Coils

Coil Location			Coil Selection at Design					Airflow Conditions at Design				Water Flow Conditions		
System	Zone	Type	Sizing Method	Time of Peak Mo/D/Hr	Total capacity (MBh)	Vent Load (MBh)	Ov/undr sizing (MBh)	Airflow (cfm)	Vent (cfm)	Enter DB (°F)	Leave DB (°F)	Flow (gpm)	Enter Temp (°F)	Leave Temp (°F)
DSS Zone 00-27		Electric	Peak	1/21 00:20	0.4	0.0	0.4	16	0.0	73.1	95.0	N/A	N/A	N/A
DSS Zone 00-28		Electric	Peak	1/21 00:20	2.0	0.0	2.0	122	0.0	81.0	95.0	N/A	N/A	N/A

Load/Airflows

Location				Cooling			Heating		
System	Zone	Room	Area (ft²)	Time of Peak Mo/D/Hr	Supply Airflow (cfm)	Sensible Load (Btu/h)	Time of Peak Mo/D/Hr	Supply Airflow (cfm)	Sensible Load (Btu/h)
DSS_04			233	N/A	0	N/A	N/A	0	N/A
	Zone 00-27		121	7/21 19:00	16	459		16	0
		01_143_TELECOM	121	7/21 19:00	16	460		16	0
	Zone 00-28		112	7/21 19:00	122	3,479		122	0
		01_142_ELEC	112	7/21 19:00	123	3,490		123	0

Fans

System	Zone	Type	Efficiency (%)	Efficiency with PRM Fan Override (%)	Static Pressure (in. Wg)	Flow Rate (cfm)	Power (W)	Power with PRM Fan Override (kW)	Motor Heat in Air (%)
Zone 00-27	_DSS_04 SF-1	System	78.00	N/A	3.00	16	7	N/A	100.00
Zone 00-28	_DSS_04 SF-1	System	78.00	N/A	3.00	122	55	N/A	100.00

System Name: DSS_02

System Type:	Constant Volume (CV)
Number of Zones	2
Number of Rooms	2

Component	Quantity
Cooling Coils	2
Heating Coils	2
Fans	2

Cooling Coils

Coil Location			Coil Selection at Design							Airflow Conditions at Design						Water Flow Conditions		
System	Zone	Type	Sizing Method	Time of Peak Mo/D/Hr	Total capacity (tons)	Total capacity (MBh)	Sensible capacity (MBh)	Vent Load (MBh)	Ov/undr sizing (MBh)	Airflow (cfm)	Vent (cfm)	Enter DB/HR (°F)	Enter DB/HR (gr/lb)	Leave DB/HR (°F)	Leave DB/HR (gr/lb)	Flow (gpm)	Enter Temp (°F)	Leave Temp (°F)
DSS Zone 00-26		DX	Peak	7/21 17:00	1.2	14.9	13.1	0.0	-1.5	449	0.0	81.3	62.85	53.5	61.44	N/A	N/A	N/A
DSS Zone 01-28		DX	Peak	7/21 16:40	2.2	26.6	23.4	0.0	-3.3	805	0.0	81.2	62.85	53.5	61.44	N/A	N/A	N/A

*Values do not include effects of plenum loads, heat exchangers such as evaporative cooling devices and similar components.

Heating Coils

Coil Location			Coil Selection at Design					Airflow Conditions at Design				Water Flow Conditions		
System	Zone	Type	Sizing Method	Time of Peak Mo/D/Hr	Total capacity (MBh)	Vent Load (MBh)	Ov/undr sizing (MBh)	Airflow (cfm)	Vent (cfm)	Enter DB (°F)	Leave DB (°F)	Flow (gpm)	Enter Temp (°F)	Leave Temp (°F)
DSS Zone 00-26		Electric	Peak	1/21 24:00	13.2	0.0	4.9	449	0.0	70.0	95.0	N/A	N/A	N/A
DSS Zone 01-28		Electric	Peak	1/21 24:00	23.7	0.0	14.2	805	0.0	70.0	95.0	N/A	N/A	N/A

Load/Airflows

Location				Cooling			Heating		
System	Zone	Room	Area (ft²)	Time of Peak Mo/D/Hr	Supply Airflow (cfm)	Sensible Load (Btu/h)	Time of Peak Mo/D/Hr	Supply Airflow (cfm)	Sensible Load (Btu/h)
DSS_02			444	N/A	0	N/A	N/A	0	N/A
	Zone 00-26		227	7/21 17:00	449	12,772	1/21 24:00	449	6,963
		01_STAIR 1	227	7/21 17:00	449	12,769	1/21 24:00	449	6,902
	Zone 01-28		217	7/21 16:40	805	22,865	1/21 24:00	805	7,996
		02_STAIR 1	217	7/21 16:40	798	22,680	1/21 24:00	798	7,746

Fans

System	Zone	Type	Efficiency (%)	Efficiency with PRM Fan Override (%)	Static Pressure (in. Wg)	Flow Rate (cfm)	Power (W)	Power with PRM Fan Override (kW)	Motor Heat in Air (%)
Zone 00-26 _DSS_02 SF-1		System	78.00	N/A	3.00	449	202	N/A	100.00
Zone 01-28 _DSS_02 SF-1		System	78.00	N/A	3.00	805	363	N/A	100.00

System Name: DSS_09

System Type:	Constant Volume (CV)
Number of Zones	1
Number of Rooms	1

Component	Quantity
Cooling Coils	1
Heating Coils	1
Fans	1

Cooling Coils

Coil Location			Coil Selection at Design							Airflow Conditions at Design						Water Flow Conditions		
System	Zone	Type	Sizing Method	Time of Peak Mo/D/Hr	Total capacity (tons)	Total capacity (MBh)	Sensible capacity (MBh)	Vent Load (MBh)	Ov/undr sizing (MBh)	Airflow (cfm)	Vent (cfm)	Enter DB/HR (°F)	Enter DB/HR (gr/lb)	Leave DB/HR (°F)	Leave DB/HR (gr/lb)	Flow (gpm)	Enter Temp (°F)	Leave Temp (°F)
DSS Zone 00-22		DX	Peak	9/21 15:00	0.2	2.9	2.5	0.0	-0.3	86	0.0	81.9	62.85	53.5	61.44	N/A	N/A	N/A

*Values do not include effects of plenum loads, heat exchangers such as evaporative cooling devices and similar components.

Heating Coils

Coil Location			Coil Selection at Design					Airflow Conditions at Design				Water Flow Conditions		
System	Zone	Type	Sizing Method	Time of Peak Mo/D/Hr	Total capacity (MBh)	Vent Load (MBh)	Ov/undr sizing (MBh)	Airflow (cfm)	Vent (cfm)	Enter DB (°F)	Leave DB (°F)	Flow (gpm)	Enter Temp (°F)	Leave Temp (°F)
DSS Zone 00-22		Electric	Peak	1/21 24:00	2.5	0.0	0.8	86	0.0	70.0	95.0	N/A	N/A	N/A

Load/Airflows

Location				Cooling			Heating		
System	Zone	Room	Area (ft²)	Time of Peak Mo/D/Hr	Supply Airflow (cfm)	Sensible Load (Btu/h)	Time of Peak Mo/D/Hr	Supply Airflow (cfm)	Sensible Load (Btu/h)
DSS_09			167	N/A	0	N/A	N/A	0	N/A
	Zone 00-22		167	9/21 15:00	86	2,431	1/21 24:00	86	1,878
		01_131_SPRINKLER RM_R01	167	9/21 15:00	86	2,431	1/21 24:00	86	1,915

Fans

System	Zone	Type	Efficiency (%)	Efficiency with PRM Fan Override (%)	Static Pressure (in. Wg)	Flow Rate (cfm)	Power (W)	Power with PRM Fan Override (kW)	Motor Heat in Air (%)
Zone 00-22 _DSS_09 SF-1		System	78.00	N/A	3.00	86	39	N/A	100.00

Simulation Peak : Cooling Coil Name : RTU-01 SAAHP-1

System Name :	RTU-01	
Time of Peak :	August 21 15:00	
Coil Air Flow :	7407	(cfm)
Coil Capacity :	124	(MBh)
Coil Capacity Difference	-160.12	(MBh)

Zone Space Sensible Loads	-113.3	(MBh)
Outdoor Air Flow Rate	1131	(cfm)
Percent Outdoor Air	15	%
Air Specific Heat	0.2438	(Btu/lb·°F)
Air Density	0.0747	(lb/ft³)

*Value has been adjusted for elevation

	DryBulb (°F)	Humidity Ratio (gr/lb)	Relative Humidity %	Temperature Difference (°F)
Zone	103.8	119.6	36.7	
Return Air	105.1	119.7		
Outdoor Air	90.3	96.6		
Entering Coil	102.9	116.2		
Leaving Coil	88	115.9		
Supply Fan				2.16

Ideal Loads Peak : Cooling Coil Name : RTU-01 SAAHP-1

System Name :	RTU-01	
Time of Peak :	August 21 14:00	
Coil Air Flow :	7407	(cfm)
Coil Capacity :	284	(MBh)
Coil Capacity Difference	-160.12	(MBh)

Zone Space Sensible Loads	157.4	(MBh)
Outdoor Air Flow Rate	1123	(cfm)
Percent Outdoor Air	15.26	%
Air Specific Heat	0.2438	(Btu/lb·°F)
Air Density	0.0747	(lb/ft³)

*Value has been adjusted for elevation

	DryBulb (°F)	Humidity Ratio (gr/lb)	Relative Humidity %	Temperature Difference (°F)
Zone	75	67.2	51.4	
Return Air	76.4	67.2		
Outdoor Air	90.3	96.6		
Entering Coil	78.5	71.4		
Leaving Coil	52.9	60.2		
Supply Fan				1.98

Simulation Peak : Cooling Coil Name : RTU-02 SAAHP-1

System Name :	RTU-02	**Zone Space Sensible Loads**	-90.9 (MBh)
Time of Peak :	July 21 15:00	**Outdoor Air Flow Rate**	1424 (cfm)
Coil Air Flow :	6644 (cfm)	**Percent Outdoor Air**	21 %
Coil Capacity :	95 (MBh)	**Air Specific Heat**	0.2438 (Btu/lb·°F)
Coil Capacity Difference	-194.55 (MBh)	**Air Density**	0.0747 (lb/ft³)

*Value has been adjusted for elevation

	DryBulb (°F)	Humidity Ratio (gr/lb)	Relative Humidity %	Temperature Difference (°F)
Zone	102.3	134	42.8	
Return Air	103.5	134		
Outdoor Air	90.7	99.5		
Entering Coil	100.7	126.6		
Leaving Coil	88	126.4		
Supply Fan				2.16

Ideal Loads Peak : Cooling Coil Name : RTU-02 SAAHP-1

System Name :	RTU-02	**Zone Space Sensible Loads**	131.7 (MBh)
Time of Peak :	July 21 15:20	**Outdoor Air Flow Rate**	1420 (cfm)
Coil Air Flow :	6644 (cfm)	**Percent Outdoor Air**	21.44 %
Coil Capacity :	290 (MBh)	**Air Specific Heat**	0.2438 (Btu/lb·°F)
Coil Capacity Difference	-194.55 (MBh)	**Air Density**	0.0747 (lb/ft³)

*Value has been adjusted for elevation

	DryBulb (°F)	Humidity Ratio (gr/lb)	Relative Humidity %	Temperature Difference (°F)
Zone	75.1	71.4	54.8	
Return Air	76.4	71.4		
Outdoor Air	89.9	99.4		
Entering Coil	79.3	77.7		
Leaving Coil	52.9	60.2		
Supply Fan				1.98

Simulation Peak : Cooling Coil Name : RTU-03 SAAHP-1

System Name :	RTU-03	
Time of Peak :	July 21 16:00	
Coil Air Flow :	8341	(cfm)
Coil Capacity :	131	(MBh)
Coil Capacity Difference	-186.94	(MBh)

Zone Space Sensible Loads	-120.6	(MBh)
Outdoor Air Flow Rate	1194	(cfm)
Percent Outdoor Air	14	%
Air Specific Heat	0.2438	(Btu/lb·°F)
Air Density	0.0747	(lb/ft³)

*Value has been adjusted for elevation

	DryBulb (°F)	Humidity Ratio (gr/lb)	Relative Humidity %	Temperature Difference (°F)
Zone	103	126.2	39.5	
Return Air	104	126.4		
Outdoor Air	89.4	99.5		
Entering Coil	101.9	122.5		
Leaving Coil	88	122.3		
Supply Fan				2.16

Ideal Loads Peak : Cooling Coil Name : RTU-03 SAAHP-1

System Name :	RTU-03	
Time of Peak :	July 21 15:40	
Coil Air Flow :	8341	(cfm)
Coil Capacity :	318	(MBh)
Coil Capacity Difference	-186.94	(MBh)

Zone Space Sensible Loads	175.9	(MBh)
Outdoor Air Flow Rate	1187	(cfm)
Percent Outdoor Air	14.32	%
Air Specific Heat	0.2438	(Btu/lb·°F)
Air Density	0.0747	(lb/ft³)

*Value has been adjusted for elevation

	DryBulb (°F)	Humidity Ratio (gr/lb)	Relative Humidity %	Temperature Difference (°F)
Zone	75	67.2	51.5	
Return Air	76.2	67.2		
Outdoor Air	89.9	99.4		
Entering Coil	78.1	72.1		
Leaving Coil	52.9	60.2		
Supply Fan				1.98

Simulation Peak : Cooling Coil Name : RTU-04 SAAHP-1

System Name :	RTU-04	**Zone Space Sensible Loads**	-153.7 (MBh)
Time of Peak :	August 21 15:00	**Outdoor Air Flow Rate**	1207 (cfm)
Coil Air Flow :	9548 (cfm)	**Percent Outdoor Air**	13 %
Coil Capacity :	166 (MBh)	**Air Specific Heat**	0.2438 (Btu/lb·°F)
Coil Capacity Difference	-184.22 (MBh)	**Air Density**	0.0747 (lb/ft³)

*Value has been adjusted for elevation

	DryBulb (°F)	Humidity Ratio (gr/lb)	Relative Humidity %	Temperature Difference (°F)
Zone	104.5	121.2	36.4	
Return Air	105.4	121.2		
Outdoor Air	90.3	96.6		
Entering Coil	103.5	118		
Leaving Coil	88	117.8		
Supply Fan				2.16

Ideal Loads Peak : Cooling Coil Name : RTU-04 SAAHP-1

System Name :	RTU-04	**Zone Space Sensible Loads**	202.2 (MBh)
Time of Peak :	September 21 14:00	**Outdoor Air Flow Rate**	1208 (cfm)
Coil Air Flow :	9548 (cfm)	**Percent Outdoor Air**	12.64 %
Coil Capacity :	350 (MBh)	**Air Specific Heat**	0.2438 (Btu/lb·°F)
Coil Capacity Difference	-184.22 (MBh)	**Air Density**	0.0747 (lb/ft³)

*Value has been adjusted for elevation

	DryBulb (°F)	Humidity Ratio (gr/lb)	Relative Humidity %	Temperature Difference (°F)
Zone	75	66.5	51.2	
Return Air	75.9	66.5		
Outdoor Air	90.3	96.6		
Entering Coil	77.7	70.7		
Leaving Coil	52.9	60.2		
Supply Fan				1.98

Simulation Peak : Cooling Coil Name : Zone 00-22 _DSS_09 SCC-1

System Name :	Zone 00-22 _DSS_09	**Zone Space Sensible Loads**	-0.1 (MBh)
Time of Peak :	December 21 11:00	**Outdoor Air Flow Rate**	0 (cfm)
Coil Air Flow :	86 (cfm)	**Percent Outdoor Air**	0 %
Coil Capacity :	3 (MBh)	**Air Specific Heat**	0.2439 (Btu/lb·°F)
Coil Capacity Difference	0.34 (MBh)	**Air Density**	0.0747 (lb/ft³)

*Value has been adjusted for elevation

	DryBulb (°F)	Humidity Ratio (gr/lb)	Relative Humidity %	Temperature Difference (°F)
Zone	90.2	28.9	13.7	
Return Air	91	28.9		
Outdoor Air	50.5	37.4		
Entering Coil	91	28.9		
Leaving Coil	56.2	28.9		
Supply Fan				1.44

Ideal Loads Peak : Cooling Coil Name : Zone 00-22 _DSS_09 SCC-1

System Name :	Zone 00-22 _DSS_09	**Zone Space Sensible Loads**	2.3 (MBh)
Time of Peak :	September 21 15:00	**Outdoor Air Flow Rate**	0 (cfm)
Coil Air Flow :	86 (cfm)	**Percent Outdoor Air**	0 %
Coil Capacity :	3 (MBh)	**Air Specific Heat**	0.2439 (Btu/lb·°F)
Coil Capacity Difference	0.34 (MBh)	**Air Density**	0.0747 (lb/ft³)

*Value has been adjusted for elevation

	DryBulb (°F)	Humidity Ratio (gr/lb)	Relative Humidity %	Temperature Difference (°F)
Zone	81	63	39.6	
Return Air	81.8	63		
Outdoor Air	84.2	80.5		
Entering Coil	81.9	63		
Leaving Coil	53.5	61.6		
Supply Fan				1.44

Simulation Peak : Cooling Coil Name : Zone 00-24 _DSS_10 SCC-1

System Name :	Zone 00-24 _DSS_10	**Zone Space Sensible Loads**	-1 (MBh)
Time of Peak :	February 21 07:40	**Outdoor Air Flow Rate**	0 (cfm)
Coil Air Flow :	186 (cfm)	**Percent Outdoor Air**	0 %
Coil Capacity :	7 (MBh)	**Air Specific Heat**	0.2439 (Btu/lb·°F)
Coil Capacity Difference	0.79 (MBh)	**Air Density**	0.0747 (lb/ft³)

*Value has been adjusted for elevation

	DryBulb (°F)	Humidity Ratio (gr/lb)	Relative Humidity %	Temperature Difference (°F)
Zone	96.8	28.9	11.2	
Return Air	97.3	28.9		
Outdoor Air	39.1	29.2		
Entering Coil	97.3	28.9		
Leaving Coil	62.6	28.9		
Supply Fan				1.44

Ideal Loads Peak : Cooling Coil Name : Zone 00-24 _DSS_10 SCC-1

System Name :	Zone 00-24 _DSS_10	**Zone Space Sensible Loads**	5.3 (MBh)
Time of Peak :	September 21 12:00	**Outdoor Air Flow Rate**	0 (cfm)
Coil Air Flow :	186 (cfm)	**Percent Outdoor Air**	0 %
Coil Capacity :	6 (MBh)	**Air Specific Heat**	0.2439 (Btu/lb·°F)
Coil Capacity Difference	0.79 (MBh)	**Air Density**	0.0747 (lb/ft³)

*Value has been adjusted for elevation

	DryBulb (°F)	Humidity Ratio (gr/lb)	Relative Humidity %	Temperature Difference (°F)
Zone	81	63	39.6	
Return Air	81.5	63		
Outdoor Air	81.3	80.5		
Entering Coil	81.5	63		
Leaving Coil	53.5	61.6		
Supply Fan				1.44

Simulation Peak : Cooling Coil Name : Zone 00-25 _DSS_05 SCC-1

System Name :	Zone 00-25 _DSS_05	**Zone Space Sensible Loads**	-1.8 (MBh)
Time of Peak :	April 21 08:20	**Outdoor Air Flow Rate**	0 (cfm)
Coil Air Flow :	375 (cfm)	**Percent Outdoor Air**	0 %
Coil Capacity :	14 (MBh)	**Air Specific Heat**	0.2439 (Btu/lb·°F)
Coil Capacity Difference	1.76 (MBh)	**Air Density**	0.0747 (lb/ft³)

*Value has been adjusted for elevation

	DryBulb (°F)	Humidity Ratio (gr/lb)	Relative Humidity %	Temperature Difference (°F)
Zone	98.5	49.2	17.9	
Return Air	98.9	49.2		
Outdoor Air	59.6	49.2		
Entering Coil	98.9	49.2		
Leaving Coil	64.1	49.2		
Supply Fan				1.44

Ideal Loads Peak : Cooling Coil Name : Zone 00-25 _DSS_05 SCC-1

System Name :	Zone 00-25 _DSS_05	**Zone Space Sensible Loads**	10.7 (MBh)
Time of Peak :	July 21 09:20	**Outdoor Air Flow Rate**	0 (cfm)
Coil Air Flow :	375 (cfm)	**Percent Outdoor Air**	0 %
Coil Capacity :	12 (MBh)	**Air Specific Heat**	0.2439 (Btu/lb·°F)
Coil Capacity Difference	1.76 (MBh)	**Air Density**	0.0747 (lb/ft³)

*Value has been adjusted for elevation

	DryBulb (°F)	Humidity Ratio (gr/lb)	Relative Humidity %	Temperature Difference (°F)
Zone	81	63	39.6	
Return Air	81.4	63		
Outdoor Air	80.4	99.4		
Entering Coil	81.4	63		
Leaving Coil	53.5	61.6		
Supply Fan				1.44

Simulation Peak : Cooling Coil Name : Zone 00-26 _DSS_02 SCC-1

System Name :	Zone 00-26 _DSS_02	**Zone Space Sensible Loads**	-2.1 (MBh)
Time of Peak :	March 21 17:00	**Outdoor Air Flow Rate**	0 (cfm)
Coil Air Flow :	449 (cfm)	**Percent Outdoor Air**	0 %
Coil Capacity :	16 (MBh)	**Air Specific Heat**	0.2439 (Btu/lb·°F)
Coil Capacity Difference	1.49 (MBh)	**Air Density**	0.0747 (lb/ft³)

*Value has been adjusted for elevation

	DryBulb (°F)	Humidity Ratio (gr/lb)	Relative Humidity %	Temperature Difference (°F)
Zone	99.9	28.9	10.2	
Return Air	100.3	28.9		
Outdoor Air	62.7	39.7		
Entering Coil	100.3	28.9		
Leaving Coil	66.6	28.9		
Supply Fan				1.44

Ideal Loads Peak : Cooling Coil Name : Zone 00-26 _DSS_02 SCC-1

System Name :	Zone 00-26 _DSS_02	**Zone Space Sensible Loads**	12.8 (MBh)
Time of Peak :	July 21 17:00	**Outdoor Air Flow Rate**	0 (cfm)
Coil Air Flow :	449 (cfm)	**Percent Outdoor Air**	0 %
Coil Capacity :	15 (MBh)	**Air Specific Heat**	0.2439 (Btu/lb·°F)
Coil Capacity Difference	1.49 (MBh)	**Air Density**	0.0747 (lb/ft³)

*Value has been adjusted for elevation

	DryBulb (°F)	Humidity Ratio (gr/lb)	Relative Humidity %	Temperature Difference (°F)
Zone	81	63	39.6	
Return Air	81.3	63		
Outdoor Air	87.8	99.4		
Entering Coil	81.3	63		
Leaving Coil	53.5	61.6		
Supply Fan				1.44

Simulation Peak : Cooling Coil Name : Zone 00-27 _DSS_04 SCC-1

System Name :	Zone 00-27 _DSS_04	**Zone Space Sensible Loads**	-0.6 (MBh)
Time of Peak :	October 21 05:00	**Outdoor Air Flow Rate**	0 (cfm)
Coil Air Flow :	16 (cfm)	**Percent Outdoor Air**	0 %
Coil Capacity :	1 (MBh)	**Air Specific Heat**	0.2439 (Btu/lb·°F)
Coil Capacity Difference	0.1 (MBh)	**Air Density**	0.0747 (lb/ft³)

*Value has been adjusted for elevation

	DryBulb (°F)	Humidity Ratio (gr/lb)	Relative Humidity %	Temperature Difference (°F)
Zone	96.1	54	21.2	
Return Air	99.1	54		
Outdoor Air	50.8	55.4		
Entering Coil	99.1	54		
Leaving Coil	60.1	54		
Supply Fan				1.44

Ideal Loads Peak : Cooling Coil Name : Zone 00-27 _DSS_04 SCC-1

System Name :	Zone 00-27 _DSS_04	**Zone Space Sensible Loads**	0.5 (MBh)
Time of Peak :	July 21 19:00	**Outdoor Air Flow Rate**	0 (cfm)
Coil Air Flow :	16 (cfm)	**Percent Outdoor Air**	0 %
Coil Capacity :	1 (MBh)	**Air Specific Heat**	0.2439 (Btu/lb·°F)
Coil Capacity Difference	0.1 (MBh)	**Air Density**	0.0747 (lb/ft³)

*Value has been adjusted for elevation

	DryBulb (°F)	Humidity Ratio (gr/lb)	Relative Humidity %	Temperature Difference (°F)
Zone	81	63	39.6	
Return Air	84	63		
Outdoor Air	82.5	99.4		
Entering Coil	84	63		
Leaving Coil	53.5	61.6		
Supply Fan				1.44

Simulation Peak : Cooling Coil Name : Zone 00-28 _DSS_04 SCC-1

System Name :	Zone 00-28 _DSS_04	**Zone Space Sensible Loads**	-4.4 (MBh)
Time of Peak :	October 21 05:00	**Outdoor Air Flow Rate**	0 (cfm)
Coil Air Flow :	122 (cfm)	**Percent Outdoor Air**	0 %
Coil Capacity :	5 (MBh)	**Air Specific Heat**	0.2439 (Btu/lb·°F)
Coil Capacity Difference	0.6 (MBh)	**Air Density**	0.0747 (lb/ft³)

*Value has been adjusted for elevation

	DryBulb (°F)	Humidity Ratio (gr/lb)	Relative Humidity %	Temperature Difference (°F)
Zone	89.8	54	25.8	
Return Air	90.2	54		
Outdoor Air	50.8	55.4		
Entering Coil	90.2	54		
Leaving Coil	55.2	54		
Supply Fan				1.44

Ideal Loads Peak : Cooling Coil Name : Zone 00-28 _DSS_04 SCC-1

System Name :	Zone 00-28 _DSS_04	**Zone Space Sensible Loads**	3.5 (MBh)
Time of Peak :	July 21 19:00	**Outdoor Air Flow Rate**	0 (cfm)
Coil Air Flow :	122 (cfm)	**Percent Outdoor Air**	0 %
Coil Capacity :	4 (MBh)	**Air Specific Heat**	0.2439 (Btu/lb·°F)
Coil Capacity Difference	0.6 (MBh)	**Air Density**	0.0747 (lb/ft³)

*Value has been adjusted for elevation

	DryBulb (°F)	Humidity Ratio (gr/lb)	Relative Humidity %	Temperature Difference (°F)
Zone	81	63	39.6	
Return Air	81.4	63		
Outdoor Air	82.5	99.4		
Entering Coil	81.4	63		
Leaving Coil	53.5	61.6		
Supply Fan				1.44

Simulation Peak : Cooling Coil Name : Zone 00-45 _DSS_01 SCC-1

System Name :	Zone 00-45 _DSS_01	**Zone Space Sensible Loads**	-19.1 (MBh)
Time of Peak :	July 21 18:20	**Outdoor Air Flow Rate**	0 (cfm)
Coil Air Flow :	605 (cfm)	**Percent Outdoor Air**	0 %
Coil Capacity :	20 (MBh)	**Air Specific Heat**	0.2439 (Btu/lb·°F)
Coil Capacity Difference	0.42 (MBh)	**Air Density**	0.0747 (lb/ft³)

*Value has been adjusted for elevation

	DryBulb (°F)	Humidity Ratio (gr/lb)	Relative Humidity %	Temperature Difference (°F)
Zone	84.5	54	30.5	
Return Air	84.5	54		
Outdoor Air	84.6	99.5		
Entering Coil	84.5	54		
Leaving Coil	53.7	54		
Supply Fan				1.44

Ideal Loads Peak : Cooling Coil Name : Zone 00-45 _DSS_01 SCC-1

System Name :	Zone 00-45 _DSS_01	**Zone Space Sensible Loads**	17.2 (MBh)
Time of Peak :	July 21 19:00	**Outdoor Air Flow Rate**	0 (cfm)
Coil Air Flow :	605 (cfm)	**Percent Outdoor Air**	0 %
Coil Capacity :	20 (MBh)	**Air Specific Heat**	0.2439 (Btu/lb·°F)
Coil Capacity Difference	0.42 (MBh)	**Air Density**	0.0747 (lb/ft³)

*Value has been adjusted for elevation

	DryBulb (°F)	Humidity Ratio (gr/lb)	Relative Humidity %	Temperature Difference (°F)
Zone	81	63	39.6	
Return Air	81.1	63		
Outdoor Air	82.5	99.4		
Entering Coil	81	63		
Leaving Coil	53.5	61.6		
Supply Fan				1.44

Simulation Peak : Cooling Coil Name : Zone 00-48 _DSS_03 SCC-1

System Name :	Zone 00-48 _DSS_03	**Zone Space Sensible Loads**	-4.3 (MBh)
Time of Peak :	October 21 05:00	**Outdoor Air Flow Rate**	0 (cfm)
Coil Air Flow :	116 (cfm)	**Percent Outdoor Air**	0 %
Coil Capacity :	4 (MBh)	**Air Specific Heat**	0.2439 (Btu/lb·°F)
Coil Capacity Difference	0.64 (MBh)	**Air Density**	0.0747 (lb/ft³)

*Value has been adjusted for elevation

	DryBulb (°F)	Humidity Ratio (gr/lb)	Relative Humidity %	Temperature Difference (°F)
Zone	95.6	54	21.5	
Return Air	96	54		
Outdoor Air	50.8	55.4		
Entering Coil	96	54		
Leaving Coil	60.4	54		
Supply Fan				1.44

Ideal Loads Peak : Cooling Coil Name : Zone 00-48 _DSS_03 SCC-1

System Name :	Zone 00-48 _DSS_03	**Zone Space Sensible Loads**	3.3 (MBh)
Time of Peak :	August 21 11:40	**Outdoor Air Flow Rate**	0 (cfm)
Coil Air Flow :	116 (cfm)	**Percent Outdoor Air**	0 %
Coil Capacity :	4 (MBh)	**Air Specific Heat**	0.2439 (Btu/lb·°F)
Coil Capacity Difference	0.64 (MBh)	**Air Density**	0.0747 (lb/ft³)

*Value has been adjusted for elevation

	DryBulb (°F)	Humidity Ratio (gr/lb)	Relative Humidity %	Temperature Difference (°F)
Zone	81	63	39.6	
Return Air	81.4	63		
Outdoor Air	86.8	96.6		
Entering Coil	81.4	63		
Leaving Coil	53.5	61.6		
Supply Fan				1.44

Simulation Peak : Cooling Coil Name : Zone 00-49 _DSS_03 SCC-1

System Name :	Zone 00-49 _DSS_03	**Zone Space Sensible Loads**	-0.4 (MBh)
Time of Peak :	October 21 05:00	**Outdoor Air Flow Rate**	0 (cfm)
Coil Air Flow :	11 (cfm)	**Percent Outdoor Air**	0 %
Coil Capacity :	0 (MBh)	**Air Specific Heat**	0.2439 (Btu/lb·°F)
Coil Capacity Difference	0.08 (MBh)	**Air Density**	0.0747 (lb/ft³)

*Value has been adjusted for elevation

	DryBulb (°F)	Humidity Ratio (gr/lb)	Relative Humidity %	Temperature Difference (°F)
Zone	102.1	54	17.7	
Return Air	106	54		
Outdoor Air	50.8	55.4		
Entering Coil	106	54		
Leaving Coil	65.1	54		
Supply Fan				1.44

Ideal Loads Peak : Cooling Coil Name : Zone 00-49 _DSS_03 SCC-1

System Name :	Zone 00-49 _DSS_03	**Zone Space Sensible Loads**	0.3 (MBh)
Time of Peak :	August 21 11:40	**Outdoor Air Flow Rate**	0 (cfm)
Coil Air Flow :	11 (cfm)	**Percent Outdoor Air**	0 %
Coil Capacity :	0 (MBh)	**Air Specific Heat**	0.2439 (Btu/lb·°F)
Coil Capacity Difference	0.08 (MBh)	**Air Density**	0.0747 (lb/ft³)

*Value has been adjusted for elevation

	DryBulb (°F)	Humidity Ratio (gr/lb)	Relative Humidity %	Temperature Difference (°F)
Zone	81	63	39.6	
Return Air	84.9	63		
Outdoor Air	86.8	96.6		
Entering Coil	84.9	63		
Leaving Coil	53.5	61.6		
Supply Fan				1.44

Simulation Peak : Cooling Coil Name : Zone 01-07 _DSS_05 SCC-1

System Name :	Zone 01-07 _DSS_05	**Zone Space Sensible Loads**	0 (MBh)
Time of Peak :	January 21 10:40	**Outdoor Air Flow Rate**	0 (cfm)
Coil Air Flow :	65 (cfm)	**Percent Outdoor Air**	0 %
Coil Capacity :	3 (MBh)	**Air Specific Heat**	0.2439 (Btu/lb·°F)
Coil Capacity Difference	0.27 (MBh)	**Air Density**	0.0747 (lb/ft³)

*Value has been adjusted for elevation

	DryBulb (°F)	Humidity Ratio (gr/lb)	Relative Humidity %	Temperature Difference (°F)
Zone	88.4	28.9	14.5	
Return Air	90.9	28.9		
Outdoor Air	52	40.4		
Entering Coil	90.9	28.9		
Leaving Coil	54	28.9		
Supply Fan				1.44

Ideal Loads Peak : Cooling Coil Name : Zone 01-07 _DSS_05 SCC-1

System Name :	Zone 01-07 _DSS_05	**Zone Space Sensible Loads**	1.6 (MBh)
Time of Peak :	July 21 11:20	**Outdoor Air Flow Rate**	0 (cfm)
Coil Air Flow :	65 (cfm)	**Percent Outdoor Air**	0 %
Coil Capacity :	2 (MBh)	**Air Specific Heat**	0.2439 (Btu/lb·°F)
Coil Capacity Difference	0.27 (MBh)	**Air Density**	0.0747 (lb/ft³)

*Value has been adjusted for elevation

	DryBulb (°F)	Humidity Ratio (gr/lb)	Relative Humidity %	Temperature Difference (°F)
Zone	81	63	39.6	
Return Air	83.8	63		
Outdoor Air	86.6	99.4		
Entering Coil	83.8	63		
Leaving Coil	53.5	61.6		
Supply Fan				1.44

Simulation Peak : Cooling Coil Name : Zone 01-08 _DSS_07 SCC-1

System Name :	Zone 01-08 _DSS_07	**Zone Space Sensible Loads**	-4.3 (MBh)
Time of Peak :	October 21 04:40	**Outdoor Air Flow Rate**	0 (cfm)
Coil Air Flow :	121 (cfm)	**Percent Outdoor Air**	0 %
Coil Capacity :	5 (MBh)	**Air Specific Heat**	0.2439 (Btu/lb·°F)
Coil Capacity Difference	0.57 (MBh)	**Air Density**	0.0747 (lb/ft³)

*Value has been adjusted for elevation

	DryBulb (°F)	Humidity Ratio (gr/lb)	Relative Humidity %	Temperature Difference (°F)
Zone	88	54	27.2	
Return Air	88.3	54		
Outdoor Air	50.9	55.7		
Entering Coil	88.3	54		
Leaving Coil	53.6	54		
Supply Fan				1.44

Ideal Loads Peak : Cooling Coil Name : Zone 01-08 _DSS_07 SCC-1

System Name :	Zone 01-08 _DSS_07	**Zone Space Sensible Loads**	3.4 (MBh)
Time of Peak :	July 21 16:40	**Outdoor Air Flow Rate**	0 (cfm)
Coil Air Flow :	121 (cfm)	**Percent Outdoor Air**	0 %
Coil Capacity :	4 (MBh)	**Air Specific Heat**	0.2439 (Btu/lb·°F)
Coil Capacity Difference	0.57 (MBh)	**Air Density**	0.0747 (lb/ft³)

*Value has been adjusted for elevation

	DryBulb (°F)	Humidity Ratio (gr/lb)	Relative Humidity %	Temperature Difference (°F)
Zone	81	63	39.6	
Return Air	81.3	63		
Outdoor Air	88.3	99.4		
Entering Coil	81.3	63		
Leaving Coil	53.5	61.6		
Supply Fan				1.44

Simulation Peak : Cooling Coil Name : Zone 01-09 _DSS_07 SCC-1

System Name :	Zone 01-09 _DSS_07	**Zone Space Sensible Loads**	-0.7 (MBh)
Time of Peak :	October 21 04:00	**Outdoor Air Flow Rate**	0 (cfm)
Coil Air Flow :	18 (cfm)	**Percent Outdoor Air**	0 %
Coil Capacity :	1 (MBh)	**Air Specific Heat**	0.2439 (Btu/lb·°F)
Coil Capacity Difference	0.11 (MBh)	**Air Density**	0.0747 (lb/ft³)

*Value has been adjusted for elevation

	DryBulb (°F)	Humidity Ratio (gr/lb)	Relative Humidity %	Temperature Difference (°F)
Zone	94.6	54	22.2	
Return Air	96.9	54		
Outdoor Air	51.3	56.4		
Entering Coil	96.9	54		
Leaving Coil	58.8	54		
Supply Fan				1.44

Ideal Loads Peak : Cooling Coil Name : Zone 01-09 _DSS_07 SCC-1

System Name :	Zone 01-09 _DSS_07	**Zone Space Sensible Loads**	0.5 (MBh)
Time of Peak :	July 21 17:00	**Outdoor Air Flow Rate**	0 (cfm)
Coil Air Flow :	18 (cfm)	**Percent Outdoor Air**	0 %
Coil Capacity :	1 (MBh)	**Air Specific Heat**	0.2439 (Btu/lb·°F)
Coil Capacity Difference	0.11 (MBh)	**Air Density**	0.0747 (lb/ft³)

*Value has been adjusted for elevation

	DryBulb (°F)	Humidity Ratio (gr/lb)	Relative Humidity %	Temperature Difference (°F)
Zone	81	63	39.6	
Return Air	83.5	63		
Outdoor Air	87.8	99.4		
Entering Coil	83.5	63		
Leaving Coil	53.5	61.6		
Supply Fan				1.44

Simulation Peak : Cooling Coil Name : Zone 01-27 _DSS_08 SCC-1

System Name :	Zone 01-27 _DSS_08	**Zone Space Sensible Loads**	-4.6 (MBh)
Time of Peak :	October 21 23:20	**Outdoor Air Flow Rate**	0 (cfm)
Coil Air Flow :	130 (cfm)	**Percent Outdoor Air**	0 %
Coil Capacity :	5 (MBh)	**Air Specific Heat**	0.2439 (Btu/lb·°F)
Coil Capacity Difference	0.55 (MBh)	**Air Density**	0.0747 (lb/ft³)

*Value has been adjusted for elevation

	DryBulb (°F)	Humidity Ratio (gr/lb)	Relative Humidity %	Temperature Difference (°F)
Zone	87.7	54	27.6	
Return Air	88	54		
Outdoor Air	56.2	65.1		
Entering Coil	88	54		
Leaving Coil	53.7	54		
Supply Fan				1.44

Ideal Loads Peak : Cooling Coil Name : Zone 01-27 _DSS_08 SCC-1

System Name :	Zone 01-27 _DSS_08	**Zone Space Sensible Loads**	3.7 (MBh)
Time of Peak :	July 21 17:40	**Outdoor Air Flow Rate**	0 (cfm)
Coil Air Flow :	129 (cfm)	**Percent Outdoor Air**	0 %
Coil Capacity :	4 (MBh)	**Air Specific Heat**	0.2439 (Btu/lb·°F)
Coil Capacity Difference	0.55 (MBh)	**Air Density**	0.0747 (lb/ft³)

*Value has been adjusted for elevation

	DryBulb (°F)	Humidity Ratio (gr/lb)	Relative Humidity %	Temperature Difference (°F)
Zone	81	63	39.6	
Return Air	81.3	63		
Outdoor Air	86.4	99.4		
Entering Coil	81.3	63		
Leaving Coil	53.5	61.6		
Supply Fan				1.44

Simulation Peak : Cooling Coil Name : Zone 01-28 _DSS_02 SCC-1

System Name :	Zone 01-28 _DSS_02	**Zone Space Sensible Loads**	-6.2 (MBh)
Time of Peak :	March 21 16:20	**Outdoor Air Flow Rate**	0 (cfm)
Coil Air Flow :	805 (cfm)	**Percent Outdoor Air**	0 %
Coil Capacity :	30 (MBh)	**Air Specific Heat**	0.2439 (Btu/lb·°F)
Coil Capacity Difference	3.28 (MBh)	**Air Density**	0.0747 (lb/ft³)

*Value has been adjusted for elevation

	DryBulb (°F)	Humidity Ratio (gr/lb)	Relative Humidity %	Temperature Difference (°F)
Zone	110.2	28.9	7.5	
Return Air	110.4	28.9		
Outdoor Air	63.9	39.7		
Entering Coil	110.4	28.9		
Leaving Coil	76.2	28.9		
Supply Fan				1.44

Ideal Loads Peak : Cooling Coil Name : Zone 01-28 _DSS_02 SCC-1

System Name :	Zone 01-28 _DSS_02	**Zone Space Sensible Loads**	22.9 (MBh)
Time of Peak :	July 21 16:40	**Outdoor Air Flow Rate**	0 (cfm)
Coil Air Flow :	805 (cfm)	**Percent Outdoor Air**	0 %
Coil Capacity :	27 (MBh)	**Air Specific Heat**	0.2439 (Btu/lb·°F)
Coil Capacity Difference	3.28 (MBh)	**Air Density**	0.0747 (lb/ft³)

*Value has been adjusted for elevation

	DryBulb (°F)	Humidity Ratio (gr/lb)	Relative Humidity %	Temperature Difference (°F)
Zone	81	63	39.6	
Return Air	81.2	63		
Outdoor Air	88.3	99.4		
Entering Coil	81.2	63		
Leaving Coil	53.5	61.6		
Supply Fan				1.44

Simulation Peak : Cooling Coil Name : Zone 01-29 _DSS_06 SCC-1

System Name :	Zone 01-29 _DSS_06	**Zone Space Sensible Loads**	-3.4 (MBh)
Time of Peak :	June 21 20:40	**Outdoor Air Flow Rate**	0 (cfm)
Coil Air Flow :	74 (cfm)	**Percent Outdoor Air**	0 %
Coil Capacity :	4 (MBh)	**Air Specific Heat**	0.2439 (Btu/lb·°F)
Coil Capacity Difference	0.34 (MBh)	**Air Density**	0.0747 (lb/ft³)

*Value has been adjusted for elevation

	DryBulb (°F)	Humidity Ratio (gr/lb)	Relative Humidity %	Temperature Difference (°F)
Zone	97.5	54	20.3	
Return Air	100.6	54		
Outdoor Air	76.2	94.9		
Entering Coil	100.6	54		
Leaving Coil	53.6	54		
Supply Fan				1.44

Ideal Loads Peak : Cooling Coil Name : Zone 01-29 _DSS_06 SCC-1

System Name :	Zone 01-29 _DSS_06	**Zone Space Sensible Loads**	1.5 (MBh)
Time of Peak :	July 21 16:20	**Outdoor Air Flow Rate**	21 (cfm)
Coil Air Flow :	74 (cfm)	**Percent Outdoor Air**	30 %
Coil Capacity :	3 (MBh)	**Air Specific Heat**	0.2439 (Btu/lb·°F)
Coil Capacity Difference	0.34 (MBh)	**Air Density**	0.0747 (lb/ft³)

*Value has been adjusted for elevation

	DryBulb (°F)	Humidity Ratio (gr/lb)	Relative Humidity %	Temperature Difference (°F)
Zone	81	63	39.6	
Return Air	85.2	63		
Outdoor Air	88.9	99.4		
Entering Coil	86.3	73.5		
Leaving Coil	53.5	61.6		
Supply Fan				1.44

System Cooling Checksums

RTU-01

Coil Peak
Peak Time (Mo/D/H:M): 8/21/14:00
Outside Air (DB/WB/HR): 90.3 / 73.3 / 96.6

	Instant Sensible (Btu/h)	Time Delay Sensible (Btu/h)	Latent (Btu/h)	Total (Btu/h)	Percent of Total (%)	Btu/h per ft²
Roof	0	0	0	0	0.0	0.0
Other Roof	0	0	0	0	0.0	0.0
Glass	31,245	23,863	0	55,108	21.9	7.2
Door	0	70	0	70	0.0	0.1
Wall	0	2,375	0	2,375	0.9	1.0
Below-Grade Wall	0	0	0	0	0.0	0.0
Other Wall	0	0	0	0	0.0	0.0
Partition	0	2,877	0	2,877	1.1	0.1
Exterior Floor	0	0	0	0	0.0	0.0
Interior Floor	0	0	0	0	0.0	0.0
Slab	0	-8,031	0	-8,031	-3.2	-0.7
Other Floor	0	0	0	0	0.0	0.0
Infiltration	0	0	0	0	0.0	0.0
Envelope Subtotal	31,245	21,154	00	52,400	20.8	-
People	8,944	10,222	19,270	38,437	15.3	3.8
Lights	8,677	11,899	0	20,575	8.2	3.1
RA Sensible (Lights)	8,578	0	0	8,578	3.4	0.0
Miscellaneous Loads	44,466	28,435	1,541	74,441	29.6	7.4
Internal Subtotal	70,664	50,556	20,811	142,031	56.4	-
Ventilation	18,891	0	23,626	42,517	16.9	-
DOAS Direct to Zone	0	0	0	0	0.0	-
Ceiling	0	838	0	838	0.3	0.1
Refrigeration	0	0	0	0	0.0	0.0
Service Water	0	0	0	0	0.0	0.0
HVAC Equipment Losses	0	0	0	0	0.0	0.0
Adj Air Transfer Heat	0	0	0	0	0.0	0.0
Supply Fan Heat	16,699	0	-	16,699	6.6	-
Time Delay Correction	0	-8,492	-	-8,492	-3.4	-
Sizing Factor Correction	2,407	-	-	2,407	1.0	-
Airflow Correction	1,998	0	1,305	3,302	1.3	-
Grand Total	141,904	64,055	45,741	251,701	100.0	

Fan Peak
Peak Time (Mo/D/H:M): 9/21/14:00
Outside Air (DB/WB/HR): 84.2 / 68.6 / 80.3

	Instant Sensible (Btu/h)	Time Delay Sensible (Btu/h)	Total Sensible (Btu/h)	Percent of Total (%)	Related Area (ft²)
Roof	0	0	0	0.0	0
Other Roof	0	0	0	0.0	0
Glass	30,977	31,245	62,222	38.5	7,649
Door	0	64	64	0.0	1,061
Wall	0	2,336	2,336	1.4	2,291
Below-Grade Wall	0	0	0	0.0	0
Other Wall	0	0	0	0.0	2,291
Partition	0	2,571	2,571	1.6	22,487
Exterior Floor	0	0	0	0.0	0
Interior Floor	0	0	0	0.0	0
Slab	0	-9,204	-9,204	-5.7	10,933
Other Floor	0	0	0	0.0	0
Infiltration	0	0	0	0.0	2,291
Envelope Subtotal	30,977	27,013	57,990	35.8	-
People	8,944	10,222	19,166	11.8	10,095
Lights	8,677	11,899	20,575	12.7	10,095
RA Sensible (Lights)	-	-	-	-	-
Miscellaneous Loads	44,466	28,435	72,900	45.1	10,095
Internal Subtotal	62,086	50,556	112,642	69.6	-
Ventilation	-	-	-	-	-
DOAS Direct to Zone			0	0.0	0
Ceiling	0	81	81	0.0	10,933
Refrigeration			0	0.0	10,095
Service Water			0	0.0	10,095
HVAC Equipment Losses			0	0.0	0
Adj Air Transfer Heat	0	0	0	0.0	0
Supply Fan Heat	-	-	-	-	-
Time Delay Correction	0	-8,492	-8,492	-5.2	-
Sizing Factor Correction	2,556	-	2,556	1.6	-
Airflow Correction	-2,985	-	-2,985	-1.8	-
Grand Total	92,635	69,157	161,792	100.0	

Temperatures °F	
Supply	55.0
Return	76.4
Mixed Air	78.5
Fan Heat TD	2.1

Airflows cfm	
Main Fan	7,407
Ventilation	1,131
Infiltration	0
Min Stop / Reheat	3,365

Engineering Checks	
% OA	15.26
cfm/ft²	.73
Btu/h-ft²	24.95
cfm/ton	353.18
ft²/ton	481.26
People	81
ft²/person	124.40

Areas ft²	
Roof	0
Other Roof	0
Ceiling	10,933
Window	7,649
Door	1,061
Wall	2,291
Below-Grade Wall	0
Other Wall	2,291
Partition	22,487
Exterior Floor	0
Internal Floor	0
Slab	10,933
Other Floor	0

RTU-02

Coil Peak						
Peak Time (Mo/D/H:M):	7/21/15:40					
Outside Air (DB/WB/HR):	89.9 / 73.6 / 99.5					
	Instant Sensible (Btu/h)	Time Delay Sensible (Btu/h)	Latent (Btu/h)	Total (Btu/h)	Percent of Total (%)	Btu/h per ft²
Roof	0	0	0	0	0.0	0.0
Other Roof	0	0	0	0	0.0	0.0
Glass	24,330	18,792	0	43,122	16.2	5.2
Door	0	271	0	271	0.1	0.5
Wall	0	1,317	0	1,317	0.5	0.6
Below-Grade Wall	0	0	0	0	0.0	0.0
Other Wall	0	0	0	0	0.0	0.0
Partition	0	2,417	0	2,417	0.9	0.1
Exterior Floor	0	0	0	0	0.0	0.0
Interior Floor	0	0	0	0	0.0	0.0
Slab	0	-7,141	0	-7,141	-2.7	-0.8
Other Floor	0	0	0	0	0.0	0.0
Infiltration	0	0	0	0	0.0	0.0
Envelope Subtotal	24,330	15,656	00	39,986	15.0	-
People	18,673	22,148	36,627	77,448	29.0	9.6
Lights	7,596	10,557	0	18,153	6.8	3.3
RA Sensible (Lights)	6,649	0	0	6,649	2.5	0.0
Miscellaneous Loads	27,086	18,355	0	45,441	17.0	5.6
Internal Subtotal	60,004	51,060	36,627	147,691	55.4	-
Ventilation	23,045	0	28,081	51,126	19.2	-
DOAS Direct to Zone	0	0	0	0	0.0	-
Ceiling	0	-3,492	0	-3,492	-1.3	-0.4
Refrigeration	0	0	0	0	0.0	0.0
Service Water	0	0	0	0	0.0	0.0
HVAC Equipment Losses	0	0	0	0	0.0	0.0
Adj Air Transfer Heat	0	0	0	0	0.0	0.0
Supply Fan Heat	14,980	0	-	14,980	5.6	-
Time Delay Correction	0	-9,224	-	-9,224	-3.5	-
Sizing Factor Correction	534	-	-	534	0.2	-
Airflow Correction	13,310	0	11,734	25,044	9.4	-
Grand Total	136,202	53,999	76,442	266,643	100.0	

Fan Peak					
Peak Time (Mo/D/H:M):	7/21/17:40				
Outside Air (DB/WB/HR):	86.4 / 72.7 / 99.5				
	Instant Sensible (Btu/h)	Time Delay Sensible (Btu/h)	Total Sensible (Btu/h)	Percent of Total (%)	Related Area (ft²)
Roof	0	0	0	0.0	0
Other Roof	0	0	0	0.0	0
Glass	22,651	20,748	43,399	29.8	8,313
Door	0	251	251	0.2	526
Wall	0	1,195	1,195	0.8	2,367
Below-Grade Wall	0	0	0	0.0	0
Other Wall	0	0	0	0.0	2,367
Partition	0	2,021	2,021	1.4	16,565
Exterior Floor	0	0	0	0.0	0
Interior Floor	0	0	0	0.0	0
Slab	0	-6,709	-6,709	-4.6	8,696
Other Floor	0	0	0	0.0	0
Infiltration	0	0	0	0.0	2,367
Envelope Subtotal	22,651	17,506	40,157	27.6	-
People	18,673	23,568	42,241	29.0	8,073
Lights	7,596	10,557	18,153	12.5	8,073
RA Sensible (Lights)	-	-	-	-	-
Miscellaneous Loads	27,086	18,355	45,441	31.2	8,073
Internal Subtotal	53,355	52,480	105,835	72.7	-
Ventilation	-	-	-	-	-
DOAS Direct to Zone			0	0.0	0
Ceiling	0	-4,194	-4,194	-2.9	8,696
Refrigeration			0	0.0	8,073
Service Water			0	0.0	8,073
HVAC Equipment Losses			0	0.0	0
Adj Air Transfer Heat	0	0	0	0.0	0
Supply Fan Heat	-	-	-	-	-
Time Delay Correction	0	-9,325	-9,325	-6.4	-
Sizing Factor Correction	519	-	519	0.4	-
Airflow Correction	12,535	-	12,535	8.6	-
Grand Total	89,060	56,468	145,527	100.0	

Temperatures °F	
Supply	55.0
Return	76.4
Mixed Air	79.3
Fan Heat TD	2.1

Airflows cfm	
Main Fan	6,644
Ventilation	1,424
Infiltration	0
Min Stop / Reheat	4,483

Engineering Checks	
% OA	21.44
cfm/ft²	.82
Btu/h-ft²	33.05
cfm/ton	299.07
ft²/ton	363.31
People	176
ft²/person	45.86

Areas ft²	
Roof	0
Other Roof	0
Ceiling	8,696
Window	8,313
Door	526
Wall	2,367
Below-Grade Wall	0
Other Wall	2,367
Partition	16,565
Exterior Floor	0
Internal Floor	0
Slab	8,696
Other Floor	0

RTU-03

Coil Peak						
Peak Time (Mo/D/H:M):	7/21/15:40					
Outside Air (DB/WB/HR):	89.9 / 73.6 / 99.5					
	Instant Sensible (Btu/h)	Time Delay Sensible (Btu/h)	Latent (Btu/h)	Total (Btu/h)	Percent of Total (%)	Btu/h per ft²
Roof	0	0	0	0	0.0	0.0
Other Roof	0	0	0	0	0.0	0.0
Glass	23,856	42,965	0	66,821	23.7	6.9
Door	0	-793	0	-793	-0.3	-1.0
Wall	0	-300	0	-300	-0.1	-0.1
Below-Grade Wall	0	0	0	0	0.0	0.0
Other Wall	0	0	0	0	0.0	0.0
Partition	0	-11,358	0	-11,358	-4.0	-0.5
Exterior Floor	0	-2	0	-2	0.0	-1.6
Interior Floor	0	-29,436	0	-29,436	-10.4	-2.7
Slab	0	0	0	0	0.0	0.0
Other Floor	0	0	0	0	0.0	0.0
Infiltration	0	0	0	0	0.0	0.0
Envelope Subtotal	23,856	1,077	00	24,933	8.8	-
People	10,689	25,869	22,556	59,114	20.9	5.8
Lights	8,852	23,761	0	32,614	11.6	4.2
RA Sensible (Lights)	8,638	0	0	8,638	3.1	0.0
Miscellaneous Loads	40,732	52,061	1,541	94,334	33.4	9.3
Internal Subtotal	68,910	101,692	24,097	194,699	69.0	-
Ventilation	19,394	0	27,252	46,645	16.5	-
DOAS Direct to Zone	0	0	0	0	0.0	-
Ceiling	0	4,785	0	4,785	1.7	0.4
Refrigeration	0	0	0	0	0.0	0.0
Service Water	0	0	0	0	0.0	0.0
HVAC Equipment Losses	0	0	0	0	0.0	0.0
Adj Air Transfer Heat	0	0	0	0	0.0	0.0
Supply Fan Heat	18,805	0	-	18,805	6.7	-
Time Delay Correction	0	-15,877	-	-15,877	-5.6	-
Sizing Factor Correction	3,432	-	-	3,432	1.2	-
Airflow Correction	2,964	0	1,905	4,869	1.7	-
Grand Total	137,361	91,677	53,254	282,291	100.0	

Fan Peak					
Peak Time (Mo/D/H:M):	7/21/16:00				
Outside Air (DB/WB/HR):	89.4 / 73.5 / 99.5				
	Instant Sensible (Btu/h)	Time Delay Sensible (Btu/h)	Total Sensible (Btu/h)	Percent of Total (%)	Related Area (ft²)
Roof	0	0	0	0.0	0
Other Roof	0	0	0	0.0	0
Glass	23,671	43,667	67,339	37.0	9,739
Door	0	-782	-782	-0.4	819
Wall	0	-299	-299	-0.2	2,370
Below-Grade Wall	0	0	0	0.0	0
Other Wall	0	0	0	0.0	2,370
Partition	0	-11,194	-11,194	-6.1	22,327
Exterior Floor	0	-1	-1	0.0	1
Interior Floor	0	-29,915	-29,915	-16.4	11,018
Slab	0	0	0	0.0	0
Other Floor	0	0	0	0.0	11,018
Infiltration	0	0	0	0.0	2,370
Envelope Subtotal	23,671	1,475	25,146	13.8	-
People	10,689	26,093	36,781	20.2	10,176
Lights	8,852	23,761	32,614	17.9	10,176
RA Sensible (Lights)	-	-	-	-	-
Miscellaneous Loads	40,732	52,078	92,810	50.9	10,176
Internal Subtotal	60,273	101,932	162,205	89.0	-
Ventilation	-	-	-	-	-
DOAS Direct to Zone			0	0.0	0
Ceiling	0	4,826	4,826	2.6	11,019
Refrigeration			0	0.0	10,176
Service Water			0	0.0	10,176
HVAC Equipment Losses			0	0.0	0
Adj Air Transfer Heat	0	0	0	0.0	0
Supply Fan Heat	-	-	-	-	-
Time Delay Correction	0	-15,904	-15,904	-8.7	-
Sizing Factor Correction	3,410	-	3,410	1.9	-
Airflow Correction	2,517	-	2,517	1.4	-
Grand Total	89,872	92,329	182,201	100.0	

Temperatures °F	
Supply	55.0
Return	76.2
Mixed Air	78.1
Fan Heat TD	2.1

Airflows cfm	
Main Fan	8,341
Ventilation	1,194
Infiltration	0
Min Stop / Reheat	3,815

Engineering Checks	
% OA	14.32
cfm/ft²	.82
Btu/h-ft²	27.76
cfm/ton	354.63
ft²/ton	432.57
People	98
ft²/person	104.02

Areas ft²	
Roof	0
Other Roof	0
Ceiling	11,019
Window	9,739
Door	819
Wall	2,370
Below-Grade Wall	0
Other Wall	2,370
Partition	22,327
Exterior Floor	1
Internal Floor	11,018
Slab	0
Other Floor	11,018

RTU-04

Coil Peak	
Peak Time (Mo/D/H:M):	8/21/14:00
Outside Air (DB/WB/HR):	90.3 / 73.3 / 96.6

	Instant Sensible (Btu/h)	Time Delay Sensible (Btu/h)	Latent (Btu/h)	Total (Btu/h)	Percent of Total (%)	Btu/h per ft²
Roof	0	0	0	0	0.0	0.0
Other Roof	0	0	0	0	0.0	0.0
Glass	39,655	65,249	0	104,905	34.1	10.8
Door	0	-576	0	-576	-0.2	-1.6
Wall	0	244	0	244	0.1	0.1
Below-Grade Wall	0	0	0	0	0.0	0.0
Other Wall	0	0	0	0	0.0	0.0
Partition	0	-7,997	0	-7,997	-2.6	-0.5
Exterior Floor	0	0	0	0	0.0	0.0
Interior Floor	0	-43,941	0	-43,941	-14.3	-4.9
Slab	0	0	0	0	0.0	0.0
Other Floor	0	0	0	0	0.0	0.0
Infiltration	0	0	0	0	0.0	0.0
Envelope Subtotal	39,655	12,979	00	52,634	17.1	-
People	10,881	23,559	24,520	58,959	19.2	7.0
Lights	7,736	18,438	0	26,175	8.5	4.1
RA Sensible (Lights)	7,720	0	0	7,720	2.5	0.0
Miscellaneous Loads	54,420	62,882	0	117,301	38.1	13.9
Internal Subtotal	80,757	104,879	24,520	210,156	68.3	-
Ventilation	20,193	0	25,511	45,704	14.9	-
DOAS Direct to Zone	0	0	0	0	0.0	-
Ceiling	0	-3,470	0	-3,470	-1.1	-0.4
Refrigeration	0	0	0	0	0.0	0.0
Service Water	0	0	0	0	0.0	0.0
HVAC Equipment Losses	0	0	0	0	0.0	0.0
Adj Air Transfer Heat	0	0	0	0	0.0	0.0
Supply Fan Heat	21,525	0	-	21,525	7.0	-
Time Delay Correction	0	-24,949	-	-24,949	-8.1	-
Sizing Factor Correction	6,353	-	-	6,353	2.1	-
Airflow Correction	-116	0	-67	-184	-0.1	-
Grand Total	168,368	89,439	49,963	307,770	100.0	

Fan Peak	
Peak Time (Mo/D/H:M):	9/21/14:00
Outside Air (DB/WB/HR):	84.2 / 68.6 / 80.3

	Instant Sensible (Btu/h)	Time Delay Sensible (Btu/h)	Total Sensible (Btu/h)	Percent of Total (%)	Related Area (ft²)
Roof	0	0	0	0.0	0
Other Roof	0	0	0	0.0	0
Glass	39,329	89,897	129,226	62.0	9,677
Door	0	-619	-619	-0.3	351
Wall	0	153	153	0.1	2,340
Below-Grade Wall	0	0	0	0.0	0
Other Wall	0	0	0	0.0	2,340
Partition	0	-8,472	-8,472	-4.1	14,869
Exterior Floor	0	0	0	0.0	0
Interior Floor	0	-55,697	-55,697	-26.7	9,057
Slab	0	0	0	0.0	0
Other Floor	0	0	0	0.0	9,057
Infiltration	0	0	0	0.0	2,340
Envelope Subtotal	39,329	25,262	64,590	31.0	-
People	10,881	23,559	34,440	16.5	8,470
Lights	7,736	18,438	26,175	12.6	8,470
RA Sensible (Lights)	-	-	-	-	-
Miscellaneous Loads	54,420	62,882	117,302	56.3	8,470
Internal Subtotal	73,037	104,879	177,916	85.4	-
Ventilation	-	-	-	-	-
DOAS Direct to Zone			0	0.0	0
Ceiling	0	-8,915	-8,915	-4.3	9,057
Refrigeration			0	0.0	8,470
Service Water			0	0.0	8,470
HVAC Equipment Losses			0	0.0	0
Adj Air Transfer Heat	0	0	0	0.0	0
Supply Fan Heat	-	-	-	-	-
Time Delay Correction	0	-24,948	-24,948	-12.0	-
Sizing Factor Correction	6,580	-	6,580	3.2	-
Airflow Correction	-6,855	-	-6,855	-3.3	-
Grand Total	112,092	96,277	208,369	100.0	

Temperatures °F	
Supply	55.0
Return	75.9
Mixed Air	77.7
Fan Heat TD	2.1

Airflows cfm	
Main Fan	9,548
Ventilation	1,207
Infiltration	0
Min Stop / Reheat	3,489

Engineering Checks	
% OA	12.64
cfm/ft²	1.13
Btu/h-ft²	36.36
cfm/ton	372.32
ft²/ton	330.23
People	97
ft²/person	87.54

Areas ft²	
Roof	0
Other Roof	0
Ceiling	9,057
Window	9,677
Door	351
Wall	2,340
Below-Grade Wall	0
Other Wall	2,340
Partition	14,869
Exterior Floor	0
Internal Floor	9,057
Slab	0
Other Floor	9,057

System Heating Checksums

RTU-01

Coil Peak	
Peak Time (Mo/D/H:M):	1/21/24:00
Outside Air (DB/WB/HR):	16.4 / 12.6 / 5.3

	Instant Sensible (Btu/h)	Time Delay Sensible (Btu/h)	Latent (Btu/h)	Total (Btu/h)	Percent of Total (%)	Btu/h per ft²
Roof	0	0	0	0	0.0	0.0
Other Roof	0	0	0	0	0.0	0.0
Glass	-30,248	0	0	-30,248	22.1	-4.0
Door	0	84	0	84	-0.1	0.1
Wall	0	-3,438	0	-3,438	2.5	-1.5
Below-Grade Wall	0	0	0	0	0.0	0.0
Other Wall	0	0	0	0	0.0	0.0
Partition	0	1,786	0	1,786	-1.3	0.1
Exterior Floor	0	0	0	0	0.0	0.0
Interior Floor	0	0	0	0	0.0	0.0
Slab	0	19	0	19	0.0	0.0
Other Floor	0	0	0	0	0.0	0.0
Infiltration	0	0	0	0	0.0	0.0
Envelope Subtotal	-30,248	-1,549	00	-31,797	23.2	-
People	0	0	0	0	0.0	0.0
Lights	0	0	0	0	0.0	0.0
RA Sensible (Lights)	263	0	0	263	-0.2	0.0
Miscellaneous Loads	0	0	0	0	0.0	0.0
Internal Subtotal	263	0	0	263	-0.2	-
Ventilation	-65,551	0	38	-65,513	47.9	-
DOAS Direct to Zone	0	0	0	0	0.0	-
Ceiling	0	-5,454	0	-5,454	4.0	-0.5
Refrigeration	0	0	0	0	0.0	0.0
Service Water	0	0	0	0	0.0	0.0
HVAC Equipment Losses	0	0	0	0	0.0	0.0
Adj Air Transfer Heat	0	0	0	0	0.0	0.0
Supply Fan Heat	0	0	-	0	0.0	-
Time Delay Correction	0	1	-	1	0.0	-
Sizing Factor Correction	-1,538	-	-	-1,538	1.1	-
Airflow Correction	-32,759	0	0	-32,759	23.9	-
Grand Total	-129,833	-7,002	38	-136,797	100.0	

Fan Peak	
Peak Time (Mo/D/H:M):	9/21/14:00
Outside Air (DB/WB/HR):	84.2 / 68.6 / 80.3

	Instant Sensible (Btu/h)	Time Delay Sensible (Btu/h)	Total Sensible (Btu/h)	Percent of Total (%)	Related Area (ft²)
Roof	0	0	0	0.0	0
Other Roof	0	0	0	0.0	0
Glass	30,977	31,245	62,222	38.5	7,649
Door	0	64	64	0.0	1,061
Wall	0	2,336	2,336	1.4	2,291
Below-Grade Wall	0	0	0	0.0	0
Other Wall	0	0	0	0.0	2,291
Partition	0	2,571	2,571	1.6	22,487
Exterior Floor	0	0	0	0.0	0
Interior Floor	0	0	0	0.0	0
Slab	0	-9,204	-9,204	-5.7	10,933
Other Floor	0	0	0	0.0	0
Infiltration	0	0	0	0.0	2,291
Envelope Subtotal	30,977	27,013	57,990	35.8	-
People	8,944	10,222	19,166	11.8	10,095
Lights	8,677	11,899	20,575	12.7	10,095
RA Sensible (Lights)	-	-	-	-	-
Miscellaneous Loads	44,466	28,435	72,900	45.1	10,095
Internal Subtotal	62,086	50,556	112,642	69.6	-
Ventilation	-	-	-	-	-
DOAS Direct to Zone			0	0.0	0
Ceiling	0	81	81	0.0	10,933
Refrigeration			0	0.0	10,095
Service Water			0	0.0	10,095
HVAC Equipment Losses			0	0.0	0
Adj Air Transfer Heat	0	0	0	0.0	0
Supply Fan Heat	-	-	-	-	-
Time Delay Correction	0	-8,492	-8,492	-5.2	-
Sizing Factor Correction	2,556	-	2,556	1.6	-
Airflow Correction	-2,985	-	-2,985	-1.8	-
Grand Total	92,635	69,157	161,792	100.0	

Temperatures °F	
Supply	90.0
Return	70.0
Mixed Air	52.0
Fan Heat TD	0.0

Airflows cfm	
Main Fan	7,407
Ventilation	955
Infiltration	0
Min Stop / Reheat	3,365

Engineering Checks	
% OA	15.26
cfm/ft²	.73
Btu/h-ft²	-13.56
cfm/ton	-649.84
ft²/ton	-885.49
People	81
ft²/person	124.40

Areas ft²	
Roof	0
Other Roof	0
Ceiling	10,933
Window	7,649
Door	1,061
Wall	2,291
Below-Grade Wall	0
Other Wall	2,291
Partition	22,487
Exterior Floor	0
Internal Floor	0
Slab	10,933
Other Floor	0

RTU-02

Coil Peak
Peak Time (Mo/D/H:M): 1/21/24:00
Outside Air (DB/WB/HR): 16.4 / 12.6 / 5.3

	Instant Sensible (Btu/h)	Time Delay Sensible (Btu/h)	Latent (Btu/h)	Total (Btu/h)	Percent of Total (%)	Btu/h per ft²
Roof	0	0	0	0	0.0	0.0
Other Roof	0	0	0	0	0.0	0.0
Glass	-34,245	0	0	-34,245	17.5	-4.1
Door	0	196	0	196	-0.1	0.4
Wall	0	-3,098	0	-3,098	1.6	-1.3
Below-Grade Wall	0	0	0	0	0.0	0.0
Other Wall	0	0	0	0	0.0	0.0
Partition	0	1,966	0	1,966	-1.0	0.1
Exterior Floor	0	0	0	0	0.0	0.0
Interior Floor	0	0	0	0	0.0	0.0
Slab	0	45	0	45	0.0	0.0
Other Floor	0	0	0	0	0.0	0.0
Infiltration	0	0	0	0	0.0	0.0
Envelope Subtotal	-34,245	-891	00	-35,136	17.9	-
People	0	0	0	0	0.0	0.0
Lights	0	0	0	0	0.0	0.0
RA Sensible (Lights)	-6,128	0	0	-6,128	3.1	0.0
Miscellaneous Loads	0	0	0	0	0.0	0.0
Internal Subtotal	-6,128	0	0	-6,128	3.1	-
Ventilation	-76,844	0	587	-76,257	39.0	-
DOAS Direct to Zone	0	0	0	0	0.0	-
Ceiling	0	-4,431	0	-4,431	2.3	-0.5
Refrigeration	0	0	0	0	0.0	0.0
Service Water	0	0	0	0	0.0	0.0
HVAC Equipment Losses	0	0	0	0	0.0	0.0
Adj Air Transfer Heat	0	0	0	0	0.0	0.0
Supply Fan Heat	0	0	-	0	0.0	-
Time Delay Correction	0	-186	-	-186	0.1	-
Sizing Factor Correction	-648	-	-	-648	0.3	-
Airflow Correction	-72,992	0	0	-72,992	37.3	-
Grand Total	-190,857	-5,508	587	-195,778	100.0	

Fan Peak
Peak Time (Mo/D/H:M): 7/21/17:40
Outside Air (DB/WB/HR): 86.4 / 72.7 / 99.5

	Instant Sensible (Btu/h)	Time Delay Sensible (Btu/h)	Total Sensible (Btu/h)	Percent of Total (%)	Related Area (ft²)
Roof	0	0	0	0.0	0
Other Roof	0	0	0	0.0	0
Glass	22,651	20,748	43,399	29.8	8,313
Door	0	251	251	0.2	526
Wall	0	1,195	1,195	0.8	2,367
Below-Grade Wall	0	0	0	0.0	0
Other Wall	0	0	0	0.0	2,367
Partition	0	2,021	2,021	1.4	16,565
Exterior Floor	0	0	0	0.0	0
Interior Floor	0	0	0	0.0	0
Slab	0	-6,709	-6,709	-4.6	8,696
Other Floor	0	0	0	0.0	0
Infiltration	0	0	0	0.0	2,367
Envelope Subtotal	22,651	17,506	40,157	27.6	-
People	18,673	23,568	42,241	29.0	8,073
Lights	7,596	10,557	18,153	12.5	8,073
RA Sensible (Lights)	-	-	-	-	-
Miscellaneous Loads	27,086	18,355	45,441	31.2	8,073
Internal Subtotal	53,355	52,480	105,835	72.7	-
Ventilation	-	-	-	-	-
DOAS Direct to Zone			0	0.0	0
Ceiling	0	-4,194	-4,194	-2.9	8,696
Refrigeration			0	0.0	8,073
Service Water			0	0.0	8,073
HVAC Equipment Losses			0	0.0	0
Adj Air Transfer Heat	0	0	0	0.0	0
Supply Fan Heat	-	-	-	-	-
Time Delay Correction	0	-9,325	-9,325	-6.4	-
Sizing Factor Correction	519	-	519	0.4	-
Airflow Correction	12,535	-	12,535	8.6	-
Grand Total	89,060	56,468	145,527	100.0	

Temperatures °F	
Supply	90.0
Return	70.5
Mixed Air	53.3
Fan Heat TD	0.0

Airflows cfm	
Main Fan	6,644
Ventilation	1,291
Infiltration	0
Min Stop / Reheat	4,483

Engineering Checks	
% OA	21.44
cfm/ft²	.82
Btu/h-ft²	-24.27
cfm/ton	-407.32
ft²/ton	-494.81
People	176
ft²/person	45.86

Areas ft²	
Roof	0
Other Roof	0
Ceiling	8,696
Window	8,313
Door	526
Wall	2,367
Below-Grade Wall	0
Other Wall	2,367
Partition	16,565
Exterior Floor	0
Internal Floor	0
Slab	8,696
Other Floor	0

RTU-03

Coil Peak
Peak Time (Mo/D/H:M): 1/21/24:00
Outside Air (DB/WB/HR): 16.4 / 12.6 / 5.3

Fan Peak
Peak Time (Mo/D/H:M): 7/21/16:00
Outside Air (DB/WB/HR): 89.4 / 73.5 / 99.5

	Instant Sensible (Btu/h)	Time Delay Sensible (Btu/h)	Latent (Btu/h)	Total (Btu/h)	Percent of Total (%)	Btu/h per ft²	Instant Sensible (Btu/h)	Time Delay Sensible (Btu/h)	Total Sensible (Btu/h)	Percent of Total (%)	Related Area (ft²)
Roof	0	0	0	0	0.0	0.0	0	0	0	0.0	0
Other Roof	0	0	0	0	0.0	0.0	0	0	0	0.0	0
Glass	-34,843	0	0	-34,843	23.1	-3.6	23,671	43,667	67,339	37.0	9,739
Door	0	157	0	157	-0.1	0.2	0	-782	-782	-0.4	819
Wall	0	-3,090	0	-3,090	2.0	-1.3	0	-299	-299	-0.2	2,370
Below-Grade Wall	0	0	0	0	0.0	0.0	0	0	0	0.0	0
Other Wall	0	0	0	0	0.0	0.0	0	0	0	0.0	2,370
Partition	0	145	0	145	-0.1	0.0	0	-11,194	-11,194	-6.1	22,327
Exterior Floor	0	-2	0	-2	0.0	-1.8	0	-1	-1	0.0	1
Interior Floor	0	846	0	846	-0.6	0.1	0	-29,915	-29,915	-16.4	11,018
Slab	0	0	0	0	0.0	0.0	0	0	0	0.0	0
Other Floor	0	0	0	0	0.0	0.0	0	0	0	0.0	11,018
Infiltration	0	0	0	0	0.0	0.0	0	0	0	0.0	2,370
Envelope Subtotal	-34,843	-1,945	00	-36,787	24.4	-	23,671	1,475	25,146	13.8	-
People	0	0	0	0	0.0	0.0	10,689	26,093	36,781	20.2	10,176
Lights	0	0	0	0	0.0	0.0	8,852	23,761	32,614	17.9	10,176
RA Sensible (Lights)	0	0	0	0	0.0	0.0	-	-	-	-	-
Miscellaneous Loads	0	0	0	0	0.0	0.0	40,732	52,078	92,810	50.9	10,176
Internal Subtotal	0	0	0	0	0.0	-	60,273	101,932	162,205	89.0	-
Ventilation	-68,925	0	58	-68,867	45.6	-	-	-	-	-	-
DOAS Direct to Zone	0	0	0	0	0.0	-			0	0.0	0
Ceiling	0	-27,441	0	-27,441	18.2	-2.5	0	4,826	4,826	2.6	11,019
Refrigeration	0	0	0	0	0.0	0.0			0	0.0	10,176
Service Water	0	0	0	0	0.0	0.0			0	0.0	10,176
HVAC Equipment Losses	0	0	0	0	0.0	0.0			0	0.0	0
Adj Air Transfer Heat	0	0	0	0	0.0	0.0	0	0	0	0.0	0
Supply Fan Heat	0	0	-	0	0.0	-	-	-	-	-	-
Time Delay Correction	0	0	-	0	0.0	-	0	-15,904	-15,904	-8.7	-
Sizing Factor Correction	0	-	-	0	0.0	-	3,410	-	3,410	1.9	-
Airflow Correction	-17,917	0	0	-17,917	11.9	-	2,517	-	2,517	1.4	-
Grand Total	-121,685	-29,386	58	-151,012	100.0		89,872	92,329	182,201	100.0	

Temperatures °F	
Supply	90.0
Return	70.0
Mixed Air	53.2
Fan Heat TD	0.0

Airflows cfm	
Main Fan	8,341
Ventilation	1,021
Infiltration	0
Min Stop / Reheat	3,815

Engineering Checks	
% OA	14.32
cfm/ft²	.82
Btu/h-ft²	-14.85
cfm/ton	-662.92
ft²/ton	-808.60
People	98
ft²/person	104.02

Areas ft²	
Roof	0
Other Roof	0
Ceiling	11,019
Window	9,739
Door	819
Wall	2,370
Below-Grade Wall	0
Other Wall	2,370
Partition	22,327
Exterior Floor	1
Internal Floor	11,018
Slab	0
Other Floor	11,018

RTU-04

Coil Peak						
Peak Time (Mo/D/H:M):				1/21/24:00		
Outside Air (DB/WB/HR):				16.4 / 12.6 / 5.3		
	Instant Sensible (Btu/h)	Time Delay Sensible (Btu/h)	Latent (Btu/h)	Total (Btu/h)	Percent of Total (%)	Btu/h per ft²
Roof	0	0	0	0	0.0	0.0
Other Roof	0	0	0	0	0.0	0.0
Glass	-32,765	0	0	-32,765	22.6	-3.4
Door	0	-9	0	-9	0.0	0.0
Wall	0	-3,052	0	-3,052	2.1	-1.3
Below-Grade Wall	0	0	0	0	0.0	0.0
Other Wall	0	0	0	0	0.0	0.0
Partition	0	-497	0	-497	0.3	0.0
Exterior Floor	0	0	0	0	0.0	0.0
Interior Floor	0	702	0	702	-0.5	0.1
Slab	0	0	0	0	0.0	0.0
Other Floor	0	0	0	0	0.0	0.0
Infiltration	0	0	0	0	0.0	0.0
Envelope Subtotal	-32,765	-2,857	00	-35,622	24.6	-
People	0	0	0	0	0.0	0.0
Lights	0	0	0	0	0.0	0.0
RA Sensible (Lights)	0	0	0	0	0.0	0.0
Miscellaneous Loads	0	0	0	0	0.0	0.0
Internal Subtotal	0	0	0	0	0.0	-
Ventilation	-69,660	0	59	-69,601	48.1	-
DOAS Direct to Zone	0	0	0	0	0.0	-
Ceiling	0	-23,346	0	-23,346	16.1	-2.6
Refrigeration	0	0	0	0	0.0	0.0
Service Water	0	0	0	0	0.0	0.0
HVAC Equipment Losses	0	0	0	0	0.0	0.0
Adj Air Transfer Heat	0	0	0	0	0.0	0.0
Supply Fan Heat	0	0	-	0	0.0	-
Time Delay Correction	0	0	-	0	0.0	-
Sizing Factor Correction	0	-	-	0	0.0	-
Airflow Correction	-16,155	0	0	-16,155	11.2	-
Grand Total	-118,579	-26,202	59	-144,723	100.0	

Fan Peak					
Peak Time (Mo/D/H:M):				9/21/14:00	
Outside Air (DB/WB/HR):				84.2 / 68.6 / 80.3	
	Instant Sensible (Btu/h)	Time Delay Sensible (Btu/h)	Total Sensible (Btu/h)	Percent of Total (%)	Related Area (ft²)
Roof	0	0	0	0.0	0
Other Roof	0	0	0	0.0	0
Glass	39,329	89,897	129,226	62.0	9,677
Door	0	-619	-619	-0.3	351
Wall	0	153	153	0.1	2,340
Below-Grade Wall	0	0	0	0.0	0
Other Wall	0	0	0	0.0	2,340
Partition	0	-8,472	-8,472	-4.1	14,869
Exterior Floor	0	0	0	0.0	0
Interior Floor	0	-55,697	-55,697	-26.7	9,057
Slab	0	0	0	0.0	0
Other Floor	0	0	0	0.0	9,057
Infiltration	0	0	0	0.0	2,340
Envelope Subtotal	39,329	25,262	64,590	31.0	-
People	10,881	23,559	34,440	16.5	8,470
Lights	7,736	18,438	26,175	12.6	8,470
RA Sensible (Lights)	-	-	-	-	-
Miscellaneous Loads	54,420	62,882	117,302	56.3	8,470
Internal Subtotal	73,037	104,879	177,916	85.4	-
Ventilation	-	-	-	-	-
DOAS Direct to Zone			0	0.0	0
Ceiling	0	-8,915	-8,915	-4.3	9,057
Refrigeration			0	0.0	8,470
Service Water			0	0.0	8,470
HVAC Equipment Losses			0	0.0	0
Adj Air Transfer Heat	0	0	0	0.0	0
Supply Fan Heat	-	-	-	-	-
Time Delay Correction	0	-24,948	-24,948	-12.0	-
Sizing Factor Correction	6,580	-	6,580	3.2	-
Airflow Correction	-6,855	-	-6,855	-3.3	-
Grand Total	112,092	96,277	208,369	100.0	

Temperatures °F	
Supply	90.0
Return	70.0
Mixed Air	51.5
Fan Heat TD	0.0

Airflows cfm	
Main Fan	9,548
Ventilation	990
Infiltration	0
Min Stop / Reheat	3,489

Engineering Checks	
% OA	12.64
cfm/ft²	1.13
Btu/h-ft²	-17.10
cfm/ton	-791.79
ft²/ton	-702.27
People	97
ft²/person	87.54

Areas ft²	
Roof	0
Other Roof	0
Ceiling	9,057
Window	9,677
Door	351
Wall	2,340
Below-Grade Wall	0
Other Wall	2,340
Partition	14,869
Exterior Floor	0
Internal Floor	9,057
Slab	0
Other Floor	9,057

Zone Cooling and Heating Loads by Component

ZONE_VAV-1-01

Conditions at Time of Cooling Peak

Outside	DB / WB / HR	90.3 °F	/	73.3 °F	/	96.6 gr/lb
Zone	DB / RH / HR	75.0 °F	/	50.9 %	/	65.9 gr/lb

	Instant Sensible (Btu/h)	Time Delay Sensible (Btu/h)	Latent (Btu/h)	Total (Btu/h)	Percent of Total (%)
Roof	0	0	0	0	0.0
Other Roof	0	0	0	0	0.0
Glass	0	0	0	0	0.0
Door	0	24	0	24	0.5
Wall	0	0	0	0	0.0
Below-Grade Wall	0	0	0	0	0.0
Other Wall	0	0	0	0	0.0
Partition	0	327	0	327	6.7
Exterior Floor	0	0	0	0	0.0
Interior Floor	0	0	0	0	0.0
Slab	0	3	0	3	0.1
Other Floor	0	0	0	0	0.0
Infiltration	0	0	0	0	0.0
Envelope Subtotal	0	354	0	354	-
People	210	259	400	869	17.8
Lights	307	493	0	800	16.4
RA Sensible (Lights)	352	0	0	352	7.2
Miscellaneous Loads	1434	986	0	2419	49.5
Internal Subtotal	2303	1737	400	4440	-
RA (All Other)	0	0	0	0	0.0
DOA Direct to Zone	0	0	0	0	0.0
Ceiling	0	97	0	97	2.0
Refrigeration	0	0	0	0	0.0
Service Water	0	0	0	0	0.0
HVAC Equipment Losses	0	0	0	0	0.0
Adj Air Transfer Heat	0	0	0	0	0.0
Sizing Factor Correction	0	0	0	0	0.0
Time Delay Correction	0	-3	0	-3	-0.1
Grand Total	2303	2185	400	4887	100.0

Engineering Checks

Cooling tons	0.41	Input Ventilation cfm	28
Cooling cfm	311.25	Calculated Ventilation cfm	48
ft²/ton	737.16	Number of People	2.00
cfm/ton	764.06	People per 1000 ft²	7
Conditioned ft²	300.2		

Conditions at Time of Heating Peak

Outside	DB / WB / HR	32.0 °F	/	32.0 °F	/	0.0 gr/lb
Zone	DB / RH / HR	32.0 °F	/	0.0 %	/	0.0 gr/lb

	Instant Sensible (Btu/h)	Time Delay Sensible (Btu/h)	Latent (Btu/h)	Total (Btu/h)	Percent of Total (%)
Roof	0	0	0	0	0.0
Other Roof	0	0	0	0	0.0
Glass	0	0	0	0	0.0
Door	0	0	0	0	0.0
Wall	0	0	0	0	0.0
Below-Grade Wall	0	0	0	0	0.0
Other Wall	0	0	0	0	0.0
Partition	0	0	0	0	0.0
Exterior Floor	0	0	0	0	0.0
Interior Floor	0	0	0	0	0.0
Slab	0	0	0	0	0.0
Other Floor	0	0	0	0	0.0
Infiltration	0	0	0	0	0.0
Envelope Subtotal	0	0	0	0	-
People	0	0	0	0	0.0
Lights	0	0	0	0	0.0
RA Sensible (Lights)	0	0	0	0	0.0
Miscellaneous Loads	0	0	0	0	0.0
Internal Subtotal	0	0	0	0	-
RA (All Other)	0	0	0	0	0.0
DOA Direct to Zone	0	0	0	0	0.0
Ceiling	0	0	0	0	0.0
Refrigeration	0	0	0	0	0.0
Service Water	0	0	0	0	0.0
HVAC Equipment Losses	0	0	0	0	0.0
Adj Air Transfer Heat	0	0	0	0	0.0
Sizing Factor Correction	0	0	0	0	0.0
Time Delay Correction	0	0	0	0	0.0
Grand Total	0	0	0	0	100.0

Engineering Checks

Heating Mbh	0.00	Input Ventilation cfm	28
Heating cfm	93.37	Calculated Ventilation cfm	27
ft²/Mbh	0.00	Number of People	2.00
cfm/Mbh	0.00	People per 1000 ft²	7
Conditioned ft²	300.2		

ZONE_VAV-1-02

Conditions at Time of Cooling Peak

Outside	DB / WB / HR	84.2 °F	/	68.6 °F	/	80.3 gr/lb
Zone	DB / RH / HR	75.0 °F	/	51.0 %	/	65.9 gr/lb

	Instant Sensible (Btu/h)	Time Delay Sensible (Btu/h)	Latent (Btu/h)	Total (Btu/h)	Percent of Total (%)
Roof	0	0	0	0	0.0
Other Roof	0	0	0	0	0.0
Glass	0	0	0	0	0.0
Door	0	9	0	9	0.4
Wall	0	0	0	0	0.0
Below-Grade Wall	0	0	0	0	0.0
Other Wall	0	0	0	0	0.0
Partition	0	167	0	167	7.0
Exterior Floor	0	0	0	0	0.0
Interior Floor	0	0	0	0	0.0
Slab	0	-4	0	-4	-0.2
Other Floor	0	0	0	0	0.0
Infiltration	0	0	0	0	0.0
Envelope Subtotal	0	172	0	172	-
People	105	130	200	435	18.2
Lights	148	241	0	389	16.3
RA Sensible (Lights)	170	0	0	170	7.1
Miscellaneous Loads	706	492	0	1198	50.2
Internal Subtotal	1130	863	200	2193	-
RA (All Other)	0	0	0	0	0.0
DOA Direct to Zone	0	0	0	0	0.0
Ceiling	0	26	0	26	1.1
Refrigeration	0	0	0	0	0.0
Service Water	0	0	0	0	0.0
HVAC Equipment Losses	0	0	0	0	0.0
Adj Air Transfer Heat	0	0	0	0	0.0
Sizing Factor Correction	0	0	0	0	0.0
Time Delay Correction	0	-2	0	-2	-0.1
Grand Total	1130	1060	200	2390	100.0

Engineering Checks

Cooling tons	0.20	Input Ventilation cfm	14
Cooling cfm	152.23	Calculated Ventilation cfm	23
ft²/ton	728.16	Number of People	1.00
cfm/ton	764.32	People per 1000 ft²	7
Conditioned ft²	145.0		

Conditions at Time of Heating Peak

Outside	DB / WB / HR	32.0 °F	/	32.0 °F	/	0.0 gr/lb
Zone	DB / RH / HR	32.0 °F	/	0.0 %	/	0.0 gr/lb

	Instant Sensible (Btu/h)	Time Delay Sensible (Btu/h)	Latent (Btu/h)	Total (Btu/h)	Percent of Total (%)
Roof	0	0	0	0	0.0
Other Roof	0	0	0	0	0.0
Glass	0	0	0	0	0.0
Door	0	0	0	0	0.0
Wall	0	0	0	0	0.0
Below-Grade Wall	0	0	0	0	0.0
Other Wall	0	0	0	0	0.0
Partition	0	0	0	0	0.0
Exterior Floor	0	0	0	0	0.0
Interior Floor	0	0	0	0	0.0
Slab	0	0	0	0	0.0
Other Floor	0	0	0	0	0.0
Infiltration	0	0	0	0	0.0
Envelope Subtotal	0	0	0	0	-
People	0	0	0	0	0.0
Lights	0	0	0	0	0.0
RA Sensible (Lights)	0	0	0	0	0.0
Miscellaneous Loads	0	0	0	0	0.0
Internal Subtotal	0	0	0	0	-
RA (All Other)	0	0	0	0	0.0
DOA Direct to Zone	0	0	0	0	0.0
Ceiling	0	0	0	0	0.0
Refrigeration	0	0	0	0	0.0
Service Water	0	0	0	0	0.0
HVAC Equipment Losses	0	0	0	0	0.0
Adj Air Transfer Heat	0	0	0	0	0.0
Sizing Factor Correction	0	0	0	0	0.0
Time Delay Correction	0	0	0	0	0.0
Grand Total	0	0	0	0	100.0

Engineering Checks

Heating Mbh	0.00	Input Ventilation cfm	14
Heating cfm	45.67	Calculated Ventilation cfm	13
ft²/Mbh	0.00	Number of People	1.00
cfm/Mbh	0.00	People per 1000 ft²	7
Conditioned ft²	145.0		

ZONE_VAV-1-03

Conditions at Time of Cooling Peak

Outside	DB / WB / HR	74.0 °F	/	62.2 °F	/	65.2 gr/lb
Zone	DB / RH / HR	75.0 °F	/	50.7 %	/	65.5 gr/lb

	Instant Sensible (Btu/h)	Time Delay Sensible (Btu/h)	Latent (Btu/h)	Total (Btu/h)	Percent of Total (%)
Roof	0	0	0	0	0.0
Other Roof	0	0	0	0	0.0
Glass	4921	5197	0	10118	47.2
Door	0	-127	0	-127	-0.6
Wall	0	342	0	342	1.6
Below-Grade Wall	0	0	0	0	0.0
Other Wall	0	0	0	0	0.0
Partition	0	-706	0	-706	-3.3
Exterior Floor	0	0	0	0	0.0
Interior Floor	0	0	0	0	0.0
Slab	0	-1212	0	-1212	-5.7
Other Floor	0	0	0	0	0.0
Infiltration	0	0	0	0	0.0
Envelope Subtotal	4921	3493	0	8414	-
People	840	915	1600	3354	15.6
Lights	952	1173	0	2125	9.9
RA Sensible (Lights)	1093	0	0	1093	5.1
Miscellaneous Loads	4877	3027	0	7904	36.9
Internal Subtotal	7762	5115	1600	14477	-
RA (All Other)	0	0	0	0	0.0
DOA Direct to Zone	0	0	0	0	0.0
Ceiling	0	-113	0	-113	-0.5
Refrigeration	0	0	0	0	0.0
Service Water	0	0	0	0	0.0
HVAC Equipment Losses	0	0	0	0	0.0
Adj Air Transfer Heat	0	0	0	0	0.0
Sizing Factor Correction	0	0	0	0	0.0
Time Delay Correction	0	-1335	0	-1335	-6.2
Grand Total	12683	7161	1600	21443	100.0

Engineering Checks

Cooling tons	1.79	Input Ventilation cfm	111
Cooling cfm	1,235.62	Calculated Ventilation cfm	189
ft²/ton	664.18	Number of People	8.00
cfm/ton	691.34	People per 1000 ft²	7
Conditioned ft²	1186.7		

Conditions at Time of Heating Peak

Outside	DB / WB / HR	16.4 °F	/	12.6 °F	/	5.3 gr/lb
Zone	DB / RH / HR	70.0 °F	/	4.9 %	/	5.2 gr/lb

	Instant Sensible (Btu/h)	Time Delay Sensible (Btu/h)	Latent (Btu/h)	Total (Btu/h)	Percent of Total (%)
Roof	0	0	0	0	0.0
Other Roof	0	0	0	0	0.0
Glass	-3879	0	0	-3879	79.8
Door	0	86	0	86	-1.8
Wall	0	-294	0	-294	6.0
Below-Grade Wall	0	0	0	0	0.0
Other Wall	0	0	0	0	0.0
Partition	0	478	0	478	-9.8
Exterior Floor	0	0	0	0	0.0
Interior Floor	0	0	0	0	0.0
Slab	0	-7	0	-7	0.1
Other Floor	0	0	0	0	0.0
Infiltration	0	0	0	0	0.0
Envelope Subtotal	-3879	263	0	-3616	-
People	0	0	0	0	0.0
Lights	0	0	0	0	0.0
RA Sensible (Lights)	0	0	0	0	0.0
Miscellaneous Loads	0	0	0	0	0.0
Internal Subtotal	0	0	0	0	-
RA (All Other)	0	0	0	0	0.0
DOA Direct to Zone	0	0	0	0	0.0
Ceiling	0	-543	0	-543	11.2
Refrigeration	0	0	0	0	0.0
Service Water	0	0	0	0	0.0
HVAC Equipment Losses	0	0	0	0	0.0
Adj Air Transfer Heat	0	0	0	0	0.0
Sizing Factor Correction	-704	0	0	-704	14.5
Time Delay Correction	0	0	0	0	0.0
Grand Total	-4583	-280	0	-4863	100.0

Engineering Checks

Heating Mbh	-4.86	Input Ventilation cfm	111
Heating cfm	370.69	Calculated Ventilation cfm	105
ft²/Mbh	-244.05	Number of People	8.00
cfm/Mbh	-76.22	People per 1000 ft²	7
Conditioned ft²	1186.7		

ZONE_VAV-1-04

Conditions at Time of Cooling Peak

Outside	DB / WB / HR	83.3 °F	/	71.3 °F	/	96.6 gr/lb
Zone	DB / RH / HR	75.0 °F	/	51.0 %	/	65.9 gr/lb

	Instant Sensible (Btu/h)	Time Delay Sensible (Btu/h)	Latent (Btu/h)	Total (Btu/h)	Percent of Total (%)
Roof	0	0	0	0	0.0
Other Roof	0	0	0	0	0.0
Glass	6872	6909	0	13782	50.6
Door	0	10	0	10	0.0
Wall	0	709	0	709	2.6
Below-Grade Wall	0	0	0	0	0.0
Other Wall	0	0	0	0	0.0
Partition	0	361	0	361	1.3
Exterior Floor	0	0	0	0	0.0
Interior Floor	0	0	0	0	0.0
Slab	0	-2013	0	-2013	-7.4
Other Floor	0	0	0	0	0.0
Infiltration	0	0	0	0	0.0
Envelope Subtotal	6872	5977	0	12849	-
People	999	954	2343	4296	15.8
Lights	953	1097	0	2050	7.5
RA Sensible (Lights)	1094	0	0	1094	4.0
Miscellaneous Loads	5081	2881	0	7962	29.2
Internal Subtotal	8127	4932	2343	15402	-
RA (All Other)	0	0	0	0	0.0
DOA Direct to Zone	0	0	0	0	0.0
Ceiling	0	155	0	155	0.6
Refrigeration	0	0	0	0	0.0
Service Water	0	0	0	0	0.0
HVAC Equipment Losses	0	0	0	0	0.0
Adj Air Transfer Heat	0	0	0	0	0.0
Sizing Factor Correction	0	0	0	0	0.0
Time Delay Correction	0	-1156	0	-1156	-4.2
Grand Total	15000	9908	2343	27251	100.0

Engineering Checks

Cooling tons	2.27	Input Ventilation cfm	112
Cooling cfm	1,243.95	Calculated Ventilation cfm	190
ft²/ton	501.77	Number of People	8.72
cfm/ton	547.68	People per 1000 ft²	8
Conditioned ft²	1139.4		

Conditions at Time of Heating Peak

Outside	DB / WB / HR	16.4 °F	/	12.6 °F	/	5.3 gr/lb
Zone	DB / RH / HR	70.0 °F	/	4.9 %	/	5.2 gr/lb

	Instant Sensible (Btu/h)	Time Delay Sensible (Btu/h)	Latent (Btu/h)	Total (Btu/h)	Percent of Total (%)
Roof	0	0	0	0	0.0
Other Roof	0	0	0	0	0.0
Glass	-7613	0	0	-7613	88.5
Door	0	141	0	141	-1.6
Wall	0	-744	0	-744	8.6
Below-Grade Wall	0	0	0	0	0.0
Other Wall	0	0	0	0	0.0
Partition	0	400	0	400	-4.6
Exterior Floor	0	0	0	0	0.0
Interior Floor	0	0	0	0	0.0
Slab	0	-8	0	-8	0.1
Other Floor	0	0	0	0	0.0
Infiltration	0	0	0	0	0.0
Envelope Subtotal	-7613	-212	0	-7825	-
People	0	0	0	0	0.0
Lights	0	0	0	0	0.0
RA Sensible (Lights)	0	0	0	0	0.0
Miscellaneous Loads	0	0	0	0	0.0
Internal Subtotal	0	0	0	0	-
RA (All Other)	0	0	0	0	0.0
DOA Direct to Zone	0	0	0	0	0.0
Ceiling	0	-777	0	-777	9.0
Refrigeration	0	0	0	0	0.0
Service Water	0	0	0	0	0.0
HVAC Equipment Losses	0	0	0	0	0.0
Adj Air Transfer Heat	0	0	0	0	0.0
Sizing Factor Correction	0	0	0	0	0.0
Time Delay Correction	0	0	0	0	0.0
Grand Total	-7613	-989	0	-8602	100.0

Engineering Checks

Heating Mbh	-8.60	Input Ventilation cfm	112
Heating cfm	373.19	Calculated Ventilation cfm	106
ft²/Mbh	-132.47	Number of People	8.72
cfm/Mbh	-43.38	People per 1000 ft²	8
Conditioned ft²	1139.4		

ZONE_VAV-1-05

Conditions at Time of Cooling Peak

Outside	DB / WB / HR	84.2 °F	/	68.6 °F	/	80.3 gr/lb
Zone	DB / RH / HR	75.0 °F	/	51.0 %	/	65.9 gr/lb

	Instant Sensible (Btu/h)	Time Delay Sensible (Btu/h)	Latent (Btu/h)	Total (Btu/h)	Percent of Total (%)
Roof	0	0	0	0	0.0
Other Roof	0	0	0	0	0.0
Glass	0	0	0	0	0.0
Door	0	27	0	27	0.6
Wall	0	0	0	0	0.0
Below-Grade Wall	0	0	0	0	0.0
Other Wall	0	0	0	0	0.0
Partition	0	336	0	336	7.0
Exterior Floor	0	0	0	0	0.0
Interior Floor	0	0	0	0	0.0
Slab	0	-18	0	-18	-0.4
Other Floor	0	0	0	0	0.0
Infiltration	0	0	0	0	0.0
Envelope Subtotal	0	345	0	345	-
People	210	260	400	870	18.2
Lights	298	483	0	780	16.3
RA Sensible (Lights)	342	0	0	342	7.2
Miscellaneous Loads	1415	983	0	2398	50.2
Internal Subtotal	2264	1726	400	4390	-
RA (All Other)	0	0	0	0	0.0
DOA Direct to Zone	0	0	0	0	0.0
Ceiling	0	47	0	47	1.0
Refrigeration	0	0	0	0	0.0
Service Water	0	0	0	0	0.0
HVAC Equipment Losses	0	0	0	0	0.0
Adj Air Transfer Heat	0	0	0	0	0.0
Sizing Factor Correction	0	0	0	0	0.0
Time Delay Correction	0	-3	0	-3	-0.1
Grand Total	2264	2115	400	4779	100.0

Engineering Checks

Cooling tons	0.40	Input Ventilation cfm	27
Cooling cfm	305.14	Calculated Ventilation cfm	47
ft²/ton	730.97	Number of People	2.00
cfm/ton	766.12	People per 1000 ft²	7
Conditioned ft²	291.1		

Conditions at Time of Heating Peak

Outside	DB / WB / HR	16.4 °F	/	12.6 °F	/	5.3 gr/lb
Zone	DB / RH / HR	70.0 °F	/	4.9 %	/	5.2 gr/lb

	Instant Sensible (Btu/h)	Time Delay Sensible (Btu/h)	Latent (Btu/h)	Total (Btu/h)	Percent of Total (%)
Roof	0	0	0	0	0.0
Other Roof	0	0	0	0	0.0
Glass	0	0	0	0	0.0
Door	0	-25	0	-25	10.1
Wall	0	0	0	0	0.0
Below-Grade Wall	0	0	0	0	0.0
Other Wall	0	0	0	0	0.0
Partition	0	-100	0	-100	40.2
Exterior Floor	0	0	0	0	0.0
Interior Floor	0	0	0	0	0.0
Slab	0	0	0	0	0.1
Other Floor	0	0	0	0	0.0
Infiltration	0	0	0	0	0.0
Envelope Subtotal	0	-125	0	-125	-
People	0	0	0	0	0.0
Lights	0	0	0	0	0.0
RA Sensible (Lights)	0	0	0	0	0.0
Miscellaneous Loads	0	0	0	0	0.0
Internal Subtotal	0	0	0	0	-
RA (All Other)	0	0	0	0	0.0
DOA Direct to Zone	0	0	0	0	0.0
Ceiling	0	-123	0	-123	49.5
Refrigeration	0	0	0	0	0.0
Service Water	0	0	0	0	0.0
HVAC Equipment Losses	0	0	0	0	0.0
Adj Air Transfer Heat	0	0	0	0	0.0
Sizing Factor Correction	0	0	0	0	0.0
Time Delay Correction	0	0	0	0	0.0
Grand Total	0	-248	0	-248	100.0

Engineering Checks

Heating Mbh	-0.25	Input Ventilation cfm	27
Heating cfm	91.54	Calculated Ventilation cfm	26
ft²/Mbh	-1172.22	Number of People	2.00
cfm/Mbh	-368.65	People per 1000 ft²	7
Conditioned ft²	291.1		

ZONE_VAV-1-06

Conditions at Time of Cooling Peak

Outside	DB / WB / HR	82.5 °F	/	71.6 °F	/	99.4 gr/lb
Zone	DB / RH / HR	75.0 °F	/	63.1 %	/	81.7 gr/lb

	Instant Sensible (Btu/h)	Time Delay Sensible (Btu/h)	Latent (Btu/h)	Total (Btu/h)	Percent of Total (%)
Roof	0	0	0	0	0.0
Other Roof	0	0	0	0	0.0
Glass	0	0	0	0	0.0
Door	0	123	0	123	0.6
Wall	0	0	0	0	0.0
Below-Grade Wall	0	0	0	0	0.0
Other Wall	0	0	0	0	0.0
Partition	0	240	0	240	1.2
Exterior Floor	0	0	0	0	0.0
Interior Floor	0	0	0	0	0.0
Slab	0	-371	0	-371	-1.9
Other Floor	0	0	0	0	0.0
Infiltration	0	0	0	0	0.0
Envelope Subtotal	0	-8	0	-8	-
People	3779	4675	7198	15652	78.2
Lights	810	1221	0	2031	10.1
RA Sensible (Lights)	930	0	0	930	4.6
Miscellaneous Loads	922	596	0	1518	7.6
Internal Subtotal	6441	6492	7198	20131	-
RA (All Other)	0	0	0	0	0.0
DOA Direct to Zone	0	0	0	0	0.0
Ceiling	0	-50	0	-50	-0.2
Refrigeration	0	0	0	0	0.0
Service Water	0	0	0	0	0.0
HVAC Equipment Losses	0	0	0	0	0.0
Adj Air Transfer Heat	0	0	0	0	0.0
Sizing Factor Correction	0	0	0	0	0.0
Time Delay Correction	0	-58	0	-58	-0.3
Grand Total	6441	6376	7198	20016	100.0

Engineering Checks

Cooling tons	1.67	Input Ventilation cfm	223
Cooling cfm	2,476.58	Calculated Ventilation cfm	531
ft²/ton	428.61	Number of People	36.09
cfm/ton	1,484.50	People per 1000 ft²	50
Conditioned ft²	714.8		

Conditions at Time of Heating Peak

Outside	DB / WB / HR	32.0 °F	/	32.0 °F	/	0.0 gr/lb
Zone	DB / RH / HR	32.0 °F	/	0.0 %	/	0.0 gr/lb

	Instant Sensible (Btu/h)	Time Delay Sensible (Btu/h)	Latent (Btu/h)	Total (Btu/h)	Percent of Total (%)
Roof	0	0	0	0	0.0
Other Roof	0	0	0	0	0.0
Glass	0	0	0	0	0.0
Door	0	0	0	0	0.0
Wall	0	0	0	0	0.0
Below-Grade Wall	0	0	0	0	0.0
Other Wall	0	0	0	0	0.0
Partition	0	0	0	0	0.0
Exterior Floor	0	0	0	0	0.0
Interior Floor	0	0	0	0	0.0
Slab	0	0	0	0	0.0
Other Floor	0	0	0	0	0.0
Infiltration	0	0	0	0	0.0
Envelope Subtotal	0	0	0	0	-
People	0	0	0	0	0.0
Lights	0	0	0	0	0.0
RA Sensible (Lights)	0	0	0	0	0.0
Miscellaneous Loads	0	0	0	0	0.0
Internal Subtotal	0	0	0	0	-
RA (All Other)	0	0	0	0	0.0
DOA Direct to Zone	0	0	0	0	0.0
Ceiling	0	0	0	0	0.0
Refrigeration	0	0	0	0	0.0
Service Water	0	0	0	0	0.0
HVAC Equipment Losses	0	0	0	0	0.0
Adj Air Transfer Heat	0	0	0	0	0.0
Sizing Factor Correction	0	0	0	0	0.0
Time Delay Correction	0	0	0	0	0.0
Grand Total	0	0	0	0	100.0

Engineering Checks

Heating Mbh	0.00	Input Ventilation cfm	223
Heating cfm	742.97	Calculated Ventilation cfm	214
ft²/Mbh	0.00	Number of People	36.09
cfm/Mbh	0.00	People per 1000 ft²	50
Conditioned ft²	714.8		

ZONE_VAV-1-07

Conditions at Time of Cooling Peak

Outside	DB / WB / HR	75.4 °F	/	65.8 °F	/	80.2 gr/lb
Zone	DB / RH / HR	75.0 °F	/	63.9 %	/	82.8 gr/lb

	Instant Sensible (Btu/h)	Time Delay Sensible (Btu/h)	Latent (Btu/h)	Total (Btu/h)	Percent of Total (%)
Roof	0	0	0	0	0.0
Other Roof	0	0	0	0	0.0
Glass	0	0	0	0	0.0
Door	0	-21	0	-21	-0.1
Wall	0	0	0	0	0.0
Below-Grade Wall	0	0	0	0	0.0
Other Wall	0	0	0	0	0.0
Partition	0	-192	0	-192	-1.0
Exterior Floor	0	0	0	0	0.0
Interior Floor	0	0	0	0	0.0
Slab	0	-320	0	-320	-1.7
Other Floor	0	0	0	0	0.0
Infiltration	0	0	0	0	0.0
Envelope Subtotal	0	-533	0	-533	-
People	3779	4550	7198	15528	80.1
Lights	811	1185	0	1996	10.3
RA Sensible (Lights)	931	0	0	931	4.8
Miscellaneous Loads	923	578	0	1501	7.7
Internal Subtotal	6444	6314	7198	19956	-
RA (All Other)	0	0	0	0	0.0
DOA Direct to Zone	0	0	0	0	0.0
Ceiling	0	9	0	9	0.0
Refrigeration	0	0	0	0	0.0
Service Water	0	0	0	0	0.0
HVAC Equipment Losses	0	0	0	0	0.0
Adj Air Transfer Heat	0	0	0	0	0.0
Sizing Factor Correction	0	0	0	0	0.0
Time Delay Correction	0	-58	0	-58	-0.3
Grand Total	6444	5732	7198	19374	100.0

Engineering Checks

Cooling tons	1.61	Input Ventilation cfm	223
Cooling cfm	2,477.05	Calculated Ventilation cfm	531
ft²/ton	443.27	Number of People	35.94
cfm/ton	1,533.96	People per 1000 ft²	50
Conditioned ft²	715.6		

Conditions at Time of Heating Peak

Outside	DB / WB / HR	16.4 °F	/	12.6 °F	/	5.3 gr/lb
Zone	DB / RH / HR	70.0 °F	/	4.9 %	/	5.3 gr/lb

	Instant Sensible (Btu/h)	Time Delay Sensible (Btu/h)	Latent (Btu/h)	Total (Btu/h)	Percent of Total (%)
Roof	0	0	0	0	0.0
Other Roof	0	0	0	0	0.0
Glass	0	0	0	0	0.0
Door	0	-36	0	-36	147.1
Wall	0	0	0	0	0.0
Below-Grade Wall	0	0	0	0	0.0
Other Wall	0	0	0	0	0.0
Partition	0	171	0	171	-695.0
Exterior Floor	0	0	0	0	0.0
Interior Floor	0	0	0	0	0.0
Slab	0	34	0	34	-139.2
Other Floor	0	0	0	0	0.0
Infiltration	0	0	0	0	0.0
Envelope Subtotal	0	169	0	169	-
People	0	0	0	0	0.0
Lights	0	0	0	0	0.0
RA Sensible (Lights)	0	0	0	0	0.0
Miscellaneous Loads	0	0	0	0	0.0
Internal Subtotal	0	0	0	0	-
RA (All Other)	0	0	0	0	0.0
DOA Direct to Zone	0	0	0	0	0.0
Ceiling	0	-194	0	-194	787.2
Refrigeration	0	0	0	0	0.0
Service Water	0	0	0	0	0.0
HVAC Equipment Losses	0	0	0	0	0.0
Adj Air Transfer Heat	0	0	0	0	0.0
Sizing Factor Correction	0	0	0	0	0.0
Time Delay Correction	0	0	0	0	0.0
Grand Total	0	-25	0	-25	100.0

Engineering Checks

Heating Mbh	-0.02	Input Ventilation cfm	223
Heating cfm	743.11	Calculated Ventilation cfm	214
ft²/Mbh	-29074.49	Number of People	35.94
cfm/Mbh	-30,190.09	People per 1000 ft²	50
Conditioned ft²	715.6		

ZONE_VAV-1-08

Conditions at Time of Cooling Peak

Outside	DB / WB / HR	87.8 °F	/	73.1 °F	/	99.5 gr/lb
Zone	DB / RH / HR	75.0 °F	/	52.2 %	/	67.5 gr/lb

	Instant Sensible (Btu/h)	Time Delay Sensible (Btu/h)	Latent (Btu/h)	Total (Btu/h)	Percent of Total (%)
Roof	0	0	0	0	0.0
Other Roof	0	0	0	0	0.0
Glass	4905	7388	0	12294	47.0
Door	0	0	0	0	0.0
Wall	0	142	0	142	0.5
Below-Grade Wall	0	0	0	0	0.0
Other Wall	0	0	0	0	0.0
Partition	0	-254	0	-254	-1.0
Exterior Floor	0	0	0	0	0.0
Interior Floor	0	0	0	0	0.0
Slab	0	-2265	0	-2265	-8.7
Other Floor	0	0	0	0	0.0
Infiltration	0	0	0	0	0.0
Envelope Subtotal	4905	5012	0	9917	-
People	1386	2269	3299	6954	26.6
Lights	588	1059	0	1647	6.3
RA Sensible (Lights)	676	0	0	676	2.6
Miscellaneous Loads	6248	5611	0	11859	45.3
Internal Subtotal	8898	8939	3299	21136	-
RA (All Other)	0	0	0	0	0.0
DOA Direct to Zone	0	0	0	0	0.0
Ceiling	0	-2236	0	-2236	-8.5
Refrigeration	0	0	0	0	0.0
Service Water	0	0	0	0	0.0
HVAC Equipment Losses	0	0	0	0	0.0
Adj Air Transfer Heat	0	0	0	0	0.0
Sizing Factor Correction	0	0	0	0	0.0
Time Delay Correction	0	-2655	0	-2655	-10.1
Grand Total	13803	9059	3299	26162	100.0

Engineering Checks

Cooling tons	2.18	Input Ventilation cfm	99
Cooling cfm	1,101.19	Calculated Ventilation cfm	236
ft²/ton	298.98	Number of People	11.99
cfm/ton	505.01	People per 1000 ft²	18
Conditioned ft²	651.8		

Conditions at Time of Heating Peak

Outside	DB / WB / HR	16.4 °F	/	12.6 °F	/	5.3 gr/lb
Zone	DB / RH / HR	70.0 °F	/	4.9 %	/	5.2 gr/lb

	Instant Sensible (Btu/h)	Time Delay Sensible (Btu/h)	Latent (Btu/h)	Total (Btu/h)	Percent of Total (%)
Roof	0	0	0	0	0.0
Other Roof	0	0	0	0	0.0
Glass	-6891	0	0	-6891	87.6
Door	0	0	0	0	0.0
Wall	0	-618	0	-618	7.9
Below-Grade Wall	0	0	0	0	0.0
Other Wall	0	0	0	0	0.0
Partition	0	70	0	70	-0.9
Exterior Floor	0	0	0	0	0.0
Interior Floor	0	0	0	0	0.0
Slab	0	-4	0	-4	0.0
Other Floor	0	0	0	0	0.0
Infiltration	0	0	0	0	0.0
Envelope Subtotal	-6891	-551	0	-7442	-
People	0	0	0	0	0.0
Lights	0	0	0	0	0.0
RA Sensible (Lights)	0	0	0	0	0.0
Miscellaneous Loads	0	0	0	0	0.0
Internal Subtotal	0	0	0	0	-
RA (All Other)	0	0	0	0	0.0
DOA Direct to Zone	0	0	0	0	0.0
Ceiling	0	-425	0	-425	5.4
Refrigeration	0	0	0	0	0.0
Service Water	0	0	0	0	0.0
HVAC Equipment Losses	0	0	0	0	0.0
Adj Air Transfer Heat	0	0	0	0	0.0
Sizing Factor Correction	0	0	0	0	0.0
Time Delay Correction	0	0	0	0	0.0
Grand Total	-6891	-976	0	-7867	100.0

Engineering Checks

Heating Mbh	-7.87	Input Ventilation cfm	99
Heating cfm	330.36	Calculated Ventilation cfm	95
ft²/Mbh	-82.86	Number of People	11.99
cfm/Mbh	-41.99	People per 1000 ft²	18
Conditioned ft²	651.8		

ZONE_VAV-1-09

Conditions at Time of Cooling Peak

Outside	DB / WB / HR	83.2 °F	/	71.0 °F	/	95.0 gr/lb
Zone	DB / RH / HR	75.0 °F	/	50.0 %	/	64.6 gr/lb

	Instant Sensible (Btu/h)	Time Delay Sensible (Btu/h)	Latent (Btu/h)	Total (Btu/h)	Percent of Total (%)
Roof	0	0	0	0	0.0
Other Roof	0	0	0	0	0.0
Glass	4113	3721	0	7834	89.1
Door	0	0	0	0	0.0
Wall	0	18	0	18	0.2
Below-Grade Wall	0	0	0	0	0.0
Other Wall	0	0	0	0	0.0
Partition	0	-473	0	-473	-5.4
Exterior Floor	0	0	0	0	0.0
Interior Floor	0	0	0	0	0.0
Slab	0	-1330	0	-1330	-15.1
Other Floor	0	0	0	0	0.0
Infiltration	0	0	0	0	0.0
Envelope Subtotal	4113	1935	0	6048	-
People	228	493	434	1154	13.1
Lights	523	1122	0	1645	18.7
RA Sensible (Lights)	600	0	0	600	6.8
Miscellaneous Loads	888	982	0	1870	21.3
Internal Subtotal	2239	2597	434	5270	-
RA (All Other)	0	0	0	0	0.0
DOA Direct to Zone	0	0	0	0	0.0
Ceiling	0	-1813	0	-1813	-20.6
Refrigeration	0	0	0	0	0.0
Service Water	0	0	0	0	0.0
HVAC Equipment Losses	0	0	0	0	0.0
Adj Air Transfer Heat	0	0	0	0	0.0
Sizing Factor Correction	0	0	0	0	0.0
Time Delay Correction	0	-709	0	-709	-8.1
Grand Total	6352	2010	434	8796	100.0

Engineering Checks

Cooling tons	0.73	Input Ventilation cfm	50
Cooling cfm	553.37	Calculated Ventilation cfm	119
ft²/ton	885.83	Number of People	2.17
cfm/ton	754.75	People per 1000 ft²	3
Conditioned ft²	649.3		

Conditions at Time of Heating Peak

Outside	DB / WB / HR	16.4 °F	/	12.6 °F	/	5.3 gr/lb
Zone	DB / RH / HR	70.0 °F	/	4.9 %	/	5.2 gr/lb

	Instant Sensible (Btu/h)	Time Delay Sensible (Btu/h)	Latent (Btu/h)	Total (Btu/h)	Percent of Total (%)
Roof	0	0	0	0	0.0
Other Roof	0	0	0	0	0.0
Glass	-4098	0	0	-4098	95.1
Door	0	0	0	0	0.0
Wall	0	-203	0	-203	4.7
Below-Grade Wall	0	0	0	0	0.0
Other Wall	0	0	0	0	0.0
Partition	0	316	0	316	-7.3
Exterior Floor	0	0	0	0	0.0
Interior Floor	0	0	0	0	0.0
Slab	0	-5	0	-5	0.1
Other Floor	0	0	0	0	0.0
Infiltration	0	0	0	0	0.0
Envelope Subtotal	-4098	109	0	-3989	-
People	0	0	0	0	0.0
Lights	0	0	0	0	0.0
RA Sensible (Lights)	0	0	0	0	0.0
Miscellaneous Loads	0	0	0	0	0.0
Internal Subtotal	0	0	0	0	-
RA (All Other)	0	0	0	0	0.0
DOA Direct to Zone	0	0	0	0	0.0
Ceiling	0	-321	0	-321	7.4
Refrigeration	0	0	0	0	0.0
Service Water	0	0	0	0	0.0
HVAC Equipment Losses	0	0	0	0	0.0
Adj Air Transfer Heat	0	0	0	0	0.0
Sizing Factor Correction	0	0	0	0	0.0
Time Delay Correction	0	0	0	0	0.0
Grand Total	-4098	-212	0	-4310	100.0

Engineering Checks

Heating Mbh	-4.31	Input Ventilation cfm	50
Heating cfm	166.01	Calculated Ventilation cfm	48
ft²/Mbh	-150.66	Number of People	2.17
cfm/Mbh	-38.52	People per 1000 ft²	3
Conditioned ft²	649.3		

ZONE_VAV-1-10

Conditions at Time of Cooling Peak

Outside	DB / WB / HR	83.3 °F	/	68.3 °F	/	80.3 gr/lb
Zone	DB / RH / HR	75.0 °F	/	51.0 %	/	66.0 gr/lb

	Instant Sensible (Btu/h)	Time Delay Sensible (Btu/h)	Latent (Btu/h)	Total (Btu/h)	Percent of Total (%)
Roof	0	0	0	0	0.0
Other Roof	0	0	0	0	0.0
Glass	7198	7977	0	15175	56.8
Door	0	0	0	0	0.0
Wall	0	785	0	785	2.9
Below-Grade Wall	0	0	0	0	0.0
Other Wall	0	0	0	0	0.0
Partition	0	-125	0	-125	-0.5
Exterior Floor	0	0	0	0	0.0
Interior Floor	0	0	0	0	0.0
Slab	0	-2530	0	-2530	-9.5
Other Floor	0	0	0	0	0.0
Infiltration	0	0	0	0	0.0
Envelope Subtotal	7198	6107	0	13305	-
People	1003	1119	2350	4472	16.7
Lights	790	955	0	1745	6.5
RA Sensible (Lights)	907	0	0	907	3.4
Miscellaneous Loads	5067	3118	0	8186	30.7
Internal Subtotal	7768	5193	2350	15310	-
RA (All Other)	0	0	0	0	0.0
DOA Direct to Zone	0	0	0	0	0.0
Ceiling	0	-374	0	-374	-1.4
Refrigeration	0	0	0	0	0.0
Service Water	0	0	0	0	0.0
HVAC Equipment Losses	0	0	0	0	0.0
Adj Air Transfer Heat	0	0	0	0	0.0
Sizing Factor Correction	0	0	0	0	0.0
Time Delay Correction	0	-1542	0	-1542	-5.8
Grand Total	14965	9384	2350	26700	100.0

Engineering Checks

Cooling tons	2.22	Input Ventilation cfm	96
Cooling cfm	1,072.95	Calculated Ventilation cfm	164
ft²/ton	393.40	Number of People	8.75
cfm/ton	482.14	People per 1000 ft²	10
Conditioned ft²	875.2		

Conditions at Time of Heating Peak

Outside	DB / WB / HR	16.4 °F	/	12.6 °F	/	5.3 gr/lb
Zone	DB / RH / HR	70.0 °F	/	4.9 %	/	5.2 gr/lb

	Instant Sensible (Btu/h)	Time Delay Sensible (Btu/h)	Latent (Btu/h)	Total (Btu/h)	Percent of Total (%)
Roof	0	0	0	0	0.0
Other Roof	0	0	0	0	0.0
Glass	-7270	0	0	-7270	84.7
Door	0	0	0	0	0.0
Wall	0	-737	0	-737	8.6
Below-Grade Wall	0	0	0	0	0.0
Other Wall	0	0	0	0	0.0
Partition	0	104	0	104	-1.2
Exterior Floor	0	0	0	0	0.0
Interior Floor	0	0	0	0	0.0
Slab	0	-6	0	-6	0.1
Other Floor	0	0	0	0	0.0
Infiltration	0	0	0	0	0.0
Envelope Subtotal	-7270	-639	0	-7909	-
People	0	0	0	0	0.0
Lights	0	0	0	0	0.0
RA Sensible (Lights)	0	0	0	0	0.0
Miscellaneous Loads	0	0	0	0	0.0
Internal Subtotal	0	0	0	0	-
RA (All Other)	0	0	0	0	0.0
DOA Direct to Zone	0	0	0	0	0.0
Ceiling	0	-678	0	-678	7.9
Refrigeration	0	0	0	0	0.0
Service Water	0	0	0	0	0.0
HVAC Equipment Losses	0	0	0	0	0.0
Adj Air Transfer Heat	0	0	0	0	0.0
Sizing Factor Correction	0	0	0	0	0.0
Time Delay Correction	0	0	0	0	0.0
Grand Total	-7270	-1317	0	-8587	100.0

Engineering Checks

Heating Mbh	-8.59	Input Ventilation cfm	96
Heating cfm	321.89	Calculated Ventilation cfm	91
ft²/Mbh	-101.93	Number of People	8.75
cfm/Mbh	-37.48	People per 1000 ft²	10
Conditioned ft²	875.2		

ZONE_VAV-1-11

Conditions at Time of Cooling Peak

Outside	DB / WB / HR	74.8 °F	/	62.5 °F	/	65.2 gr/lb
Zone	DB / RH / HR	75.0 °F	/	50.9 %	/	65.8 gr/lb

	Instant Sensible (Btu/h)	Time Delay Sensible (Btu/h)	Latent (Btu/h)	Total (Btu/h)	Percent of Total (%)
Roof	0	0	0	0	0.0
Other Roof	0	0	0	0	0.0
Glass	4742	5260	0	10002	43.8
Door	0	-14	0	-14	-0.1
Wall	0	340	0	340	1.5
Below-Grade Wall	0	0	0	0	0.0
Other Wall	0	0	0	0	0.0
Partition	0	-166	0	-166	-0.7
Exterior Floor	0	0	0	0	0.0
Interior Floor	0	0	0	0	0.0
Slab	0	-1722	0	-1722	-7.5
Other Floor	0	0	0	0	0.0
Infiltration	0	0	0	0	0.0
Envelope Subtotal	4742	3699	0	8441	-
People	928	986	1767	3681	16.1
Lights	880	1029	0	1909	8.4
RA Sensible (Lights)	1011	0	0	1011	4.4
Miscellaneous Loads	5271	3214	0	8486	37.2
Internal Subtotal	8090	5229	1767	15086	-
RA (All Other)	0	0	0	0	0.0
DOA Direct to Zone	0	0	0	0	0.0
Ceiling	0	-165	0	-165	-0.7
Refrigeration	0	0	0	0	0.0
Service Water	0	0	0	0	0.0
HVAC Equipment Losses	0	0	0	0	0.0
Adj Air Transfer Heat	0	0	0	0	0.0
Sizing Factor Correction	1151	0	0	1151	5.0
Time Delay Correction	0	-1690	0	-1690	-7.4
Grand Total	13983	7072	1767	22822	100.0

Engineering Checks

Cooling tons	1.90	Input Ventilation cfm	103
Cooling cfm	1,140.93	Calculated Ventilation cfm	174
ft²/ton	512.59	Number of People	8.84
cfm/ton	599.79	People per 1000 ft²	9
Conditioned ft²	974.8		

Conditions at Time of Heating Peak

Outside	DB / WB / HR	16.4 °F	/	12.6 °F	/	5.3 gr/lb
Zone	DB / RH / HR	70.0 °F	/	4.9 %	/	5.2 gr/lb

	Instant Sensible (Btu/h)	Time Delay Sensible (Btu/h)	Latent (Btu/h)	Total (Btu/h)	Percent of Total (%)
Roof	0	0	0	0	0.0
Other Roof	0	0	0	0	0.0
Glass	-3648	0	0	-3648	84.3
Door	0	15	0	15	-0.3
Wall	0	-314	0	-314	7.2
Below-Grade Wall	0	0	0	0	0.0
Other Wall	0	0	0	0	0.0
Partition	0	165	0	165	-3.8
Exterior Floor	0	0	0	0	0.0
Interior Floor	0	0	0	0	0.0
Slab	0	-5	0	-5	0.1
Other Floor	0	0	0	0	0.0
Infiltration	0	0	0	0	0.0
Envelope Subtotal	-3648	-139	0	-3787	-
People	0	0	0	0	0.0
Lights	0	0	0	0	0.0
RA Sensible (Lights)	0	0	0	0	0.0
Miscellaneous Loads	0	0	0	0	0.0
Internal Subtotal	0	0	0	0	-
RA (All Other)	0	0	0	0	0.0
DOA Direct to Zone	0	0	0	0	0.0
Ceiling	0	-539	0	-539	12.5
Refrigeration	0	0	0	0	0.0
Service Water	0	0	0	0	0.0
HVAC Equipment Losses	0	0	0	0	0.0
Adj Air Transfer Heat	0	0	0	0	0.0
Sizing Factor Correction	0	0	0	0	0.0
Time Delay Correction	0	0	0	0	0.0
Grand Total	-3648	-677	0	-4325	100.0

Engineering Checks

Heating Mbh	-4.33	Input Ventilation cfm	103
Heating cfm	342.28	Calculated Ventilation cfm	97
ft²/Mbh	-225.40	Number of People	8.84
cfm/Mbh	-79.14	People per 1000 ft²	9
Conditioned ft²	974.8		

ZONE_VAV-1-12

Conditions at Time of Cooling Peak

Outside	DB / WB / HR	74.0 °F	/	62.2 °F	/	65.2 gr/lb
Zone	DB / RH / HR	75.0 °F	/	51.4 %	/	66.5 gr/lb

	Instant Sensible (Btu/h)	Time Delay Sensible (Btu/h)	Latent (Btu/h)	Total (Btu/h)	Percent of Total (%)
Roof	0	0	0	0	0.0
Other Roof	0	0	0	0	0.0
Glass	4500	4957	0	9457	42.8
Door	0	63	0	63	0.3
Wall	0	302	0	302	1.4
Below-Grade Wall	0	0	0	0	0.0
Other Wall	0	0	0	0	0.0
Partition	0	-319	0	-319	-1.4
Exterior Floor	0	0	0	0	0.0
Interior Floor	0	0	0	0	0.0
Slab	0	-1361	0	-1361	-6.2
Other Floor	0	0	0	0	0.0
Infiltration	0	0	0	0	0.0
Envelope Subtotal	4500	3642	0	8142	-
People	924	987	2199	4110	18.6
Lights	924	1177	0	2101	9.5
RA Sensible (Lights)	1061	0	0	1061	4.8
Miscellaneous Loads	4806	2958	0	7764	35.1
Internal Subtotal	7714	5122	2199	15036	-
RA (All Other)	0	0	0	0	0.0
DOA Direct to Zone	0	0	0	0	0.0
Ceiling	0	-69	0	-69	-0.3
Refrigeration	0	0	0	0	0.0
Service Water	0	0	0	0	0.0
HVAC Equipment Losses	0	0	0	0	0.0
Adj Air Transfer Heat	0	0	0	0	0.0
Sizing Factor Correction	0	0	0	0	0.0
Time Delay Correction	0	-995	0	-995	-4.5
Grand Total	12215	7700	2199	22114	100.0

Engineering Checks

Cooling tons	1.84	Input Ventilation cfm	109
Cooling cfm	1,215.66	Calculated Ventilation cfm	186
ft²/ton	627.79	Number of People	8.00
cfm/ton	659.54	People per 1000 ft²	7
Conditioned ft²	1156.8		

Conditions at Time of Heating Peak

Outside	DB / WB / HR	16.4 °F	/	12.6 °F	/	5.3 gr/lb
Zone	DB / RH / HR	70.0 °F	/	4.9 %	/	5.2 gr/lb

	Instant Sensible (Btu/h)	Time Delay Sensible (Btu/h)	Latent (Btu/h)	Total (Btu/h)	Percent of Total (%)
Roof	0	0	0	0	0.0
Other Roof	0	0	0	0	0.0
Glass	-3443	0	0	-3443	87.1
Door	0	2	0	2	0.0
Wall	0	-260	0	-260	6.6
Below-Grade Wall	0	0	0	0	0.0
Other Wall	0	0	0	0	0.0
Partition	0	646	0	646	-16.3
Exterior Floor	0	0	0	0	0.0
Interior Floor	0	0	0	0	0.0
Slab	0	-3	0	-3	0.1
Other Floor	0	0	0	0	0.0
Infiltration	0	0	0	0	0.0
Envelope Subtotal	-3443	384	0	-3059	-
People	0	0	0	0	0.0
Lights	0	0	0	0	0.0
RA Sensible (Lights)	0	0	0	0	0.0
Miscellaneous Loads	0	0	0	0	0.0
Internal Subtotal	0	0	0	0	-
RA (All Other)	0	0	0	0	0.0
DOA Direct to Zone	0	0	0	0	0.0
Ceiling	0	-503	0	-503	12.7
Refrigeration	0	0	0	0	0.0
Service Water	0	0	0	0	0.0
HVAC Equipment Losses	0	0	0	0	0.0
Adj Air Transfer Heat	0	0	0	0	0.0
Sizing Factor Correction	-391	0	0	-391	9.9
Time Delay Correction	0	0	0	0	0.0
Grand Total	-3834	-119	0	-3953	100.0

Engineering Checks

Heating Mbh	-3.95	Input Ventilation cfm	109
Heating cfm	364.70	Calculated Ventilation cfm	104
ft²/Mbh	-292.63	Number of People	8.00
cfm/Mbh	-92.25	People per 1000 ft²	7
Conditioned ft²	1156.8		

ZONE_VAV-1-13

Conditions at Time of Cooling Peak

Outside	DB / WB / HR	74.8 °F	/	62.5 °F	/	65.2 gr/lb
Zone	DB / RH / HR	75.0 °F	/	51.7 %	/	66.9 gr/lb

	Instant Sensible (Btu/h)	Time Delay Sensible (Btu/h)	Latent (Btu/h)	Total (Btu/h)	Percent of Total (%)
Roof	0	0	0	0	0.0
Other Roof	0	0	0	0	0.0
Glass	0	0	0	0	0.0
Door	0	20	0	20	0.9
Wall	0	0	0	0	0.0
Below-Grade Wall	0	0	0	0	0.0
Other Wall	0	0	0	0	0.0
Partition	0	694	0	694	31.8
Exterior Floor	0	0	0	0	0.0
Interior Floor	0	0	0	0	0.0
Slab	0	-83	0	-83	-3.8
Other Floor	0	0	0	0	0.0
Infiltration	0	0	0	0	0.0
Envelope Subtotal	0	631	0	631	-
People	104	122	198	424	19.4
Lights	0	72	0	72	3.3
RA Sensible (Lights)	305	0	0	305	14.0
Miscellaneous Loads	295	176	0	471	21.6
Internal Subtotal	704	370	198	1271	-
RA (All Other)	0	0	0	0	0.0
DOA Direct to Zone	0	0	0	0	0.0
Ceiling	0	137	0	137	6.3
Refrigeration	0	0	0	0	0.0
Service Water	0	0	0	0	0.0
HVAC Equipment Losses	0	0	0	0	0.0
Adj Air Transfer Heat	0	0	0	0	0.0
Sizing Factor Correction	146	0	0	146	6.7
Time Delay Correction	0	-2	0	-2	-0.1
Grand Total	850	1136	198	2183	100.0

Engineering Checks

Cooling tons	0.18	Input Ventilation cfm	17
Cooling cfm	186.64	Calculated Ventilation cfm	28
ft²/ton	1086.25	Number of People	0.99
cfm/ton	1,025.58	People per 1000 ft²	5
Conditioned ft²	197.6		

Conditions at Time of Heating Peak

Outside	DB / WB / HR	16.4 °F	/	12.6 °F	/	5.3 gr/lb
Zone	DB / RH / HR	70.0 °F	/	4.9 %	/	5.2 gr/lb

	Instant Sensible (Btu/h)	Time Delay Sensible (Btu/h)	Latent (Btu/h)	Total (Btu/h)	Percent of Total (%)
Roof	0	0	0	0	0.0
Other Roof	0	0	0	0	0.0
Glass	0	0	0	0	0.0
Door	0	-8	0	-8	6.0
Wall	0	0	0	0	0.0
Below-Grade Wall	0	0	0	0	0.0
Other Wall	0	0	0	0	0.0
Partition	0	18	0	18	-13.9
Exterior Floor	0	0	0	0	0.0
Interior Floor	0	0	0	0	0.0
Slab	0	-1	0	-1	0.5
Other Floor	0	0	0	0	0.0
Infiltration	0	0	0	0	0.0
Envelope Subtotal	0	10	0	10	-
People	0	0	0	0	0.0
Lights	0	0	0	0	0.0
RA Sensible (Lights)	0	0	0	0	0.0
Miscellaneous Loads	0	0	0	0	0.0
Internal Subtotal	0	0	0	0	-
RA (All Other)	0	0	0	0	0.0
DOA Direct to Zone	0	0	0	0	0.0
Ceiling	0	-138	0	-138	107.4
Refrigeration	0	0	0	0	0.0
Service Water	0	0	0	0	0.0
HVAC Equipment Losses	0	0	0	0	0.0
Adj Air Transfer Heat	0	0	0	0	0.0
Sizing Factor Correction	0	0	0	0	0.0
Time Delay Correction	0	0	0	0	0.0
Grand Total	0	-128	0	-128	100.0

Engineering Checks

Heating Mbh	-0.13	Input Ventilation cfm	17
Heating cfm	55.99	Calculated Ventilation cfm	16
ft²/Mbh	-1538.50	Number of People	0.99
cfm/Mbh	-435.85	People per 1000 ft²	5
Conditioned ft²	197.6		

ZONE_VAV-1-14

Conditions at Time of Cooling Peak

Outside	DB / WB / HR	74.8 °F	/	62.5 °F	/	65.2 gr/lb
Zone	DB / RH / HR	75.0 °F	/	56.7 %	/	73.4 gr/lb

	Instant Sensible (Btu/h)	Time Delay Sensible (Btu/h)	Latent (Btu/h)	Total (Btu/h)	Percent of Total (%)
Roof	0	0	0	0	0.0
Other Roof	0	0	0	0	0.0
Glass	0	0	0	0	0.0
Door	0	31	0	31	0.7
Wall	0	0	0	0	0.0
Below-Grade Wall	0	0	0	0	0.0
Other Wall	0	0	0	0	0.0
Partition	0	721	0	721	17.2
Exterior Floor	0	0	0	0	0.0
Interior Floor	0	0	0	0	0.0
Slab	0	-136	0	-136	-3.2
Other Floor	0	0	0	0	0.0
Infiltration	0	0	0	0	0.0
Envelope Subtotal	0	616	0	616	-
People	525	667	1000	2192	52.2
Lights	195	332	0	526	12.5
RA Sensible (Lights)	223	0	0	223	5.3
Miscellaneous Loads	312	228	0	541	12.9
Internal Subtotal	1255	1227	1000	3482	-
RA (All Other)	0	0	0	0	0.0
DOA Direct to Zone	0	0	0	0	0.0
Ceiling	0	105	0	105	2.5
Refrigeration	0	0	0	0	0.0
Service Water	0	0	0	0	0.0
HVAC Equipment Losses	0	0	0	0	0.0
Adj Air Transfer Heat	0	0	0	0	0.0
Sizing Factor Correction	0	0	0	0	0.0
Time Delay Correction	0	-8	0	-8	-0.2
Grand Total	1255	1940	1000	4195	100.0

Engineering Checks

Cooling tons	0.35	Input Ventilation cfm	46
Cooling cfm	510.52	Calculated Ventilation cfm	78
ft²/ton	692.52	Number of People	5.00
cfm/ton	1,460.04	People per 1000 ft²	21
Conditioned ft²	242.1		

Conditions at Time of Heating Peak

Outside	DB / WB / HR	16.4 °F	/	12.6 °F	/	5.3 gr/lb
Zone	DB / RH / HR	70.0 °F	/	4.9 %	/	5.2 gr/lb

	Instant Sensible (Btu/h)	Time Delay Sensible (Btu/h)	Latent (Btu/h)	Total (Btu/h)	Percent of Total (%)
Roof	0	0	0	0	0.0
Other Roof	0	0	0	0	0.0
Glass	0	0	0	0	0.0
Door	0	-12	0	-12	2.6
Wall	0	0	0	0	0.0
Below-Grade Wall	0	0	0	0	0.0
Other Wall	0	0	0	0	0.0
Partition	0	-273	0	-273	59.8
Exterior Floor	0	0	0	0	0.0
Interior Floor	0	0	0	0	0.0
Slab	0	-2	0	-2	0.5
Other Floor	0	0	0	0	0.0
Infiltration	0	0	0	0	0.0
Envelope Subtotal	0	-287	0	-287	-
People	0	0	0	0	0.0
Lights	0	0	0	0	0.0
RA Sensible (Lights)	0	0	0	0	0.0
Miscellaneous Loads	0	0	0	0	0.0
Internal Subtotal	0	0	0	0	-
RA (All Other)	0	0	0	0	0.0
DOA Direct to Zone	0	0	0	0	0.0
Ceiling	0	-170	0	-170	37.2
Refrigeration	0	0	0	0	0.0
Service Water	0	0	0	0	0.0
HVAC Equipment Losses	0	0	0	0	0.0
Adj Air Transfer Heat	0	0	0	0	0.0
Sizing Factor Correction	0	0	0	0	0.0
Time Delay Correction	0	0	0	0	0.0
Grand Total	0	-456	0	-456	100.0

Engineering Checks

Heating Mbh	-0.46	Input Ventilation cfm	46
Heating cfm	153.16	Calculated Ventilation cfm	43
ft²/Mbh	-530.71	Number of People	5.00
cfm/Mbh	-335.73	People per 1000 ft²	21
Conditioned ft²	242.1		

ZONE_VAV-1-15

Conditions at Time of Cooling Peak

Outside	DB / WB / HR	74.0 °F	/	62.2 °F	/	65.2 gr/lb
Zone	DB / RH / HR	75.0 °F	/	51.7 %	/	66.9 gr/lb

	Instant Sensible (Btu/h)	Time Delay Sensible (Btu/h)	Latent (Btu/h)	Total (Btu/h)	Percent of Total (%)
Roof	0	0	0	0	0.0
Other Roof	0	0	0	0	0.0
Glass	4017	4993	0	9010	38.0
Door	0	-34	0	-34	-0.1
Wall	0	281	0	281	1.2
Below-Grade Wall	0	0	0	0	0.0
Other Wall	0	0	0	0	0.0
Partition	0	-499	0	-499	-2.1
Exterior Floor	0	0	0	0	0.0
Interior Floor	0	0	0	0	0.0
Slab	0	-1336	0	-1336	-5.6
Other Floor	0	0	0	0	0.0
Infiltration	0	0	0	0	0.0
Envelope Subtotal	4017	3405	0	7422	-
People	1056	1104	2451	4611	19.4
Lights	920	1129	0	2049	8.6
RA Sensible (Lights)	1056	0	0	1056	4.5
Miscellaneous Loads	5362	3234	0	8596	36.2
Internal Subtotal	8393	5467	2451	16312	-
RA (All Other)	0	0	0	0	0.0
DOA Direct to Zone	0	0	0	0	0.0
Ceiling	0	-140	0	-140	-0.6
Refrigeration	0	0	0	0	0.0
Service Water	0	0	0	0	0.0
HVAC Equipment Losses	0	0	0	0	0.0
Adj Air Transfer Heat	0	0	0	0	0.0
Sizing Factor Correction	1344	0	0	1344	5.7
Time Delay Correction	0	-1219	0	-1219	-5.1
Grand Total	13755	7514	2451	23720	100.0

Engineering Checks

Cooling tons	1.98	Input Ventilation cfm	107
Cooling cfm	1,193.60	Calculated Ventilation cfm	182
ft²/ton	515.47	Number of People	9.26
cfm/ton	603.74	People per 1000 ft²	9
Conditioned ft²	1018.8		

Conditions at Time of Heating Peak

Outside	DB / WB / HR	16.4 °F	/	12.6 °F	/	5.3 gr/lb
Zone	DB / RH / HR	70.0 °F	/	4.9 %	/	5.2 gr/lb

	Instant Sensible (Btu/h)	Time Delay Sensible (Btu/h)	Latent (Btu/h)	Total (Btu/h)	Percent of Total (%)
Roof	0	0	0	0	0.0
Other Roof	0	0	0	0	0.0
Glass	-3216	0	0	-3216	76.8
Door	0	16	0	16	-0.4
Wall	0	-277	0	-277	6.6
Below-Grade Wall	0	0	0	0	0.0
Other Wall	0	0	0	0	0.0
Partition	0	200	0	200	-4.8
Exterior Floor	0	0	0	0	0.0
Interior Floor	0	0	0	0	0.0
Slab	0	-6	0	-6	0.1
Other Floor	0	0	0	0	0.0
Infiltration	0	0	0	0	0.0
Envelope Subtotal	-3216	-67	0	-3283	-
People	0	0	0	0	0.0
Lights	0	0	0	0	0.0
RA Sensible (Lights)	0	0	0	0	0.0
Miscellaneous Loads	0	0	0	0	0.0
Internal Subtotal	0	0	0	0	-
RA (All Other)	0	0	0	0	0.0
DOA Direct to Zone	0	0	0	0	0.0
Ceiling	0	-459	0	-459	11.0
Refrigeration	0	0	0	0	0.0
Service Water	0	0	0	0	0.0
HVAC Equipment Losses	0	0	0	0	0.0
Adj Air Transfer Heat	0	0	0	0	0.0
Sizing Factor Correction	-443	0	0	-443	10.6
Time Delay Correction	0	0	0	0	0.0
Grand Total	-3659	-526	0	-4185	100.0

Engineering Checks

Heating Mbh	-4.19	Input Ventilation cfm	107
Heating cfm	358.08	Calculated Ventilation cfm	102
ft²/Mbh	-243.45	Number of People	9.26
cfm/Mbh	-85.56	People per 1000 ft²	9
Conditioned ft²	1018.8		

ZONE_VAV-1-16

Conditions at Time of Cooling Peak

Outside	DB / WB / HR	87.8 °F	/	73.1 °F	/	99.5 gr/lb
Zone	DB / RH / HR	75.0 °F	/	50.5 %	/	65.3 gr/lb

	Instant Sensible (Btu/h)	Time Delay Sensible (Btu/h)	Latent (Btu/h)	Total (Btu/h)	Percent of Total (%)
Roof	0	0	0	0	0.0
Other Roof	0	0	0	0	0.0
Glass	741	1155	0	1896	49.9
Door	0	-27	0	-27	-0.7
Wall	0	161	0	161	4.2
Below-Grade Wall	0	0	0	0	0.0
Other Wall	0	0	0	0	0.0
Partition	0	184	0	184	4.8
Exterior Floor	0	0	0	0	0.0
Interior Floor	0	0	0	0	0.0
Slab	0	-237	0	-237	-6.2
Other Floor	0	0	0	0	0.0
Infiltration	0	0	0	0	0.0
Envelope Subtotal	741	1236	0	1977	-
People	142	213	270	624	16.4
Lights	63	114	0	177	4.7
RA Sensible (Lights)	72	0	0	72	1.9
Miscellaneous Loads	552	433	0	985	25.9
Internal Subtotal	829	760	270	1858	-
RA (All Other)	0	0	0	0	0.0
DOA Direct to Zone	0	0	0	0	0.0
Ceiling	0	-11	0	-11	-0.3
Refrigeration	0	0	0	0	0.0
Service Water	0	0	0	0	0.0
HVAC Equipment Losses	0	0	0	0	0.0
Adj Air Transfer Heat	0	0	0	0	0.0
Sizing Factor Correction	0	0	0	0	0.0
Time Delay Correction	0	-28	0	-28	-0.7
Grand Total	1570	1957	270	3797	100.0

Engineering Checks

Cooling tons	0.32	Input Ventilation cfm	11
Cooling cfm	158.14	Calculated Ventilation cfm	34
ft²/ton	220.45	Number of People	1.35
cfm/ton	499.66	People per 1000 ft²	19
Conditioned ft²	69.8		

Conditions at Time of Heating Peak

Outside	DB / WB / HR	16.4 °F	/	12.6 °F	/	5.3 gr/lb
Zone	DB / RH / HR	70.0 °F	/	4.9 %	/	5.2 gr/lb

	Instant Sensible (Btu/h)	Time Delay Sensible (Btu/h)	Latent (Btu/h)	Total (Btu/h)	Percent of Total (%)
Roof	0	0	0	0	0.0
Other Roof	0	0	0	0	0.0
Glass	-721	0	0	-721	71.8
Door	0	16	0	16	-1.6
Wall	0	-124	0	-124	12.4
Below-Grade Wall	0	0	0	0	0.0
Other Wall	0	0	0	0	0.0
Partition	0	-93	0	-93	9.2
Exterior Floor	0	0	0	0	0.0
Interior Floor	0	0	0	0	0.0
Slab	0	-1	0	-1	0.1
Other Floor	0	0	0	0	0.0
Infiltration	0	0	0	0	0.0
Envelope Subtotal	-721	-202	0	-923	-
People	0	0	0	0	0.0
Lights	0	0	0	0	0.0
RA Sensible (Lights)	0	0	0	0	0.0
Miscellaneous Loads	0	0	0	0	0.0
Internal Subtotal	0	0	0	0	-
RA (All Other)	0	0	0	0	0.0
DOA Direct to Zone	0	0	0	0	0.0
Ceiling	0	-82	0	-82	8.1
Refrigeration	0	0	0	0	0.0
Service Water	0	0	0	0	0.0
HVAC Equipment Losses	0	0	0	0	0.0
Adj Air Transfer Heat	0	0	0	0	0.0
Sizing Factor Correction	0	0	0	0	0.0
Time Delay Correction	0	0	0	0	0.0
Grand Total	-721	-284	0	-1005	100.0

Engineering Checks

Heating Mbh	-1.00	Input Ventilation cfm	11
Heating cfm	47.44	Calculated Ventilation cfm	14
ft²/Mbh	-69.42	Number of People	1.35
cfm/Mbh	-47.21	People per 1000 ft²	19
Conditioned ft²	69.8		

ZONE_VAV-1-17

Conditions at Time of Cooling Peak

Outside	DB / WB / HR	87.8 °F	/	73.1 °F	/	99.5 gr/lb
Zone	DB / RH / HR	75.0 °F	/	50.5 %	/	65.3 gr/lb

	Instant Sensible (Btu/h)	Time Delay Sensible (Btu/h)	Latent (Btu/h)	Total (Btu/h)	Percent of Total (%)
Roof	0	0	0	0	0.0
Other Roof	0	0	0	0	0.0
Glass	754	1044	0	1798	36.7
Door	0	-9	0	-9	-0.2
Wall	0	465	0	465	9.5
Below-Grade Wall	0	0	0	0	0.0
Other Wall	0	0	0	0	0.0
Partition	0	441	0	441	9.0
Exterior Floor	0	0	0	0	0.0
Interior Floor	0	0	0	0	0.0
Slab	0	-384	0	-384	-7.8
Other Floor	0	0	0	0	0.0
Infiltration	0	0	0	0	0.0
Envelope Subtotal	754	1556	0	2309	-
People	181	246	346	773	15.8
Lights	149	252	0	401	8.2
RA Sensible (Lights)	171	0	0	171	3.5
Miscellaneous Loads	708	516	0	1224	25.0
Internal Subtotal	1210	1014	346	2569	-
RA (All Other)	0	0	0	0	0.0
DOA Direct to Zone	0	0	0	0	0.0
Ceiling	0	45	0	45	0.9
Refrigeration	0	0	0	0	0.0
Service Water	0	0	0	0	0.0
HVAC Equipment Losses	0	0	0	0	0.0
Adj Air Transfer Heat	0	0	0	0	0.0
Sizing Factor Correction	0	0	0	0	0.0
Time Delay Correction	0	-24	0	-24	-0.5
Grand Total	1963	2591	346	4900	100.0

Engineering Checks

Cooling tons	0.41	Input Ventilation cfm	17
Cooling cfm	200.57	Calculated Ventilation cfm	43
ft²/ton	356.99	Number of People	1.73
cfm/ton	491.14	People per 1000 ft²	12
Conditioned ft²	145.7		

Conditions at Time of Heating Peak

Outside	DB / WB / HR	16.4 °F	/	12.6 °F	/	5.3 gr/lb
Zone	DB / RH / HR	70.0 °F	/	4.9 %	/	5.2 gr/lb

	Instant Sensible (Btu/h)	Time Delay Sensible (Btu/h)	Latent (Btu/h)	Total (Btu/h)	Percent of Total (%)
Roof	0	0	0	0	0.0
Other Roof	0	0	0	0	0.0
Glass	-726	0	0	-726	54.2
Door	0	14	0	14	-1.0
Wall	0	-346	0	-346	25.8
Below-Grade Wall	0	0	0	0	0.0
Other Wall	0	0	0	0	0.0
Partition	0	-108	0	-108	8.1
Exterior Floor	0	0	0	0	0.0
Interior Floor	0	0	0	0	0.0
Slab	0	-1	0	-1	0.1
Other Floor	0	0	0	0	0.0
Infiltration	0	0	0	0	0.0
Envelope Subtotal	-726	-442	0	-1168	-
People	0	0	0	0	0.0
Lights	0	0	0	0	0.0
RA Sensible (Lights)	0	0	0	0	0.0
Miscellaneous Loads	0	0	0	0	0.0
Internal Subtotal	0	0	0	0	-
RA (All Other)	0	0	0	0	0.0
DOA Direct to Zone	0	0	0	0	0.0
Ceiling	0	-172	0	-172	12.9
Refrigeration	0	0	0	0	0.0
Service Water	0	0	0	0	0.0
HVAC Equipment Losses	0	0	0	0	0.0
Adj Air Transfer Heat	0	0	0	0	0.0
Sizing Factor Correction	0	0	0	0	0.0
Time Delay Correction	0	0	0	0	0.0
Grand Total	-726	-614	0	-1341	100.0

Engineering Checks

Heating Mbh	-1.34	Input Ventilation cfm	17
Heating cfm	60.17	Calculated Ventilation cfm	17
ft²/Mbh	-108.73	Number of People	1.73
cfm/Mbh	-44.89	People per 1000 ft²	12
Conditioned ft²	145.7		

ZONE_VAV-1-18

Conditions at Time of Cooling Peak

Outside	DB / WB / HR	81.0 °F	/	70.3 °F	/	95.0 gr/lb
Zone	DB / RH / HR	75.0 °F	/	57.9 %	/	75.0 gr/lb

	Instant Sensible (Btu/h)	Time Delay Sensible (Btu/h)	Latent (Btu/h)	Total (Btu/h)	Percent of Total (%)
Roof	0	0	0	0	0.0
Other Roof	0	0	0	0	0.0
Glass	394	174	0	568	7.4
Door	0	32	0	32	0.4
Wall	0	0	0	0	0.0
Below-Grade Wall	0	0	0	0	0.0
Other Wall	0	0	0	0	0.0
Partition	0	187	0	187	2.4
Exterior Floor	0	0	0	0	0.0
Interior Floor	0	0	0	0	0.0
Slab	0	-130	0	-130	-1.7
Other Floor	0	0	0	0	0.0
Infiltration	0	0	0	0	0.0
Envelope Subtotal	394	263	0	656	-
People	1050	1366	2000	4415	57.2
Lights	492	754	0	1246	16.1
RA Sensible (Lights)	565	0	0	565	7.3
Miscellaneous Loads	560	379	0	940	12.2
Internal Subtotal	2668	2499	2000	7166	-
RA (All Other)	0	0	0	0	0.0
DOA Direct to Zone	0	0	0	0	0.0
Ceiling	0	22	0	22	0.3
Refrigeration	0	0	0	0	0.0
Service Water	0	0	0	0	0.0
HVAC Equipment Losses	0	0	0	0	0.0
Adj Air Transfer Heat	0	0	0	0	0.0
Sizing Factor Correction	0	0	0	0	0.0
Time Delay Correction	0	-127	0	-127	-1.6
Grand Total	3061	2656	2000	7717	100.0

Engineering Checks

Cooling tons	0.64	Input Ventilation cfm	76
Cooling cfm	845.19	Calculated Ventilation cfm	181
ft²/ton	675.59	Number of People	9.99
cfm/ton	1,313.97	People per 1000 ft²	23
Conditioned ft²	434.4		

Conditions at Time of Heating Peak

Outside	DB / WB / HR	16.4 °F	/	12.6 °F	/	5.3 gr/lb
Zone	DB / RH / HR	70.0 °F	/	4.9 %	/	5.2 gr/lb

	Instant Sensible (Btu/h)	Time Delay Sensible (Btu/h)	Latent (Btu/h)	Total (Btu/h)	Percent of Total (%)
Roof	0	0	0	0	0.0
Other Roof	0	0	0	0	0.0
Glass	-254	0	0	-254	93.9
Door	0	48	0	48	-17.6
Wall	0	0	0	0	0.0
Below-Grade Wall	0	0	0	0	0.0
Other Wall	0	0	0	0	0.0
Partition	0	114	0	114	-42.2
Exterior Floor	0	0	0	0	0.0
Interior Floor	0	0	0	0	0.0
Slab	0	3	0	3	-1.2
Other Floor	0	0	0	0	0.0
Infiltration	0	0	0	0	0.0
Envelope Subtotal	-254	165	0	-89	-
People	0	0	0	0	0.0
Lights	0	0	0	0	0.0
RA Sensible (Lights)	0	0	0	0	0.0
Miscellaneous Loads	0	0	0	0	0.0
Internal Subtotal	0	0	0	0	-
RA (All Other)	0	0	0	0	0.0
DOA Direct to Zone	0	0	0	0	0.0
Ceiling	0	-182	0	-182	67.1
Refrigeration	0	0	0	0	0.0
Service Water	0	0	0	0	0.0
HVAC Equipment Losses	0	0	0	0	0.0
Adj Air Transfer Heat	0	0	0	0	0.0
Sizing Factor Correction	0	0	0	0	0.0
Time Delay Correction	0	0	0	0	0.0
Grand Total	-254	-17	0	-271	100.0

Engineering Checks

Heating Mbh	-0.27	Input Ventilation cfm	76
Heating cfm	253.56	Calculated Ventilation cfm	73
ft²/Mbh	-1605.07	Number of People	9.99
cfm/Mbh	-936.71	People per 1000 ft²	23
Conditioned ft²	434.4		

ZONE_VAV-1-19

Conditions at Time of Cooling Peak

Outside	DB / WB / HR	83.6 °F	/	71.9 °F	/	99.4 gr/lb
Zone	DB / RH / HR	81.0 °F	/	39.9 %	/	62.8 gr/lb

	Instant Sensible (Btu/h)	Time Delay Sensible (Btu/h)	Latent (Btu/h)	Total (Btu/h)	Percent of Total (%)
Roof	0	0	0	0	0.0
Other Roof	0	0	0	0	0.0
Glass	0	0	0	0	0.0
Door	0	-27	0	-27	-3.2
Wall	0	0	0	0	0.0
Below-Grade Wall	0	0	0	0	0.0
Other Wall	0	0	0	0	0.0
Partition	0	49	0	49	5.9
Exterior Floor	0	0	0	0	0.0
Interior Floor	0	0	0	0	0.0
Slab	0	-41	0	-41	-5.0
Other Floor	0	0	0	0	0.0
Infiltration	0	0	0	0	0.0
Envelope Subtotal	0	-19	0	-19	-
People	0	0	0	0	0.0
Lights	99	176	0	275	33.2
RA Sensible (Lights)	113	0	0	113	13.7
Miscellaneous Loads	219	168	0	387	46.7
Internal Subtotal	431	344	0	774	-
RA (All Other)	0	0	0	0	0.0
DOA Direct to Zone	0	0	0	0	0.0
Ceiling	0	-19	0	-19	-2.3
Refrigeration	0	0	0	0	0.0
Service Water	0	0	0	0	0.0
HVAC Equipment Losses	0	0	0	0	0.0
Adj Air Transfer Heat	0	0	0	0	0.0
Sizing Factor Correction	91	0	0	91	11.0
Time Delay Correction	0	0	0	0	0.0
Grand Total	522	306	0	827	100.0

Engineering Checks

Cooling tons	0.07	Input Ventilation cfm	10
Cooling cfm	113.19	Calculated Ventilation cfm	24
ft²/ton	2462.07	Number of People	0.00
cfm/ton	1,641.31	People per 1000 ft²	0
Conditioned ft²	169.7		

Conditions at Time of Heating Peak

Outside	DB / WB / HR	32.0 °F	/	32.0 °F	/	0.0 gr/lb
Zone	DB / RH / HR	32.0 °F	/	0.0 %	/	0.0 gr/lb

	Instant Sensible (Btu/h)	Time Delay Sensible (Btu/h)	Latent (Btu/h)	Total (Btu/h)	Percent of Total (%)
Roof	0	0	0	0	0.0
Other Roof	0	0	0	0	0.0
Glass	0	0	0	0	0.0
Door	0	0	0	0	0.0
Wall	0	0	0	0	0.0
Below-Grade Wall	0	0	0	0	0.0
Other Wall	0	0	0	0	0.0
Partition	0	0	0	0	0.0
Exterior Floor	0	0	0	0	0.0
Interior Floor	0	0	0	0	0.0
Slab	0	0	0	0	0.0
Other Floor	0	0	0	0	0.0
Infiltration	0	0	0	0	0.0
Envelope Subtotal	0	0	0	0	-
People	0	0	0	0	0.0
Lights	0	0	0	0	0.0
RA Sensible (Lights)	0	0	0	0	0.0
Miscellaneous Loads	0	0	0	0	0.0
Internal Subtotal	0	0	0	0	-
RA (All Other)	0	0	0	0	0.0
DOA Direct to Zone	0	0	0	0	0.0
Ceiling	0	0	0	0	0.0
Refrigeration	0	0	0	0	0.0
Service Water	0	0	0	0	0.0
HVAC Equipment Losses	0	0	0	0	0.0
Adj Air Transfer Heat	0	0	0	0	0.0
Sizing Factor Correction	0	0	0	0	0.0
Time Delay Correction	0	0	0	0	0.0
Grand Total	0	0	0	0	100.0

Engineering Checks

Heating Mbh	0.00	Input Ventilation cfm	10
Heating cfm	33.96	Calculated Ventilation cfm	10
ft²/Mbh	0.00	Number of People	0.00
cfm/Mbh	0.00	People per 1000 ft²	0
Conditioned ft²	169.7		

ZONE_VAV-1-20

Conditions at Time of Cooling Peak

Outside	DB / WB / HR	82.2 °F	/	68.0 °F	/	80.3 gr/lb
Zone	DB / RH / HR	75.0 °F	/	59.7 %	/	77.3 gr/lb

	Instant Sensible (Btu/h)	Time Delay Sensible (Btu/h)	Latent (Btu/h)	Total (Btu/h)	Percent of Total (%)
Roof	0	0	0	0	0.0
Other Roof	0	0	0	0	0.0
Glass	0	0	0	0	0.0
Door	0	2	0	2	0.0
Wall	0	0	0	0	0.0
Below-Grade Wall	0	0	0	0	0.0
Other Wall	0	0	0	0	0.0
Partition	0	170	0	170	4.2
Exterior Floor	0	0	0	0	0.0
Interior Floor	0	0	0	0	0.0
Slab	0	-71	0	-71	-1.8
Other Floor	0	0	0	0	0.0
Infiltration	0	0	0	0	0.0
Envelope Subtotal	0	101	0	101	-
People	630	803	1200	2632	65.3
Lights	220	365	0	584	14.5
RA Sensible (Lights)	252	0	0	252	6.3
Miscellaneous Loads	250	178	0	428	10.6
Internal Subtotal	1352	1345	1200	3897	-
RA (All Other)	0	0	0	0	0.0
DOA Direct to Zone	0	0	0	0	0.0
Ceiling	0	45	0	45	1.1
Refrigeration	0	0	0	0	0.0
Service Water	0	0	0	0	0.0
HVAC Equipment Losses	0	0	0	0	0.0
Adj Air Transfer Heat	0	0	0	0	0.0
Sizing Factor Correction	0	0	0	0	0.0
Time Delay Correction	0	-10	0	-10	-0.2
Grand Total	1352	1482	1200	4034	100.0

Engineering Checks

Cooling tons	0.34	Input Ventilation cfm	42
Cooling cfm	462.61	Calculated Ventilation cfm	99
ft²/ton	577.06	Number of People	6.01
cfm/ton	1,375.90	People per 1000 ft²	31
Conditioned ft²	194.0		

Conditions at Time of Heating Peak

Outside	DB / WB / HR	32.0 °F	/	32.0 °F	/	0.0 gr/lb
Zone	DB / RH / HR	32.0 °F	/	0.0 %	/	0.0 gr/lb

	Instant Sensible (Btu/h)	Time Delay Sensible (Btu/h)	Latent (Btu/h)	Total (Btu/h)	Percent of Total (%)
Roof	0	0	0	0	0.0
Other Roof	0	0	0	0	0.0
Glass	0	0	0	0	0.0
Door	0	0	0	0	0.0
Wall	0	0	0	0	0.0
Below-Grade Wall	0	0	0	0	0.0
Other Wall	0	0	0	0	0.0
Partition	0	0	0	0	0.0
Exterior Floor	0	0	0	0	0.0
Interior Floor	0	0	0	0	0.0
Slab	0	0	0	0	0.0
Other Floor	0	0	0	0	0.0
Infiltration	0	0	0	0	0.0
Envelope Subtotal	0	0	0	0	-
People	0	0	0	0	0.0
Lights	0	0	0	0	0.0
RA Sensible (Lights)	0	0	0	0	0.0
Miscellaneous Loads	0	0	0	0	0.0
Internal Subtotal	0	0	0	0	-
RA (All Other)	0	0	0	0	0.0
DOA Direct to Zone	0	0	0	0	0.0
Ceiling	0	0	0	0	0.0
Refrigeration	0	0	0	0	0.0
Service Water	0	0	0	0	0.0
HVAC Equipment Losses	0	0	0	0	0.0
Adj Air Transfer Heat	0	0	0	0	0.0
Sizing Factor Correction	0	0	0	0	0.0
Time Delay Correction	0	0	0	0	0.0
Grand Total	0	0	0	0	100.0

Engineering Checks

Heating Mbh	0.00	Input Ventilation cfm	42
Heating cfm	138.78	Calculated Ventilation cfm	40
ft²/Mbh	0.00	Number of People	6.01
cfm/Mbh	0.00	People per 1000 ft²	31
Conditioned ft²	194.0		

ZONE_VAV-1-21

Conditions at Time of Cooling Peak

Outside	DB / WB / HR	82.5 °F	/	71.6 °F	/	99.4 gr/lb
Zone	DB / RH / HR	75.0 °F	/	60.4 %	/	78.2 gr/lb

	Instant Sensible (Btu/h)	Time Delay Sensible (Btu/h)	Latent (Btu/h)	Total (Btu/h)	Percent of Total (%)
Roof	0	0	0	0	0.0
Other Roof	0	0	0	0	0.0
Glass	0	0	0	0	0.0
Door	0	-12	0	-12	-0.2
Wall	0	0	0	0	0.0
Below-Grade Wall	0	0	0	0	0.0
Other Wall	0	0	0	0	0.0
Partition	0	522	0	522	8.2
Exterior Floor	0	0	0	0	0.0
Interior Floor	0	0	0	0	0.0
Slab	0	-109	0	-109	-1.7
Other Floor	0	0	0	0	0.0
Infiltration	0	0	0	0	0.0
Envelope Subtotal	0	401	0	401	-
People	1050	1508	2000	4557	71.9
Lights	243	422	0	664	10.5
RA Sensible (Lights)	279	0	0	279	4.4
Miscellaneous Loads	276	206	0	482	7.6
Internal Subtotal	1847	2135	2000	5982	-
RA (All Other)	0	0	0	0	0.0
DOA Direct to Zone	0	0	0	0	0.0
Ceiling	0	-32	0	-32	-0.5
Refrigeration	0	0	0	0	0.0
Service Water	0	0	0	0	0.0
HVAC Equipment Losses	0	0	0	0	0.0
Adj Air Transfer Heat	0	0	0	0	0.0
Sizing Factor Correction	0	0	0	0	0.0
Time Delay Correction	0	-16	0	-16	-0.3
Grand Total	1847	2489	2000	6336	100.0

Engineering Checks

Cooling tons	0.53	Input Ventilation cfm	63
Cooling cfm	698.37	Calculated Ventilation cfm	150
ft²/ton	405.73	Number of People	10.00
cfm/ton	1,322.44	People per 1000 ft²	47
Conditioned ft²	214.2		

Conditions at Time of Heating Peak

Outside	DB / WB / HR	32.0 °F	/	32.0 °F	/	0.0 gr/lb
Zone	DB / RH / HR	32.0 °F	/	0.0 %	/	0.0 gr/lb

	Instant Sensible (Btu/h)	Time Delay Sensible (Btu/h)	Latent (Btu/h)	Total (Btu/h)	Percent of Total (%)
Roof	0	0	0	0	0.0
Other Roof	0	0	0	0	0.0
Glass	0	0	0	0	0.0
Door	0	0	0	0	0.0
Wall	0	0	0	0	0.0
Below-Grade Wall	0	0	0	0	0.0
Other Wall	0	0	0	0	0.0
Partition	0	0	0	0	0.0
Exterior Floor	0	0	0	0	0.0
Interior Floor	0	0	0	0	0.0
Slab	0	0	0	0	0.0
Other Floor	0	0	0	0	0.0
Infiltration	0	0	0	0	0.0
Envelope Subtotal	0	0	0	0	-
People	0	0	0	0	0.0
Lights	0	0	0	0	0.0
RA Sensible (Lights)	0	0	0	0	0.0
Miscellaneous Loads	0	0	0	0	0.0
Internal Subtotal	0	0	0	0	-
RA (All Other)	0	0	0	0	0.0
DOA Direct to Zone	0	0	0	0	0.0
Ceiling	0	0	0	0	0.0
Refrigeration	0	0	0	0	0.0
Service Water	0	0	0	0	0.0
HVAC Equipment Losses	0	0	0	0	0.0
Adj Air Transfer Heat	0	0	0	0	0.0
Sizing Factor Correction	0	0	0	0	0.0
Time Delay Correction	0	0	0	0	0.0
Grand Total	0	0	0	0	100.0

Engineering Checks

Heating Mbh	0.00	Input Ventilation cfm	63
Heating cfm	209.51	Calculated Ventilation cfm	60
ft²/Mbh	0.00	Number of People	10.00
cfm/Mbh	0.00	People per 1000 ft²	47
Conditioned ft²	214.2		

ZONE_VAV-1-22

Conditions at Time of Cooling Peak

Outside	DB / WB / HR	84.2 °F	/	68.6 °F	/	80.3 gr/lb
Zone	DB / RH / HR	75.0 °F	/	51.2 %	/	66.2 gr/lb

	Instant Sensible (Btu/h)	Time Delay Sensible (Btu/h)	Latent (Btu/h)	Total (Btu/h)	Percent of Total (%)
Roof	0	0	0	0	0.0
Other Roof	0	0	0	0	0.0
Glass	0	0	0	0	0.0
Door	0	22	0	22	0.5
Wall	0	0	0	0	0.0
Below-Grade Wall	0	0	0	0	0.0
Other Wall	0	0	0	0	0.0
Partition	0	57	0	57	1.3
Exterior Floor	0	0	0	0	0.0
Interior Floor	0	0	0	0	0.0
Slab	0	2	0	2	0.0
Other Floor	0	0	0	0	0.0
Infiltration	0	0	0	0	0.0
Envelope Subtotal	0	81	0	81	-
People	210	261	400	871	19.7
Lights	290	469	0	760	17.2
RA Sensible (Lights)	333	0	0	333	7.5
Miscellaneous Loads	1400	970	0	2370	53.6
Internal Subtotal	2234	1700	400	4334	-
RA (All Other)	0	0	0	0	0.0
DOA Direct to Zone	0	0	0	0	0.0
Ceiling	0	12	0	12	0.3
Refrigeration	0	0	0	0	0.0
Service Water	0	0	0	0	0.0
HVAC Equipment Losses	0	0	0	0	0.0
Adj Air Transfer Heat	0	0	0	0	0.0
Sizing Factor Correction	0	0	0	0	0.0
Time Delay Correction	0	-3	0	-3	-0.1
Grand Total	2234	1789	400	4423	100.0

Engineering Checks

Cooling tons	0.37	Input Ventilation cfm	27
Cooling cfm	300.46	Calculated Ventilation cfm	46
ft²/ton	770.71	Number of People	2.00
cfm/ton	814.97	People per 1000 ft²	7
Conditioned ft²	284.1		

Conditions at Time of Heating Peak

Outside	DB / WB / HR	16.4 °F	/	12.6 °F	/	5.3 gr/lb
Zone	DB / RH / HR	70.0 °F	/	4.9 %	/	5.2 gr/lb

	Instant Sensible (Btu/h)	Time Delay Sensible (Btu/h)	Latent (Btu/h)	Total (Btu/h)	Percent of Total (%)
Roof	0	0	0	0	0.0
Other Roof	0	0	0	0	0.0
Glass	0	0	0	0	0.0
Door	0	-19	0	-19	12.1
Wall	0	0	0	0	0.0
Below-Grade Wall	0	0	0	0	0.0
Other Wall	0	0	0	0	0.0
Partition	0	-47	0	-47	30.4
Exterior Floor	0	0	0	0	0.0
Interior Floor	0	0	0	0	0.0
Slab	0	1	0	1	-0.8
Other Floor	0	0	0	0	0.0
Infiltration	0	0	0	0	0.0
Envelope Subtotal	0	-64	0	-64	-
People	0	0	0	0	0.0
Lights	0	0	0	0	0.0
RA Sensible (Lights)	0	0	0	0	0.0
Miscellaneous Loads	0	0	0	0	0.0
Internal Subtotal	0	0	0	0	-
RA (All Other)	0	0	0	0	0.0
DOA Direct to Zone	0	0	0	0	0.0
Ceiling	0	-89	0	-89	58.3
Refrigeration	0	0	0	0	0.0
Service Water	0	0	0	0	0.0
HVAC Equipment Losses	0	0	0	0	0.0
Adj Air Transfer Heat	0	0	0	0	0.0
Sizing Factor Correction	0	0	0	0	0.0
Time Delay Correction	0	0	0	0	0.0
Grand Total	0	-153	0	-153	100.0

Engineering Checks

Heating Mbh	-0.15	Input Ventilation cfm	27
Heating cfm	90.14	Calculated Ventilation cfm	26
ft²/Mbh	-1854.37	Number of People	2.00
cfm/Mbh	-588.37	People per 1000 ft²	7
Conditioned ft²	284.1		

ZONE_VAV-1-23

Conditions at Time of Cooling Peak

Outside	DB / WB / HR	79.9 °F	/	70.0 °F	/	94.9 gr/lb
Zone	DB / RH / HR	74.9 °F	/	62.7 %	/	81.1 gr/lb

	Instant Sensible (Btu/h)	Time Delay Sensible (Btu/h)	Latent (Btu/h)	Total (Btu/h)	Percent of Total (%)
Roof	0	0	0	0	0.0
Other Roof	0	0	0	0	0.0
Glass	124	170	0	295	2.7
Door	0	0	0	0	0.0
Wall	0	0	0	0	0.0
Below-Grade Wall	0	0	0	0	0.0
Other Wall	0	0	0	0	0.0
Partition	0	-1015	0	-1015	-9.3
Exterior Floor	0	0	0	0	0.0
Interior Floor	0	0	0	0	0.0
Slab	0	-147	0	-147	-1.3
Other Floor	0	0	0	0	0.0
Infiltration	0	0	0	0	0.0
Envelope Subtotal	124	-991	0	-867	-
People	1030	1505	2452	4987	45.8
Lights	90	145	0	235	2.2
RA Sensible (Lights)	103	0	0	103	0.9
Miscellaneous Loads	3222	2349	1541	7111	65.3
Internal Subtotal	4445	3999	3993	12437	-
RA (All Other)	0	0	0	0	0.0
DOA Direct to Zone	0	0	0	0	0.0
Ceiling	0	-264	0	-264	-2.4
Refrigeration	0	0	0	0	0.0
Service Water	0	0	0	0	0.0
HVAC Equipment Losses	0	0	0	0	0.0
Adj Air Transfer Heat	0	0	0	0	0.0
Sizing Factor Correction	0	0	0	0	0.0
Time Delay Correction	0	-422	0	-422	-3.9
Grand Total	4569	2321	3993	10883	100.0

Engineering Checks

Cooling tons	0.91	Input Ventilation cfm	61
Cooling cfm	673.87	Calculated Ventilation cfm	103
ft²/ton	147.54	Number of People	8.94
cfm/ton	742.87	People per 1000 ft²	67
Conditioned ft²	133.8		

Conditions at Time of Heating Peak

Outside	DB / WB / HR	16.4 °F	/	12.6 °F	/	5.3 gr/lb
Zone	DB / RH / HR	70.0 °F	/	4.9 %	/	5.2 gr/lb

	Instant Sensible (Btu/h)	Time Delay Sensible (Btu/h)	Latent (Btu/h)	Total (Btu/h)	Percent of Total (%)
Roof	0	0	0	0	0.0
Other Roof	0	0	0	0	0.0
Glass	-153	0	0	-153	97.0
Door	0	0	0	0	0.0
Wall	0	0	0	0	0.0
Below-Grade Wall	0	0	0	0	0.0
Other Wall	0	0	0	0	0.0
Partition	0	47	0	47	-29.6
Exterior Floor	0	0	0	0	0.0
Interior Floor	0	0	0	0	0.0
Slab	0	0	0	0	0.1
Other Floor	0	0	0	0	0.0
Infiltration	0	0	0	0	0.0
Envelope Subtotal	-153	47	0	-107	-
People	0	0	0	0	0.0
Lights	0	0	0	0	0.0
RA Sensible (Lights)	0	0	0	0	0.0
Miscellaneous Loads	0	0	0	0	0.0
Internal Subtotal	0	0	0	0	-
RA (All Other)	0	0	0	0	0.0
DOA Direct to Zone	0	0	0	0	0.0
Ceiling	0	-51	0	-51	32.5
Refrigeration	0	0	0	0	0.0
Service Water	0	0	0	0	0.0
HVAC Equipment Losses	0	0	0	0	0.0
Adj Air Transfer Heat	0	0	0	0	0.0
Sizing Factor Correction	0	0	0	0	0.0
Time Delay Correction	0	0	0	0	0.0
Grand Total	-153	-5	0	-158	100.0

Engineering Checks

Heating Mbh	-0.16	Input Ventilation cfm	61
Heating cfm	202.16	Calculated Ventilation cfm	57
ft²/Mbh	-846.58	Number of People	8.94
cfm/Mbh	-1,279.05	People per 1000 ft²	67
Conditioned ft²	133.8		

ZONE_VAV-1-24

Conditions at Time of Cooling Peak

Outside	DB / WB / HR	84.2 °F	/	68.6 °F	/	80.3 gr/lb
Zone	DB / RH / HR	75.0 °F	/	51.1 %	/	66.1 gr/lb

	Instant Sensible (Btu/h)	Time Delay Sensible (Btu/h)	Latent (Btu/h)	Total (Btu/h)	Percent of Total (%)
Roof	0	0	0	0	0.0
Other Roof	0	0	0	0	0.0
Glass	0	0	0	0	0.0
Door	0	20	0	20	0.4
Wall	0	0	0	0	0.0
Below-Grade Wall	0	0	0	0	0.0
Other Wall	0	0	0	0	0.0
Partition	0	145	0	145	3.2
Exterior Floor	0	0	0	0	0.0
Interior Floor	0	0	0	0	0.0
Slab	0	-11	0	-11	-0.2
Other Floor	0	0	0	0	0.0
Infiltration	0	0	0	0	0.0
Envelope Subtotal	0	154	0	154	-
People	210	267	400	877	19.1
Lights	296	494	0	790	17.2
RA Sensible (Lights)	340	0	0	340	7.4
Miscellaneous Loads	1412	1010	0	2422	52.7
Internal Subtotal	2258	1772	400	4429	-
RA (All Other)	0	0	0	0	0.0
DOA Direct to Zone	0	0	0	0	0.0
Ceiling	0	13	0	13	0.3
Refrigeration	0	0	0	0	0.0
Service Water	0	0	0	0	0.0
HVAC Equipment Losses	0	0	0	0	0.0
Adj Air Transfer Heat	0	0	0	0	0.0
Sizing Factor Correction	0	0	0	0	0.0
Time Delay Correction	0	-3	0	-3	-0.1
Grand Total	2258	1936	400	4593	100.0

Engineering Checks

Cooling tons	0.38	Input Ventilation cfm	27
Cooling cfm	304.11	Calculated Ventilation cfm	46
ft²/ton	756.55	Number of People	2.00
cfm/ton	794.36	People per 1000 ft²	7
Conditioned ft²	289.5		

Conditions at Time of Heating Peak

Outside	DB / WB / HR	16.4 °F	/	12.6 °F	/	5.3 gr/lb
Zone	DB / RH / HR	70.0 °F	/	4.9 %	/	5.2 gr/lb

	Instant Sensible (Btu/h)	Time Delay Sensible (Btu/h)	Latent (Btu/h)	Total (Btu/h)	Percent of Total (%)
Roof	0	0	0	0	0.0
Other Roof	0	0	0	0	0.0
Glass	0	0	0	0	0.0
Door	0	-17	0	-17	7.8
Wall	0	0	0	0	0.0
Below-Grade Wall	0	0	0	0	0.0
Other Wall	0	0	0	0	0.0
Partition	0	-103	0	-103	47.1
Exterior Floor	0	0	0	0	0.0
Interior Floor	0	0	0	0	0.0
Slab	0	1	0	1	-0.3
Other Floor	0	0	0	0	0.0
Infiltration	0	0	0	0	0.0
Envelope Subtotal	0	-120	0	-120	-
People	0	0	0	0	0.0
Lights	0	0	0	0	0.0
RA Sensible (Lights)	0	0	0	0	0.0
Miscellaneous Loads	0	0	0	0	0.0
Internal Subtotal	0	0	0	0	-
RA (All Other)	0	0	0	0	0.0
DOA Direct to Zone	0	0	0	0	0.0
Ceiling	0	-100	0	-100	45.5
Refrigeration	0	0	0	0	0.0
Service Water	0	0	0	0	0.0
HVAC Equipment Losses	0	0	0	0	0.0
Adj Air Transfer Heat	0	0	0	0	0.0
Sizing Factor Correction	0	0	0	0	0.0
Time Delay Correction	0	0	0	0	0.0
Grand Total	0	-220	0	-220	100.0

Engineering Checks

Heating Mbh	-0.22	Input Ventilation cfm	27
Heating cfm	91.23	Calculated Ventilation cfm	26
ft²/Mbh	-1319.00	Number of People	2.00
cfm/Mbh	-415.56	People per 1000 ft²	7
Conditioned ft²	289.5		

ZONE_VAV-1-25

Conditions at Time of Cooling Peak

Outside	DB / WB / HR	84.2 °F	/	68.6 °F	/	80.3 gr/lb
Zone	DB / RH / HR	75.0 °F	/	51.2 %	/	66.2 gr/lb

	Instant Sensible (Btu/h)	Time Delay Sensible (Btu/h)	Latent (Btu/h)	Total (Btu/h)	Percent of Total (%)
Roof	0	0	0	0	0.0
Other Roof	0	0	0	0	0.0
Glass	0	0	0	0	0.0
Door	0	-10	0	-10	-0.5
Wall	0	0	0	0	0.0
Below-Grade Wall	0	0	0	0	0.0
Other Wall	0	0	0	0	0.0
Partition	0	87	0	87	3.9
Exterior Floor	0	0	0	0	0.0
Interior Floor	0	0	0	0	0.0
Slab	0	-16	0	-16	-0.7
Other Floor	0	0	0	0	0.0
Infiltration	0	0	0	0	0.0
Envelope Subtotal	0	61	0	61	-
People	105	140	200	445	20.1
Lights	134	237	0	371	16.8
RA Sensible (Lights)	154	0	0	154	6.9
Miscellaneous Loads	677	515	0	1192	53.8
Internal Subtotal	1070	892	200	2161	-
RA (All Other)	0	0	0	0	0.0
DOA Direct to Zone	0	0	0	0	0.0
Ceiling	0	-6	0	-6	-0.3
Refrigeration	0	0	0	0	0.0
Service Water	0	0	0	0	0.0
HVAC Equipment Losses	0	0	0	0	0.0
Adj Air Transfer Heat	0	0	0	0	0.0
Sizing Factor Correction	0	0	0	0	0.0
Time Delay Correction	0	-2	0	-2	-0.1
Grand Total	1070	945	200	2214	100.0

Engineering Checks

Cooling tons	0.18	Input Ventilation cfm	13
Cooling cfm	142.78	Calculated Ventilation cfm	22
ft²/ton	709.38	Number of People	1.00
cfm/ton	773.63	People per 1000 ft²	8
Conditioned ft²	130.9		

Conditions at Time of Heating Peak

Outside	DB / WB / HR	16.4 °F	/	12.6 °F	/	5.3 gr/lb
Zone	DB / RH / HR	70.0 °F	/	4.9 %	/	5.2 gr/lb

	Instant Sensible (Btu/h)	Time Delay Sensible (Btu/h)	Latent (Btu/h)	Total (Btu/h)	Percent of Total (%)
Roof	0	0	0	0	0.0
Other Roof	0	0	0	0	0.0
Glass	0	0	0	0	0.0
Door	0	6	0	6	-11.3
Wall	0	0	0	0	0.0
Below-Grade Wall	0	0	0	0	0.0
Other Wall	0	0	0	0	0.0
Partition	0	-23	0	-23	40.6
Exterior Floor	0	0	0	0	0.0
Interior Floor	0	0	0	0	0.0
Slab	0	2	0	2	-3.9
Other Floor	0	0	0	0	0.0
Infiltration	0	0	0	0	0.0
Envelope Subtotal	0	-14	0	-14	-
People	0	0	0	0	0.0
Lights	0	0	0	0	0.0
RA Sensible (Lights)	0	0	0	0	0.0
Miscellaneous Loads	0	0	0	0	0.0
Internal Subtotal	0	0	0	0	-
RA (All Other)	0	0	0	0	0.0
DOA Direct to Zone	0	0	0	0	0.0
Ceiling	0	-42	0	-42	74.5
Refrigeration	0	0	0	0	0.0
Service Water	0	0	0	0	0.0
HVAC Equipment Losses	0	0	0	0	0.0
Adj Air Transfer Heat	0	0	0	0	0.0
Sizing Factor Correction	0	0	0	0	0.0
Time Delay Correction	0	0	0	0	0.0
Grand Total	0	-56	0	-56	100.0

Engineering Checks

Heating Mbh	-0.06	Input Ventilation cfm	13
Heating cfm	42.84	Calculated Ventilation cfm	12
ft²/Mbh	-2325.71	Number of People	1.00
cfm/Mbh	-761.05	People per 1000 ft²	8
Conditioned ft²	130.9		

ZONE_VAV-1-26

Conditions at Time of Cooling Peak

Outside	DB / WB / HR	89.9 °F	/	73.1 °F	/	96.6 gr/lb
Zone	DB / RH / HR	75.0 °F	/	51.1 %	/	66.1 gr/lb

	Instant Sensible (Btu/h)	Time Delay Sensible (Btu/h)	Latent (Btu/h)	Total (Btu/h)	Percent of Total (%)
Roof	0	0	0	0	0.0
Other Roof	0	0	0	0	0.0
Glass	0	0	0	0	0.0
Door	0	12	0	12	0.7
Wall	0	0	0	0	0.0
Below-Grade Wall	0	0	0	0	0.0
Other Wall	0	0	0	0	0.0
Partition	0	309	0	309	17.9
Exterior Floor	0	0	0	0	0.0
Interior Floor	0	0	0	0	0.0
Slab	0	-28	0	-28	-1.6
Other Floor	0	0	0	0	0.0
Infiltration	0	0	0	0	0.0
Envelope Subtotal	0	292	0	292	-
People	77	95	148	320	18.5
Lights	151	238	0	389	22.6
RA Sensible (Lights)	173	0	0	173	10.0
Miscellaneous Loads	302	205	0	507	29.4
Internal Subtotal	704	537	148	1389	-
RA (All Other)	0	0	0	0	0.0
DOA Direct to Zone	0	0	0	0	0.0
Ceiling	0	45	0	45	2.6
Refrigeration	0	0	0	0	0.0
Service Water	0	0	0	0	0.0
HVAC Equipment Losses	0	0	0	0	0.0
Adj Air Transfer Heat	0	0	0	0	0.0
Sizing Factor Correction	0	0	0	0	0.0
Time Delay Correction	0	-1	0	-1	-0.1
Grand Total	704	874	148	1725	100.0

Engineering Checks

Cooling tons	0.14	Input Ventilation cfm	13
Cooling cfm	139.44	Calculated Ventilation cfm	21
ft²/ton	1027.29	Number of People	0.74
cfm/ton	969.66	People per 1000 ft²	5
Conditioned ft²	147.7		

Conditions at Time of Heating Peak

Outside	DB / WB / HR	16.4 °F	/	12.6 °F	/	5.3 gr/lb
Zone	DB / RH / HR	70.0 °F	/	4.9 %	/	5.2 gr/lb

	Instant Sensible (Btu/h)	Time Delay Sensible (Btu/h)	Latent (Btu/h)	Total (Btu/h)	Percent of Total (%)
Roof	0	0	0	0	0.0
Other Roof	0	0	0	0	0.0
Glass	0	0	0	0	0.0
Door	0	-7	0	-7	3.9
Wall	0	0	0	0	0.0
Below-Grade Wall	0	0	0	0	0.0
Other Wall	0	0	0	0	0.0
Partition	0	-110	0	-110	61.0
Exterior Floor	0	0	0	0	0.0
Interior Floor	0	0	0	0	0.0
Slab	0	-1	0	-1	0.5
Other Floor	0	0	0	0	0.0
Infiltration	0	0	0	0	0.0
Envelope Subtotal	0	-118	0	-118	-
People	0	0	0	0	0.0
Lights	0	0	0	0	0.0
RA Sensible (Lights)	0	0	0	0	0.0
Miscellaneous Loads	0	0	0	0	0.0
Internal Subtotal	0	0	0	0	-
RA (All Other)	0	0	0	0	0.0
DOA Direct to Zone	0	0	0	0	0.0
Ceiling	0	-62	0	-62	34.6
Refrigeration	0	0	0	0	0.0
Service Water	0	0	0	0	0.0
HVAC Equipment Losses	0	0	0	0	0.0
Adj Air Transfer Heat	0	0	0	0	0.0
Sizing Factor Correction	0	0	0	0	0.0
Time Delay Correction	0	0	0	0	0.0
Grand Total	0	-181	0	-181	100.0

Engineering Checks

Heating Mbh	-0.18	Input Ventilation cfm	13
Heating cfm	41.83	Calculated Ventilation cfm	12
ft²/Mbh	-818.23	Number of People	0.74
cfm/Mbh	-231.74	People per 1000 ft²	5
Conditioned ft²	147.7		

ZONE_VAV-1-27

Conditions at Time of Cooling Peak

Outside	DB / WB / HR	83.6 °F	/	71.9 °F	/	99.4 gr/lb
Zone	DB / RH / HR	75.0 °F	/	49.0 %	/	63.3 gr/lb

	Instant Sensible (Btu/h)	Time Delay Sensible (Btu/h)	Latent (Btu/h)	Total (Btu/h)	Percent of Total (%)
Roof	0	0	0	0	0.0
Other Roof	0	0	0	0	0.0
Glass	0	0	0	0	0.0
Door	0	37	0	37	0.6
Wall	0	0	0	0	0.0
Below-Grade Wall	0	0	0	0	0.0
Other Wall	0	0	0	0	0.0
Partition	0	1728	0	1728	30.1
Exterior Floor	0	0	0	0	0.0
Interior Floor	0	0	0	0	0.0
Slab	0	-29	0	-29	-0.5
Other Floor	0	0	0	0	0.0
Infiltration	0	0	0	0	0.0
Envelope Subtotal	0	1736	0	1736	-
People	50	79	79	208	3.6
Lights	556	966	0	1523	26.5
RA Sensible (Lights)	639	0	0	639	11.1
Miscellaneous Loads	871	648	0	1519	26.4
Internal Subtotal	2116	1694	79	3889	-
RA (All Other)	0	0	0	0	0.0
DOA Direct to Zone	0	0	0	0	0.0
Ceiling	0	124	0	124	2.2
Refrigeration	0	0	0	0	0.0
Service Water	0	0	0	0	0.0
HVAC Equipment Losses	0	0	0	0	0.0
Adj Air Transfer Heat	0	0	0	0	0.0
Sizing Factor Correction	0	0	0	0	0.0
Time Delay Correction	0	-1	0	-1	0.0
Grand Total	2116	3553	79	5748	100.0

Engineering Checks

Cooling tons	0.48	Input Ventilation cfm	10
Cooling cfm	230.13	Calculated Ventilation cfm	35
ft²/ton	1409.94	Number of People	0.51
cfm/ton	480.33	People per 1000 ft²	1
Conditioned ft²	675.3		

Conditions at Time of Heating Peak

Outside	DB / WB / HR	32.0 °F	/	32.0 °F	/	0.0 gr/lb
Zone	DB / RH / HR	32.0 °F	/	0.0 %	/	0.0 gr/lb

	Instant Sensible (Btu/h)	Time Delay Sensible (Btu/h)	Latent (Btu/h)	Total (Btu/h)	Percent of Total (%)
Roof	0	0	0	0	0.0
Other Roof	0	0	0	0	0.0
Glass	0	0	0	0	0.0
Door	0	0	0	0	0.0
Wall	0	0	0	0	0.0
Below-Grade Wall	0	0	0	0	0.0
Other Wall	0	0	0	0	0.0
Partition	0	0	0	0	0.0
Exterior Floor	0	0	0	0	0.0
Interior Floor	0	0	0	0	0.0
Slab	0	0	0	0	0.0
Other Floor	0	0	0	0	0.0
Infiltration	0	0	0	0	0.0
Envelope Subtotal	0	0	0	0	-
People	0	0	0	0	0.0
Lights	0	0	0	0	0.0
RA Sensible (Lights)	0	0	0	0	0.0
Miscellaneous Loads	0	0	0	0	0.0
Internal Subtotal	0	0	0	0	-
RA (All Other)	0	0	0	0	0.0
DOA Direct to Zone	0	0	0	0	0.0
Ceiling	0	0	0	0	0.0
Refrigeration	0	0	0	0	0.0
Service Water	0	0	0	0	0.0
HVAC Equipment Losses	0	0	0	0	0.0
Adj Air Transfer Heat	0	0	0	0	0.0
Sizing Factor Correction	0	0	0	0	0.0
Time Delay Correction	0	0	0	0	0.0
Grand Total	0	0	0	0	100.0

Engineering Checks

Heating Mbh	0.00	Input Ventilation cfm	10
Heating cfm	69.04	Calculated Ventilation cfm	20
ft²/Mbh	0.00	Number of People	0.51
cfm/Mbh	0.00	People per 1000 ft²	1
Conditioned ft²	675.3		

ZONE_VAV-1-28

Conditions at Time of Cooling Peak

Outside	DB / WB / HR	90.3 °F	/	73.3 °F	/	96.6 gr/lb
Zone	DB / RH / HR	75.0 °F	/	51.0 %	/	66.0 gr/lb

	Instant Sensible (Btu/h)	Time Delay Sensible (Btu/h)	Latent (Btu/h)	Total (Btu/h)	Percent of Total (%)
Roof	0	0	0	0	0.0
Other Roof	0	0	0	0	0.0
Glass	0	0	0	0	0.0
Door	0	25	0	25	0.5
Wall	0	0	0	0	0.0
Below-Grade Wall	0	0	0	0	0.0
Other Wall	0	0	0	0	0.0
Partition	0	227	0	227	4.8
Exterior Floor	0	0	0	0	0.0
Interior Floor	0	0	0	0	0.0
Slab	0	-17	0	-17	-0.4
Other Floor	0	0	0	0	0.0
Infiltration	0	0	0	0	0.0
Envelope Subtotal	0	235	0	235	-
People	210	260	400	869	18.3
Lights	306	493	0	798	16.8
RA Sensible (Lights)	351	0	0	351	7.4
Miscellaneous Loads	1431	988	0	2419	50.8
Internal Subtotal	2298	1740	400	4438	-
RA (All Other)	0	0	0	0	0.0
DOA Direct to Zone	0	0	0	0	0.0
Ceiling	0	88	0	88	1.8
Refrigeration	0	0	0	0	0.0
Service Water	0	0	0	0	0.0
HVAC Equipment Losses	0	0	0	0	0.0
Adj Air Transfer Heat	0	0	0	0	0.0
Sizing Factor Correction	0	0	0	0	0.0
Time Delay Correction	0	-3	0	-3	-0.1
Grand Total	2298	2060	400	4757	100.0

Engineering Checks

Cooling tons	0.40	Input Ventilation cfm	28
Cooling cfm	310.40	Calculated Ventilation cfm	47
ft²/ton	754.05	Number of People	2.00
cfm/ton	782.81	People per 1000 ft²	7
Conditioned ft²	298.9		

Conditions at Time of Heating Peak

Outside	DB / WB / HR	16.4 °F	/	12.6 °F	/	5.3 gr/lb
Zone	DB / RH / HR	70.0 °F	/	4.9 %	/	5.2 gr/lb

	Instant Sensible (Btu/h)	Time Delay Sensible (Btu/h)	Latent (Btu/h)	Total (Btu/h)	Percent of Total (%)
Roof	0	0	0	0	0.0
Other Roof	0	0	0	0	0.0
Glass	0	0	0	0	0.0
Door	0	-22	0	-22	5.1
Wall	0	0	0	0	0.0
Below-Grade Wall	0	0	0	0	0.0
Other Wall	0	0	0	0	0.0
Partition	0	-219	0	-219	51.7
Exterior Floor	0	0	0	0	0.0
Interior Floor	0	0	0	0	0.0
Slab	0	-1	0	-1	0.2
Other Floor	0	0	0	0	0.0
Infiltration	0	0	0	0	0.0
Envelope Subtotal	0	-242	0	-242	-
People	0	0	0	0	0.0
Lights	0	0	0	0	0.0
RA Sensible (Lights)	0	0	0	0	0.0
Miscellaneous Loads	0	0	0	0	0.0
Internal Subtotal	0	0	0	0	-
RA (All Other)	0	0	0	0	0.0
DOA Direct to Zone	0	0	0	0	0.0
Ceiling	0	-182	0	-182	42.9
Refrigeration	0	0	0	0	0.0
Service Water	0	0	0	0	0.0
HVAC Equipment Losses	0	0	0	0	0.0
Adj Air Transfer Heat	0	0	0	0	0.0
Sizing Factor Correction	0	0	0	0	0.0
Time Delay Correction	0	0	0	0	0.0
Grand Total	0	-423	0	-423	100.0

Engineering Checks

Heating Mbh	-0.42	Input Ventilation cfm	28
Heating cfm	93.12	Calculated Ventilation cfm	26
ft²/Mbh	-706.22	Number of People	2.00
cfm/Mbh	-219.99	People per 1000 ft²	7
Conditioned ft²	298.9		

ZONE_VAV-1-29

Conditions at Time of Cooling Peak

Outside	DB / WB / HR	83.2 °F	/	71.0 °F	/	95.0 gr/lb
Zone	DB / RH / HR	75.0 °F	/	51.7 %	/	66.8 gr/lb

	Instant Sensible (Btu/h)	Time Delay Sensible (Btu/h)	Latent (Btu/h)	Total (Btu/h)	Percent of Total (%)
Roof	0	0	0	0	0.0
Other Roof	0	0	0	0	0.0
Glass	3563	419	0	3981	31.9
Door	0	87	0	87	0.7
Wall	0	320	0	320	2.6
Below-Grade Wall	0	0	0	0	0.0
Other Wall	0	0	0	0	0.0
Partition	0	1429	0	1429	11.5
Exterior Floor	0	0	0	0	0.0
Interior Floor	0	0	0	0	0.0
Slab	0	568	0	568	4.6
Other Floor	0	0	0	0	0.0
Infiltration	0	0	0	0	0.0
Envelope Subtotal	3563	2822	0	6385	-
People	803	80	1270	2153	17.3
Lights	928	165	0	1093	8.8
RA Sensible (Lights)	1066	0	0	1066	8.5
Miscellaneous Loads	1057	68	0	1125	9.0
Internal Subtotal	3854	313	1270	5437	-
RA (All Other)	0	0	0	0	0.0
DOA Direct to Zone	0	0	0	0	0.0
Ceiling	0	521	0	521	4.2
Refrigeration	0	0	0	0	0.0
Service Water	0	0	0	0	0.0
HVAC Equipment Losses	0	0	0	0	0.0
Adj Air Transfer Heat	0	0	0	0	0.0
Sizing Factor Correction	0	0	0	0	0.0
Time Delay Correction	0	131	0	131	1.1
Grand Total	7417	3788	1270	12475	100.0

Engineering Checks

Cooling tons	1.04	Input Ventilation cfm	90
Cooling cfm	1,001.77	Calculated Ventilation cfm	215
ft²/ton	1164.66	Number of People	8.20
cfm/ton	963.46	People per 1000 ft²	7
Conditioned ft²	1210.6		

Conditions at Time of Heating Peak

Outside	DB / WB / HR	16.4 °F	/	12.6 °F	/	5.3 gr/lb
Zone	DB / RH / HR	70.0 °F	/	4.9 %	/	5.2 gr/lb

	Instant Sensible (Btu/h)	Time Delay Sensible (Btu/h)	Latent (Btu/h)	Total (Btu/h)	Percent of Total (%)
Roof	0	0	0	0	0.0
Other Roof	0	0	0	0	0.0
Glass	-5937	0	0	-5937	82.7
Door	0	10	0	10	-0.1
Wall	0	-313	0	-313	4.4
Below-Grade Wall	0	0	0	0	0.0
Other Wall	0	0	0	0	0.0
Partition	0	170	0	170	-2.4
Exterior Floor	0	0	0	0	0.0
Interior Floor	0	0	0	0	0.0
Slab	0	-7	0	-7	0.1
Other Floor	0	0	0	0	0.0
Infiltration	0	0	0	0	0.0
Envelope Subtotal	-5937	-140	0	-6077	-
People	0	0	0	0	0.0
Lights	0	0	0	0	0.0
RA Sensible (Lights)	0	0	0	0	0.0
Miscellaneous Loads	0	0	0	0	0.0
Internal Subtotal	0	0	0	0	-
RA (All Other)	0	0	0	0	0.0
DOA Direct to Zone	0	0	0	0	0.0
Ceiling	0	-458	0	-458	6.4
Refrigeration	0	0	0	0	0.0
Service Water	0	0	0	0	0.0
HVAC Equipment Losses	0	0	0	0	0.0
Adj Air Transfer Heat	0	0	0	0	0.0
Sizing Factor Correction	-648	0	0	-648	9.0
Time Delay Correction	0	0	0	0	0.0
Grand Total	-6585	-597	0	-7183	100.0

Engineering Checks

Heating Mbh	-7.18	Input Ventilation cfm	90
Heating cfm	300.53	Calculated Ventilation cfm	87
ft²/Mbh	-168.57	Number of People	8.20
cfm/Mbh	-41.84	People per 1000 ft²	7
Conditioned ft²	1210.6		

ZONE_VAV-1-30

Conditions at Time of Cooling Peak

Outside	DB / WB / HR	83.6 °F	/	71.9 °F	/	99.4 gr/lb
Zone	DB / RH / HR	75.0 °F	/	61.3 %	/	79.5 gr/lb

	Instant Sensible (Btu/h)	Time Delay Sensible (Btu/h)	Latent (Btu/h)	Total (Btu/h)	Percent of Total (%)
Roof	0	0	0	0	0.0
Other Roof	0	0	0	0	0.0
Glass	0	0	0	0	0.0
Door	0	11	0	11	0.2
Wall	0	0	0	0	0.0
Below-Grade Wall	0	0	0	0	0.0
Other Wall	0	0	0	0	0.0
Partition	0	186	0	186	3.1
Exterior Floor	0	0	0	0	0.0
Interior Floor	0	0	0	0	0.0
Slab	0	-125	0	-125	-2.1
Other Floor	0	0	0	0	0.0
Infiltration	0	0	0	0	0.0
Envelope Subtotal	0	72	0	72	-
People	1050	1435	2000	4484	74.1
Lights	259	431	0	690	11.4
RA Sensible (Lights)	297	0	0	297	4.9
Miscellaneous Loads	294	210	0	505	8.3
Internal Subtotal	1900	2076	2000	5975	-
RA (All Other)	0	0	0	0	0.0
DOA Direct to Zone	0	0	0	0	0.0
Ceiling	0	20	0	20	0.3
Refrigeration	0	0	0	0	0.0
Service Water	0	0	0	0	0.0
HVAC Equipment Losses	0	0	0	0	0.0
Adj Air Transfer Heat	0	0	0	0	0.0
Sizing Factor Correction	0	0	0	0	0.0
Time Delay Correction	0	-16	0	-16	-0.3
Grand Total	1900	2151	2000	6051	100.0

Engineering Checks

Cooling tons	0.50	Input Ventilation cfm	64
Cooling cfm	707.72	Calculated Ventilation cfm	152
ft²/ton	452.62	Number of People	10.00
cfm/ton	1,403.33	People per 1000 ft²	44
Conditioned ft²	228.2		

Conditions at Time of Heating Peak

Outside	DB / WB / HR	16.4 °F	/	12.6 °F	/	5.3 gr/lb
Zone	DB / RH / HR	70.0 °F	/	4.9 %	/	5.2 gr/lb

	Instant Sensible (Btu/h)	Time Delay Sensible (Btu/h)	Latent (Btu/h)	Total (Btu/h)	Percent of Total (%)
Roof	0	0	0	0	0.0
Other Roof	0	0	0	0	0.0
Glass	0	0	0	0	0.0
Door	0	-6	0	-6	4.8
Wall	0	0	0	0	0.0
Below-Grade Wall	0	0	0	0	0.0
Other Wall	0	0	0	0	0.0
Partition	0	-36	0	-36	28.4
Exterior Floor	0	0	0	0	0.0
Interior Floor	0	0	0	0	0.0
Slab	0	1	0	1	-1.2
Other Floor	0	0	0	0	0.0
Infiltration	0	0	0	0	0.0
Envelope Subtotal	0	-41	0	-41	-
People	0	0	0	0	0.0
Lights	0	0	0	0	0.0
RA Sensible (Lights)	0	0	0	0	0.0
Miscellaneous Loads	0	0	0	0	0.0
Internal Subtotal	0	0	0	0	-
RA (All Other)	0	0	0	0	0.0
DOA Direct to Zone	0	0	0	0	0.0
Ceiling	0	-87	0	-87	68.0
Refrigeration	0	0	0	0	0.0
Service Water	0	0	0	0	0.0
HVAC Equipment Losses	0	0	0	0	0.0
Adj Air Transfer Heat	0	0	0	0	0.0
Sizing Factor Correction	0	0	0	0	0.0
Time Delay Correction	0	0	0	0	0.0
Grand Total	0	-127	0	-127	100.0

Engineering Checks

Heating Mbh	-0.13	Input Ventilation cfm	64
Heating cfm	212.31	Calculated Ventilation cfm	61
ft²/Mbh	-1791.54	Number of People	10.00
cfm/Mbh	-1,666.69	People per 1000 ft²	44
Conditioned ft²	228.2		

ZONE_VAV-1-31

Conditions at Time of Cooling Peak

Outside	DB / WB / HR	80.4 °F	/	70.9 °F	/	99.4 gr/lb
Zone	DB / RH / HR	75.0 °F	/	49.4 %	/	63.8 gr/lb

	Instant Sensible (Btu/h)	Time Delay Sensible (Btu/h)	Latent (Btu/h)	Total (Btu/h)	Percent of Total (%)
Roof	0	0	0	0	0.0
Other Roof	0	0	0	0	0.0
Glass	640	1108	0	1749	68.2
Door	0	-14	0	-14	-0.5
Wall	0	171	0	171	6.7
Below-Grade Wall	0	0	0	0	0.0
Other Wall	0	0	0	0	0.0
Partition	0	282	0	282	11.0
Exterior Floor	0	0	0	0	0.0
Interior Floor	0	0	0	0	0.0
Slab	0	-283	0	-283	-11.0
Other Floor	0	0	0	0	0.0
Infiltration	0	0	0	0	0.0
Envelope Subtotal	640	1264	0	1904	-
People	40	42	76	158	6.2
Lights	86	131	0	217	8.5
RA Sensible (Lights)	99	0	0	99	3.9
Miscellaneous Loads	98	65	0	163	6.4
Internal Subtotal	323	238	76	637	-
RA (All Other)	0	0	0	0	0.0
DOA Direct to Zone	0	0	0	0	0.0
Ceiling	0	31	0	31	1.2
Refrigeration	0	0	0	0	0.0
Service Water	0	0	0	0	0.0
HVAC Equipment Losses	0	0	0	0	0.0
Adj Air Transfer Heat	0	0	0	0	0.0
Sizing Factor Correction	0	0	0	0	0.0
Time Delay Correction	0	-8	0	-8	-0.3
Grand Total	963	1525	76	2564	100.0

Engineering Checks

Cooling tons	0.21	Input Ventilation cfm	6
Cooling cfm	124.85	Calculated Ventilation cfm	19
ft²/ton	355.66	Number of People	0.38
cfm/ton	584.13	People per 1000 ft²	5
Conditioned ft²	76.0		

Conditions at Time of Heating Peak

Outside	DB / WB / HR	16.4 °F	/	12.6 °F	/	5.3 gr/lb
Zone	DB / RH / HR	70.0 °F	/	4.9 %	/	5.2 gr/lb

	Instant Sensible (Btu/h)	Time Delay Sensible (Btu/h)	Latent (Btu/h)	Total (Btu/h)	Percent of Total (%)
Roof	0	0	0	0	0.0
Other Roof	0	0	0	0	0.0
Glass	-696	0	0	-696	69.0
Door	0	3	0	3	-0.3
Wall	0	-146	0	-146	14.5
Below-Grade Wall	0	0	0	0	0.0
Other Wall	0	0	0	0	0.0
Partition	0	-81	0	-81	8.0
Exterior Floor	0	0	0	0	0.0
Interior Floor	0	0	0	0	0.0
Slab	0	-1	0	-1	0.1
Other Floor	0	0	0	0	0.0
Infiltration	0	0	0	0	0.0
Envelope Subtotal	-696	-224	0	-920	-
People	0	0	0	0	0.0
Lights	0	0	0	0	0.0
RA Sensible (Lights)	0	0	0	0	0.0
Miscellaneous Loads	0	0	0	0	0.0
Internal Subtotal	0	0	0	0	-
RA (All Other)	0	0	0	0	0.0
DOA Direct to Zone	0	0	0	0	0.0
Ceiling	0	-88	0	-88	8.7
Refrigeration	0	0	0	0	0.0
Service Water	0	0	0	0	0.0
HVAC Equipment Losses	0	0	0	0	0.0
Adj Air Transfer Heat	0	0	0	0	0.0
Sizing Factor Correction	0	0	0	0	0.0
Time Delay Correction	0	0	0	0	0.0
Grand Total	-696	-312	0	-1008	100.0

Engineering Checks

Heating Mbh	-1.01	Input Ventilation cfm	6
Heating cfm	37.46	Calculated Ventilation cfm	11
ft²/Mbh	-75.39	Number of People	0.38
cfm/Mbh	-37.16	People per 1000 ft²	5
Conditioned ft²	76.0		

ZONE_VAV-1-32

Conditions at Time of Cooling Peak

Outside	DB / WB / HR	90.7 °F	/	73.9 °F	/	99.5 gr/lb
Zone	DB / RH / HR	75.0 °F	/	57.8 %	/	74.9 gr/lb

	Instant Sensible (Btu/h)	Time Delay Sensible (Btu/h)	Latent (Btu/h)	Total (Btu/h)	Percent of Total (%)
Roof	0	0	0	0	0.0
Other Roof	0	0	0	0	0.0
Glass	2116	1643	0	3760	31.5
Door	0	0	0	0	0.0
Wall	0	10	0	10	0.1
Below-Grade Wall	0	0	0	0	0.0
Other Wall	0	0	0	0	0.0
Partition	0	-686	0	-686	-5.8
Exterior Floor	0	0	0	0	0.0
Interior Floor	0	0	0	0	0.0
Slab	0	-1182	0	-1182	-9.9
Other Floor	0	0	0	0	0.0
Infiltration	0	0	0	0	0.0
Envelope Subtotal	2116	-215	0	1901	-
People	1569	2805	2989	7364	61.7
Lights	640	1222	0	1862	15.6
RA Sensible (Lights)	734	0	0	734	6.2
Miscellaneous Loads	856	848	0	1704	14.3
Internal Subtotal	3800	4875	2989	11664	-
RA (All Other)	0	0	0	0	0.0
DOA Direct to Zone	0	0	0	0	0.0
Ceiling	0	-558	0	-558	-4.7
Refrigeration	0	0	0	0	0.0
Service Water	0	0	0	0	0.0
HVAC Equipment Losses	0	0	0	0	0.0
Adj Air Transfer Heat	0	0	0	0	0.0
Sizing Factor Correction	447	0	0	447	3.7
Time Delay Correction	0	-1517	0	-1517	-12.7
Grand Total	6363	2585	2989	11937	100.0

Engineering Checks

Cooling tons	0.99	Input Ventilation cfm	110
Cooling cfm	1,223.96	Calculated Ventilation cfm	262
ft²/ton	593.23	Number of People	14.94
cfm/ton	1,230.15	People per 1000 ft²	25
Conditioned ft²	590.1		

Conditions at Time of Heating Peak

Outside	DB / WB / HR	16.4 °F	/	12.6 °F	/	5.3 gr/lb
Zone	DB / RH / HR	70.0 °F	/	4.9 %	/	5.2 gr/lb

	Instant Sensible (Btu/h)	Time Delay Sensible (Btu/h)	Latent (Btu/h)	Total (Btu/h)	Percent of Total (%)
Roof	0	0	0	0	0.0
Other Roof	0	0	0	0	0.0
Glass	-3165	0	0	-3165	87.5
Door	0	0	0	0	0.0
Wall	0	-273	0	-273	7.5
Below-Grade Wall	0	0	0	0	0.0
Other Wall	0	0	0	0	0.0
Partition	0	98	0	98	-2.7
Exterior Floor	0	0	0	0	0.0
Interior Floor	0	0	0	0	0.0
Slab	0	-5	0	-5	0.1
Other Floor	0	0	0	0	0.0
Infiltration	0	0	0	0	0.0
Envelope Subtotal	-3165	-179	0	-3345	-
People	0	0	0	0	0.0
Lights	0	0	0	0	0.0
RA Sensible (Lights)	0	0	0	0	0.0
Miscellaneous Loads	0	0	0	0	0.0
Internal Subtotal	0	0	0	0	-
RA (All Other)	0	0	0	0	0.0
DOA Direct to Zone	0	0	0	0	0.0
Ceiling	0	-274	0	-274	7.6
Refrigeration	0	0	0	0	0.0
Service Water	0	0	0	0	0.0
HVAC Equipment Losses	0	0	0	0	0.0
Adj Air Transfer Heat	0	0	0	0	0.0
Sizing Factor Correction	0	0	0	0	0.0
Time Delay Correction	0	0	0	0	0.0
Grand Total	-3165	-453	0	-3618	100.0

Engineering Checks

Heating Mbh	-3.62	Input Ventilation cfm	110
Heating cfm	367.19	Calculated Ventilation cfm	106
ft²/Mbh	-163.10	Number of People	14.94
cfm/Mbh	-101.48	People per 1000 ft²	25
Conditioned ft²	590.1		

ZONE_VAV-1-33

Conditions at Time of Cooling Peak

Outside	DB / WB / HR	90.7 °F	/	73.9 °F	/	99.5 gr/lb
Zone	DB / RH / HR	75.0 °F	/	50.5 %	/	65.2 gr/lb

	Instant Sensible (Btu/h)	Time Delay Sensible (Btu/h)	Latent (Btu/h)	Total (Btu/h)	Percent of Total (%)
Roof	0	0	0	0	0.0
Other Roof	0	0	0	0	0.0
Glass	2440	1315	0	3754	52.0
Door	0	0	0	0	0.0
Wall	0	106	0	106	1.5
Below-Grade Wall	0	0	0	0	0.0
Other Wall	0	0	0	0	0.0
Partition	0	-111	0	-111	-1.5
Exterior Floor	0	0	0	0	0.0
Interior Floor	0	0	0	0	0.0
Slab	0	-471	0	-471	-6.5
Other Floor	0	0	0	0	0.0
Infiltration	0	0	0	0	0.0
Envelope Subtotal	2440	839	0	3279	-
People	248	279	473	1000	13.8
Lights	505	619	0	1124	15.6
RA Sensible (Lights)	580	0	0	580	8.0
Miscellaneous Loads	968	614	0	1582	21.9
Internal Subtotal	2301	1511	473	4285	-
RA (All Other)	0	0	0	0	0.0
DOA Direct to Zone	0	0	0	0	0.0
Ceiling	0	79	0	79	1.1
Refrigeration	0	0	0	0	0.0
Service Water	0	0	0	0	0.0
HVAC Equipment Losses	0	0	0	0	0.0
Adj Air Transfer Heat	0	0	0	0	0.0
Sizing Factor Correction	0	0	0	0	0.0
Time Delay Correction	0	-421	0	-421	-5.8
Grand Total	4741	2008	473	7222	100.0

Engineering Checks

Cooling tons	0.60	Input Ventilation cfm	48
Cooling cfm	532.16	Calculated Ventilation cfm	114
ft²/ton	999.04	Number of People	2.37
cfm/ton	884.12	People per 1000 ft²	4
Conditioned ft²	601.2		

Conditions at Time of Heating Peak

Outside	DB / WB / HR	16.4 °F	/	12.6 °F	/	5.3 gr/lb
Zone	DB / RH / HR	70.0 °F	/	4.9 %	/	5.2 gr/lb

	Instant Sensible (Btu/h)	Time Delay Sensible (Btu/h)	Latent (Btu/h)	Total (Btu/h)	Percent of Total (%)
Roof	0	0	0	0	0.0
Other Roof	0	0	0	0	0.0
Glass	-3601	0	0	-3601	88.1
Door	0	0	0	0	0.0
Wall	0	-285	0	-285	7.0
Below-Grade Wall	0	0	0	0	0.0
Other Wall	0	0	0	0	0.0
Partition	0	156	0	156	-3.8
Exterior Floor	0	0	0	0	0.0
Interior Floor	0	0	0	0	0.0
Slab	0	-5	0	-5	0.1
Other Floor	0	0	0	0	0.0
Infiltration	0	0	0	0	0.0
Envelope Subtotal	-3601	-135	0	-3736	-
People	0	0	0	0	0.0
Lights	0	0	0	0	0.0
RA Sensible (Lights)	0	0	0	0	0.0
Miscellaneous Loads	0	0	0	0	0.0
Internal Subtotal	0	0	0	0	-
RA (All Other)	0	0	0	0	0.0
DOA Direct to Zone	0	0	0	0	0.0
Ceiling	0	-351	0	-351	8.6
Refrigeration	0	0	0	0	0.0
Service Water	0	0	0	0	0.0
HVAC Equipment Losses	0	0	0	0	0.0
Adj Air Transfer Heat	0	0	0	0	0.0
Sizing Factor Correction	0	0	0	0	0.0
Time Delay Correction	0	0	0	0	0.0
Grand Total	-3601	-485	0	-4087	100.0

Engineering Checks

Heating Mbh	-4.09	Input Ventilation cfm	48
Heating cfm	159.65	Calculated Ventilation cfm	46
ft²/Mbh	-147.12	Number of People	2.37
cfm/Mbh	-39.07	People per 1000 ft²	4
Conditioned ft²	601.2		

ZONE_VAV-1-34

Conditions at Time of Cooling Peak

Outside	DB / WB / HR	83.2 °F	/	71.0 °F	/	95.0 gr/lb
Zone	DB / RH / HR	75.0 °F	/	52.8 %	/	68.3 gr/lb

	Instant Sensible (Btu/h)	Time Delay Sensible (Btu/h)	Latent (Btu/h)	Total (Btu/h)	Percent of Total (%)
Roof	0	0	0	0	0.0
Other Roof	0	0	0	0	0.0
Glass	2526	860	0	3386	18.6
Door	0	0	0	0	0.0
Wall	0	114	0	114	0.6
Below-Grade Wall	0	0	0	0	0.0
Other Wall	0	0	0	0	0.0
Partition	0	-132	0	-132	-0.7
Exterior Floor	0	0	0	0	0.0
Interior Floor	0	0	0	0	0.0
Slab	0	-82	0	-82	-0.5
Other Floor	0	0	0	0	0.0
Infiltration	0	0	0	0	0.0
Envelope Subtotal	2526	759	0	3286	-
People	1360	1263	2590	5213	28.7
Lights	604	540	0	1144	6.3
RA Sensible (Lights)	693	0	0	693	3.8
Miscellaneous Loads	6283	3035	0	9317	51.2
Internal Subtotal	8939	4838	2590	16367	-
RA (All Other)	0	0	0	0	0.0
DOA Direct to Zone	0	0	0	0	0.0
Ceiling	0	417	0	417	2.3
Refrigeration	0	0	0	0	0.0
Service Water	0	0	0	0	0.0
HVAC Equipment Losses	0	0	0	0	0.0
Adj Air Transfer Heat	0	0	0	0	0.0
Sizing Factor Correction	0	0	0	0	0.0
Time Delay Correction	0	-1877	0	-1877	-10.3
Grand Total	11466	4137	2590	18192	100.0

Engineering Checks

Cooling tons	1.52	Input Ventilation cfm	105
Cooling cfm	1,165.40	Calculated Ventilation cfm	250
ft²/ton	441.17	Number of People	12.94
cfm/ton	768.57	People per 1000 ft²	19
Conditioned ft²	668.8		

Conditions at Time of Heating Peak

Outside	DB / WB / HR	16.4 °F	/	12.6 °F	/	5.3 gr/lb
Zone	DB / RH / HR	70.0 °F	/	4.9 %	/	5.2 gr/lb

	Instant Sensible (Btu/h)	Time Delay Sensible (Btu/h)	Latent (Btu/h)	Total (Btu/h)	Percent of Total (%)
Roof	0	0	0	0	0.0
Other Roof	0	0	0	0	0.0
Glass	-3155	0	0	-3155	86.6
Door	0	0	0	0	0.0
Wall	0	-269	0	-269	7.4
Below-Grade Wall	0	0	0	0	0.0
Other Wall	0	0	0	0	0.0
Partition	0	100	0	100	-2.7
Exterior Floor	0	0	0	0	0.0
Interior Floor	0	0	0	0	0.0
Slab	0	-5	0	-5	0.1
Other Floor	0	0	0	0	0.0
Infiltration	0	0	0	0	0.0
Envelope Subtotal	-3155	-174	0	-3329	-
People	0	0	0	0	0.0
Lights	0	0	0	0	0.0
RA Sensible (Lights)	0	0	0	0	0.0
Miscellaneous Loads	0	0	0	0	0.0
Internal Subtotal	0	0	0	0	-
RA (All Other)	0	0	0	0	0.0
DOA Direct to Zone	0	0	0	0	0.0
Ceiling	0	-313	0	-313	8.6
Refrigeration	0	0	0	0	0.0
Service Water	0	0	0	0	0.0
HVAC Equipment Losses	0	0	0	0	0.0
Adj Air Transfer Heat	0	0	0	0	0.0
Sizing Factor Correction	0	0	0	0	0.0
Time Delay Correction	0	0	0	0	0.0
Grand Total	-3155	-486	0	-3642	100.0

Engineering Checks

Heating Mbh	-3.64	Input Ventilation cfm	105
Heating cfm	349.62	Calculated Ventilation cfm	101
ft²/Mbh	-183.66	Number of People	12.94
cfm/Mbh	-96.01	People per 1000 ft²	19
Conditioned ft²	668.8		

ZONE_VAV-1-35

Conditions at Time of Cooling Peak

Outside	DB / WB / HR	86.4 °F	/	72.7 °F	/	99.5 gr/lb
Zone	DB / RH / HR	81.0 °F	/	39.9 %	/	62.8 gr/lb

	Instant Sensible (Btu/h)	Time Delay Sensible (Btu/h)	Latent (Btu/h)	Total (Btu/h)	Percent of Total (%)
Roof	0	0	0	0	0.0
Other Roof	0	0	0	0	0.0
Glass	208	623	0	830	46.8
Door	0	78	0	78	4.4
Wall	0	0	0	0	0.0
Below-Grade Wall	0	0	0	0	0.0
Other Wall	0	0	0	0	0.0
Partition	0	639	0	639	36.0
Exterior Floor	0	0	0	0	0.0
Interior Floor	0	0	0	0	0.0
Slab	0	-339	0	-339	-19.1
Other Floor	0	0	0	0	0.0
Infiltration	0	0	0	0	0.0
Envelope Subtotal	208	1000	0	1208	-
People	0	0	0	0	0.0
Lights	149	250	0	399	22.5
RA Sensible (Lights)	171	0	0	171	9.6
Miscellaneous Loads	0	0	0	0	0.0
Internal Subtotal	319	250	0	569	-
RA (All Other)	0	0	0	0	0.0
DOA Direct to Zone	0	0	0	0	0.0
Ceiling	0	14	0	14	0.8
Refrigeration	0	0	0	0	0.0
Service Water	0	0	0	0	0.0
HVAC Equipment Losses	0	0	0	0	0.0
Adj Air Transfer Heat	0	0	0	0	0.0
Sizing Factor Correction	0	0	0	0	0.0
Time Delay Correction	0	-16	0	-16	-0.9
Grand Total	527	1248	0	1775	100.0

Engineering Checks

Cooling tons	0.15	Input Ventilation cfm	15
Cooling cfm	163.02	Calculated Ventilation cfm	35
ft²/ton	1653.54	Number of People	0.00
cfm/ton	1,101.95	People per 1000 ft²	0
Conditioned ft²	244.6		

Conditions at Time of Heating Peak

Outside	DB / WB / HR	16.4 °F	/	12.6 °F	/	5.3 gr/lb
Zone	DB / RH / HR	70.0 °F	/	4.9 %	/	5.2 gr/lb

	Instant Sensible (Btu/h)	Time Delay Sensible (Btu/h)	Latent (Btu/h)	Total (Btu/h)	Percent of Total (%)
Roof	0	0	0	0	0.0
Other Roof	0	0	0	0	0.0
Glass	-467	0	0	-467	65.9
Door	0	28	0	28	-4.0
Wall	0	0	0	0	0.0
Below-Grade Wall	0	0	0	0	0.0
Other Wall	0	0	0	0	0.0
Partition	0	-64	0	-64	9.1
Exterior Floor	0	0	0	0	0.0
Interior Floor	0	0	0	0	0.0
Slab	0	-2	0	-2	0.3
Other Floor	0	0	0	0	0.0
Infiltration	0	0	0	0	0.0
Envelope Subtotal	-467	-38	0	-504	-
People	0	0	0	0	0.0
Lights	0	0	0	0	0.0
RA Sensible (Lights)	0	0	0	0	0.0
Miscellaneous Loads	0	0	0	0	0.0
Internal Subtotal	0	0	0	0	-
RA (All Other)	0	0	0	0	0.0
DOA Direct to Zone	0	0	0	0	0.0
Ceiling	0	-203	0	-203	28.7
Refrigeration	0	0	0	0	0.0
Service Water	0	0	0	0	0.0
HVAC Equipment Losses	0	0	0	0	0.0
Adj Air Transfer Heat	0	0	0	0	0.0
Sizing Factor Correction	0	0	0	0	0.0
Time Delay Correction	0	0	0	0	0.0
Grand Total	-467	-241	0	-708	100.0

Engineering Checks

Heating Mbh	-0.71	Input Ventilation cfm	15
Heating cfm	48.91	Calculated Ventilation cfm	14
ft²/Mbh	-345.63	Number of People	0.00
cfm/Mbh	-69.12	People per 1000 ft²	0
Conditioned ft²	244.6		

ZONE_VAV-1-36

Conditions at Time of Cooling Peak

Outside	DB / WB / HR	82.2 °F	/	71.0 °F	/	96.5 gr/lb
Zone	DB / RH / HR	75.0 °F	/	49.6 %	/	64.1 gr/lb

	Instant Sensible (Btu/h)	Time Delay Sensible (Btu/h)	Latent (Btu/h)	Total (Btu/h)	Percent of Total (%)
Roof	0	0	0	0	0.0
Other Roof	0	0	0	0	0.0
Glass	73	751	0	824	46.3
Door	0	0	0	0	0.0
Wall	0	237	0	237	13.3
Below-Grade Wall	0	0	0	0	0.0
Other Wall	0	0	0	0	0.0
Partition	0	259	0	259	14.5
Exterior Floor	0	0	0	0	0.0
Interior Floor	0	0	0	0	0.0
Slab	0	-164	0	-164	-9.2
Other Floor	0	0	0	0	0.0
Infiltration	0	0	0	0	0.0
Envelope Subtotal	73	1083	0	1156	-
People	36	44	68	148	8.3
Lights	62	94	0	156	8.7
RA Sensible (Lights)	71	0	0	71	4.0
Miscellaneous Loads	140	100	0	239	13.5
Internal Subtotal	308	238	68	614	-
RA (All Other)	0	0	0	0	0.0
DOA Direct to Zone	0	0	0	0	0.0
Ceiling	0	38	0	38	2.1
Refrigeration	0	0	0	0	0.0
Service Water	0	0	0	0	0.0
HVAC Equipment Losses	0	0	0	0	0.0
Adj Air Transfer Heat	0	0	0	0	0.0
Sizing Factor Correction	0	0	0	0	0.0
Time Delay Correction	0	-29	0	-29	-1.6
Grand Total	381	1329	68	1778	100.0

Engineering Checks

Cooling tons	0.15	Input Ventilation cfm	6
Cooling cfm	75.02	Calculated Ventilation cfm	11
ft²/ton	460.50	Number of People	0.34
cfm/ton	506.08	People per 1000 ft²	5
Conditioned ft²	68.2		

Conditions at Time of Heating Peak

Outside	DB / WB / HR	16.4 °F	/	12.6 °F	/	5.3 gr/lb
Zone	DB / RH / HR	70.0 °F	/	4.9 %	/	5.2 gr/lb

	Instant Sensible (Btu/h)	Time Delay Sensible (Btu/h)	Latent (Btu/h)	Total (Btu/h)	Percent of Total (%)
Roof	0	0	0	0	0.0
Other Roof	0	0	0	0	0.0
Glass	-34	0	0	-34	6.7
Door	0	0	0	0	0.0
Wall	0	-224	0	-224	45.0
Below-Grade Wall	0	0	0	0	0.0
Other Wall	0	0	0	0	0.0
Partition	0	-140	0	-140	28.2
Exterior Floor	0	0	0	0	0.0
Interior Floor	0	0	0	0	0.0
Slab	0	-1	0	-1	0.2
Other Floor	0	0	0	0	0.0
Infiltration	0	0	0	0	0.0
Envelope Subtotal	-34	-365	0	-398	-
People	0	0	0	0	0.0
Lights	0	0	0	0	0.0
RA Sensible (Lights)	0	0	0	0	0.0
Miscellaneous Loads	0	0	0	0	0.0
Internal Subtotal	0	0	0	0	-
RA (All Other)	0	0	0	0	0.0
DOA Direct to Zone	0	0	0	0	0.0
Ceiling	0	-99	0	-99	19.9
Refrigeration	0	0	0	0	0.0
Service Water	0	0	0	0	0.0
HVAC Equipment Losses	0	0	0	0	0.0
Adj Air Transfer Heat	0	0	0	0	0.0
Sizing Factor Correction	0	0	0	0	0.0
Time Delay Correction	0	0	0	0	0.0
Grand Total	-34	-464	0	-497	100.0

Engineering Checks

Heating Mbh	-0.50	Input Ventilation cfm	6
Heating cfm	22.50	Calculated Ventilation cfm	6
ft²/Mbh	-137.24	Number of People	0.34
cfm/Mbh	-45.25	People per 1000 ft²	5
Conditioned ft²	68.2		

ZONE_VAV-1-37

Conditions at Time of Cooling Peak

Outside	DB / WB / HR	83.8 °F	/	71.9 °F	/	99.4 gr/lb
Zone	DB / RH / HR	75.0 °F	/	50.5 %	/	65.3 gr/lb

	Instant Sensible (Btu/h)	Time Delay Sensible (Btu/h)	Latent (Btu/h)	Total (Btu/h)	Percent of Total (%)
Roof	0	0	0	0	0.0
Other Roof	0	0	0	0	0.0
Glass	0	0	0	0	0.0
Door	0	16	0	16	0.8
Wall	0	504	0	504	23.7
Below-Grade Wall	0	0	0	0	0.0
Other Wall	0	0	0	0	0.0
Partition	0	361	0	361	17.0
Exterior Floor	0	0	0	0	0.0
Interior Floor	0	0	0	0	0.0
Slab	0	-146	0	-146	-6.9
Other Floor	0	0	0	0	0.0
Infiltration	0	0	0	0	0.0
Envelope Subtotal	0	735	0	735	-
People	74	76	140	290	13.6
Lights	144	203	0	347	16.3
RA Sensible (Lights)	165	0	0	165	7.8
Miscellaneous Loads	288	174	0	462	21.7
Internal Subtotal	670	453	140	1263	-
RA (All Other)	0	0	0	0	0.0
DOA Direct to Zone	0	0	0	0	0.0
Ceiling	0	130	0	130	6.1
Refrigeration	0	0	0	0	0.0
Service Water	0	0	0	0	0.0
HVAC Equipment Losses	0	0	0	0	0.0
Adj Air Transfer Heat	0	0	0	0	0.0
Sizing Factor Correction	0	0	0	0	0.0
Time Delay Correction	0	-1	0	-1	-0.1
Grand Total	670	1317	140	2127	100.0

Engineering Checks

Cooling tons	0.18	Input Ventilation cfm	12
Cooling cfm	132.69	Calculated Ventilation cfm	20
ft²/ton	792.51	Number of People	0.70
cfm/ton	748.43	People per 1000 ft²	5
Conditioned ft²	140.5		

Conditions at Time of Heating Peak

Outside	DB / WB / HR	16.4 °F	/	12.6 °F	/	5.3 gr/lb
Zone	DB / RH / HR	70.0 °F	/	4.9 %	/	5.2 gr/lb

	Instant Sensible (Btu/h)	Time Delay Sensible (Btu/h)	Latent (Btu/h)	Total (Btu/h)	Percent of Total (%)
Roof	0	0	0	0	0.0
Other Roof	0	0	0	0	0.0
Glass	0	0	0	0	0.0
Door	0	-4	0	-4	0.5
Wall	0	-442	0	-442	59.4
Below-Grade Wall	0	0	0	0	0.0
Other Wall	0	0	0	0	0.0
Partition	0	-106	0	-106	14.2
Exterior Floor	0	0	0	0	0.0
Interior Floor	0	0	0	0	0.0
Slab	0	-2	0	-2	0.2
Other Floor	0	0	0	0	0.0
Infiltration	0	0	0	0	0.0
Envelope Subtotal	0	-554	0	-554	-
People	0	0	0	0	0.0
Lights	0	0	0	0	0.0
RA Sensible (Lights)	0	0	0	0	0.0
Miscellaneous Loads	0	0	0	0	0.0
Internal Subtotal	0	0	0	0	-
RA (All Other)	0	0	0	0	0.0
DOA Direct to Zone	0	0	0	0	0.0
Ceiling	0	-191	0	-191	25.6
Refrigeration	0	0	0	0	0.0
Service Water	0	0	0	0	0.0
HVAC Equipment Losses	0	0	0	0	0.0
Adj Air Transfer Heat	0	0	0	0	0.0
Sizing Factor Correction	0	0	0	0	0.0
Time Delay Correction	0	0	0	0	0.0
Grand Total	0	-744	0	-744	100.0

Engineering Checks

Heating Mbh	-0.74	Input Ventilation cfm	12
Heating cfm	39.81	Calculated Ventilation cfm	11
ft²/Mbh	-188.71	Number of People	0.70
cfm/Mbh	-53.47	People per 1000 ft²	5
Conditioned ft²	140.5		

ZONE_VAV-1-38

Conditions at Time of Cooling Peak

Outside	DB / WB / HR	82.8 °F	/	71.6 °F	/	99.4 gr/lb
Zone	DB / RH / HR	75.0 °F	/	53.2 %	/	68.8 gr/lb

	Instant Sensible (Btu/h)	Time Delay Sensible (Btu/h)	Latent (Btu/h)	Total (Btu/h)	Percent of Total (%)
Roof	0	0	0	0	0.0
Other Roof	0	0	0	0	0.0
Glass	3440	3655	0	7095	32.7
Door	0	0	0	0	0.0
Wall	0	481	0	481	2.2
Below-Grade Wall	0	0	0	0	0.0
Other Wall	0	0	0	0	0.0
Partition	0	-301	0	-301	-1.4
Exterior Floor	0	0	0	0	0.0
Interior Floor	0	0	0	0	0.0
Slab	0	-826	0	-826	-3.8
Other Floor	0	0	0	0	0.0
Infiltration	0	0	0	0	0.0
Envelope Subtotal	3440	3009	0	6449	-
People	1419	1327	3363	6110	28.2
Lights	515	572	0	1087	5.0
RA Sensible (Lights)	591	0	0	591	2.7
Miscellaneous Loads	6081	3450	0	9532	43.9
Internal Subtotal	8607	5350	3363	17320	-
RA (All Other)	0	0	0	0	0.0
DOA Direct to Zone	0	0	0	0	0.0
Ceiling	0	-405	0	-405	-1.9
Refrigeration	0	0	0	0	0.0
Service Water	0	0	0	0	0.0
HVAC Equipment Losses	0	0	0	0	0.0
Adj Air Transfer Heat	0	0	0	0	0.0
Sizing Factor Correction	0	0	0	0	0.0
Time Delay Correction	0	-1670	0	-1670	-7.7
Grand Total	12047	6284	3363	21694	100.0

Engineering Checks

Cooling tons	1.81	Input Ventilation cfm	96
Cooling cfm	1,064.70	Calculated Ventilation cfm	228
ft²/ton	315.54	Number of People	12.32
cfm/ton	588.84	People per 1000 ft²	22
Conditioned ft²	570.4		

Conditions at Time of Heating Peak

Outside	DB / WB / HR	16.4 °F	/	12.6 °F	/	5.3 gr/lb
Zone	DB / RH / HR	70.0 °F	/	4.9 %	/	5.2 gr/lb

	Instant Sensible (Btu/h)	Time Delay Sensible (Btu/h)	Latent (Btu/h)	Total (Btu/h)	Percent of Total (%)
Roof	0	0	0	0	0.0
Other Roof	0	0	0	0	0.0
Glass	-5231	0	0	-5231	84.1
Door	0	0	0	0	0.0
Wall	0	-666	0	-666	10.7
Below-Grade Wall	0	0	0	0	0.0
Other Wall	0	0	0	0	0.0
Partition	0	156	0	156	-2.5
Exterior Floor	0	0	0	0	0.0
Interior Floor	0	0	0	0	0.0
Slab	0	-4	0	-4	0.1
Other Floor	0	0	0	0	0.0
Infiltration	0	0	0	0	0.0
Envelope Subtotal	-5231	-515	0	-5746	-
People	0	0	0	0	0.0
Lights	0	0	0	0	0.0
RA Sensible (Lights)	0	0	0	0	0.0
Miscellaneous Loads	0	0	0	0	0.0
Internal Subtotal	0	0	0	0	-
RA (All Other)	0	0	0	0	0.0
DOA Direct to Zone	0	0	0	0	0.0
Ceiling	0	-475	0	-475	7.6
Refrigeration	0	0	0	0	0.0
Service Water	0	0	0	0	0.0
HVAC Equipment Losses	0	0	0	0	0.0
Adj Air Transfer Heat	0	0	0	0	0.0
Sizing Factor Correction	0	0	0	0	0.0
Time Delay Correction	0	0	0	0	0.0
Grand Total	-5231	-990	0	-6221	100.0

Engineering Checks

Heating Mbh	-6.22	Input Ventilation cfm	96
Heating cfm	319.41	Calculated Ventilation cfm	92
ft²/Mbh	-91.69	Number of People	12.32
cfm/Mbh	-51.34	People per 1000 ft²	22
Conditioned ft²	570.4		

ZONE_VAV-1-39

Conditions at Time of Cooling Peak

Outside	DB / WB / HR	66.9 °F	/	66.0 °F	/	94.9 gr/lb
Zone	DB / RH / HR	81.0 °F	/	40.5 %	/	63.8 gr/lb

	Instant Sensible (Btu/h)	Time Delay Sensible (Btu/h)	Latent (Btu/h)	Total (Btu/h)	Percent of Total (%)
Roof	0	0	0	0	0.0
Other Roof	0	0	0	0	0.0
Glass	-193	42	0	-150	-32.6
Door	0	-31	0	-31	-6.7
Wall	0	0	0	0	0.0
Below-Grade Wall	0	0	0	0	0.0
Other Wall	0	0	0	0	0.0
Partition	0	-139	0	-139	-30.3
Exterior Floor	0	0	0	0	0.0
Interior Floor	0	0	0	0	0.0
Slab	0	91	0	91	19.7
Other Floor	0	0	0	0	0.0
Infiltration	0	0	0	0	0.0
Envelope Subtotal	-193	-37	0	-230	-
People	0	0	0	0	0.0
Lights	196	97	0	292	63.5
RA Sensible (Lights)	225	0	0	225	48.9
Miscellaneous Loads	0	0	0	0	0.0
Internal Subtotal	421	97	0	517	-
RA (All Other)	0	0	0	0	0.0
DOA Direct to Zone	0	0	0	0	0.0
Ceiling	0	-64	0	-64	-13.9
Refrigeration	0	0	0	0	0.0
Service Water	0	0	0	0	0.0
HVAC Equipment Losses	0	0	0	0	0.0
Adj Air Transfer Heat	0	0	0	0	0.0
Sizing Factor Correction	0	0	0	0	0.0
Time Delay Correction	0	237	0	237	51.4
Grand Total	228	232	0	460	100.0

Engineering Checks

Cooling tons	0.04	Input Ventilation cfm	19
Cooling cfm	214.80	Calculated Ventilation cfm	33
ft²/ton	8397.74	Number of People	0.00
cfm/ton	5,597.48	People per 1000 ft²	0
Conditioned ft²	322.2		

Conditions at Time of Heating Peak

Outside	DB / WB / HR	32.0 °F	/	32.0 °F	/	0.0 gr/lb
Zone	DB / RH / HR	32.0 °F	/	0.0 %	/	0.0 gr/lb

	Instant Sensible (Btu/h)	Time Delay Sensible (Btu/h)	Latent (Btu/h)	Total (Btu/h)	Percent of Total (%)
Roof	0	0	0	0	0.0
Other Roof	0	0	0	0	0.0
Glass	0	0	0	0	0.0
Door	0	0	0	0	0.0
Wall	0	0	0	0	0.0
Below-Grade Wall	0	0	0	0	0.0
Other Wall	0	0	0	0	0.0
Partition	0	0	0	0	0.0
Exterior Floor	0	0	0	0	0.0
Interior Floor	0	0	0	0	0.0
Slab	0	0	0	0	0.0
Other Floor	0	0	0	0	0.0
Infiltration	0	0	0	0	0.0
Envelope Subtotal	0	0	0	0	-
People	0	0	0	0	0.0
Lights	0	0	0	0	0.0
RA Sensible (Lights)	0	0	0	0	0.0
Miscellaneous Loads	0	0	0	0	0.0
Internal Subtotal	0	0	0	0	-
RA (All Other)	0	0	0	0	0.0
DOA Direct to Zone	0	0	0	0	0.0
Ceiling	0	0	0	0	0.0
Refrigeration	0	0	0	0	0.0
Service Water	0	0	0	0	0.0
HVAC Equipment Losses	0	0	0	0	0.0
Adj Air Transfer Heat	0	0	0	0	0.0
Sizing Factor Correction	0	0	0	0	0.0
Time Delay Correction	0	0	0	0	0.0
Grand Total	0	0	0	0	100.0

Engineering Checks

Heating Mbh	0.00	Input Ventilation cfm	19
Heating cfm	64.44	Calculated Ventilation cfm	18
ft²/Mbh	0.00	Number of People	0.00
cfm/Mbh	0.00	People per 1000 ft²	0
Conditioned ft²	322.2		

ZONE_VAV-2-01

Conditions at Time of Cooling Peak

Outside	DB / WB / HR	83.7 °F	/	68.4 °F	/	80.3 gr/lb
Zone	DB / RH / HR	75.0 °F	/	50.8 %	/	65.7 gr/lb

	Instant Sensible (Btu/h)	Time Delay Sensible (Btu/h)	Latent (Btu/h)	Total (Btu/h)	Percent of Total (%)
Roof	0	0	0	0	0.0
Other Roof	0	0	0	0	0.0
Glass	7374	19923	0	27296	69.9
Door	0	-87	0	-87	-0.2
Wall	0	293	0	293	0.8
Below-Grade Wall	0	0	0	0	0.0
Other Wall	0	0	0	0	0.0
Partition	0	-331	0	-331	-0.8
Exterior Floor	0	0	0	0	0.0
Interior Floor	0	-8504	0	-8504	-21.8
Slab	0	0	0	0	0.0
Other Floor	0	0	0	0	0.0
Infiltration	0	0	0	0	0.0
Envelope Subtotal	7374	11294	0	18667	-
People	1354	2608	3183	7145	18.3
Lights	908	1805	0	2713	6.9
RA Sensible (Lights)	1042	0	0	1042	2.7
Miscellaneous Loads	6563	6527	0	13089	33.5
Internal Subtotal	9866	10940	3183	23989	-
RA (All Other)	0	0	0	0	0.0
DOA Direct to Zone	0	0	0	0	0.0
Ceiling	0	-694	0	-694	-1.8
Refrigeration	0	0	0	0	0.0
Service Water	0	0	0	0	0.0
HVAC Equipment Losses	0	0	0	0	0.0
Adj Air Transfer Heat	0	0	0	0	0.0
Sizing Factor Correction	0	0	0	0	0.0
Time Delay Correction	0	-2910	0	-2910	-7.5
Grand Total	17240	18630	3183	39053	100.0

Engineering Checks

Cooling tons	3.25	Input Ventilation cfm	119
Cooling cfm	1,594.16	Calculated Ventilation cfm	202
ft²/ton	308.98	Number of People	11.79
cfm/ton	489.75	People per 1000 ft²	12
Conditioned ft²	1005.5		

Conditions at Time of Heating Peak

Outside	DB / WB / HR	16.4 °F	/	12.6 °F	/	5.3 gr/lb
Zone	DB / RH / HR	70.0 °F	/	4.9 %	/	5.2 gr/lb

	Instant Sensible (Btu/h)	Time Delay Sensible (Btu/h)	Latent (Btu/h)	Total (Btu/h)	Percent of Total (%)
Roof	0	0	0	0	0.0
Other Roof	0	0	0	0	0.0
Glass	-7492	0	0	-7492	67.0
Door	0	21	0	21	-0.2
Wall	0	-818	0	-818	7.3
Below-Grade Wall	0	0	0	0	0.0
Other Wall	0	0	0	0	0.0
Partition	0	84	0	84	-0.8
Exterior Floor	0	0	0	0	0.0
Interior Floor	0	-89	0	-89	0.8
Slab	0	0	0	0	0.0
Other Floor	0	0	0	0	0.0
Infiltration	0	0	0	0	0.0
Envelope Subtotal	-7492	-801	0	-8294	-
People	0	0	0	0	0.0
Lights	0	0	0	0	0.0
RA Sensible (Lights)	0	0	0	0	0.0
Miscellaneous Loads	0	0	0	0	0.0
Internal Subtotal	0	0	0	0	-
RA (All Other)	0	0	0	0	0.0
DOA Direct to Zone	0	0	0	0	0.0
Ceiling	0	-2889	0	-2889	25.8
Refrigeration	0	0	0	0	0.0
Service Water	0	0	0	0	0.0
HVAC Equipment Losses	0	0	0	0	0.0
Adj Air Transfer Heat	0	0	0	0	0.0
Sizing Factor Correction	0	0	0	0	0.0
Time Delay Correction	0	0	0	0	0.0
Grand Total	-7492	-3690	0	-11183	100.0

Engineering Checks

Heating Mbh	-11.18	Input Ventilation cfm	119
Heating cfm	478.25	Calculated Ventilation cfm	136
ft²/Mbh	-89.92	Number of People	11.79
cfm/Mbh	-42.77	People per 1000 ft²	12
Conditioned ft²	1005.5		

ZONE_VAV-2-02

Conditions at Time of Cooling Peak

Outside	DB / WB / HR	74.0 °F	/	62.2 °F	/	65.2 gr/lb
Zone	DB / RH / HR	75.0 °F	/	51.8 %	/	67.0 gr/lb

	Instant Sensible (Btu/h)	Time Delay Sensible (Btu/h)	Latent (Btu/h)	Total (Btu/h)	Percent of Total (%)
Roof	0	0	0	0	0.0
Other Roof	0	0	0	0	0.0
Glass	4932	15266	0	20198	68.7
Door	0	-188	0	-188	-0.6
Wall	0	36	0	36	0.1
Below-Grade Wall	0	0	0	0	0.0
Other Wall	0	0	0	0	0.0
Partition	0	-744	0	-744	-2.5
Exterior Floor	0	0	0	0	0.0
Interior Floor	0	-9212	0	-9212	-31.3
Slab	0	0	0	0	0.0
Other Floor	0	0	0	0	0.0
Infiltration	0	0	0	0	0.0
Envelope Subtotal	4932	5158	0	10091	-
People	1337	2930	3152	7418	25.2
Lights	728	1734	0	2462	8.4
RA Sensible (Lights)	835	0	0	835	2.8
Miscellaneous Loads	6154	7508	0	13662	46.4
Internal Subtotal	9054	12172	3152	24378	-
RA (All Other)	0	0	0	0	0.0
DOA Direct to Zone	0	0	0	0	0.0
Ceiling	0	-2892	0	-2892	-9.8
Refrigeration	0	0	0	0	0.0
Service Water	0	0	0	0	0.0
HVAC Equipment Losses	0	0	0	0	0.0
Adj Air Transfer Heat	0	0	0	0	0.0
Sizing Factor Correction	1426	0	0	1426	4.8
Time Delay Correction	0	-3581	0	-3581	-12.2
Grand Total	15412	10857	3152	29421	100.0

Engineering Checks

Cooling tons	2.45	Input Ventilation cfm	107
Cooling cfm	1,183.75	Calculated Ventilation cfm	150
ft²/ton	328.73	Number of People	11.64
cfm/ton	482.72	People per 1000 ft²	14
Conditioned ft²	805.9		

Conditions at Time of Heating Peak

Outside	DB / WB / HR	16.4 °F	/	12.6 °F	/	5.3 gr/lb
Zone	DB / RH / HR	70.0 °F	/	4.9 %	/	5.2 gr/lb

	Instant Sensible (Btu/h)	Time Delay Sensible (Btu/h)	Latent (Btu/h)	Total (Btu/h)	Percent of Total (%)
Roof	0	0	0	0	0.0
Other Roof	0	0	0	0	0.0
Glass	-3617	0	0	-3617	62.1
Door	0	26	0	26	-0.4
Wall	0	-179	0	-179	3.1
Below-Grade Wall	0	0	0	0	0.0
Other Wall	0	0	0	0	0.0
Partition	0	106	0	106	-1.8
Exterior Floor	0	0	0	0	0.0
Interior Floor	0	25	0	25	-0.4
Slab	0	0	0	0	0.0
Other Floor	0	0	0	0	0.0
Infiltration	0	0	0	0	0.0
Envelope Subtotal	-3617	-22	0	-3639	-
People	0	0	0	0	0.0
Lights	0	0	0	0	0.0
RA Sensible (Lights)	0	0	0	0	0.0
Miscellaneous Loads	0	0	0	0	0.0
Internal Subtotal	0	0	0	0	-
RA (All Other)	0	0	0	0	0.0
DOA Direct to Zone	0	0	0	0	0.0
Ceiling	0	-2188	0	-2188	37.5
Refrigeration	0	0	0	0	0.0
Service Water	0	0	0	0	0.0
HVAC Equipment Losses	0	0	0	0	0.0
Adj Air Transfer Heat	0	0	0	0	0.0
Sizing Factor Correction	0	0	0	0	0.0
Time Delay Correction	0	0	0	0	0.0
Grand Total	-3617	-2210	0	-5827	100.0

Engineering Checks

Heating Mbh	-5.83	Input Ventilation cfm	107
Heating cfm	355.12	Calculated Ventilation cfm	101
ft²/Mbh	-138.32	Number of People	11.64
cfm/Mbh	-60.95	People per 1000 ft²	14
Conditioned ft²	805.9		

ZONE_VAV-2-03

Conditions at Time of Cooling Peak

Outside	DB / WB / HR	73.6 °F	/	62.1 °F	/	65.2 gr/lb
Zone	DB / RH / HR	75.0 °F	/	51.6 %	/	66.8 gr/lb

	Instant Sensible (Btu/h)	Time Delay Sensible (Btu/h)	Latent (Btu/h)	Total (Btu/h)	Percent of Total (%)
Roof	0	0	0	0	0.0
Other Roof	0	0	0	0	0.0
Glass	4901	14190	0	19091	67.8
Door	0	-153	0	-153	-0.5
Wall	0	109	0	109	0.4
Below-Grade Wall	0	0	0	0	0.0
Other Wall	0	0	0	0	0.0
Partition	0	-709	0	-709	-2.5
Exterior Floor	0	0	0	0	0.0
Interior Floor	0	-8350	0	-8350	-29.7
Slab	0	0	0	0	0.0
Other Floor	0	0	0	0	0.0
Infiltration	0	0	0	0	0.0
Envelope Subtotal	4901	5087	0	9988	-
People	1270	2705	3024	6999	24.9
Lights	805	1824	0	2629	9.3
RA Sensible (Lights)	924	0	0	924	3.3
Miscellaneous Loads	6125	7057	0	13182	46.8
Internal Subtotal	9124	11585	3024	23734	-
RA (All Other)	0	0	0	0	0.0
DOA Direct to Zone	0	0	0	0	0.0
Ceiling	0	-2329	0	-2329	-8.3
Refrigeration	0	0	0	0	0.0
Service Water	0	0	0	0	0.0
HVAC Equipment Losses	0	0	0	0	0.0
Adj Air Transfer Heat	0	0	0	0	0.0
Sizing Factor Correction	0	0	0	0	0.0
Time Delay Correction	0	-3235	0	-3235	-11.5
Grand Total	14025	11108	3024	28158	100.0

Engineering Checks

Cooling tons	2.35	Input Ventilation cfm	111
Cooling cfm	1,237.89	Calculated Ventilation cfm	157
ft²/ton	400.69	Number of People	11.00
cfm/ton	527.45	People per 1000 ft²	12
Conditioned ft²	940.1		

Conditions at Time of Heating Peak

Outside	DB / WB / HR	16.4 °F	/	12.6 °F	/	5.3 gr/lb
Zone	DB / RH / HR	70.0 °F	/	4.9 %	/	5.2 gr/lb

	Instant Sensible (Btu/h)	Time Delay Sensible (Btu/h)	Latent (Btu/h)	Total (Btu/h)	Percent of Total (%)
Roof	0	0	0	0	0.0
Other Roof	0	0	0	0	0.0
Glass	-3312	0	0	-3312	57.4
Door	0	22	0	22	-0.4
Wall	0	-282	0	-282	4.9
Below-Grade Wall	0	0	0	0	0.0
Other Wall	0	0	0	0	0.0
Partition	0	108	0	108	-1.9
Exterior Floor	0	0	0	0	0.0
Interior Floor	0	181	0	181	-3.1
Slab	0	0	0	0	0.0
Other Floor	0	0	0	0	0.0
Infiltration	0	0	0	0	0.0
Envelope Subtotal	-3312	30	0	-3282	-
People	0	0	0	0	0.0
Lights	0	0	0	0	0.0
RA Sensible (Lights)	0	0	0	0	0.0
Miscellaneous Loads	0	0	0	0	0.0
Internal Subtotal	0	0	0	0	-
RA (All Other)	0	0	0	0	0.0
DOA Direct to Zone	0	0	0	0	0.0
Ceiling	0	-2483	0	-2483	43.1
Refrigeration	0	0	0	0	0.0
Service Water	0	0	0	0	0.0
HVAC Equipment Losses	0	0	0	0	0.0
Adj Air Transfer Heat	0	0	0	0	0.0
Sizing Factor Correction	0	0	0	0	0.0
Time Delay Correction	0	0	0	0	0.0
Grand Total	-3312	-2453	0	-5765	100.0

Engineering Checks

Heating Mbh	-5.76	Input Ventilation cfm	111
Heating cfm	371.37	Calculated Ventilation cfm	105
ft²/Mbh	-163.09	Number of People	11.00
cfm/Mbh	-64.42	People per 1000 ft²	12
Conditioned ft²	940.1		

ZONE_VAV-2-04

Conditions at Time of Cooling Peak

Outside	DB / WB / HR	83.1 °F	/	68.2 °F	/	80.3 gr/lb
Zone	DB / RH / HR	75.0 °F	/	52.0 %	/	67.3 gr/lb

	Instant Sensible (Btu/h)	Time Delay Sensible (Btu/h)	Latent (Btu/h)	Total (Btu/h)	Percent of Total (%)
Roof	0	0	0	0	0.0
Other Roof	0	0	0	0	0.0
Glass	5593	7754	0	13347	37.0
Door	0	-62	0	-62	-0.2
Wall	0	111	0	111	0.3
Below-Grade Wall	0	0	0	0	0.0
Other Wall	0	0	0	0	0.0
Partition	0	-793	0	-793	-2.2
Exterior Floor	0	0	0	0	0.0
Interior Floor	0	-5672	0	-5672	-15.7
Slab	0	0	0	0	0.0
Other Floor	0	0	0	0	0.0
Infiltration	0	0	0	0	0.0
Envelope Subtotal	5593	1337	0	6930	-
People	1723	3597	4052	9373	26.0
Lights	1206	2675	0	3881	10.7
RA Sensible (Lights)	1384	0	0	1384	3.8
Miscellaneous Loads	8466	9509	0	17975	49.8
Internal Subtotal	12779	15781	4052	32613	-
RA (All Other)	0	0	0	0	0.0
DOA Direct to Zone	0	0	0	0	0.0
Ceiling	0	-1248	0	-1248	-3.5
Refrigeration	0	0	0	0	0.0
Service Water	0	0	0	0	0.0
HVAC Equipment Losses	0	0	0	0	0.0
Adj Air Transfer Heat	0	0	0	0	0.0
Sizing Factor Correction	2008	0	0	2008	5.6
Time Delay Correction	0	-4188	0	-4188	-11.6
Grand Total	20380	11682	4052	36115	100.0

Engineering Checks

Cooling tons	3.01	Input Ventilation cfm	155
Cooling cfm	1,724.46	Calculated Ventilation cfm	218
ft²/ton	443.75	Number of People	15.02
cfm/ton	572.88	People per 1000 ft²	11
Conditioned ft²	1335.4		

Conditions at Time of Heating Peak

Outside	DB / WB / HR	16.4 °F	/	12.6 °F	/	5.3 gr/lb
Zone	DB / RH / HR	70.0 °F	/	4.9 %	/	5.2 gr/lb

	Instant Sensible (Btu/h)	Time Delay Sensible (Btu/h)	Latent (Btu/h)	Total (Btu/h)	Percent of Total (%)
Roof	0	0	0	0	0.0
Other Roof	0	0	0	0	0.0
Glass	-2671	0	0	-2671	38.1
Door	0	10	0	10	-0.1
Wall	0	-235	0	-235	3.3
Below-Grade Wall	0	0	0	0	0.0
Other Wall	0	0	0	0	0.0
Partition	0	-488	0	-488	7.0
Exterior Floor	0	0	0	0	0.0
Interior Floor	0	-44	0	-44	0.6
Slab	0	0	0	0	0.0
Other Floor	0	0	0	0	0.0
Infiltration	0	0	0	0	0.0
Envelope Subtotal	-2671	-757	0	-3428	-
People	0	0	0	0	0.0
Lights	0	0	0	0	0.0
RA Sensible (Lights)	0	0	0	0	0.0
Miscellaneous Loads	0	0	0	0	0.0
Internal Subtotal	0	0	0	0	-
RA (All Other)	0	0	0	0	0.0
DOA Direct to Zone	0	0	0	0	0.0
Ceiling	0	-3590	0	-3590	51.2
Refrigeration	0	0	0	0	0.0
Service Water	0	0	0	0	0.0
HVAC Equipment Losses	0	0	0	0	0.0
Adj Air Transfer Heat	0	0	0	0	0.0
Sizing Factor Correction	0	0	0	0	0.0
Time Delay Correction	0	0	0	0	0.0
Grand Total	-2671	-4347	0	-7018	100.0

Engineering Checks

Heating Mbh	-7.02	Input Ventilation cfm	155
Heating cfm	517.34	Calculated Ventilation cfm	147
ft²/Mbh	-190.28	Number of People	15.02
cfm/Mbh	-73.71	People per 1000 ft²	11
Conditioned ft²	1335.4		

ZONE_VAV-2-05

Conditions at Time of Cooling Peak

Outside	DB / WB / HR	73.6 °F	/	62.1 °F	/	65.2 gr/lb
Zone	DB / RH / HR	75.0 °F	/	51.7 %	/	66.9 gr/lb

	Instant Sensible (Btu/h)	Time Delay Sensible (Btu/h)	Latent (Btu/h)	Total (Btu/h)	Percent of Total (%)
Roof	0	0	0	0	0.0
Other Roof	0	0	0	0	0.0
Glass	4817	14050	0	18866	62.2
Door	0	-80	0	-80	-0.3
Wall	0	88	0	88	0.3
Below-Grade Wall	0	0	0	0	0.0
Other Wall	0	0	0	0	0.0
Partition	0	-810	0	-810	-2.7
Exterior Floor	0	0	0	0	0.0
Interior Floor	0	-8173	0	-8173	-27.0
Slab	0	0	0	0	0.0
Other Floor	0	0	0	0	0.0
Infiltration	0	0	0	0	0.0
Envelope Subtotal	4817	5075	0	9891	-
People	1343	2925	3163	7431	24.5
Lights	831	1872	0	2703	8.9
RA Sensible (Lights)	954	0	0	954	3.1
Miscellaneous Loads	6388	7451	0	13839	45.7
Internal Subtotal	9516	12248	3163	24927	-
RA (All Other)	0	0	0	0	0.0
DOA Direct to Zone	0	0	0	0	0.0
Ceiling	0	-2345	0	-2345	-7.7
Refrigeration	0	0	0	0	0.0
Service Water	0	0	0	0	0.0
HVAC Equipment Losses	0	0	0	0	0.0
Adj Air Transfer Heat	0	0	0	0	0.0
Sizing Factor Correction	1633	0	0	1633	5.4
Time Delay Correction	0	-3798	0	-3798	-12.5
Grand Total	15965	11181	3163	30309	100.0

Engineering Checks

Cooling tons	2.53	Input Ventilation cfm	114
Cooling cfm	1,263.14	Calculated Ventilation cfm	160
ft²/ton	364.36	Number of People	11.69
cfm/ton	500.00	People per 1000 ft²	13
Conditioned ft²	920.2		

Conditions at Time of Heating Peak

Outside	DB / WB / HR	16.4 °F	/	12.6 °F	/	5.3 gr/lb
Zone	DB / RH / HR	70.0 °F	/	4.9 %	/	5.2 gr/lb

	Instant Sensible (Btu/h)	Time Delay Sensible (Btu/h)	Latent (Btu/h)	Total (Btu/h)	Percent of Total (%)
Roof	0	0	0	0	0.0
Other Roof	0	0	0	0	0.0
Glass	-3233	0	0	-3233	56.8
Door	0	11	0	11	-0.2
Wall	0	-271	0	-271	4.8
Below-Grade Wall	0	0	0	0	0.0
Other Wall	0	0	0	0	0.0
Partition	0	119	0	119	-2.1
Exterior Floor	0	0	0	0	0.0
Interior Floor	0	115	0	115	-2.0
Slab	0	0	0	0	0.0
Other Floor	0	0	0	0	0.0
Infiltration	0	0	0	0	0.0
Envelope Subtotal	-3233	-26	0	-3259	-
People	0	0	0	0	0.0
Lights	0	0	0	0	0.0
RA Sensible (Lights)	0	0	0	0	0.0
Miscellaneous Loads	0	0	0	0	0.0
Internal Subtotal	0	0	0	0	-
RA (All Other)	0	0	0	0	0.0
DOA Direct to Zone	0	0	0	0	0.0
Ceiling	0	-2431	0	-2431	42.7
Refrigeration	0	0	0	0	0.0
Service Water	0	0	0	0	0.0
HVAC Equipment Losses	0	0	0	0	0.0
Adj Air Transfer Heat	0	0	0	0	0.0
Sizing Factor Correction	0	0	0	0	0.0
Time Delay Correction	0	0	0	0	0.0
Grand Total	-3233	-2457	0	-5690	100.0

Engineering Checks

Heating Mbh	-5.69	Input Ventilation cfm	114
Heating cfm	378.94	Calculated Ventilation cfm	108
ft²/Mbh	-161.74	Number of People	11.69
cfm/Mbh	-66.60	People per 1000 ft²	13
Conditioned ft²	920.2		

ZONE_VAV-2-06

Conditions at Time of Cooling Peak

Outside	DB / WB / HR	73.6 °F	/	62.1 °F	/	65.2 gr/lb
Zone	DB / RH / HR	75.0 °F	/	50.8 %	/	65.7 gr/lb

	Instant Sensible (Btu/h)	Time Delay Sensible (Btu/h)	Latent (Btu/h)	Total (Btu/h)	Percent of Total (%)
Roof	0	0	0	0	0.0
Other Roof	0	0	0	0	0.0
Glass	5093	14280	0	19373	70.9
Door	0	0	0	0	0.0
Wall	0	119	0	119	0.4
Below-Grade Wall	0	0	0	0	0.0
Other Wall	0	0	0	0	0.0
Partition	0	-678	0	-678	-2.5
Exterior Floor	0	0	0	0	0.0
Interior Floor	0	-8123	0	-8123	-29.7
Slab	0	0	0	0	0.0
Other Floor	0	0	0	0	0.0
Infiltration	0	0	0	0	0.0
Envelope Subtotal	5093	5599	0	10692	-
People	1155	2420	2199	5774	21.1
Lights	791	1715	0	2506	9.2
RA Sensible (Lights)	908	0	0	908	3.3
Miscellaneous Loads	6106	6835	0	12941	47.4
Internal Subtotal	8960	10970	2199	22130	-
RA (All Other)	0	0	0	0	0.0
DOA Direct to Zone	0	0	0	0	0.0
Ceiling	0	-2140	0	-2140	-7.8
Refrigeration	0	0	0	0	0.0
Service Water	0	0	0	0	0.0
HVAC Equipment Losses	0	0	0	0	0.0
Adj Air Transfer Heat	0	0	0	0	0.0
Sizing Factor Correction	0	0	0	0	0.0
Time Delay Correction	0	-3353	0	-3353	-12.3
Grand Total	14054	11076	2199	27329	100.0

Engineering Checks

Cooling tons	2.28	Input Ventilation cfm	110
Cooling cfm	1,225.48	Calculated Ventilation cfm	155
ft²/ton	404.66	Number of People	11.00
cfm/ton	537.99	People per 1000 ft²	12
Conditioned ft²	921.5		

Conditions at Time of Heating Peak

Outside	DB / WB / HR	16.4 °F	/	12.6 °F	/	5.3 gr/lb
Zone	DB / RH / HR	70.0 °F	/	4.9 %	/	5.2 gr/lb

	Instant Sensible (Btu/h)	Time Delay Sensible (Btu/h)	Latent (Btu/h)	Total (Btu/h)	Percent of Total (%)
Roof	0	0	0	0	0.0
Other Roof	0	0	0	0	0.0
Glass	-3686	0	0	-3686	60.0
Door	0	0	0	0	0.0
Wall	0	-272	0	-272	4.4
Below-Grade Wall	0	0	0	0	0.0
Other Wall	0	0	0	0	0.0
Partition	0	110	0	110	-1.8
Exterior Floor	0	0	0	0	0.0
Interior Floor	0	224	0	224	-3.6
Slab	0	0	0	0	0.0
Other Floor	0	0	0	0	0.0
Infiltration	0	0	0	0	0.0
Envelope Subtotal	-3686	62	0	-3624	-
People	0	0	0	0	0.0
Lights	0	0	0	0	0.0
RA Sensible (Lights)	0	0	0	0	0.0
Miscellaneous Loads	0	0	0	0	0.0
Internal Subtotal	0	0	0	0	-
RA (All Other)	0	0	0	0	0.0
DOA Direct to Zone	0	0	0	0	0.0
Ceiling	0	-2519	0	-2519	41.0
Refrigeration	0	0	0	0	0.0
Service Water	0	0	0	0	0.0
HVAC Equipment Losses	0	0	0	0	0.0
Adj Air Transfer Heat	0	0	0	0	0.0
Sizing Factor Correction	0	0	0	0	0.0
Time Delay Correction	0	0	0	0	0.0
Grand Total	-3686	-2457	0	-6143	100.0

Engineering Checks

Heating Mbh	-6.14	Input Ventilation cfm	110
Heating cfm	367.64	Calculated Ventilation cfm	104
ft²/Mbh	-150.02	Number of People	11.00
cfm/Mbh	-59.85	People per 1000 ft²	12
Conditioned ft²	921.5		

ZONE_VAV-2-07

Conditions at Time of Cooling Peak

Outside	DB / WB / HR	75.6 °F	/	65.9 °F	/	80.2 gr/lb
Zone	DB / RH / HR	75.0 °F	/	51.2 %	/	66.2 gr/lb

	Instant Sensible (Btu/h)	Time Delay Sensible (Btu/h)	Latent (Btu/h)	Total (Btu/h)	Percent of Total (%)
Roof	0	0	0	0	0.0
Other Roof	0	0	0	0	0.0
Glass	6011	19999	0	26011	74.1
Door	0	0	0	0	0.0
Wall	0	118	0	118	0.3
Below-Grade Wall	0	0	0	0	0.0
Other Wall	0	0	0	0	0.0
Partition	0	-307	0	-307	-0.9
Exterior Floor	0	0	0	0	0.0
Interior Floor	0	-9553	0	-9553	-27.2
Slab	0	0	0	0	0.0
Other Floor	0	0	0	0	0.0
Infiltration	0	0	0	0	0.0
Envelope Subtotal	6011	10257	0	16269	-
People	1341	2412	3159	6912	19.7
Lights	810	1660	0	2470	7.0
RA Sensible (Lights)	930	0	0	930	2.6
Miscellaneous Loads	6340	6548	0	12888	36.7
Internal Subtotal	9421	10620	3159	23200	-
RA (All Other)	0	0	0	0	0.0
DOA Direct to Zone	0	0	0	0	0.0
Ceiling	0	-3268	0	-3268	-9.3
Refrigeration	0	0	0	0	0.0
Service Water	0	0	0	0	0.0
HVAC Equipment Losses	0	0	0	0	0.0
Adj Air Transfer Heat	0	0	0	0	0.0
Sizing Factor Correction	1867	0	0	1867	5.3
Time Delay Correction	0	-2965	0	-2965	-8.4
Grand Total	17299	14644	3159	35103	100.0

Engineering Checks

Cooling tons	2.93	Input Ventilation cfm	112
Cooling cfm	1,419.70	Calculated Ventilation cfm	179
ft²/ton	306.66	Number of People	11.67
cfm/ton	485.23	People per 1000 ft²	13
Conditioned ft²	897.0		

Conditions at Time of Heating Peak

Outside	DB / WB / HR	16.4 °F	/	12.6 °F	/	5.3 gr/lb
Zone	DB / RH / HR	70.0 °F	/	4.9 %	/	5.2 gr/lb

	Instant Sensible (Btu/h)	Time Delay Sensible (Btu/h)	Latent (Btu/h)	Total (Btu/h)	Percent of Total (%)
Roof	0	0	0	0	0.0
Other Roof	0	0	0	0	0.0
Glass	-7183	0	0	-7183	69.9
Door	0	0	0	0	0.0
Wall	0	-740	0	-740	7.2
Below-Grade Wall	0	0	0	0	0.0
Other Wall	0	0	0	0	0.0
Partition	0	76	0	76	-0.7
Exterior Floor	0	0	0	0	0.0
Interior Floor	0	200	0	200	-1.9
Slab	0	0	0	0	0.0
Other Floor	0	0	0	0	0.0
Infiltration	0	0	0	0	0.0
Envelope Subtotal	-7183	-464	0	-7648	-
People	0	0	0	0	0.0
Lights	0	0	0	0	0.0
RA Sensible (Lights)	0	0	0	0	0.0
Miscellaneous Loads	0	0	0	0	0.0
Internal Subtotal	0	0	0	0	-
RA (All Other)	0	0	0	0	0.0
DOA Direct to Zone	0	0	0	0	0.0
Ceiling	0	-2622	0	-2622	25.5
Refrigeration	0	0	0	0	0.0
Service Water	0	0	0	0	0.0
HVAC Equipment Losses	0	0	0	0	0.0
Adj Air Transfer Heat	0	0	0	0	0.0
Sizing Factor Correction	0	0	0	0	0.0
Time Delay Correction	0	0	0	0	0.0
Grand Total	-7183	-3086	0	-10270	100.0

Engineering Checks

Heating Mbh	-10.27	Input Ventilation cfm	112
Heating cfm	425.91	Calculated Ventilation cfm	121
ft²/Mbh	-87.35	Number of People	11.67
cfm/Mbh	-41.47	People per 1000 ft²	13
Conditioned ft²	897.0		

ZONE_VAV-2-08

Conditions at Time of Cooling Peak

Outside	DB / WB / HR	88.3 °F	/	73.2 °F	/	99.5 gr/lb
Zone	DB / RH / HR	75.0 °F	/	49.8 %	/	64.3 gr/lb

	Instant Sensible (Btu/h)	Time Delay Sensible (Btu/h)	Latent (Btu/h)	Total (Btu/h)	Percent of Total (%)
Roof	0	0	0	0	0.0
Other Roof	0	0	0	0	0.0
Glass	5717	17336	0	23053	68.7
Door	0	-36	0	-36	-0.1
Wall	0	247	0	247	0.7
Below-Grade Wall	0	0	0	0	0.0
Other Wall	0	0	0	0	0.0
Partition	0	-376	0	-376	-1.1
Exterior Floor	0	0	0	0	0.0
Interior Floor	0	-6003	0	-6003	-17.9
Slab	0	0	0	0	0.0
Other Floor	0	0	0	0	0.0
Infiltration	0	0	0	0	0.0
Envelope Subtotal	5717	11168	0	16885	-
People	772	1802	1470	4044	12.1
Lights	897	2310	0	3208	9.6
RA Sensible (Lights)	1030	0	0	1030	3.1
Miscellaneous Loads	4634	5722	0	10356	30.9
Internal Subtotal	7334	9834	1470	18638	-
RA (All Other)	0	0	0	0	0.0
DOA Direct to Zone	0	0	0	0	0.0
Ceiling	0	-125	0	-125	-0.4
Refrigeration	0	0	0	0	0.0
Service Water	0	0	0	0	0.0
HVAC Equipment Losses	0	0	0	0	0.0
Adj Air Transfer Heat	0	0	0	0	0.0
Sizing Factor Correction	0	0	0	0	0.0
Time Delay Correction	0	-1842	0	-1842	-5.5
Grand Total	13051	19035	1470	33556	100.0

Engineering Checks

Cooling tons	2.80	Input Ventilation cfm	100
Cooling cfm	1,421.06	Calculated Ventilation cfm	203
ft²/ton	378.15	Number of People	7.35
cfm/ton	508.09	People per 1000 ft²	7
Conditioned ft²	1057.3		

Conditions at Time of Heating Peak

Outside	DB / WB / HR	16.4 °F	/	12.6 °F	/	5.3 gr/lb
Zone	DB / RH / HR	70.0 °F	/	4.9 %	/	5.2 gr/lb

	Instant Sensible (Btu/h)	Time Delay Sensible (Btu/h)	Latent (Btu/h)	Total (Btu/h)	Percent of Total (%)
Roof	0	0	0	0	0.0
Other Roof	0	0	0	0	0.0
Glass	-8144	0	0	-8144	74.3
Door	0	67	0	67	-0.6
Wall	0	-660	0	-660	6.0
Below-Grade Wall	0	0	0	0	0.0
Other Wall	0	0	0	0	0.0
Partition	0	685	0	685	-6.2
Exterior Floor	0	0	0	0	0.0
Interior Floor	0	-136	0	-136	1.2
Slab	0	0	0	0	0.0
Other Floor	0	0	0	0	0.0
Infiltration	0	0	0	0	0.0
Envelope Subtotal	-8144	-44	0	-8189	-
People	0	0	0	0	0.0
Lights	0	0	0	0	0.0
RA Sensible (Lights)	0	0	0	0	0.0
Miscellaneous Loads	0	0	0	0	0.0
Internal Subtotal	0	0	0	0	-
RA (All Other)	0	0	0	0	0.0
DOA Direct to Zone	0	0	0	0	0.0
Ceiling	0	-2779	0	-2779	25.3
Refrigeration	0	0	0	0	0.0
Service Water	0	0	0	0	0.0
HVAC Equipment Losses	0	0	0	0	0.0
Adj Air Transfer Heat	0	0	0	0	0.0
Sizing Factor Correction	0	0	0	0	0.0
Time Delay Correction	0	0	0	0	0.0
Grand Total	-8144	-2823	0	-10967	100.0

Engineering Checks

Heating Mbh	-10.97	Input Ventilation cfm	100
Heating cfm	426.32	Calculated Ventilation cfm	114
ft²/Mbh	-96.42	Number of People	7.35
cfm/Mbh	-38.87	People per 1000 ft²	7
Conditioned ft²	1057.3		

ZONE_VAV-2-09

Conditions at Time of Cooling Peak

Outside	DB / WB / HR	83.9 °F	/	71.2 °F	/	95.0 gr/lb
Zone	DB / RH / HR	75.0 °F	/	51.7 %	/	66.8 gr/lb

	Instant Sensible (Btu/h)	Time Delay Sensible (Btu/h)	Latent (Btu/h)	Total (Btu/h)	Percent of Total (%)
Roof	0	0	0	0	0.0
Other Roof	0	0	0	0	0.0
Glass	3408	4098	0	7506	37.2
Door	0	-115	0	-115	-0.6
Wall	0	-65	0	-65	-0.3
Below-Grade Wall	0	0	0	0	0.0
Other Wall	0	0	0	0	0.0
Partition	0	-532	0	-532	-2.6
Exterior Floor	0	0	0	0	0.0
Interior Floor	0	-4169	0	-4169	-20.7
Slab	0	0	0	0	0.0
Other Floor	0	0	0	0	0.0
Infiltration	0	0	0	0	0.0
Envelope Subtotal	3408	-783	0	2625	-
People	865	2268	2033	5167	25.6
Lights	763	1995	0	2758	13.7
RA Sensible (Lights)	876	0	0	876	4.3
Miscellaneous Loads	4597	6093	0	10690	53.0
Internal Subtotal	7101	10356	2033	19491	-
RA (All Other)	0	0	0	0	0.0
DOA Direct to Zone	0	0	0	0	0.0
Ceiling	0	-463	0	-463	-2.3
Refrigeration	0	0	0	0	0.0
Service Water	0	0	0	0	0.0
HVAC Equipment Losses	0	0	0	0	0.0
Adj Air Transfer Heat	0	0	0	0	0.0
Sizing Factor Correction	1298	0	0	1298	6.4
Time Delay Correction	0	-2776	0	-2776	-13.8
Grand Total	11808	6334	2033	20175	100.0

Engineering Checks

Cooling tons	1.68	Input Ventilation cfm	88
Cooling cfm	982.62	Calculated Ventilation cfm	141
ft²/ton	502.76	Number of People	7.54
cfm/ton	584.34	People per 1000 ft²	9
Conditioned ft²	845.2		

Conditions at Time of Heating Peak

Outside	DB / WB / HR	16.4 °F	/	12.6 °F	/	5.3 gr/lb
Zone	DB / RH / HR	70.0 °F	/	4.9 %	/	5.2 gr/lb

	Instant Sensible (Btu/h)	Time Delay Sensible (Btu/h)	Latent (Btu/h)	Total (Btu/h)	Percent of Total (%)
Roof	0	0	0	0	0.0
Other Roof	0	0	0	0	0.0
Glass	-3689	0	0	-3689	62.3
Door	0	33	0	33	-0.6
Wall	0	-244	0	-244	4.1
Below-Grade Wall	0	0	0	0	0.0
Other Wall	0	0	0	0	0.0
Partition	0	158	0	158	-2.7
Exterior Floor	0	0	0	0	0.0
Interior Floor	0	50	0	50	-0.8
Slab	0	0	0	0	0.0
Other Floor	0	0	0	0	0.0
Infiltration	0	0	0	0	0.0
Envelope Subtotal	-3689	-4	0	-3693	-
People	0	0	0	0	0.0
Lights	0	0	0	0	0.0
RA Sensible (Lights)	0	0	0	0	0.0
Miscellaneous Loads	0	0	0	0	0.0
Internal Subtotal	0	0	0	0	-
RA (All Other)	0	0	0	0	0.0
DOA Direct to Zone	0	0	0	0	0.0
Ceiling	0	-2229	0	-2229	37.6
Refrigeration	0	0	0	0	0.0
Service Water	0	0	0	0	0.0
HVAC Equipment Losses	0	0	0	0	0.0
Adj Air Transfer Heat	0	0	0	0	0.0
Sizing Factor Correction	0	0	0	0	0.0
Time Delay Correction	0	0	0	0	0.0
Grand Total	-3689	-2234	0	-5922	100.0

Engineering Checks

Heating Mbh	-5.92	Input Ventilation cfm	88
Heating cfm	294.78	Calculated Ventilation cfm	79
ft²/Mbh	-142.72	Number of People	7.54
cfm/Mbh	-49.77	People per 1000 ft²	9
Conditioned ft²	845.2		

ZONE_VAV-2-10

Conditions at Time of Cooling Peak

Outside	DB / WB / HR	90.3 °F	/	73.7 °F	/	99.5 gr/lb
Zone	DB / RH / HR	75.0 °F	/	52.0 %	/	67.3 gr/lb

	Instant Sensible (Btu/h)	Time Delay Sensible (Btu/h)	Latent (Btu/h)	Total (Btu/h)	Percent of Total (%)
Roof	0	0	0	0	0.0
Other Roof	0	0	0	0	0.0
Glass	2297	2683	0	4980	26.6
Door	0	-100	0	-100	-0.5
Wall	0	-51	0	-51	-0.3
Below-Grade Wall	0	0	0	0	0.0
Other Wall	0	0	0	0	0.0
Partition	0	-1239	0	-1239	-6.6
Exterior Floor	0	0	0	0	0.0
Interior Floor	0	-3548	0	-3548	-19.0
Slab	0	0	0	0	0.0
Other Floor	0	0	0	0	0.0
Infiltration	0	0	0	0	0.0
Envelope Subtotal	2297	-2256	0	41	-
People	924	2263	2199	5386	28.8
Lights	783	2230	0	3013	16.1
RA Sensible (Lights)	899	0	0	899	4.8
Miscellaneous Loads	4868	6796	0	11664	62.4
Internal Subtotal	7474	11289	2199	20962	-
RA (All Other)	0	0	0	0	0.0
DOA Direct to Zone	0	0	0	0	0.0
Ceiling	0	102	0	102	0.5
Refrigeration	0	0	0	0	0.0
Service Water	0	0	0	0	0.0
HVAC Equipment Losses	0	0	0	0	0.0
Adj Air Transfer Heat	0	0	0	0	0.0
Sizing Factor Correction	0	0	0	0	0.0
Time Delay Correction	0	-2416	0	-2416	-12.9
Grand Total	9771	6719	2199	18689	100.0

Engineering Checks

Cooling tons	1.56	Input Ventilation cfm	95
Cooling cfm	1,051.48	Calculated Ventilation cfm	151
ft²/ton	584.69	Number of People	8.00
cfm/ton	675.01	People per 1000 ft²	9
Conditioned ft²	910.5		

Conditions at Time of Heating Peak

Outside	DB / WB / HR	16.4 °F	/	12.6 °F	/	5.3 gr/lb
Zone	DB / RH / HR	70.0 °F	/	4.9 %	/	5.2 gr/lb

	Instant Sensible (Btu/h)	Time Delay Sensible (Btu/h)	Latent (Btu/h)	Total (Btu/h)	Percent of Total (%)
Roof	0	0	0	0	0.0
Other Roof	0	0	0	0	0.0
Glass	-3348	0	0	-3348	58.4
Door	0	25	0	25	-0.4
Wall	0	-278	0	-278	4.8
Below-Grade Wall	0	0	0	0	0.0
Other Wall	0	0	0	0	0.0
Partition	0	166	0	166	-2.9
Exterior Floor	0	0	0	0	0.0
Interior Floor	0	75	0	75	-1.3
Slab	0	0	0	0	0.0
Other Floor	0	0	0	0	0.0
Infiltration	0	0	0	0	0.0
Envelope Subtotal	-3348	-12	0	-3361	-
People	0	0	0	0	0.0
Lights	0	0	0	0	0.0
RA Sensible (Lights)	0	0	0	0	0.0
Miscellaneous Loads	0	0	0	0	0.0
Internal Subtotal	0	0	0	0	-
RA (All Other)	0	0	0	0	0.0
DOA Direct to Zone	0	0	0	0	0.0
Ceiling	0	-2376	0	-2376	41.4
Refrigeration	0	0	0	0	0.0
Service Water	0	0	0	0	0.0
HVAC Equipment Losses	0	0	0	0	0.0
Adj Air Transfer Heat	0	0	0	0	0.0
Sizing Factor Correction	0	0	0	0	0.0
Time Delay Correction	0	0	0	0	0.0
Grand Total	-3348	-2388	0	-5737	100.0

Engineering Checks

Heating Mbh	-5.74	Input Ventilation cfm	95
Heating cfm	315.44	Calculated Ventilation cfm	84
ft²/Mbh	-158.74	Number of People	8.00
cfm/Mbh	-54.99	People per 1000 ft²	9
Conditioned ft²	910.5		

ZONE_VAV-2-11

Conditions at Time of Cooling Peak

Outside	DB / WB / HR	88.5 °F	/	72.7 °F	/	96.6 gr/lb
Zone	DB / RH / HR	75.0 °F	/	50.0 %	/	64.6 gr/lb

	Instant Sensible (Btu/h)	Time Delay Sensible (Btu/h)	Latent (Btu/h)	Total (Btu/h)	Percent of Total (%)
Roof	0	0	0	0	0.0
Other Roof	0	0	0	0	0.0
Glass	704	4396	0	5100	96.5
Door	0	0	0	0	0.0
Wall	0	-3	0	-3	-0.1
Below-Grade Wall	0	0	0	0	0.0
Other Wall	0	0	0	0	0.0
Partition	0	-552	0	-552	-10.5
Exterior Floor	0	0	0	0	0.0
Interior Floor	0	-1047	0	-1047	-19.8
Slab	0	0	0	0	0.0
Other Floor	0	0	0	0	0.0
Infiltration	0	0	0	0	0.0
Envelope Subtotal	704	2794	0	3499	-
People	141	369	269	780	14.8
Lights	63	172	0	235	4.4
RA Sensible (Lights)	72	0	0	72	1.4
Miscellaneous Loads	552	735	0	1287	24.4
Internal Subtotal	828	1276	269	2374	-
RA (All Other)	0	0	0	0	0.0
DOA Direct to Zone	0	0	0	0	0.0
Ceiling	0	-320	0	-320	-6.1
Refrigeration	0	0	0	0	0.0
Service Water	0	0	0	0	0.0
HVAC Equipment Losses	0	0	0	0	0.0
Adj Air Transfer Heat	0	0	0	0	0.0
Sizing Factor Correction	0	0	0	0	0.0
Time Delay Correction	0	-269	0	-269	-5.1
Grand Total	1532	3482	269	5284	100.0

Engineering Checks

Cooling tons	0.44	Input Ventilation cfm	11
Cooling cfm	226.20	Calculated Ventilation cfm	29
ft²/ton	157.93	Number of People	1.35
cfm/ton	513.60	People per 1000 ft²	19
Conditioned ft²	69.5		

Conditions at Time of Heating Peak

Outside	DB / WB / HR	16.4 °F	/	12.6 °F	/	5.3 gr/lb
Zone	DB / RH / HR	70.0 °F	/	4.9 %	/	5.2 gr/lb

	Instant Sensible (Btu/h)	Time Delay Sensible (Btu/h)	Latent (Btu/h)	Total (Btu/h)	Percent of Total (%)
Roof	0	0	0	0	0.0
Other Roof	0	0	0	0	0.0
Glass	-779	0	0	-779	62.7
Door	0	0	0	0	0.0
Wall	0	-129	0	-129	10.4
Below-Grade Wall	0	0	0	0	0.0
Other Wall	0	0	0	0	0.0
Partition	0	-93	0	-93	7.5
Exterior Floor	0	0	0	0	0.0
Interior Floor	0	-26	0	-26	2.1
Slab	0	0	0	0	0.0
Other Floor	0	0	0	0	0.0
Infiltration	0	0	0	0	0.0
Envelope Subtotal	-779	-248	0	-1027	-
People	0	0	0	0	0.0
Lights	0	0	0	0	0.0
RA Sensible (Lights)	0	0	0	0	0.0
Miscellaneous Loads	0	0	0	0	0.0
Internal Subtotal	0	0	0	0	-
RA (All Other)	0	0	0	0	0.0
DOA Direct to Zone	0	0	0	0	0.0
Ceiling	0	-216	0	-216	17.4
Refrigeration	0	0	0	0	0.0
Service Water	0	0	0	0	0.0
HVAC Equipment Losses	0	0	0	0	0.0
Adj Air Transfer Heat	0	0	0	0	0.0
Sizing Factor Correction	0	0	0	0	0.0
Time Delay Correction	0	0	0	0	0.0
Grand Total	-779	-464	0	-1243	100.0

Engineering Checks

Heating Mbh	-1.24	Input Ventilation cfm	11
Heating cfm	67.86	Calculated Ventilation cfm	19
ft²/Mbh	-55.93	Number of People	1.35
cfm/Mbh	-54.58	People per 1000 ft²	19
Conditioned ft²	69.5		

ZONE_VAV-2-12

Conditions at Time of Cooling Peak

Outside	DB / WB / HR	80.4 °F	/	70.9 °F	/	99.4 gr/lb
Zone	DB / RH / HR	75.0 °F	/	49.7 %	/	64.3 gr/lb

	Instant Sensible (Btu/h)	Time Delay Sensible (Btu/h)	Latent (Btu/h)	Total (Btu/h)	Percent of Total (%)
Roof	0	0	0	0	0.0
Other Roof	0	0	0	0	0.0
Glass	1612	19970	0	21582	193.7
Door	0	0	0	0	0.0
Wall	0	-712	0	-712	-6.4
Below-Grade Wall	0	0	0	0	0.0
Other Wall	0	0	0	0	0.0
Partition	0	0	0	0	0.0
Exterior Floor	0	0	0	0	0.0
Interior Floor	0	-12734	0	-12734	-114.3
Slab	0	0	0	0	0.0
Other Floor	0	0	0	0	0.0
Infiltration	0	0	0	0	0.0
Envelope Subtotal	1612	6523	0	8135	-
People	227	609	432	1267	11.4
Lights	390	1252	0	1642	14.7
RA Sensible (Lights)	448	0	0	448	4.0
Miscellaneous Loads	884	1319	0	2203	19.8
Internal Subtotal	1948	3180	432	5560	-
RA (All Other)	0	0	0	0	0.0
DOA Direct to Zone	0	0	0	0	0.0
Ceiling	0	-2886	0	-2886	-25.9
Refrigeration	0	0	0	0	0.0
Service Water	0	0	0	0	0.0
HVAC Equipment Losses	0	0	0	0	0.0
Adj Air Transfer Heat	0	0	0	0	0.0
Sizing Factor Correction	714	0	0	714	6.4
Time Delay Correction	0	-382	0	-382	-3.4
Grand Total	4273	6436	432	11140	100.0

Engineering Checks

Cooling tons	0.93	Input Ventilation cfm	37
Cooling cfm	771.99	Calculated Ventilation cfm	111
ft²/ton	465.10	Number of People	2.16
cfm/ton	831.40	People per 1000 ft²	5
Conditioned ft²	431.7		

Conditions at Time of Heating Peak

Outside	DB / WB / HR	16.4 °F	/	12.6 °F	/	5.3 gr/lb
Zone	DB / RH / HR	70.0 °F	/	4.9 %	/	5.2 gr/lb

	Instant Sensible (Btu/h)	Time Delay Sensible (Btu/h)	Latent (Btu/h)	Total (Btu/h)	Percent of Total (%)
Roof	0	0	0	0	0.0
Other Roof	0	0	0	0	0.0
Glass	-4502	0	0	-4502	72.2
Door	0	0	0	0	0.0
Wall	0	-500	0	-500	8.0
Below-Grade Wall	0	0	0	0	0.0
Other Wall	0	0	0	0	0.0
Partition	0	0	0	0	0.0
Exterior Floor	0	0	0	0	0.0
Interior Floor	0	44	0	44	-0.7
Slab	0	0	0	0	0.0
Other Floor	0	0	0	0	0.0
Infiltration	0	0	0	0	0.0
Envelope Subtotal	-4502	-457	0	-4959	-
People	0	0	0	0	0.0
Lights	0	0	0	0	0.0
RA Sensible (Lights)	0	0	0	0	0.0
Miscellaneous Loads	0	0	0	0	0.0
Internal Subtotal	0	0	0	0	-
RA (All Other)	0	0	0	0	0.0
DOA Direct to Zone	0	0	0	0	0.0
Ceiling	0	-1274	0	-1274	20.4
Refrigeration	0	0	0	0	0.0
Service Water	0	0	0	0	0.0
HVAC Equipment Losses	0	0	0	0	0.0
Adj Air Transfer Heat	0	0	0	0	0.0
Sizing Factor Correction	0	0	0	0	0.0
Time Delay Correction	0	0	0	0	0.0
Grand Total	-4502	-1731	0	-6233	100.0

Engineering Checks

Heating Mbh	-6.23	Input Ventilation cfm	37
Heating cfm	231.60	Calculated Ventilation cfm	62
ft²/Mbh	-69.27	Number of People	2.16
cfm/Mbh	-37.16	People per 1000 ft²	5
Conditioned ft²	431.7		

ZONE_VAV-2-13

Conditions at Time of Cooling Peak

Outside	DB / WB / HR	83.2 °F	/	71.0 °F	/	95.0 gr/lb
Zone	DB / RH / HR	75.0 °F	/	50.2 %	/	64.9 gr/lb

	Instant Sensible (Btu/h)	Time Delay Sensible (Btu/h)	Latent (Btu/h)	Total (Btu/h)	Percent of Total (%)
Roof	0	0	0	0	0.0
Other Roof	0	0	0	0	0.0
Glass	1248	3248	0	4496	50.2
Door	0	-95	0	-95	-1.1
Wall	0	32	0	32	0.4
Below-Grade Wall	0	0	0	0	0.0
Other Wall	0	0	0	0	0.0
Partition	0	-186	0	-186	-2.1
Exterior Floor	0	-1	0	-1	0.0
Interior Floor	0	-1037	0	-1037	-11.6
Slab	0	0	0	0	0.0
Other Floor	0	0	0	0	0.0
Infiltration	0	0	0	0	0.0
Envelope Subtotal	1248	1961	0	3209	-
People	249	530	474	1252	14.0
Lights	537	1331	0	1868	20.9
RA Sensible (Lights)	617	0	0	617	6.9
Miscellaneous Loads	611	658	0	1270	14.2
Internal Subtotal	2014	2519	474	5007	-
RA (All Other)	0	0	0	0	0.0
DOA Direct to Zone	0	0	0	0	0.0
Ceiling	0	180	0	180	2.0
Refrigeration	0	0	0	0	0.0
Service Water	0	0	0	0	0.0
HVAC Equipment Losses	0	0	0	0	0.0
Adj Air Transfer Heat	0	0	0	0	0.0
Sizing Factor Correction	653	0	0	653	7.3
Time Delay Correction	0	-98	0	-98	-1.1
Grand Total	3915	4562	474	8951	100.0

Engineering Checks

Cooling tons	0.75	Input Ventilation cfm	40
Cooling cfm	783.79	Calculated Ventilation cfm	112
ft²/ton	635.47	Number of People	2.37
cfm/ton	1,050.63	People per 1000 ft²	5
Conditioned ft²	473.9		

Conditions at Time of Heating Peak

Outside	DB / WB / HR	16.4 °F	/	12.6 °F	/	5.3 gr/lb
Zone	DB / RH / HR	70.0 °F	/	4.9 %	/	5.2 gr/lb

	Instant Sensible (Btu/h)	Time Delay Sensible (Btu/h)	Latent (Btu/h)	Total (Btu/h)	Percent of Total (%)
Roof	0	0	0	0	0.0
Other Roof	0	0	0	0	0.0
Glass	-4270	0	0	-4270	67.5
Door	0	49	0	49	-0.8
Wall	0	-110	0	-110	1.7
Below-Grade Wall	0	0	0	0	0.0
Other Wall	0	0	0	0	0.0
Partition	0	-864	0	-864	13.7
Exterior Floor	0	-2	0	-2	0.0
Interior Floor	0	222	0	222	-3.5
Slab	0	0	0	0	0.0
Other Floor	0	0	0	0	0.0
Infiltration	0	0	0	0	0.0
Envelope Subtotal	-4270	-705	0	-4975	-
People	0	0	0	0	0.0
Lights	0	0	0	0	0.0
RA Sensible (Lights)	0	0	0	0	0.0
Miscellaneous Loads	0	0	0	0	0.0
Internal Subtotal	0	0	0	0	-
RA (All Other)	0	0	0	0	0.0
DOA Direct to Zone	0	0	0	0	0.0
Ceiling	0	-1354	0	-1354	21.4
Refrigeration	0	0	0	0	0.0
Service Water	0	0	0	0	0.0
HVAC Equipment Losses	0	0	0	0	0.0
Adj Air Transfer Heat	0	0	0	0	0.0
Sizing Factor Correction	0	0	0	0	0.0
Time Delay Correction	0	0	0	0	0.0
Grand Total	-4270	-2059	0	-6329	100.0

Engineering Checks

Heating Mbh	-6.33	Input Ventilation cfm	40
Heating cfm	235.14	Calculated Ventilation cfm	63
ft²/Mbh	-74.90	Number of People	2.37
cfm/Mbh	-37.16	People per 1000 ft²	5
Conditioned ft²	473.9		

ZONE_VAV-2-14

Conditions at Time of Cooling Peak

Outside	DB / WB / HR	90.7 °F	/	73.9 °F	/	99.5 gr/lb
Zone	DB / RH / HR	75.0 °F	/	52.6 %	/	68.1 gr/lb

	Instant Sensible (Btu/h)	Time Delay Sensible (Btu/h)	Latent (Btu/h)	Total (Btu/h)	Percent of Total (%)
Roof	0	0	0	0	0.0
Other Roof	0	0	0	0	0.0
Glass	2515	2190	0	4705	26.4
Door	0	0	0	0	0.0
Wall	0	-36	0	-36	-0.2
Below-Grade Wall	0	0	0	0	0.0
Other Wall	0	0	0	0	0.0
Partition	0	-780	0	-780	-4.4
Exterior Floor	0	0	0	0	0.0
Interior Floor	0	-2215	0	-2215	-12.4
Slab	0	0	0	0	0.0
Other Floor	0	0	0	0	0.0
Infiltration	0	0	0	0	0.0
Envelope Subtotal	2515	-842	0	1673	-
People	996	2157	2338	5491	30.8
Lights	593	1323	0	1916	10.7
RA Sensible (Lights)	681	0	0	681	3.8
Miscellaneous Loads	4620	5296	0	9917	55.6
Internal Subtotal	6891	8776	2338	18004	-
RA (All Other)	0	0	0	0	0.0
DOA Direct to Zone	0	0	0	0	0.0
Ceiling	0	-208	0	-208	-1.2
Refrigeration	0	0	0	0	0.0
Service Water	0	0	0	0	0.0
HVAC Equipment Losses	0	0	0	0	0.0
Adj Air Transfer Heat	0	0	0	0	0.0
Sizing Factor Correction	902	0	0	902	5.1
Time Delay Correction	0	-2533	0	-2533	-14.2
Grand Total	10308	5192	2338	17838	100.0

Engineering Checks

Cooling tons	1.49	Input Ventilation cfm	83
Cooling cfm	920.80	Calculated Ventilation cfm	132
ft²/ton	441.97	Number of People	8.69
cfm/ton	619.32	People per 1000 ft²	13
Conditioned ft²	656.9		

Conditions at Time of Heating Peak

Outside	DB / WB / HR	16.4 °F	/	12.6 °F	/	5.3 gr/lb
Zone	DB / RH / HR	70.0 °F	/	4.9 %	/	5.2 gr/lb

	Instant Sensible (Btu/h)	Time Delay Sensible (Btu/h)	Latent (Btu/h)	Total (Btu/h)	Percent of Total (%)
Roof	0	0	0	0	0.0
Other Roof	0	0	0	0	0.0
Glass	-3017	0	0	-3017	60.0
Door	0	0	0	0	0.0
Wall	0	-270	0	-270	5.4
Below-Grade Wall	0	0	0	0	0.0
Other Wall	0	0	0	0	0.0
Partition	0	70	0	70	-1.4
Exterior Floor	0	0	0	0	0.0
Interior Floor	0	-37	0	-37	0.7
Slab	0	0	0	0	0.0
Other Floor	0	0	0	0	0.0
Infiltration	0	0	0	0	0.0
Envelope Subtotal	-3017	-237	0	-3254	-
People	0	0	0	0	0.0
Lights	0	0	0	0	0.0
RA Sensible (Lights)	0	0	0	0	0.0
Miscellaneous Loads	0	0	0	0	0.0
Internal Subtotal	0	0	0	0	-
RA (All Other)	0	0	0	0	0.0
DOA Direct to Zone	0	0	0	0	0.0
Ceiling	0	-1774	0	-1774	35.3
Refrigeration	0	0	0	0	0.0
Service Water	0	0	0	0	0.0
HVAC Equipment Losses	0	0	0	0	0.0
Adj Air Transfer Heat	0	0	0	0	0.0
Sizing Factor Correction	0	0	0	0	0.0
Time Delay Correction	0	0	0	0	0.0
Grand Total	-3017	-2010	0	-5028	100.0

Engineering Checks

Heating Mbh	-5.03	Input Ventilation cfm	83
Heating cfm	276.24	Calculated Ventilation cfm	74
ft²/Mbh	-130.68	Number of People	8.69
cfm/Mbh	-54.95	People per 1000 ft²	13
Conditioned ft²	656.9		

ZONE_VAV-2-15

Conditions at Time of Cooling Peak

Outside	DB / WB / HR	90.3 °F	/	73.7 °F	/	99.5 gr/lb
Zone	DB / RH / HR	75.0 °F	/	51.1 %	/	66.1 gr/lb

	Instant Sensible (Btu/h)	Time Delay Sensible (Btu/h)	Latent (Btu/h)	Total (Btu/h)	Percent of Total (%)
Roof	0	0	0	0	0.0
Other Roof	0	0	0	0	0.0
Glass	3117	2572	0	5689	29.7
Door	0	-280	0	-280	-1.5
Wall	0	2	0	2	0.0
Below-Grade Wall	0	0	0	0	0.0
Other Wall	0	0	0	0	0.0
Partition	0	-1217	0	-1217	-6.3
Exterior Floor	0	0	0	0	0.0
Interior Floor	0	-2041	0	-2041	-10.6
Slab	0	0	0	0	0.0
Other Floor	0	0	0	0	0.0
Infiltration	0	0	0	0	0.0
Envelope Subtotal	3117	-964	0	2152	-
People	896	1974	1707	4578	23.9
Lights	824	1908	0	2732	14.2
RA Sensible (Lights)	946	0	0	946	4.9
Miscellaneous Loads	4916	5683	0	10599	55.3
Internal Subtotal	7582	9566	1707	18855	-
RA (All Other)	0	0	0	0	0.0
DOA Direct to Zone	0	0	0	0	0.0
Ceiling	0	451	0	451	2.4
Refrigeration	0	0	0	0	0.0
Service Water	0	0	0	0	0.0
HVAC Equipment Losses	0	0	0	0	0.0
Adj Air Transfer Heat	0	0	0	0	0.0
Sizing Factor Correction	0	0	0	0	0.0
Time Delay Correction	0	-2277	0	-2277	-11.9
Grand Total	10699	6776	1707	19182	100.0

Engineering Checks

Cooling tons	1.60	Input Ventilation cfm	101
Cooling cfm	1,118.61	Calculated Ventilation cfm	160
ft²/ton	604.62	Number of People	8.54
cfm/ton	699.66	People per 1000 ft²	9
Conditioned ft²	966.4		

Conditions at Time of Heating Peak

Outside	DB / WB / HR	16.4 °F	/	12.6 °F	/	5.3 gr/lb
Zone	DB / RH / HR	70.0 °F	/	4.9 %	/	5.2 gr/lb

	Instant Sensible (Btu/h)	Time Delay Sensible (Btu/h)	Latent (Btu/h)	Total (Btu/h)	Percent of Total (%)
Roof	0	0	0	0	0.0
Other Roof	0	0	0	0	0.0
Glass	-3364	0	0	-3364	54.7
Door	0	71	0	71	-1.2
Wall	0	-350	0	-350	5.7
Below-Grade Wall	0	0	0	0	0.0
Other Wall	0	0	0	0	0.0
Partition	0	325	0	325	-5.3
Exterior Floor	0	0	0	0	0.0
Interior Floor	0	-153	0	-153	2.5
Slab	0	0	0	0	0.0
Other Floor	0	0	0	0	0.0
Infiltration	0	0	0	0	0.0
Envelope Subtotal	-3364	-108	0	-3472	-
People	0	0	0	0	0.0
Lights	0	0	0	0	0.0
RA Sensible (Lights)	0	0	0	0	0.0
Miscellaneous Loads	0	0	0	0	0.0
Internal Subtotal	0	0	0	0	-
RA (All Other)	0	0	0	0	0.0
DOA Direct to Zone	0	0	0	0	0.0
Ceiling	0	-2680	0	-2680	43.6
Refrigeration	0	0	0	0	0.0
Service Water	0	0	0	0	0.0
HVAC Equipment Losses	0	0	0	0	0.0
Adj Air Transfer Heat	0	0	0	0	0.0
Sizing Factor Correction	0	0	0	0	0.0
Time Delay Correction	0	0	0	0	0.0
Grand Total	-3364	-2787	0	-6152	100.0

Engineering Checks

Heating Mbh	-6.15	Input Ventilation cfm	101
Heating cfm	335.58	Calculated Ventilation cfm	90
ft²/Mbh	-157.11	Number of People	8.54
cfm/Mbh	-54.55	People per 1000 ft²	9
Conditioned ft²	966.4		

ZONE_VAV-2-16

Conditions at Time of Cooling Peak

Outside	DB / WB / HR	87.8 °F	/	73.1 °F	/	99.5 gr/lb
Zone	DB / RH / HR	75.0 °F	/	50.7 %	/	65.5 gr/lb

	Instant Sensible (Btu/h)	Time Delay Sensible (Btu/h)	Latent (Btu/h)	Total (Btu/h)	Percent of Total (%)
Roof	0	0	0	0	0.0
Other Roof	0	0	0	0	0.0
Glass	0	0	0	0	0.0
Door	0	-18	0	-18	-0.3
Wall	0	0	0	0	0.0
Below-Grade Wall	0	0	0	0	0.0
Other Wall	0	0	0	0	0.0
Partition	0	-702	0	-702	-13.1
Exterior Floor	0	0	0	0	0.0
Interior Floor	0	-331	0	-331	-6.2
Slab	0	0	0	0	0.0
Other Floor	0	0	0	0	0.0
Infiltration	0	0	0	0	0.0
Envelope Subtotal	0	-1050	0	-1050	-
People	210	559	400	1169	21.8
Lights	296	950	0	1246	23.3
RA Sensible (Lights)	340	0	0	340	6.3
Miscellaneous Loads	1412	1941	0	3353	62.6
Internal Subtotal	2258	3450	400	6108	-
RA (All Other)	0	0	0	0	0.0
DOA Direct to Zone	0	0	0	0	0.0
Ceiling	0	304	0	304	5.7
Refrigeration	0	0	0	0	0.0
Service Water	0	0	0	0	0.0
HVAC Equipment Losses	0	0	0	0	0.0
Adj Air Transfer Heat	0	0	0	0	0.0
Sizing Factor Correction	0	0	0	0	0.0
Time Delay Correction	0	-3	0	-3	-0.1
Grand Total	2258	2701	400	5359	100.0

Engineering Checks

Cooling tons	0.45	Input Ventilation cfm	27
Cooling cfm	304.22	Calculated Ventilation cfm	44
ft²/ton	648.65	Number of People	2.00
cfm/ton	681.07	People per 1000 ft²	7
Conditioned ft²	289.7		

Conditions at Time of Heating Peak

Outside	DB / WB / HR	16.4 °F	/	12.6 °F	/	5.3 gr/lb
Zone	DB / RH / HR	70.0 °F	/	4.9 %	/	5.2 gr/lb

	Instant Sensible (Btu/h)	Time Delay Sensible (Btu/h)	Latent (Btu/h)	Total (Btu/h)	Percent of Total (%)
Roof	0	0	0	0	0.0
Other Roof	0	0	0	0	0.0
Glass	0	0	0	0	0.0
Door	0	-25	0	-25	3.4
Wall	0	0	0	0	0.0
Below-Grade Wall	0	0	0	0	0.0
Other Wall	0	0	0	0	0.0
Partition	0	-100	0	-100	13.7
Exterior Floor	0	0	0	0	0.0
Interior Floor	0	169	0	169	-23.0
Slab	0	0	0	0	0.0
Other Floor	0	0	0	0	0.0
Infiltration	0	0	0	0	0.0
Envelope Subtotal	0	43	0	43	-
People	0	0	0	0	0.0
Lights	0	0	0	0	0.0
RA Sensible (Lights)	0	0	0	0	0.0
Miscellaneous Loads	0	0	0	0	0.0
Internal Subtotal	0	0	0	0	-
RA (All Other)	0	0	0	0	0.0
DOA Direct to Zone	0	0	0	0	0.0
Ceiling	0	-777	0	-777	105.9
Refrigeration	0	0	0	0	0.0
Service Water	0	0	0	0	0.0
HVAC Equipment Losses	0	0	0	0	0.0
Adj Air Transfer Heat	0	0	0	0	0.0
Sizing Factor Correction	0	0	0	0	0.0
Time Delay Correction	0	0	0	0	0.0
Grand Total	0	-734	0	-734	100.0

Engineering Checks

Heating Mbh	-0.73	Input Ventilation cfm	27
Heating cfm	91.27	Calculated Ventilation cfm	24
ft²/Mbh	-394.89	Number of People	2.00
cfm/Mbh	-124.41	People per 1000 ft²	7
Conditioned ft²	289.7		

ZONE_VAV-2-17

Conditions at Time of Cooling Peak

Outside	DB / WB / HR	87.8 °F	/	73.1 °F	/	99.5 gr/lb
Zone	DB / RH / HR	75.0 °F	/	52.6 %	/	68.1 gr/lb

	Instant Sensible (Btu/h)	Time Delay Sensible (Btu/h)	Latent (Btu/h)	Total (Btu/h)	Percent of Total (%)
Roof	0	0	0	0	0.0
Other Roof	0	0	0	0	0.0
Glass	704	2450	0	3154	55.1
Door	0	-44	0	-44	-0.8
Wall	0	205	0	205	3.6
Below-Grade Wall	0	0	0	0	0.0
Other Wall	0	0	0	0	0.0
Partition	0	4	0	4	0.1
Exterior Floor	0	0	0	0	0.0
Interior Floor	0	-663	0	-663	-11.6
Slab	0	0	0	0	0.0
Other Floor	0	0	0	0	0.0
Infiltration	0	0	0	0	0.0
Envelope Subtotal	704	1952	0	2656	-
People	420	963	800	2183	38.1
Lights	117	320	0	437	7.6
RA Sensible (Lights)	134	0	0	134	2.3
Miscellaneous Loads	133	157	0	290	5.1
Internal Subtotal	804	1441	800	3045	-
RA (All Other)	0	0	0	0	0.0
DOA Direct to Zone	0	0	0	0	0.0
Ceiling	0	66	0	66	1.2
Refrigeration	0	0	0	0	0.0
Service Water	0	0	0	0	0.0
HVAC Equipment Losses	0	0	0	0	0.0
Adj Air Transfer Heat	0	0	0	0	0.0
Sizing Factor Correction	0	0	0	0	0.0
Time Delay Correction	0	-41	0	-41	-0.7
Grand Total	1508	3419	800	5727	100.0

Engineering Checks

Cooling tons	0.48	Input Ventilation cfm	26
Cooling cfm	291.03	Calculated Ventilation cfm	42
ft²/ton	216.31	Number of People	4.00
cfm/ton	609.68	People per 1000 ft²	39
Conditioned ft²	103.2		

Conditions at Time of Heating Peak

Outside	DB / WB / HR	16.4 °F	/	12.6 °F	/	5.3 gr/lb
Zone	DB / RH / HR	70.0 °F	/	4.9 %	/	5.2 gr/lb

	Instant Sensible (Btu/h)	Time Delay Sensible (Btu/h)	Latent (Btu/h)	Total (Btu/h)	Percent of Total (%)
Roof	0	0	0	0	0.0
Other Roof	0	0	0	0	0.0
Glass	-727	0	0	-727	50.4
Door	0	2	0	2	-0.1
Wall	0	-230	0	-230	15.9
Below-Grade Wall	0	0	0	0	0.0
Other Wall	0	0	0	0	0.0
Partition	0	-119	0	-119	8.3
Exterior Floor	0	0	0	0	0.0
Interior Floor	0	-44	0	-44	3.0
Slab	0	0	0	0	0.0
Other Floor	0	0	0	0	0.0
Infiltration	0	0	0	0	0.0
Envelope Subtotal	-727	-391	0	-1118	-
People	0	0	0	0	0.0
Lights	0	0	0	0	0.0
RA Sensible (Lights)	0	0	0	0	0.0
Miscellaneous Loads	0	0	0	0	0.0
Internal Subtotal	0	0	0	0	-
RA (All Other)	0	0	0	0	0.0
DOA Direct to Zone	0	0	0	0	0.0
Ceiling	0	-326	0	-326	22.6
Refrigeration	0	0	0	0	0.0
Service Water	0	0	0	0	0.0
HVAC Equipment Losses	0	0	0	0	0.0
Adj Air Transfer Heat	0	0	0	0	0.0
Sizing Factor Correction	0	0	0	0	0.0
Time Delay Correction	0	0	0	0	0.0
Grand Total	-727	-717	0	-1443	100.0

Engineering Checks

Heating Mbh	-1.44	Input Ventilation cfm	26
Heating cfm	87.31	Calculated Ventilation cfm	23
ft²/Mbh	-71.52	Number of People	4.00
cfm/Mbh	-60.48	People per 1000 ft²	39
Conditioned ft²	103.2		

ZONE_VAV-2-18

Conditions at Time of Cooling Peak

Outside	DB / WB / HR	88.3 °F	/	73.2 °F	/	99.5 gr/lb
Zone	DB / RH / HR	75.0 °F	/	50.7 %	/	65.6 gr/lb

	Instant Sensible (Btu/h)	Time Delay Sensible (Btu/h)	Latent (Btu/h)	Total (Btu/h)	Percent of Total (%)
Roof	0	0	0	0	0.0
Other Roof	0	0	0	0	0.0
Glass	0	0	0	0	0.0
Door	0	-38	0	-38	-0.4
Wall	0	0	0	0	0.0
Below-Grade Wall	0	0	0	0	0.0
Other Wall	0	0	0	0	0.0
Partition	0	-1211	0	-1211	-11.4
Exterior Floor	0	0	0	0	0.0
Interior Floor	0	-718	0	-718	-6.8
Slab	0	0	0	0	0.0
Other Floor	0	0	0	0	0.0
Infiltration	0	0	0	0	0.0
Envelope Subtotal	0	-1967	0	-1967	-
People	420	1067	800	2287	21.5
Lights	594	1810	0	2404	22.6
RA Sensible (Lights)	682	0	0	682	6.4
Miscellaneous Loads	2826	3694	0	6520	61.4
Internal Subtotal	4521	6571	800	11892	-
RA (All Other)	0	0	0	0	0.0
DOA Direct to Zone	0	0	0	0	0.0
Ceiling	0	706	0	706	6.6
Refrigeration	0	0	0	0	0.0
Service Water	0	0	0	0	0.0
HVAC Equipment Losses	0	0	0	0	0.0
Adj Air Transfer Heat	0	0	0	0	0.0
Sizing Factor Correction	0	0	0	0	0.0
Time Delay Correction	0	-7	0	-7	-0.1
Grand Total	4521	5304	800	10625	100.0

Engineering Checks

Cooling tons	0.89	Input Ventilation cfm	55
Cooling cfm	609.18	Calculated Ventilation cfm	77
ft²/ton	655.59	Number of People	4.00
cfm/ton	687.91	People per 1000 ft²	7
Conditioned ft²	580.4		

Conditions at Time of Heating Peak

Outside	DB / WB / HR	16.4 °F	/	12.6 °F	/	5.3 gr/lb
Zone	DB / RH / HR	70.0 °F	/	4.9 %	/	5.2 gr/lb

	Instant Sensible (Btu/h)	Time Delay Sensible (Btu/h)	Latent (Btu/h)	Total (Btu/h)	Percent of Total (%)
Roof	0	0	0	0	0.0
Other Roof	0	0	0	0	0.0
Glass	0	0	0	0	0.0
Door	0	-34	0	-34	1.9
Wall	0	0	0	0	0.0
Below-Grade Wall	0	0	0	0	0.0
Other Wall	0	0	0	0	0.0
Partition	0	-271	0	-271	14.8
Exterior Floor	0	0	0	0	0.0
Interior Floor	0	56	0	56	-3.1
Slab	0	0	0	0	0.0
Other Floor	0	0	0	0	0.0
Infiltration	0	0	0	0	0.0
Envelope Subtotal	0	-249	0	-249	-
People	0	0	0	0	0.0
Lights	0	0	0	0	0.0
RA Sensible (Lights)	0	0	0	0	0.0
Miscellaneous Loads	0	0	0	0	0.0
Internal Subtotal	0	0	0	0	-
RA (All Other)	0	0	0	0	0.0
DOA Direct to Zone	0	0	0	0	0.0
Ceiling	0	-1584	0	-1584	86.4
Refrigeration	0	0	0	0	0.0
Service Water	0	0	0	0	0.0
HVAC Equipment Losses	0	0	0	0	0.0
Adj Air Transfer Heat	0	0	0	0	0.0
Sizing Factor Correction	0	0	0	0	0.0
Time Delay Correction	0	0	0	0	0.0
Grand Total	0	-1834	0	-1834	100.0

Engineering Checks

Heating Mbh	-1.83	Input Ventilation cfm	55
Heating cfm	182.76	Calculated Ventilation cfm	52
ft²/Mbh	-316.57	Number of People	4.00
cfm/Mbh	-99.67	People per 1000 ft²	7
Conditioned ft²	580.4		

ZONE_VAV-2-19

Conditions at Time of Cooling Peak

Outside	DB / WB / HR	88.3 °F	/	73.2 °F	/	99.5 gr/lb
Zone	DB / RH / HR	75.0 °F	/	50.7 %	/	65.5 gr/lb

	Instant Sensible (Btu/h)	Time Delay Sensible (Btu/h)	Latent (Btu/h)	Total (Btu/h)	Percent of Total (%)
Roof	0	0	0	0	0.0
Other Roof	0	0	0	0	0.0
Glass	0	0	0	0	0.0
Door	0	-18	0	-18	-0.3
Wall	0	0	0	0	0.0
Below-Grade Wall	0	0	0	0	0.0
Other Wall	0	0	0	0	0.0
Partition	0	-361	0	-361	-6.6
Exterior Floor	0	0	0	0	0.0
Interior Floor	0	-387	0	-387	-7.1
Slab	0	0	0	0	0.0
Other Floor	0	0	0	0	0.0
Infiltration	0	0	0	0	0.0
Envelope Subtotal	0	-766	0	-766	-
People	210	514	400	1124	20.7
Lights	298	877	0	1174	21.6
RA Sensible (Lights)	342	0	0	342	6.3
Miscellaneous Loads	1415	1786	0	3200	58.8
Internal Subtotal	2264	3177	400	5841	-
RA (All Other)	0	0	0	0	0.0
DOA Direct to Zone	0	0	0	0	0.0
Ceiling	0	370	0	370	6.8
Refrigeration	0	0	0	0	0.0
Service Water	0	0	0	0	0.0
HVAC Equipment Losses	0	0	0	0	0.0
Adj Air Transfer Heat	0	0	0	0	0.0
Sizing Factor Correction	0	0	0	0	0.0
Time Delay Correction	0	-3	0	-3	-0.1
Grand Total	2264	2777	400	5441	100.0

Engineering Checks

Cooling tons	0.45	Input Ventilation cfm	27
Cooling cfm	305.20	Calculated Ventilation cfm	39
ft²/ton	642.19	Number of People	2.00
cfm/ton	672.95	People per 1000 ft²	7
Conditioned ft²	291.2		

Conditions at Time of Heating Peak

Outside	DB / WB / HR	16.4 °F	/	12.6 °F	/	5.3 gr/lb
Zone	DB / RH / HR	70.0 °F	/	4.9 %	/	5.2 gr/lb

	Instant Sensible (Btu/h)	Time Delay Sensible (Btu/h)	Latent (Btu/h)	Total (Btu/h)	Percent of Total (%)
Roof	0	0	0	0	0.0
Other Roof	0	0	0	0	0.0
Glass	0	0	0	0	0.0
Door	0	-17	0	-17	1.8
Wall	0	0	0	0	0.0
Below-Grade Wall	0	0	0	0	0.0
Other Wall	0	0	0	0	0.0
Partition	0	-150	0	-150	15.7
Exterior Floor	0	0	0	0	0.0
Interior Floor	0	14	0	14	-1.5
Slab	0	0	0	0	0.0
Other Floor	0	0	0	0	0.0
Infiltration	0	0	0	0	0.0
Envelope Subtotal	0	-152	0	-152	-
People	0	0	0	0	0.0
Lights	0	0	0	0	0.0
RA Sensible (Lights)	0	0	0	0	0.0
Miscellaneous Loads	0	0	0	0	0.0
Internal Subtotal	0	0	0	0	-
RA (All Other)	0	0	0	0	0.0
DOA Direct to Zone	0	0	0	0	0.0
Ceiling	0	-802	0	-802	84.0
Refrigeration	0	0	0	0	0.0
Service Water	0	0	0	0	0.0
HVAC Equipment Losses	0	0	0	0	0.0
Adj Air Transfer Heat	0	0	0	0	0.0
Sizing Factor Correction	0	0	0	0	0.0
Time Delay Correction	0	0	0	0	0.0
Grand Total	0	-955	0	-955	100.0

Engineering Checks

Heating Mbh	-0.95	Input Ventilation cfm	27
Heating cfm	91.56	Calculated Ventilation cfm	26
ft²/Mbh	-305.05	Number of People	2.00
cfm/Mbh	-95.92	People per 1000 ft²	7
Conditioned ft²	291.2		

ZONE_VAV-2-20

Conditions at Time of Cooling Peak

Outside	DB / WB / HR	87.8 °F	/	73.1 °F	/	99.5 gr/lb
Zone	DB / RH / HR	75.0 °F	/	50.5 %	/	65.3 gr/lb

	Instant Sensible (Btu/h)	Time Delay Sensible (Btu/h)	Latent (Btu/h)	Total (Btu/h)	Percent of Total (%)
Roof	0	0	0	0	0.0
Other Roof	0	0	0	0	0.0
Glass	0	0	0	0	0.0
Door	0	-16	0	-16	-0.3
Wall	0	0	0	0	0.0
Below-Grade Wall	0	0	0	0	0.0
Other Wall	0	0	0	0	0.0
Partition	0	-415	0	-415	-7.0
Exterior Floor	0	0	0	0	0.0
Interior Floor	0	-331	0	-331	-5.6
Slab	0	0	0	0	0.0
Other Floor	0	0	0	0	0.0
Infiltration	0	0	0	0	0.0
Envelope Subtotal	0	-762	0	-762	-
People	210	560	400	1170	19.8
Lights	315	1014	0	1328	22.5
RA Sensible (Lights)	361	0	0	361	6.1
Miscellaneous Loads	1449	2001	0	3450	58.5
Internal Subtotal	2334	3575	400	6309	-
RA (All Other)	0	0	0	0	0.0
DOA Direct to Zone	0	0	0	0	0.0
Ceiling	0	357	0	357	6.1
Refrigeration	0	0	0	0	0.0
Service Water	0	0	0	0	0.0
HVAC Equipment Losses	0	0	0	0	0.0
Adj Air Transfer Heat	0	0	0	0	0.0
Sizing Factor Correction	0	0	0	0	0.0
Time Delay Correction	0	-3	0	-3	-0.1
Grand Total	2334	3168	400	5902	100.0

Engineering Checks

Cooling tons	0.49	Input Ventilation cfm	28
Cooling cfm	316.17	Calculated Ventilation cfm	45
ft²/ton	625.54	Number of People	2.00
cfm/ton	642.71	People per 1000 ft²	7
Conditioned ft²	307.6		

Conditions at Time of Heating Peak

Outside	DB / WB / HR	16.4 °F	/	12.6 °F	/	5.3 gr/lb
Zone	DB / RH / HR	70.0 °F	/	4.9 %	/	5.2 gr/lb

	Instant Sensible (Btu/h)	Time Delay Sensible (Btu/h)	Latent (Btu/h)	Total (Btu/h)	Percent of Total (%)
Roof	0	0	0	0	0.0
Other Roof	0	0	0	0	0.0
Glass	0	0	0	0	0.0
Door	0	-33	0	-33	6.5
Wall	0	0	0	0	0.0
Below-Grade Wall	0	0	0	0	0.0
Other Wall	0	0	0	0	0.0
Partition	0	191	0	191	-38.1
Exterior Floor	0	0	0	0	0.0
Interior Floor	0	162	0	162	-32.4
Slab	0	0	0	0	0.0
Other Floor	0	0	0	0	0.0
Infiltration	0	0	0	0	0.0
Envelope Subtotal	0	321	0	321	-
People	0	0	0	0	0.0
Lights	0	0	0	0	0.0
RA Sensible (Lights)	0	0	0	0	0.0
Miscellaneous Loads	0	0	0	0	0.0
Internal Subtotal	0	0	0	0	-
RA (All Other)	0	0	0	0	0.0
DOA Direct to Zone	0	0	0	0	0.0
Ceiling	0	-821	0	-821	164.0
Refrigeration	0	0	0	0	0.0
Service Water	0	0	0	0	0.0
HVAC Equipment Losses	0	0	0	0	0.0
Adj Air Transfer Heat	0	0	0	0	0.0
Sizing Factor Correction	0	0	0	0	0.0
Time Delay Correction	0	0	0	0	0.0
Grand Total	0	-501	0	-501	100.0

Engineering Checks

Heating Mbh	-0.50	Input Ventilation cfm	28
Heating cfm	94.85	Calculated Ventilation cfm	25
ft²/Mbh	-614.64	Number of People	2.00
cfm/Mbh	-189.49	People per 1000 ft²	7
Conditioned ft²	307.6		

ZONE_VAV-2-21

Conditions at Time of Cooling Peak

Outside	DB / WB / HR	88.3 °F	/	73.2 °F	/	99.5 gr/lb
Zone	DB / RH / HR	75.0 °F	/	50.5 %	/	65.3 gr/lb

	Instant Sensible (Btu/h)	Time Delay Sensible (Btu/h)	Latent (Btu/h)	Total (Btu/h)	Percent of Total (%)
Roof	0	0	0	0	0.0
Other Roof	0	0	0	0	0.0
Glass	0	0	0	0	0.0
Door	0	-1	0	-1	-0.1
Wall	0	0	0	0	0.0
Below-Grade Wall	0	0	0	0	0.0
Other Wall	0	0	0	0	0.0
Partition	0	-185	0	-185	-6.4
Exterior Floor	0	0	0	0	0.0
Interior Floor	0	-183	0	-183	-6.4
Slab	0	0	0	0	0.0
Other Floor	0	0	0	0	0.0
Infiltration	0	0	0	0	0.0
Envelope Subtotal	0	-370	0	-370	-
People	105	267	200	572	19.9
Lights	152	465	0	617	21.5
RA Sensible (Lights)	174	0	0	174	6.1
Miscellaneous Loads	713	938	0	1651	57.5
Internal Subtotal	1144	1670	200	3014	-
RA (All Other)	0	0	0	0	0.0
DOA Direct to Zone	0	0	0	0	0.0
Ceiling	0	228	0	228	7.9
Refrigeration	0	0	0	0	0.0
Service Water	0	0	0	0	0.0
HVAC Equipment Losses	0	0	0	0	0.0
Adj Air Transfer Heat	0	0	0	0	0.0
Sizing Factor Correction	0	0	0	0	0.0
Time Delay Correction	0	-2	0	-2	-0.1
Grand Total	1144	1526	200	2870	100.0

Engineering Checks

Cooling tons	0.24	Input Ventilation cfm	14
Cooling cfm	154.44	Calculated Ventilation cfm	22
ft²/ton	620.18	Number of People	1.00
cfm/ton	645.54	People per 1000 ft²	7
Conditioned ft²	148.3		

Conditions at Time of Heating Peak

Outside	DB / WB / HR	16.4 °F	/	12.6 °F	/	5.3 gr/lb
Zone	DB / RH / HR	70.0 °F	/	4.9 %	/	5.2 gr/lb

	Instant Sensible (Btu/h)	Time Delay Sensible (Btu/h)	Latent (Btu/h)	Total (Btu/h)	Percent of Total (%)
Roof	0	0	0	0	0.0
Other Roof	0	0	0	0	0.0
Glass	0	0	0	0	0.0
Door	0	-11	0	-11	2.6
Wall	0	0	0	0	0.0
Below-Grade Wall	0	0	0	0	0.0
Other Wall	0	0	0	0	0.0
Partition	0	-44	0	-44	10.4
Exterior Floor	0	0	0	0	0.0
Interior Floor	0	37	0	37	-8.6
Slab	0	0	0	0	0.0
Other Floor	0	0	0	0	0.0
Infiltration	0	0	0	0	0.0
Envelope Subtotal	0	-19	0	-19	-
People	0	0	0	0	0.0
Lights	0	0	0	0	0.0
RA Sensible (Lights)	0	0	0	0	0.0
Miscellaneous Loads	0	0	0	0	0.0
Internal Subtotal	0	0	0	0	-
RA (All Other)	0	0	0	0	0.0
DOA Direct to Zone	0	0	0	0	0.0
Ceiling	0	-407	0	-407	95.6
Refrigeration	0	0	0	0	0.0
Service Water	0	0	0	0	0.0
HVAC Equipment Losses	0	0	0	0	0.0
Adj Air Transfer Heat	0	0	0	0	0.0
Sizing Factor Correction	0	0	0	0	0.0
Time Delay Correction	0	0	0	0	0.0
Grand Total	0	-425	0	-425	100.0

Engineering Checks

Heating Mbh	-0.43	Input Ventilation cfm	14
Heating cfm	46.33	Calculated Ventilation cfm	12
ft²/Mbh	-348.76	Number of People	1.00
cfm/Mbh	-108.93	People per 1000 ft²	7
Conditioned ft²	148.3		

ZONE_VAV-2-22

Conditions at Time of Cooling Peak

Outside	DB / WB / HR	88.3 °F	/	73.2 °F	/	99.5 gr/lb
Zone	DB / RH / HR	75.0 °F	/	48.8 %	/	63.1 gr/lb

	Instant Sensible (Btu/h)	Time Delay Sensible (Btu/h)	Latent (Btu/h)	Total (Btu/h)	Percent of Total (%)
Roof	0	0	0	0	0.0
Other Roof	0	0	0	0	0.0
Glass	940	201	0	1141	8.2
Door	0	53	0	53	0.4
Wall	0	0	0	0	0.0
Below-Grade Wall	0	0	0	0	0.0
Other Wall	0	0	0	0	0.0
Partition	0	1011	0	1011	7.3
Exterior Floor	0	0	0	0	0.0
Interior Floor	0	-109	0	-109	-0.8
Slab	0	0	0	0	0.0
Other Floor	0	0	0	0	0.0
Infiltration	0	0	0	0	0.0
Envelope Subtotal	940	1156	0	2096	-
People	51	129	81	261	1.9
Lights	1317	3372	0	4689	33.8
RA Sensible (Lights)	1513	0	0	1513	10.9
Miscellaneous Loads	673	807	0	1481	10.7
Internal Subtotal	3554	4308	81	7943	-
RA (All Other)	0	0	0	0	0.0
DOA Direct to Zone	0	0	0	0	0.0
Ceiling	0	4225	0	4225	30.5
Refrigeration	0	0	0	0	0.0
Service Water	0	0	0	0	0.0
HVAC Equipment Losses	0	0	0	0	0.0
Adj Air Transfer Heat	0	0	0	0	0.0
Sizing Factor Correction	0	0	0	0	0.0
Time Delay Correction	0	-398	0	-398	-2.9
Grand Total	4494	9291	81	13867	100.0

Engineering Checks

Cooling tons	1.16	Input Ventilation cfm	50
Cooling cfm	684.75	Calculated Ventilation cfm	98
ft²/ton	1635.03	Number of People	0.52
cfm/ton	592.47	People per 1000 ft²	0
Conditioned ft²	1889.2		

Conditions at Time of Heating Peak

Outside	DB / WB / HR	16.4 °F	/	12.6 °F	/	5.3 gr/lb
Zone	DB / RH / HR	70.0 °F	/	4.9 %	/	5.2 gr/lb

	Instant Sensible (Btu/h)	Time Delay Sensible (Btu/h)	Latent (Btu/h)	Total (Btu/h)	Percent of Total (%)
Roof	0	0	0	0	0.0
Other Roof	0	0	0	0	0.0
Glass	-311	0	0	-311	5.6
Door	0	-46	0	-46	0.8
Wall	0	0	0	0	0.0
Below-Grade Wall	0	0	0	0	0.0
Other Wall	0	0	0	0	0.0
Partition	0	-576	0	-576	10.4
Exterior Floor	0	0	0	0	0.0
Interior Floor	0	329	0	329	-6.0
Slab	0	0	0	0	0.0
Other Floor	0	0	0	0	0.0
Infiltration	0	0	0	0	0.0
Envelope Subtotal	-311	-293	0	-604	-
People	0	0	0	0	0.0
Lights	0	0	0	0	0.0
RA Sensible (Lights)	0	0	0	0	0.0
Miscellaneous Loads	0	0	0	0	0.0
Internal Subtotal	0	0	0	0	-
RA (All Other)	0	0	0	0	0.0
DOA Direct to Zone	0	0	0	0	0.0
Ceiling	0	-4925	0	-4925	89.1
Refrigeration	0	0	0	0	0.0
Service Water	0	0	0	0	0.0
HVAC Equipment Losses	0	0	0	0	0.0
Adj Air Transfer Heat	0	0	0	0	0.0
Sizing Factor Correction	0	0	0	0	0.0
Time Delay Correction	0	0	0	0	0.0
Grand Total	-311	-5218	0	-5529	100.0

Engineering Checks

Heating Mbh	-5.53	Input Ventilation cfm	50
Heating cfm	205.43	Calculated Ventilation cfm	55
ft²/Mbh	-341.72	Number of People	0.52
cfm/Mbh	-37.15	People per 1000 ft²	0
Conditioned ft²	1889.2		

ZONE_VAV-2-23

Conditions at Time of Cooling Peak

Outside	DB / WB / HR	88.3 °F	/	73.2 °F	/	99.5 gr/lb
Zone	DB / RH / HR	75.0 °F	/	50.7 %	/	65.6 gr/lb

	Instant Sensible (Btu/h)	Time Delay Sensible (Btu/h)	Latent (Btu/h)	Total (Btu/h)	Percent of Total (%)
Roof	0	0	0	0	0.0
Other Roof	0	0	0	0	0.0
Glass	0	0	0	0	0.0
Door	0	-1	0	-1	0.0
Wall	0	0	0	0	0.0
Below-Grade Wall	0	0	0	0	0.0
Other Wall	0	0	0	0	0.0
Partition	0	-518	0	-518	-15.7
Exterior Floor	0	0	0	0	0.0
Interior Floor	0	-222	0	-222	-6.7
Slab	0	0	0	0	0.0
Other Floor	0	0	0	0	0.0
Infiltration	0	0	0	0	0.0
Envelope Subtotal	0	-742	0	-742	-
People	130	362	248	740	22.4
Lights	193	651	0	844	25.6
RA Sensible (Lights)	222	0	0	222	6.7
Miscellaneous Loads	808	1166	0	1974	59.8
Internal Subtotal	1353	2179	248	3780	-
RA (All Other)	0	0	0	0	0.0
DOA Direct to Zone	0	0	0	0	0.0
Ceiling	0	267	0	267	8.1
Refrigeration	0	0	0	0	0.0
Service Water	0	0	0	0	0.0
HVAC Equipment Losses	0	0	0	0	0.0
Adj Air Transfer Heat	0	0	0	0	0.0
Sizing Factor Correction	0	0	0	0	0.0
Time Delay Correction	0	-2	0	-2	-0.1
Grand Total	1353	1702	248	3303	100.0

Engineering Checks

Cooling tons	0.28	Input Ventilation cfm	18
Cooling cfm	198.52	Calculated Ventilation cfm	25
ft²/ton	707.13	Number of People	1.24
cfm/ton	721.14	People per 1000 ft²	6
Conditioned ft²	194.6		

Conditions at Time of Heating Peak

Outside	DB / WB / HR	16.4 °F	/	12.6 °F	/	5.3 gr/lb
Zone	DB / RH / HR	70.0 °F	/	4.9 %	/	5.2 gr/lb

	Instant Sensible (Btu/h)	Time Delay Sensible (Btu/h)	Latent (Btu/h)	Total (Btu/h)	Percent of Total (%)
Roof	0	0	0	0	0.0
Other Roof	0	0	0	0	0.0
Glass	0	0	0	0	0.0
Door	0	-21	0	-21	3.1
Wall	0	0	0	0	0.0
Below-Grade Wall	0	0	0	0	0.0
Other Wall	0	0	0	0	0.0
Partition	0	-119	0	-119	17.9
Exterior Floor	0	0	0	0	0.0
Interior Floor	0	23	0	23	-3.4
Slab	0	0	0	0	0.0
Other Floor	0	0	0	0	0.0
Infiltration	0	0	0	0	0.0
Envelope Subtotal	0	-117	0	-117	-
People	0	0	0	0	0.0
Lights	0	0	0	0	0.0
RA Sensible (Lights)	0	0	0	0	0.0
Miscellaneous Loads	0	0	0	0	0.0
Internal Subtotal	0	0	0	0	-
RA (All Other)	0	0	0	0	0.0
DOA Direct to Zone	0	0	0	0	0.0
Ceiling	0	-546	0	-546	82.4
Refrigeration	0	0	0	0	0.0
Service Water	0	0	0	0	0.0
HVAC Equipment Losses	0	0	0	0	0.0
Adj Air Transfer Heat	0	0	0	0	0.0
Sizing Factor Correction	0	0	0	0	0.0
Time Delay Correction	0	0	0	0	0.0
Grand Total	0	-663	0	-663	100.0

Engineering Checks

Heating Mbh	-0.66	Input Ventilation cfm	18
Heating cfm	59.56	Calculated Ventilation cfm	17
ft²/Mbh	-293.49	Number of People	1.24
cfm/Mbh	-89.81	People per 1000 ft²	6
Conditioned ft²	194.6		

ZONE_VAV-2-24

Conditions at Time of Cooling Peak

Outside	DB / WB / HR	88.3 °F	/	73.2 °F	/	99.5 gr/lb
Zone	DB / RH / HR	75.0 °F	/	50.7 %	/	65.6 gr/lb

	Instant Sensible (Btu/h)	Time Delay Sensible (Btu/h)	Latent (Btu/h)	Total (Btu/h)	Percent of Total (%)
Roof	0	0	0	0	0.0
Other Roof	0	0	0	0	0.0
Glass	0	0	0	0	0.0
Door	0	-18	0	-18	-0.3
Wall	0	0	0	0	0.0
Below-Grade Wall	0	0	0	0	0.0
Other Wall	0	0	0	0	0.0
Partition	0	-511	0	-511	-9.6
Exterior Floor	0	0	0	0	0.0
Interior Floor	0	-340	0	-340	-6.4
Slab	0	0	0	0	0.0
Other Floor	0	0	0	0	0.0
Infiltration	0	0	0	0	0.0
Envelope Subtotal	0	-869	0	-869	-
People	210	518	400	1127	21.3
Lights	293	867	0	1159	21.9
RA Sensible (Lights)	336	0	0	336	6.3
Miscellaneous Loads	1405	1783	0	3188	60.1
Internal Subtotal	2243	3167	400	5810	-
RA (All Other)	0	0	0	0	0.0
DOA Direct to Zone	0	0	0	0	0.0
Ceiling	0	363	0	363	6.9
Refrigeration	0	0	0	0	0.0
Service Water	0	0	0	0	0.0
HVAC Equipment Losses	0	0	0	0	0.0
Adj Air Transfer Heat	0	0	0	0	0.0
Sizing Factor Correction	0	0	0	0	0.0
Time Delay Correction	0	-3	0	-3	-0.1
Grand Total	2243	2659	400	5302	100.0

Engineering Checks

Cooling tons	0.44	Input Ventilation cfm	27
Cooling cfm	301.85	Calculated Ventilation cfm	38
ft²/ton	647.66	Number of People	2.00
cfm/ton	683.10	People per 1000 ft²	7
Conditioned ft²	286.1		

Conditions at Time of Heating Peak

Outside	DB / WB / HR	16.4 °F	/	12.6 °F	/	5.3 gr/lb
Zone	DB / RH / HR	70.0 °F	/	4.9 %	/	5.2 gr/lb

	Instant Sensible (Btu/h)	Time Delay Sensible (Btu/h)	Latent (Btu/h)	Total (Btu/h)	Percent of Total (%)
Roof	0	0	0	0	0.0
Other Roof	0	0	0	0	0.0
Glass	0	0	0	0	0.0
Door	0	-20	0	-20	2.7
Wall	0	0	0	0	0.0
Below-Grade Wall	0	0	0	0	0.0
Other Wall	0	0	0	0	0.0
Partition	0	39	0	39	-5.3
Exterior Floor	0	0	0	0	0.0
Interior Floor	0	38	0	38	-5.2
Slab	0	0	0	0	0.0
Other Floor	0	0	0	0	0.0
Infiltration	0	0	0	0	0.0
Envelope Subtotal	0	57	0	57	-
People	0	0	0	0	0.0
Lights	0	0	0	0	0.0
RA Sensible (Lights)	0	0	0	0	0.0
Miscellaneous Loads	0	0	0	0	0.0
Internal Subtotal	0	0	0	0	-
RA (All Other)	0	0	0	0	0.0
DOA Direct to Zone	0	0	0	0	0.0
Ceiling	0	-793	0	-793	107.8
Refrigeration	0	0	0	0	0.0
Service Water	0	0	0	0	0.0
HVAC Equipment Losses	0	0	0	0	0.0
Adj Air Transfer Heat	0	0	0	0	0.0
Sizing Factor Correction	0	0	0	0	0.0
Time Delay Correction	0	0	0	0	0.0
Grand Total	0	-736	0	-736	100.0

Engineering Checks

Heating Mbh	-0.74	Input Ventilation cfm	27
Heating cfm	90.55	Calculated Ventilation cfm	26
ft²/Mbh	-389.03	Number of People	2.00
cfm/Mbh	-123.12	People per 1000 ft²	7
Conditioned ft²	286.1		

ZONE_VAV-2-25

Conditions at Time of Cooling Peak

Outside	DB / WB / HR	87.1 °F	/	72.9 °F	/	99.5 gr/lb
Zone	DB / RH / HR	81.0 °F	/	39.9 %	/	62.8 gr/lb

	Instant Sensible (Btu/h)	Time Delay Sensible (Btu/h)	Latent (Btu/h)	Total (Btu/h)	Percent of Total (%)
Roof	0	0	0	0	0.0
Other Roof	0	0	0	0	0.0
Glass	0	0	0	0	0.0
Door	0	-22	0	-22	-2.8
Wall	0	0	0	0	0.0
Below-Grade Wall	0	0	0	0	0.0
Other Wall	0	0	0	0	0.0
Partition	0	-252	0	-252	-31.4
Exterior Floor	0	0	0	0	0.0
Interior Floor	0	-90	0	-90	-11.3
Slab	0	0	0	0	0.0
Other Floor	0	0	0	0	0.0
Infiltration	0	0	0	0	0.0
Envelope Subtotal	0	-365	0	-365	-
People	0	0	0	0	0.0
Lights	93	212	0	304	38.0
RA Sensible (Lights)	106	0	0	106	13.3
Miscellaneous Loads	206	202	0	407	50.9
Internal Subtotal	405	413	0	818	-
RA (All Other)	0	0	0	0	0.0
DOA Direct to Zone	0	0	0	0	0.0
Ceiling	0	254	0	254	31.7
Refrigeration	0	0	0	0	0.0
Service Water	0	0	0	0	0.0
HVAC Equipment Losses	0	0	0	0	0.0
Adj Air Transfer Heat	0	0	0	0	0.0
Sizing Factor Correction	94	0	0	94	11.7
Time Delay Correction	0	0	0	0	0.0
Grand Total	499	303	0	801	100.0

Engineering Checks

Cooling tons	0.07	Input Ventilation cfm	10
Cooling cfm	106.36	Calculated Ventilation cfm	15
ft²/ton	2389.93	Number of People	0.00
cfm/ton	1,592.94	People per 1000 ft²	0
Conditioned ft²	159.5		

Conditions at Time of Heating Peak

Outside	DB / WB / HR	16.4 °F	/	12.6 °F	/	5.3 gr/lb
Zone	DB / RH / HR	70.0 °F	/	4.9 %	/	5.2 gr/lb

	Instant Sensible (Btu/h)	Time Delay Sensible (Btu/h)	Latent (Btu/h)	Total (Btu/h)	Percent of Total (%)
Roof	0	0	0	0	0.0
Other Roof	0	0	0	0	0.0
Glass	0	0	0	0	0.0
Door	0	-2	0	-2	0.6
Wall	0	0	0	0	0.0
Below-Grade Wall	0	0	0	0	0.0
Other Wall	0	0	0	0	0.0
Partition	0	-54	0	-54	13.9
Exterior Floor	0	0	0	0	0.0
Interior Floor	0	90	0	90	-23.3
Slab	0	0	0	0	0.0
Other Floor	0	0	0	0	0.0
Infiltration	0	0	0	0	0.0
Envelope Subtotal	0	34	0	34	-
People	0	0	0	0	0.0
Lights	0	0	0	0	0.0
RA Sensible (Lights)	0	0	0	0	0.0
Miscellaneous Loads	0	0	0	0	0.0
Internal Subtotal	0	0	0	0	-
RA (All Other)	0	0	0	0	0.0
DOA Direct to Zone	0	0	0	0	0.0
Ceiling	0	-421	0	-421	108.9
Refrigeration	0	0	0	0	0.0
Service Water	0	0	0	0	0.0
HVAC Equipment Losses	0	0	0	0	0.0
Adj Air Transfer Heat	0	0	0	0	0.0
Sizing Factor Correction	0	0	0	0	0.0
Time Delay Correction	0	0	0	0	0.0
Grand Total	0	-387	0	-387	100.0

Engineering Checks

Heating Mbh	-0.39	Input Ventilation cfm	10
Heating cfm	31.91	Calculated Ventilation cfm	9
ft²/Mbh	-412.56	Number of People	0.00
cfm/Mbh	-82.51	People per 1000 ft²	0
Conditioned ft²	159.5		

ZONE_VAV-2-26

Conditions at Time of Cooling Peak

Outside	DB / WB / HR	88.9 °F	/	73.4 °F	/	99.5 gr/lb
Zone	DB / RH / HR	75.0 °F	/	63.7 %	/	82.5 gr/lb

	Instant Sensible (Btu/h)	Time Delay Sensible (Btu/h)	Latent (Btu/h)	Total (Btu/h)	Percent of Total (%)
Roof	0	0	0	0	0.0
Other Roof	0	0	0	0	0.0
Glass	0	0	0	0	0.0
Door	0	-70	0	-70	-0.6
Wall	0	0	0	0	0.0
Below-Grade Wall	0	0	0	0	0.0
Other Wall	0	0	0	0	0.0
Partition	0	-1980	0	-1980	-16.5
Exterior Floor	0	0	0	0	0.0
Interior Floor	0	-1124	0	-1124	-9.4
Slab	0	0	0	0	0.0
Other Floor	0	0	0	0	0.0
Infiltration	0	0	0	0	0.0
Envelope Subtotal	0	-3174	0	-3174	-
People	2351	5797	4477	12625	105.5
Lights	355	1082	0	1437	12.0
RA Sensible (Lights)	408	0	0	408	3.4
Miscellaneous Loads	404	528	0	932	7.8
Internal Subtotal	3518	7406	4477	15402	-
RA (All Other)	0	0	0	0	0.0
DOA Direct to Zone	0	0	0	0	0.0
Ceiling	0	-220	0	-220	-1.8
Refrigeration	0	0	0	0	0.0
Service Water	0	0	0	0	0.0
HVAC Equipment Losses	0	0	0	0	0.0
Adj Air Transfer Heat	0	0	0	0	0.0
Sizing Factor Correction	0	0	0	0	0.0
Time Delay Correction	0	-36	0	-36	-0.3
Grand Total	3518	3976	4477	11972	100.0

Engineering Checks

Cooling tons	1.00	Input Ventilation cfm	131
Cooling cfm	1,453.00	Calculated Ventilation cfm	208
ft²/ton	314.22	Number of People	22.40
cfm/ton	1,456.17	People per 1000 ft²	71
Conditioned ft²	313.4		

Conditions at Time of Heating Peak

Outside	DB / WB / HR	16.4 °F	/	12.6 °F	/	5.3 gr/lb
Zone	DB / RH / HR	70.0 °F	/	4.9 %	/	5.2 gr/lb

	Instant Sensible (Btu/h)	Time Delay Sensible (Btu/h)	Latent (Btu/h)	Total (Btu/h)	Percent of Total (%)
Roof	0	0	0	0	0.0
Other Roof	0	0	0	0	0.0
Glass	0	0	0	0	0.0
Door	0	0	0	0	0.0
Wall	0	0	0	0	0.0
Below-Grade Wall	0	0	0	0	0.0
Other Wall	0	0	0	0	0.0
Partition	0	-90	0	-90	12.1
Exterior Floor	0	0	0	0	0.0
Interior Floor	0	176	0	176	-23.7
Slab	0	0	0	0	0.0
Other Floor	0	0	0	0	0.0
Infiltration	0	0	0	0	0.0
Envelope Subtotal	0	86	0	86	-
People	0	0	0	0	0.0
Lights	0	0	0	0	0.0
RA Sensible (Lights)	0	0	0	0	0.0
Miscellaneous Loads	0	0	0	0	0.0
Internal Subtotal	0	0	0	0	-
RA (All Other)	0	0	0	0	0.0
DOA Direct to Zone	0	0	0	0	0.0
Ceiling	0	-831	0	-831	111.6
Refrigeration	0	0	0	0	0.0
Service Water	0	0	0	0	0.0
HVAC Equipment Losses	0	0	0	0	0.0
Adj Air Transfer Heat	0	0	0	0	0.0
Sizing Factor Correction	0	0	0	0	0.0
Time Delay Correction	0	0	0	0	0.0
Grand Total	0	-745	0	-745	100.0

Engineering Checks

Heating Mbh	-0.74	Input Ventilation cfm	131
Heating cfm	435.90	Calculated Ventilation cfm	117
ft²/Mbh	-421.00	Number of People	22.40
cfm/Mbh	-585.42	People per 1000 ft²	71
Conditioned ft²	313.4		

ZONE_VAV-2-27

Conditions at Time of Cooling Peak

Outside	DB / WB / HR	88.9 °F	/	73.4 °F	/	99.5 gr/lb
Zone	DB / RH / HR	74.9 °F	/	62.0 %	/	80.2 gr/lb

	Instant Sensible (Btu/h)	Time Delay Sensible (Btu/h)	Latent (Btu/h)	Total (Btu/h)	Percent of Total (%)
Roof	0	0	0	0	0.0
Other Roof	0	0	0	0	0.0
Glass	212	382	0	594	5.2
Door	0	0	0	0	0.0
Wall	0	0	0	0	0.0
Below-Grade Wall	0	0	0	0	0.0
Other Wall	0	0	0	0	0.0
Partition	0	-2798	0	-2798	-24.3
Exterior Floor	0	0	0	0	0.0
Interior Floor	0	-1095	0	-1095	-9.5
Slab	0	0	0	0	0.0
Other Floor	0	0	0	0	0.0
Infiltration	0	0	0	0	0.0
Envelope Subtotal	212	-3511	0	-3299	-
People	1070	2963	2547	6579	57.1
Lights	93	296	0	389	3.4
RA Sensible (Lights)	107	0	0	107	0.9
Miscellaneous Loads	3222	4516	1541	9279	80.6
Internal Subtotal	4492	7775	4087	16354	-
RA (All Other)	0	0	0	0	0.0
DOA Direct to Zone	0	0	0	0	0.0
Ceiling	0	-846	0	-846	-7.3
Refrigeration	0	0	0	0	0.0
Service Water	0	0	0	0	0.0
HVAC Equipment Losses	0	0	0	0	0.0
Adj Air Transfer Heat	0	0	0	0	0.0
Sizing Factor Correction	0	0	0	0	0.0
Time Delay Correction	0	-693	0	-693	-6.0
Grand Total	4704	2725	4087	11516	100.0

Engineering Checks

Cooling tons	0.96	Input Ventilation cfm	63
Cooling cfm	699.83	Calculated Ventilation cfm	100
ft²/ton	144.82	Number of People	9.29
cfm/ton	729.10	People per 1000 ft²	67
Conditioned ft²	139.0		

Conditions at Time of Heating Peak

Outside	DB / WB / HR	16.4 °F	/	12.6 °F	/	5.3 gr/lb
Zone	DB / RH / HR	70.0 °F	/	4.9 %	/	5.2 gr/lb

	Instant Sensible (Btu/h)	Time Delay Sensible (Btu/h)	Latent (Btu/h)	Total (Btu/h)	Percent of Total (%)
Roof	0	0	0	0	0.0
Other Roof	0	0	0	0	0.0
Glass	-135	0	0	-135	27.3
Door	0	0	0	0	0.0
Wall	0	0	0	0	0.0
Below-Grade Wall	0	0	0	0	0.0
Other Wall	0	0	0	0	0.0
Partition	0	18	0	18	-3.6
Exterior Floor	0	0	0	0	0.0
Interior Floor	0	7	0	7	-1.3
Slab	0	0	0	0	0.0
Other Floor	0	0	0	0	0.0
Infiltration	0	0	0	0	0.0
Envelope Subtotal	-135	24	0	-110	-
People	0	0	0	0	0.0
Lights	0	0	0	0	0.0
RA Sensible (Lights)	0	0	0	0	0.0
Miscellaneous Loads	0	0	0	0	0.0
Internal Subtotal	0	0	0	0	-
RA (All Other)	0	0	0	0	0.0
DOA Direct to Zone	0	0	0	0	0.0
Ceiling	0	-383	0	-383	77.6
Refrigeration	0	0	0	0	0.0
Service Water	0	0	0	0	0.0
HVAC Equipment Losses	0	0	0	0	0.0
Adj Air Transfer Heat	0	0	0	0	0.0
Sizing Factor Correction	0	0	0	0	0.0
Time Delay Correction	0	0	0	0	0.0
Grand Total	-135	-359	0	-494	100.0

Engineering Checks

Heating Mbh	-0.49	Input Ventilation cfm	63
Heating cfm	209.95	Calculated Ventilation cfm	56
ft²/Mbh	-281.52	Number of People	9.29
cfm/Mbh	-425.29	People per 1000 ft²	67
Conditioned ft²	139.0		

ZONE_VAV-2-28

Conditions at Time of Cooling Peak

Outside	DB / WB / HR	87.8 °F	/	73.1 °F	/	99.5 gr/lb
Zone	DB / RH / HR	75.0 °F	/	50.6 %	/	65.4 gr/lb

	Instant Sensible (Btu/h)	Time Delay Sensible (Btu/h)	Latent (Btu/h)	Total (Btu/h)	Percent of Total (%)
Roof	0	0	0	0	0.0
Other Roof	0	0	0	0	0.0
Glass	0	0	0	0	0.0
Door	0	31	0	31	0.3
Wall	0	0	0	0	0.0
Below-Grade Wall	0	0	0	0	0.0
Other Wall	0	0	0	0	0.0
Partition	0	-747	0	-747	-6.7
Exterior Floor	0	0	0	0	0.0
Interior Floor	0	-663	0	-663	-5.9
Slab	0	0	0	0	0.0
Other Floor	0	0	0	0	0.0
Infiltration	0	0	0	0	0.0
Envelope Subtotal	0	-1379	0	-1379	-
People	420	1095	800	2315	20.6
Lights	580	1805	0	2385	21.2
RA Sensible (Lights)	666	0	0	666	5.9
Miscellaneous Loads	2799	3732	0	6531	58.2
Internal Subtotal	4465	6632	800	11897	-
RA (All Other)	0	0	0	0	0.0
DOA Direct to Zone	0	0	0	0	0.0
Ceiling	0	718	0	718	6.4
Refrigeration	0	0	0	0	0.0
Service Water	0	0	0	0	0.0
HVAC Equipment Losses	0	0	0	0	0.0
Adj Air Transfer Heat	0	0	0	0	0.0
Sizing Factor Correction	0	0	0	0	0.0
Time Delay Correction	0	-7	0	-7	-0.1
Grand Total	4465	5965	800	11230	100.0

Engineering Checks

Cooling tons	0.94	Input Ventilation cfm	54
Cooling cfm	600.33	Calculated Ventilation cfm	86
ft²/ton	606.11	Number of People	4.00
cfm/ton	641.38	People per 1000 ft²	7
Conditioned ft²	567.2		

Conditions at Time of Heating Peak

Outside	DB / WB / HR	16.4 °F	/	12.6 °F	/	5.3 gr/lb
Zone	DB / RH / HR	70.0 °F	/	4.9 %	/	5.2 gr/lb

	Instant Sensible (Btu/h)	Time Delay Sensible (Btu/h)	Latent (Btu/h)	Total (Btu/h)	Percent of Total (%)
Roof	0	0	0	0	0.0
Other Roof	0	0	0	0	0.0
Glass	0	0	0	0	0.0
Door	0	-58	0	-58	3.2
Wall	0	0	0	0	0.0
Below-Grade Wall	0	0	0	0	0.0
Other Wall	0	0	0	0	0.0
Partition	0	-321	0	-321	17.7
Exterior Floor	0	0	0	0	0.0
Interior Floor	0	111	0	111	-6.1
Slab	0	0	0	0	0.0
Other Floor	0	0	0	0	0.0
Infiltration	0	0	0	0	0.0
Envelope Subtotal	0	-267	0	-267	-
People	0	0	0	0	0.0
Lights	0	0	0	0	0.0
RA Sensible (Lights)	0	0	0	0	0.0
Miscellaneous Loads	0	0	0	0	0.0
Internal Subtotal	0	0	0	0	-
RA (All Other)	0	0	0	0	0.0
DOA Direct to Zone	0	0	0	0	0.0
Ceiling	0	-1549	0	-1549	85.3
Refrigeration	0	0	0	0	0.0
Service Water	0	0	0	0	0.0
HVAC Equipment Losses	0	0	0	0	0.0
Adj Air Transfer Heat	0	0	0	0	0.0
Sizing Factor Correction	0	0	0	0	0.0
Time Delay Correction	0	0	0	0	0.0
Grand Total	0	-1816	0	-1816	100.0

Engineering Checks

Heating Mbh	-1.82	Input Ventilation cfm	54
Heating cfm	180.10	Calculated Ventilation cfm	48
ft²/Mbh	-312.27	Number of People	4.00
cfm/Mbh	-99.15	People per 1000 ft²	7
Conditioned ft²	567.2		

ZONE_VAV-2-29

Conditions at Time of Cooling Peak

Outside	DB / WB / HR	89.4 °F	/	73.5 °F	/	99.5 gr/lb
Zone	DB / RH / HR	75.0 °F	/	50.5 %	/	65.3 gr/lb

	Instant Sensible (Btu/h)	Time Delay Sensible (Btu/h)	Latent (Btu/h)	Total (Btu/h)	Percent of Total (%)
Roof	0	0	0	0	0.0
Other Roof	0	0	0	0	0.0
Glass	0	0	0	0	0.0
Door	0	-10	0	-10	-0.3
Wall	0	0	0	0	0.0
Below-Grade Wall	0	0	0	0	0.0
Other Wall	0	0	0	0	0.0
Partition	0	-167	0	-167	-5.7
Exterior Floor	0	0	0	0	0.0
Interior Floor	0	-190	0	-190	-6.5
Slab	0	0	0	0	0.0
Other Floor	0	0	0	0	0.0
Infiltration	0	0	0	0	0.0
Envelope Subtotal	0	-367	0	-367	-
People	105	262	200	567	19.5
Lights	155	469	0	625	21.5
RA Sensible (Lights)	178	0	0	178	6.1
Miscellaneous Loads	720	934	0	1654	56.9
Internal Subtotal	1158	1665	200	3023	-
RA (All Other)	0	0	0	0	0.0
DOA Direct to Zone	0	0	0	0	0.0
Ceiling	0	252	0	252	8.7
Refrigeration	0	0	0	0	0.0
Service Water	0	0	0	0	0.0
HVAC Equipment Losses	0	0	0	0	0.0
Adj Air Transfer Heat	0	0	0	0	0.0
Sizing Factor Correction	0	0	0	0	0.0
Time Delay Correction	0	-2	0	-2	-0.1
Grand Total	1158	1549	200	2907	100.0

Engineering Checks

Cooling tons	0.24	Input Ventilation cfm	14
Cooling cfm	156.71	Calculated Ventilation cfm	20
ft²/ton	626.59	Number of People	1.00
cfm/ton	646.81	People per 1000 ft²	7
Conditioned ft²	151.8		

Conditions at Time of Heating Peak

Outside	DB / WB / HR	16.4 °F	/	12.6 °F	/	5.3 gr/lb
Zone	DB / RH / HR	70.0 °F	/	4.9 %	/	5.2 gr/lb

	Instant Sensible (Btu/h)	Time Delay Sensible (Btu/h)	Latent (Btu/h)	Total (Btu/h)	Percent of Total (%)
Roof	0	0	0	0	0.0
Other Roof	0	0	0	0	0.0
Glass	0	0	0	0	0.0
Door	0	-7	0	-7	1.4
Wall	0	0	0	0	0.0
Below-Grade Wall	0	0	0	0	0.0
Other Wall	0	0	0	0	0.0
Partition	0	-90	0	-90	17.3
Exterior Floor	0	0	0	0	0.0
Interior Floor	0	15	0	15	-2.9
Slab	0	0	0	0	0.0
Other Floor	0	0	0	0	0.0
Infiltration	0	0	0	0	0.0
Envelope Subtotal	0	-82	0	-82	-
People	0	0	0	0	0.0
Lights	0	0	0	0	0.0
RA Sensible (Lights)	0	0	0	0	0.0
Miscellaneous Loads	0	0	0	0	0.0
Internal Subtotal	0	0	0	0	-
RA (All Other)	0	0	0	0	0.0
DOA Direct to Zone	0	0	0	0	0.0
Ceiling	0	-437	0	-437	84.2
Refrigeration	0	0	0	0	0.0
Service Water	0	0	0	0	0.0
HVAC Equipment Losses	0	0	0	0	0.0
Adj Air Transfer Heat	0	0	0	0	0.0
Sizing Factor Correction	0	0	0	0	0.0
Time Delay Correction	0	0	0	0	0.0
Grand Total	0	-519	0	-519	100.0

Engineering Checks

Heating Mbh	-0.52	Input Ventilation cfm	14
Heating cfm	47.01	Calculated Ventilation cfm	13
ft²/Mbh	-292.29	Number of People	1.00
cfm/Mbh	-90.53	People per 1000 ft²	7
Conditioned ft²	151.8		

ZONE_VAV-2-30

Conditions at Time of Cooling Peak

Outside	DB / WB / HR	80.4 °F	/	70.9 °F	/	99.4 gr/lb
Zone	DB / RH / HR	75.0 °F	/	51.3 %	/	66.4 gr/lb

	Instant Sensible (Btu/h)	Time Delay Sensible (Btu/h)	Latent (Btu/h)	Total (Btu/h)	Percent of Total (%)
Roof	0	0	0	0	0.0
Other Roof	0	0	0	0	0.0
Glass	3924	8961	0	12885	57.4
Door	0	-98	0	-98	-0.4
Wall	0	334	0	334	1.5
Below-Grade Wall	0	0	0	0	0.0
Other Wall	0	0	0	0	0.0
Partition	0	-842	0	-842	-3.7
Exterior Floor	0	0	0	0	0.0
Interior Floor	0	-3939	0	-3939	-17.5
Slab	0	0	0	0	0.0
Other Floor	0	0	0	0	0.0
Infiltration	0	0	0	0	0.0
Envelope Subtotal	3924	4416	0	8340	-
People	924	1678	2199	4802	21.4
Lights	747	1678	0	2425	10.8
RA Sensible (Lights)	858	0	0	858	3.8
Miscellaneous Loads	4593	5176	0	9768	43.5
Internal Subtotal	7122	8532	2199	17853	-
RA (All Other)	0	0	0	0	0.0
DOA Direct to Zone	0	0	0	0	0.0
Ceiling	0	-1593	0	-1593	-7.1
Refrigeration	0	0	0	0	0.0
Service Water	0	0	0	0	0.0
HVAC Equipment Losses	0	0	0	0	0.0
Adj Air Transfer Heat	0	0	0	0	0.0
Sizing Factor Correction	0	0	0	0	0.0
Time Delay Correction	0	-2135	0	-2135	-9.5
Grand Total	11046	9220	2199	22465	100.0

Engineering Checks

Cooling tons	1.87	Input Ventilation cfm	95
Cooling cfm	1,055.90	Calculated Ventilation cfm	151
ft²/ton	489.97	Number of People	8.00
cfm/ton	563.90	People per 1000 ft²	9
Conditioned ft²	917.2		

Conditions at Time of Heating Peak

Outside	DB / WB / HR	16.4 °F	/	12.6 °F	/	5.3 gr/lb
Zone	DB / RH / HR	70.0 °F	/	4.9 %	/	5.2 gr/lb

	Instant Sensible (Btu/h)	Time Delay Sensible (Btu/h)	Latent (Btu/h)	Total (Btu/h)	Percent of Total (%)
Roof	0	0	0	0	0.0
Other Roof	0	0	0	0	0.0
Glass	-3336	0	0	-3336	57.6
Door	0	86	0	86	-1.5
Wall	0	-447	0	-447	7.7
Below-Grade Wall	0	0	0	0	0.0
Other Wall	0	0	0	0	0.0
Partition	0	700	0	700	-12.1
Exterior Floor	0	0	0	0	0.0
Interior Floor	0	-256	0	-256	4.4
Slab	0	0	0	0	0.0
Other Floor	0	0	0	0	0.0
Infiltration	0	0	0	0	0.0
Envelope Subtotal	-3336	83	0	-3253	-
People	0	0	0	0	0.0
Lights	0	0	0	0	0.0
RA Sensible (Lights)	0	0	0	0	0.0
Miscellaneous Loads	0	0	0	0	0.0
Internal Subtotal	0	0	0	0	-
RA (All Other)	0	0	0	0	0.0
DOA Direct to Zone	0	0	0	0	0.0
Ceiling	0	-2538	0	-2538	43.8
Refrigeration	0	0	0	0	0.0
Service Water	0	0	0	0	0.0
HVAC Equipment Losses	0	0	0	0	0.0
Adj Air Transfer Heat	0	0	0	0	0.0
Sizing Factor Correction	0	0	0	0	0.0
Time Delay Correction	0	0	0	0	0.0
Grand Total	-3336	-2455	0	-5790	100.0

Engineering Checks

Heating Mbh	-5.79	Input Ventilation cfm	95
Heating cfm	316.77	Calculated Ventilation cfm	85
ft²/Mbh	-158.42	Number of People	8.00
cfm/Mbh	-54.71	People per 1000 ft²	9
Conditioned ft²	917.2		

ZONE_VAV-2-31

Conditions at Time of Cooling Peak

Outside	DB / WB / HR	78.6 °F	/	69.9 °F	/	96.5 gr/lb
Zone	DB / RH / HR	75.0 °F	/	50.3 %	/	65.0 gr/lb

	Instant Sensible (Btu/h)	Time Delay Sensible (Btu/h)	Latent (Btu/h)	Total (Btu/h)	Percent of Total (%)
Roof	0	0	0	0	0.0
Other Roof	0	0	0	0	0.0
Glass	690	4440	0	5131	118.2
Door	0	0	0	0	0.0
Wall	0	-5	0	-5	-0.1
Below-Grade Wall	0	0	0	0	0.0
Other Wall	0	0	0	0	0.0
Partition	0	-1072	0	-1072	-24.7
Exterior Floor	0	0	0	0	0.0
Interior Floor	0	-1234	0	-1234	-28.4
Slab	0	0	0	0	0.0
Other Floor	0	0	0	0	0.0
Infiltration	0	0	0	0	0.0
Envelope Subtotal	690	2130	0	2820	-
People	142	276	271	689	15.9
Lights	64	179	0	243	5.6
RA Sensible (Lights)	73	0	0	73	1.7
Miscellaneous Loads	554	752	0	1307	30.1
Internal Subtotal	834	1207	271	2312	-
RA (All Other)	0	0	0	0	0.0
DOA Direct to Zone	0	0	0	0	0.0
Ceiling	0	-540	0	-540	-12.4
Refrigeration	0	0	0	0	0.0
Service Water	0	0	0	0	0.0
HVAC Equipment Losses	0	0	0	0	0.0
Adj Air Transfer Heat	0	0	0	0	0.0
Sizing Factor Correction	0	0	0	0	0.0
Time Delay Correction	0	-250	0	-250	-5.8
Grand Total	1524	2546	271	4341	100.0

Engineering Checks

Cooling tons	0.36	Input Ventilation cfm	11
Cooling cfm	182.93	Calculated Ventilation cfm	23
ft²/ton	195.80	Number of People	1.35
cfm/ton	505.57	People per 1000 ft²	19
Conditioned ft²	70.8		

Conditions at Time of Heating Peak

Outside	DB / WB / HR	16.4 °F	/	12.6 °F	/	5.3 gr/lb
Zone	DB / RH / HR	70.0 °F	/	4.9 %	/	5.2 gr/lb

	Instant Sensible (Btu/h)	Time Delay Sensible (Btu/h)	Latent (Btu/h)	Total (Btu/h)	Percent of Total (%)
Roof	0	0	0	0	0.0
Other Roof	0	0	0	0	0.0
Glass	-793	0	0	-793	70.5
Door	0	0	0	0	0.0
Wall	0	-126	0	-126	11.2
Below-Grade Wall	0	0	0	0	0.0
Other Wall	0	0	0	0	0.0
Partition	0	71	0	71	-6.3
Exterior Floor	0	0	0	0	0.0
Interior Floor	0	-32	0	-32	2.8
Slab	0	0	0	0	0.0
Other Floor	0	0	0	0	0.0
Infiltration	0	0	0	0	0.0
Envelope Subtotal	-793	-86	0	-879	-
People	0	0	0	0	0.0
Lights	0	0	0	0	0.0
RA Sensible (Lights)	0	0	0	0	0.0
Miscellaneous Loads	0	0	0	0	0.0
Internal Subtotal	0	0	0	0	-
RA (All Other)	0	0	0	0	0.0
DOA Direct to Zone	0	0	0	0	0.0
Ceiling	0	-245	0	-245	21.8
Refrigeration	0	0	0	0	0.0
Service Water	0	0	0	0	0.0
HVAC Equipment Losses	0	0	0	0	0.0
Adj Air Transfer Heat	0	0	0	0	0.0
Sizing Factor Correction	0	0	0	0	0.0
Time Delay Correction	0	0	0	0	0.0
Grand Total	-793	-332	0	-1124	100.0

Engineering Checks

Heating Mbh	-1.12	Input Ventilation cfm	11
Heating cfm	54.88	Calculated Ventilation cfm	16
ft²/Mbh	-62.99	Number of People	1.35
cfm/Mbh	-48.81	People per 1000 ft²	19
Conditioned ft²	70.8		

ZONE_Zone 00-22

Conditions at Time of Cooling Peak

Outside	DB / WB / HR	84.2 °F	/	68.6 °F	/	80.3 gr/lb
Zone	DB / RH / HR	81.0 °F	/	39.9 %	/	62.8 gr/lb

	Instant Sensible (Btu/h)	Time Delay Sensible (Btu/h)	Latent (Btu/h)	Total (Btu/h)	Percent of Total (%)
Roof	0	0	0	0	0.0
Other Roof	0	0	0	0	0.0
Glass	1295	884	0	2180	87.0
Door	0	0	0	0	0.0
Wall	0	330	0	330	13.2
Below-Grade Wall	0	0	0	0	0.0
Other Wall	0	0	0	0	0.0
Partition	0	-173	0	-173	-6.9
Exterior Floor	0	0	0	0	0.0
Interior Floor	0	0	0	0	0.0
Slab	0	-451	0	-451	-18.0
Other Floor	0	0	0	0	0.0
Infiltration	0	0	0	0	0.0
Envelope Subtotal	1295	589	0	1885	-
People	0	0	0	0	0.0
Lights	64	87	0	152	6.1
RA Sensible (Lights)	74	0	0	74	3.0
Miscellaneous Loads	215	126	0	341	13.6
Internal Subtotal	353	213	0	566	-
RA (All Other)	0	0	0	0	0.0
DOA Direct to Zone	0	0	0	0	0.0
Ceiling	0	-112	0	-112	-4.5
Refrigeration	0	0	0	0	0.0
Service Water	0	0	0	0	0.0
HVAC Equipment Losses	0	0	0	0	0.0
Adj Air Transfer Heat	0	0	0	0	0.0
Sizing Factor Correction	171	0	0	171	6.8
Time Delay Correction	0	-5	0	-5	-0.2
Grand Total	1819	686	0	2505	100.0

Engineering Checks

Cooling tons	0.21	Input Ventilation cfm	86
Cooling cfm	85.56	Calculated Ventilation cfm	0
ft²/ton	797.72	Number of People	0.00
cfm/ton	409.75	People per 1000 ft²	0
Conditioned ft²	166.5		

Conditions at Time of Heating Peak

Outside	DB / WB / HR	16.4 °F	/	12.6 °F	/	5.3 gr/lb
Zone	DB / RH / HR	70.0 °F	/	4.9 %	/	5.2 gr/lb

	Instant Sensible (Btu/h)	Time Delay Sensible (Btu/h)	Latent (Btu/h)	Total (Btu/h)	Percent of Total (%)
Roof	0	0	0	0	0.0
Other Roof	0	0	0	0	0.0
Glass	-1363	0	0	-1363	72.6
Door	0	0	0	0	0.0
Wall	0	-455	0	-455	24.3
Below-Grade Wall	0	0	0	0	0.0
Other Wall	0	0	0	0	0.0
Partition	0	127	0	127	-6.8
Exterior Floor	0	0	0	0	0.0
Interior Floor	0	0	0	0	0.0
Slab	0	-1	0	-1	0.1
Other Floor	0	0	0	0	0.0
Infiltration	0	0	0	0	0.0
Envelope Subtotal	-1363	-330	0	-1693	-
People	0	0	0	0	0.0
Lights	0	0	0	0	0.0
RA Sensible (Lights)	0	0	0	0	0.0
Miscellaneous Loads	0	0	0	0	0.0
Internal Subtotal	0	0	0	0	-
RA (All Other)	0	0	0	0	0.0
DOA Direct to Zone	0	0	0	0	0.0
Ceiling	0	-185	0	-185	9.9
Refrigeration	0	0	0	0	0.0
Service Water	0	0	0	0	0.0
HVAC Equipment Losses	0	0	0	0	0.0
Adj Air Transfer Heat	0	0	0	0	0.0
Sizing Factor Correction	0	0	0	0	0.0
Time Delay Correction	0	0	0	0	0.0
Grand Total	-1363	-515	0	-1878	100.0

Engineering Checks

Heating Mbh	-1.88	Input Ventilation cfm	86
Heating cfm	85.56	Calculated Ventilation cfm	0
ft²/Mbh	-88.68	Number of People	0.00
cfm/Mbh	-45.56	People per 1000 ft²	0
Conditioned ft²	166.5		

ZONE_Zone 00-23

Conditions at Time of Cooling Peak

Outside	DB / WB / HR	74.0 °F	/	62.2 °F	/	65.2 gr/lb
Zone	DB / RH / HR	81.0 °F	/	39.9 %	/	62.8 gr/lb

	Instant Sensible (Btu/h)	Time Delay Sensible (Btu/h)	Latent (Btu/h)	Total (Btu/h)	Percent of Total (%)
Roof	0	0	0	0	0.0
Other Roof	0	0	0	0	0.0
Glass	2632	3845	0	6477	133.7
Door	0	-97	0	-97	-2.0
Wall	0	46	0	46	1.0
Below-Grade Wall	0	0	0	0	0.0
Other Wall	0	0	0	0	0.0
Partition	0	-656	0	-656	-13.5
Exterior Floor	0	0	0	0	0.0
Interior Floor	0	0	0	0	0.0
Slab	0	-945	0	-945	-19.5
Other Floor	0	0	0	0	0.0
Infiltration	0	0	0	0	0.0
Envelope Subtotal	2632	2193	0	4825	-
People	0	0	0	0	0.0
Lights	113	162	0	275	5.7
RA Sensible (Lights)	130	0	0	130	2.7
Miscellaneous Loads	0	0	0	0	0.0
Internal Subtotal	243	162	0	405	-
RA (All Other)	0	0	0	0	0.0
DOA Direct to Zone	0	0	0	0	0.0
Ceiling	0	-378	0	-378	-7.8
Refrigeration	0	0	0	0	0.0
Service Water	0	0	0	0	0.0
HVAC Equipment Losses	0	0	0	0	0.0
Adj Air Transfer Heat	0	0	0	0	0.0
Sizing Factor Correction	0	0	0	0	0.0
Time Delay Correction	0	-6	0	-6	-0.1
Grand Total	2874	1971	0	4846	100.0

Engineering Checks

Cooling tons	0.40	Input Ventilation cfm	0
Cooling cfm	0.00	Calculated Ventilation cfm	0
ft²/ton	460.40	Number of People	0.00
cfm/ton	0.00	People per 1000 ft²	0
Conditioned ft²	185.9		

Conditions at Time of Heating Peak

Outside	DB / WB / HR	16.4 °F	/	12.6 °F	/	5.3 gr/lb
Zone	DB / RH / HR	70.0 °F	/	4.9 %	/	5.2 gr/lb

	Instant Sensible (Btu/h)	Time Delay Sensible (Btu/h)	Latent (Btu/h)	Total (Btu/h)	Percent of Total (%)
Roof	0	0	0	0	0.0
Other Roof	0	0	0	0	0.0
Glass	-2806	0	0	-2806	123.8
Door	0	32	0	32	-1.4
Wall	0	-42	0	-42	1.8
Below-Grade Wall	0	0	0	0	0.0
Other Wall	0	0	0	0	0.0
Partition	0	620	0	620	-27.4
Exterior Floor	0	0	0	0	0.0
Interior Floor	0	0	0	0	0.0
Slab	0	-1	0	-1	0.0
Other Floor	0	0	0	0	0.0
Infiltration	0	0	0	0	0.0
Envelope Subtotal	-2806	610	0	-2196	-
People	0	0	0	0	0.0
Lights	0	0	0	0	0.0
RA Sensible (Lights)	0	0	0	0	0.0
Miscellaneous Loads	0	0	0	0	0.0
Internal Subtotal	0	0	0	0	-
RA (All Other)	0	0	0	0	0.0
DOA Direct to Zone	0	0	0	0	0.0
Ceiling	0	-70	0	-70	3.1
Refrigeration	0	0	0	0	0.0
Service Water	0	0	0	0	0.0
HVAC Equipment Losses	0	0	0	0	0.0
Adj Air Transfer Heat	0	0	0	0	0.0
Sizing Factor Correction	0	0	0	0	0.0
Time Delay Correction	0	0	0	0	0.0
Grand Total	-2806	539	0	-2266	100.0

Engineering Checks

Heating Mbh	-2.27	Input Ventilation cfm	0
Heating cfm	84.20	Calculated Ventilation cfm	0
ft²/Mbh	-82.04	Number of People	0.00
cfm/Mbh	-37.15	People per 1000 ft²	0
Conditioned ft²	185.9		

ZONE_Zone 00-24

Conditions at Time of Cooling Peak

Outside	DB / WB / HR	81.3 °F	/	67.7 °F	/	80.2 gr/lb
Zone	DB / RH / HR	81.0 °F	/	39.9 %	/	62.8 gr/lb

	Instant Sensible (Btu/h)	Time Delay Sensible (Btu/h)	Latent (Btu/h)	Total (Btu/h)	Percent of Total (%)
Roof	0	0	0	0	0.0
Other Roof	0	0	0	0	0.0
Glass	733	1132	0	1865	34.7
Door	0	0	0	0	0.0
Wall	0	254	0	254	4.7
Below-Grade Wall	0	0	0	0	0.0
Other Wall	0	0	0	0	0.0
Partition	0	-493	0	-493	-9.2
Exterior Floor	0	0	0	0	0.0
Interior Floor	0	0	0	0	0.0
Slab	0	-332	0	-332	-6.2
Other Floor	0	0	0	0	0.0
Infiltration	0	0	0	0	0.0
Envelope Subtotal	733	560	0	1294	-
People	0	0	0	0	0.0
Lights	83	121	0	204	3.8
RA Sensible (Lights)	95	0	0	95	1.8
Miscellaneous Loads	2502	1588	0	4090	76.2
Internal Subtotal	2679	1709	0	4388	-
RA (All Other)	0	0	0	0	0.0
DOA Direct to Zone	0	0	0	0	0.0
Ceiling	0	-268	0	-268	-5.0
Refrigeration	0	0	0	0	0.0
Service Water	0	0	0	0	0.0
HVAC Equipment Losses	0	0	0	0	0.0
Adj Air Transfer Heat	0	0	0	0	0.0
Sizing Factor Correction	0	0	0	0	0.0
Time Delay Correction	0	-46	0	-46	-0.9
Grand Total	3412	1955	0	5367	100.0

Engineering Checks

Cooling tons	0.45	Input Ventilation cfm	186
Cooling cfm	185.55	Calculated Ventilation cfm	0
ft²/ton	477.01	Number of People	0.00
cfm/ton	414.75	People per 1000 ft²	0
Conditioned ft²	213.3		

Conditions at Time of Heating Peak

Outside	DB / WB / HR	32.0 °F	/	32.0 °F	/	0.0 gr/lb
Zone	DB / RH / HR	32.0 °F	/	0.0 %	/	0.0 gr/lb

	Instant Sensible (Btu/h)	Time Delay Sensible (Btu/h)	Latent (Btu/h)	Total (Btu/h)	Percent of Total (%)
Roof	0	0	0	0	0.0
Other Roof	0	0	0	0	0.0
Glass	0	0	0	0	0.0
Door	0	0	0	0	0.0
Wall	0	0	0	0	0.0
Below-Grade Wall	0	0	0	0	0.0
Other Wall	0	0	0	0	0.0
Partition	0	0	0	0	0.0
Exterior Floor	0	0	0	0	0.0
Interior Floor	0	0	0	0	0.0
Slab	0	0	0	0	0.0
Other Floor	0	0	0	0	0.0
Infiltration	0	0	0	0	0.0
Envelope Subtotal	0	0	0	0	-
People	0	0	0	0	0.0
Lights	0	0	0	0	0.0
RA Sensible (Lights)	0	0	0	0	0.0
Miscellaneous Loads	0	0	0	0	0.0
Internal Subtotal	0	0	0	0	-
RA (All Other)	0	0	0	0	0.0
DOA Direct to Zone	0	0	0	0	0.0
Ceiling	0	0	0	0	0.0
Refrigeration	0	0	0	0	0.0
Service Water	0	0	0	0	0.0
HVAC Equipment Losses	0	0	0	0	0.0
Adj Air Transfer Heat	0	0	0	0	0.0
Sizing Factor Correction	0	0	0	0	0.0
Time Delay Correction	0	0	0	0	0.0
Grand Total	0	0	0	0	100.0

Engineering Checks

Heating Mbh	0.00	Input Ventilation cfm	186
Heating cfm	185.55	Calculated Ventilation cfm	0
ft²/Mbh	0.00	Number of People	0.00
cfm/Mbh	0.00	People per 1000 ft²	0
Conditioned ft²	213.3		

ZONE_Zone 00-25

Conditions at Time of Cooling Peak

Outside	DB / WB / HR	80.4 °F	/	70.9 °F	/	99.4 gr/lb
Zone	DB / RH / HR	81.0 °F	/	39.9 %	/	62.8 gr/lb

	Instant Sensible (Btu/h)	Time Delay Sensible (Btu/h)	Latent (Btu/h)	Total (Btu/h)	Percent of Total (%)
Roof	0	0	0	0	0.0
Other Roof	0	0	0	0	0.0
Glass	5883	10060	0	15943	147.3
Door	0	-62	0	-62	-0.6
Wall	0	95	0	95	0.9
Below-Grade Wall	0	0	0	0	0.0
Other Wall	0	0	0	0	0.0
Partition	0	-2444	0	-2444	-22.6
Exterior Floor	0	0	0	0	0.0
Interior Floor	0	0	0	0	0.0
Slab	0	-972	0	-972	-9.0
Other Floor	0	0	0	0	0.0
Infiltration	0	0	0	0	0.0
Envelope Subtotal	5883	6676	0	12560	-
People	0	0	0	0	0.0
Lights	144	183	0	327	3.0
RA Sensible (Lights)	165	0	0	165	1.5
Miscellaneous Loads	0	0	0	0	0.0
Internal Subtotal	309	183	0	492	-
RA (All Other)	0	0	0	0	0.0
DOA Direct to Zone	0	0	0	0	0.0
Ceiling	0	-2213	0	-2213	-20.4
Refrigeration	0	0	0	0	0.0
Service Water	0	0	0	0	0.0
HVAC Equipment Losses	0	0	0	0	0.0
Adj Air Transfer Heat	0	0	0	0	0.0
Sizing Factor Correction	0	0	0	0	0.0
Time Delay Correction	0	-14	0	-14	-0.1
Grand Total	6192	4633	0	10826	100.0

Engineering Checks

Cooling tons	0.90	Input Ventilation cfm	375
Cooling cfm	375.15	Calculated Ventilation cfm	0
ft²/ton	251.06	Number of People	0.00
cfm/ton	415.76	People per 1000 ft²	0
Conditioned ft²	226.5		

Conditions at Time of Heating Peak

Outside	DB / WB / HR	16.4 °F	/	12.6 °F	/	5.3 gr/lb
Zone	DB / RH / HR	70.0 °F	/	4.9 %	/	5.2 gr/lb

	Instant Sensible (Btu/h)	Time Delay Sensible (Btu/h)	Latent (Btu/h)	Total (Btu/h)	Percent of Total (%)
Roof	0	0	0	0	0.0
Other Roof	0	0	0	0	0.0
Glass	-7354	0	0	-7354	112.5
Door	0	26	0	26	-0.4
Wall	0	-78	0	-78	1.2
Below-Grade Wall	0	0	0	0	0.0
Other Wall	0	0	0	0	0.0
Partition	0	657	0	657	-10.0
Exterior Floor	0	0	0	0	0.0
Interior Floor	0	0	0	0	0.0
Slab	0	-1	0	-1	0.0
Other Floor	0	0	0	0	0.0
Infiltration	0	0	0	0	0.0
Envelope Subtotal	-7354	603	0	-6751	-
People	0	0	0	0	0.0
Lights	0	0	0	0	0.0
RA Sensible (Lights)	0	0	0	0	0.0
Miscellaneous Loads	0	0	0	0	0.0
Internal Subtotal	0	0	0	0	-
RA (All Other)	0	0	0	0	0.0
DOA Direct to Zone	0	0	0	0	0.0
Ceiling	0	214	0	214	-3.3
Refrigeration	0	0	0	0	0.0
Service Water	0	0	0	0	0.0
HVAC Equipment Losses	0	0	0	0	0.0
Adj Air Transfer Heat	0	0	0	0	0.0
Sizing Factor Correction	0	0	0	0	0.0
Time Delay Correction	0	0	0	0	0.0
Grand Total	-7354	817	0	-6537	100.0

Engineering Checks

Heating Mbh	-6.54	Input Ventilation cfm	375
Heating cfm	375.15	Calculated Ventilation cfm	0
ft²/Mbh	-34.65	Number of People	0.00
cfm/Mbh	-57.39	People per 1000 ft²	0
Conditioned ft²	226.5		

ZONE_Zone 00-26

Conditions at Time of Cooling Peak

Outside	DB / WB / HR	87.8 °F	/	73.1 °F	/	99.5 gr/lb
Zone	DB / RH / HR	81.0 °F	/	39.9 %	/	62.8 gr/lb

	Instant Sensible (Btu/h)	Time Delay Sensible (Btu/h)	Latent (Btu/h)	Total (Btu/h)	Percent of Total (%)
Roof	0	0	0	0	0.0
Other Roof	0	0	0	0	0.0
Glass	6832	9208	0	16041	124.0
Door	0	-60	0	-60	-0.5
Wall	0	107	0	107	0.8
Below-Grade Wall	0	0	0	0	0.0
Other Wall	0	0	0	0	0.0
Partition	0	-2409	0	-2409	-18.6
Exterior Floor	0	0	0	0	0.0
Interior Floor	0	0	0	0	0.0
Slab	0	32	0	32	0.2
Other Floor	0	0	0	0	0.0
Infiltration	0	0	0	0	0.0
Envelope Subtotal	6832	6878	0	13710	-
People	0	0	0	0	0.0
Lights	144	209	0	353	2.7
RA Sensible (Lights)	165	0	0	165	1.3
Miscellaneous Loads	0	0	0	0	0.0
Internal Subtotal	309	209	0	518	-
RA (All Other)	0	0	0	0	0.0
DOA Direct to Zone	0	0	0	0	0.0
Ceiling	0	-1278	0	-1278	-9.9
Refrigeration	0	0	0	0	0.0
Service Water	0	0	0	0	0.0
HVAC Equipment Losses	0	0	0	0	0.0
Adj Air Transfer Heat	0	0	0	0	0.0
Sizing Factor Correction	0	0	0	0	0.0
Time Delay Correction	0	-13	0	-13	-0.1
Grand Total	7142	5796	0	12938	100.0

Engineering Checks

Cooling tons	1.08	Input Ventilation cfm	449
Cooling cfm	449.48	Calculated Ventilation cfm	0
ft²/ton	210.17	Number of People	0.00
cfm/ton	416.81	People per 1000 ft²	0
Conditioned ft²	226.6		

Conditions at Time of Heating Peak

Outside	DB / WB / HR	16.4 °F	/	12.6 °F	/	5.3 gr/lb
Zone	DB / RH / HR	70.0 °F	/	4.9 %	/	5.2 gr/lb

	Instant Sensible (Btu/h)	Time Delay Sensible (Btu/h)	Latent (Btu/h)	Total (Btu/h)	Percent of Total (%)
Roof	0	0	0	0	0.0
Other Roof	0	0	0	0	0.0
Glass	-7660	0	0	-7660	110.0
Door	0	39	0	39	-0.6
Wall	0	-67	0	-67	1.0
Below-Grade Wall	0	0	0	0	0.0
Other Wall	0	0	0	0	0.0
Partition	0	867	0	867	-12.4
Exterior Floor	0	0	0	0	0.0
Interior Floor	0	0	0	0	0.0
Slab	0	-1	0	-1	0.0
Other Floor	0	0	0	0	0.0
Infiltration	0	0	0	0	0.0
Envelope Subtotal	-7660	838	0	-6822	-
People	0	0	0	0	0.0
Lights	0	0	0	0	0.0
RA Sensible (Lights)	0	0	0	0	0.0
Miscellaneous Loads	0	0	0	0	0.0
Internal Subtotal	0	0	0	0	-
RA (All Other)	0	0	0	0	0.0
DOA Direct to Zone	0	0	0	0	0.0
Ceiling	0	-141	0	-141	2.0
Refrigeration	0	0	0	0	0.0
Service Water	0	0	0	0	0.0
HVAC Equipment Losses	0	0	0	0	0.0
Adj Air Transfer Heat	0	0	0	0	0.0
Sizing Factor Correction	0	0	0	0	0.0
Time Delay Correction	0	0	0	0	0.0
Grand Total	-7660	697	0	-6963	100.0

Engineering Checks

Heating Mbh	-6.96	Input Ventilation cfm	449
Heating cfm	449.48	Calculated Ventilation cfm	0
ft²/Mbh	-32.54	Number of People	0.00
cfm/Mbh	-64.55	People per 1000 ft²	0
Conditioned ft²	226.6		

ZONE_Zone 00-27

Conditions at Time of Cooling Peak

Outside	DB / WB / HR	82.5 °F	/	71.6 °F	/	99.4 gr/lb
Zone	DB / RH / HR	81.0 °F	/	39.9 %	/	62.8 gr/lb

	Instant Sensible (Btu/h)	Time Delay Sensible (Btu/h)	Latent (Btu/h)	Total (Btu/h)	Percent of Total (%)
Roof	0	0	0	0	0.0
Other Roof	0	0	0	0	0.0
Glass	0	0	0	0	0.0
Door	0	8	0	8	1.5
Wall	0	0	0	0	0.0
Below-Grade Wall	0	0	0	0	0.0
Other Wall	0	0	0	0	0.0
Partition	0	108	0	108	21.1
Exterior Floor	0	0	0	0	0.0
Interior Floor	0	0	0	0	0.0
Slab	0	-24	0	-24	-4.7
Other Floor	0	0	0	0	0.0
Infiltration	0	0	0	0	0.0
Envelope Subtotal	0	92	0	92	-
People	0	0	0	0	0.0
Lights	47	66	0	113	22.0
RA Sensible (Lights)	54	0	0	54	10.5
Miscellaneous Loads	156	94	0	250	48.8
Internal Subtotal	256	160	0	416	-
RA (All Other)	0	0	0	0	0.0
DOA Direct to Zone	0	0	0	0	0.0
Ceiling	0	4	0	4	0.8
Refrigeration	0	0	0	0	0.0
Service Water	0	0	0	0	0.0
HVAC Equipment Losses	0	0	0	0	0.0
Adj Air Transfer Heat	0	0	0	0	0.0
Sizing Factor Correction	0	0	0	0	0.0
Time Delay Correction	0	0	0	0	0.0
Grand Total	256	256	0	512	100.0

Engineering Checks

Cooling tons	0.04	Input Ventilation cfm	16
Cooling cfm	16.14	Calculated Ventilation cfm	0
ft²/ton	2827.25	Number of People	0.00
cfm/ton	378.00	People per 1000 ft²	0
Conditioned ft²	120.7		

Conditions at Time of Heating Peak

Outside	DB / WB / HR	32.0 °F	/	32.0 °F	/	0.0 gr/lb
Zone	DB / RH / HR	32.0 °F	/	0.0 %	/	0.0 gr/lb

	Instant Sensible (Btu/h)	Time Delay Sensible (Btu/h)	Latent (Btu/h)	Total (Btu/h)	Percent of Total (%)
Roof	0	0	0	0	0.0
Other Roof	0	0	0	0	0.0
Glass	0	0	0	0	0.0
Door	0	0	0	0	0.0
Wall	0	0	0	0	0.0
Below-Grade Wall	0	0	0	0	0.0
Other Wall	0	0	0	0	0.0
Partition	0	0	0	0	0.0
Exterior Floor	0	0	0	0	0.0
Interior Floor	0	0	0	0	0.0
Slab	0	0	0	0	0.0
Other Floor	0	0	0	0	0.0
Infiltration	0	0	0	0	0.0
Envelope Subtotal	0	0	0	0	-
People	0	0	0	0	0.0
Lights	0	0	0	0	0.0
RA Sensible (Lights)	0	0	0	0	0.0
Miscellaneous Loads	0	0	0	0	0.0
Internal Subtotal	0	0	0	0	-
RA (All Other)	0	0	0	0	0.0
DOA Direct to Zone	0	0	0	0	0.0
Ceiling	0	0	0	0	0.0
Refrigeration	0	0	0	0	0.0
Service Water	0	0	0	0	0.0
HVAC Equipment Losses	0	0	0	0	0.0
Adj Air Transfer Heat	0	0	0	0	0.0
Sizing Factor Correction	0	0	0	0	0.0
Time Delay Correction	0	0	0	0	0.0
Grand Total	0	0	0	0	100.0

Engineering Checks

Heating Mbh	0.00	Input Ventilation cfm	16
Heating cfm	16.14	Calculated Ventilation cfm	0
ft²/Mbh	0.00	Number of People	0.00
cfm/Mbh	0.00	People per 1000 ft²	0
Conditioned ft²	120.7		

ZONE_Zone 00-28

Conditions at Time of Cooling Peak

Outside	DB / WB / HR	82.5 °F	/	71.6 °F	/	99.4 gr/lb
Zone	DB / RH / HR	81.0 °F	/	39.9 %	/	62.8 gr/lb

	Instant Sensible (Btu/h)	Time Delay Sensible (Btu/h)	Latent (Btu/h)	Total (Btu/h)	Percent of Total (%)
Roof	0	0	0	0	0.0
Other Roof	0	0	0	0	0.0
Glass	0	0	0	0	0.0
Door	0	-27	0	-27	-0.8
Wall	0	0	0	0	0.0
Below-Grade Wall	0	0	0	0	0.0
Other Wall	0	0	0	0	0.0
Partition	0	-744	0	-744	-21.1
Exterior Floor	0	0	0	0	0.0
Interior Floor	0	0	0	0	0.0
Slab	0	-28	0	-28	-0.8
Other Floor	0	0	0	0	0.0
Infiltration	0	0	0	0	0.0
Envelope Subtotal	0	-799	0	-799	-
People	0	0	0	0	0.0
Lights	44	84	0	127	3.6
RA Sensible (Lights)	50	0	0	50	1.4
Miscellaneous Loads	2372	1959	0	4331	122.7
Internal Subtotal	2465	2043	0	4508	-
RA (All Other)	0	0	0	0	0.0
DOA Direct to Zone	0	0	0	0	0.0
Ceiling	0	-181	0	-181	-5.1
Refrigeration	0	0	0	0	0.0
Service Water	0	0	0	0	0.0
HVAC Equipment Losses	0	0	0	0	0.0
Adj Air Transfer Heat	0	0	0	0	0.0
Sizing Factor Correction	0	0	0	0	0.0
Time Delay Correction	0	0	0	0	0.0
Grand Total	2465	1063	0	3529	100.0

Engineering Checks

Cooling tons	0.29	Input Ventilation cfm	122
Cooling cfm	122.42	Calculated Ventilation cfm	0
ft²/ton	382.56	Number of People	0.00
cfm/ton	416.23	People per 1000 ft²	0
Conditioned ft²	112.5		

Conditions at Time of Heating Peak

Outside	DB / WB / HR	32.0 °F	/	32.0 °F	/	0.0 gr/lb
Zone	DB / RH / HR	32.0 °F	/	0.0 %	/	0.0 gr/lb

	Instant Sensible (Btu/h)	Time Delay Sensible (Btu/h)	Latent (Btu/h)	Total (Btu/h)	Percent of Total (%)
Roof	0	0	0	0	0.0
Other Roof	0	0	0	0	0.0
Glass	0	0	0	0	0.0
Door	0	0	0	0	0.0
Wall	0	0	0	0	0.0
Below-Grade Wall	0	0	0	0	0.0
Other Wall	0	0	0	0	0.0
Partition	0	0	0	0	0.0
Exterior Floor	0	0	0	0	0.0
Interior Floor	0	0	0	0	0.0
Slab	0	0	0	0	0.0
Other Floor	0	0	0	0	0.0
Infiltration	0	0	0	0	0.0
Envelope Subtotal	0	0	0	0	-
People	0	0	0	0	0.0
Lights	0	0	0	0	0.0
RA Sensible (Lights)	0	0	0	0	0.0
Miscellaneous Loads	0	0	0	0	0.0
Internal Subtotal	0	0	0	0	-
RA (All Other)	0	0	0	0	0.0
DOA Direct to Zone	0	0	0	0	0.0
Ceiling	0	0	0	0	0.0
Refrigeration	0	0	0	0	0.0
Service Water	0	0	0	0	0.0
HVAC Equipment Losses	0	0	0	0	0.0
Adj Air Transfer Heat	0	0	0	0	0.0
Sizing Factor Correction	0	0	0	0	0.0
Time Delay Correction	0	0	0	0	0.0
Grand Total	0	0	0	0	100.0

Engineering Checks

Heating Mbh	0.00	Input Ventilation cfm	122
Heating cfm	122.42	Calculated Ventilation cfm	0
ft²/Mbh	0.00	Number of People	0.00
cfm/Mbh	0.00	People per 1000 ft²	0
Conditioned ft²	112.5		

ZONE_Zone 00-44

Conditions at Time of Cooling Peak

Outside	DB / WB / HR	90.7 °F	/	73.9 °F	/	99.5 gr/lb
Zone	DB / RH / HR	81.0 °F	/	39.9 %	/	62.8 gr/lb

	Instant Sensible (Btu/h)	Time Delay Sensible (Btu/h)	Latent (Btu/h)	Total (Btu/h)	Percent of Total (%)
Roof	0	0	0	0	0.0
Other Roof	0	0	0	0	0.0
Glass	429	254	0	683	122.1
Door	0	-42	0	-42	-7.5
Wall	0	46	0	46	8.2
Below-Grade Wall	0	0	0	0	0.0
Other Wall	0	0	0	0	0.0
Partition	0	-257	0	-257	-45.9
Exterior Floor	0	0	0	0	0.0
Interior Floor	0	0	0	0	0.0
Slab	0	-149	0	-149	-26.6
Other Floor	0	0	0	0	0.0
Infiltration	0	0	0	0	0.0
Envelope Subtotal	429	-148	0	282	-
People	0	0	0	0	0.0
Lights	52	65	0	116	20.8
RA Sensible (Lights)	59	0	0	59	10.6
Miscellaneous Loads	0	0	0	0	0.0
Internal Subtotal	111	65	0	176	-
RA (All Other)	0	0	0	0	0.0
DOA Direct to Zone	0	0	0	0	0.0
Ceiling	0	-60	0	-60	-10.6
Refrigeration	0	0	0	0	0.0
Service Water	0	0	0	0	0.0
HVAC Equipment Losses	0	0	0	0	0.0
Adj Air Transfer Heat	0	0	0	0	0.0
Sizing Factor Correction	163	0	0	163	29.2
Time Delay Correction	0	-2	0	-2	-0.3
Grand Total	704	-144	0	559	100.0

Engineering Checks

Cooling tons	0.05	Input Ventilation cfm	0
Cooling cfm	0.00	Calculated Ventilation cfm	0
ft²/ton	1822.44	Number of People	0.00
cfm/ton	0.00	People per 1000 ft²	0
Conditioned ft²	84.9		

Conditions at Time of Heating Peak

Outside	DB / WB / HR	16.4 °F	/	12.6 °F	/	5.3 gr/lb
Zone	DB / RH / HR	70.0 °F	/	4.9 %	/	5.2 gr/lb

	Instant Sensible (Btu/h)	Time Delay Sensible (Btu/h)	Latent (Btu/h)	Total (Btu/h)	Percent of Total (%)
Roof	0	0	0	0	0.0
Other Roof	0	0	0	0	0.0
Glass	-1412	0	0	-1412	88.5
Door	0	28	0	28	-1.7
Wall	0	-127	0	-127	8.0
Below-Grade Wall	0	0	0	0	0.0
Other Wall	0	0	0	0	0.0
Partition	0	159	0	159	-10.0
Exterior Floor	0	0	0	0	0.0
Interior Floor	0	0	0	0	0.0
Slab	0	-1	0	-1	0.0
Other Floor	0	0	0	0	0.0
Infiltration	0	0	0	0	0.0
Envelope Subtotal	-1412	59	0	-1353	-
People	0	0	0	0	0.0
Lights	0	0	0	0	0.0
RA Sensible (Lights)	0	0	0	0	0.0
Miscellaneous Loads	0	0	0	0	0.0
Internal Subtotal	0	0	0	0	-
RA (All Other)	0	0	0	0	0.0
DOA Direct to Zone	0	0	0	0	0.0
Ceiling	0	-59	0	-59	3.7
Refrigeration	0	0	0	0	0.0
Service Water	0	0	0	0	0.0
HVAC Equipment Losses	0	0	0	0	0.0
Adj Air Transfer Heat	0	0	0	0	0.0
Sizing Factor Correction	-183	0	0	-183	11.5
Time Delay Correction	0	0	0	0	0.0
Grand Total	-1595	0	0	-1595	100.0

Engineering Checks

Heating Mbh	-1.60	Input Ventilation cfm	0
Heating cfm	59.28	Calculated Ventilation cfm	0
ft²/Mbh	-53.24	Number of People	0.00
cfm/Mbh	-37.16	People per 1000 ft²	0
Conditioned ft²	84.9		

ZONE_Zone 00-45

Conditions at Time of Cooling Peak

Outside	DB / WB / HR	82.5 °F	/	71.6 °F	/	99.4 gr/lb
Zone	DB / RH / HR	81.0 °F	/	39.9 %	/	62.8 gr/lb

	Instant Sensible (Btu/h)	Time Delay Sensible (Btu/h)	Latent (Btu/h)	Total (Btu/h)	Percent of Total (%)
Roof	0	0	0	0	0.0
Other Roof	0	0	0	0	0.0
Glass	0	0	0	0	0.0
Door	0	-458	0	-458	-2.7
Wall	0	0	0	0	0.0
Below-Grade Wall	0	0	0	0	0.0
Other Wall	0	0	0	0	0.0
Partition	0	-7430	0	-7430	-43.1
Exterior Floor	0	0	0	0	0.0
Interior Floor	0	0	0	0	0.0
Slab	0	-570	0	-570	-3.3
Other Floor	0	0	0	0	0.0
Infiltration	0	0	0	0	0.0
Envelope Subtotal	0	-8458	0	-8458	-
People	0	0	0	0	0.0
Lights	27	69	0	95	0.6
RA Sensible (Lights)	30	0	0	30	0.2
Miscellaneous Loads	10270	17063	0	27334	158.7
Internal Subtotal	10327	17132	0	27459	-
RA (All Other)	0	0	0	0	0.0
DOA Direct to Zone	0	0	0	0	0.0
Ceiling	0	-1775	0	-1775	-10.3
Refrigeration	0	0	0	0	0.0
Service Water	0	0	0	0	0.0
HVAC Equipment Losses	0	0	0	0	0.0
Adj Air Transfer Heat	0	0	0	0	0.0
Sizing Factor Correction	0	0	0	0	0.0
Time Delay Correction	0	0	0	0	0.0
Grand Total	10327	6899	0	17226	100.0

Engineering Checks

Cooling tons	1.44	Input Ventilation cfm	605
Cooling cfm	605.14	Calculated Ventilation cfm	0
ft²/ton	47.77	Number of People	0.00
cfm/ton	421.46	People per 1000 ft²	0
Conditioned ft²	68.6		

Conditions at Time of Heating Peak

Outside	DB / WB / HR	32.0 °F	/	32.0 °F	/	0.0 gr/lb
Zone	DB / RH / HR	32.0 °F	/	0.0 %	/	0.0 gr/lb

	Instant Sensible (Btu/h)	Time Delay Sensible (Btu/h)	Latent (Btu/h)	Total (Btu/h)	Percent of Total (%)
Roof	0	0	0	0	0.0
Other Roof	0	0	0	0	0.0
Glass	0	0	0	0	0.0
Door	0	0	0	0	0.0
Wall	0	0	0	0	0.0
Below-Grade Wall	0	0	0	0	0.0
Other Wall	0	0	0	0	0.0
Partition	0	0	0	0	0.0
Exterior Floor	0	0	0	0	0.0
Interior Floor	0	0	0	0	0.0
Slab	0	0	0	0	0.0
Other Floor	0	0	0	0	0.0
Infiltration	0	0	0	0	0.0
Envelope Subtotal	0	0	0	0	-
People	0	0	0	0	0.0
Lights	0	0	0	0	0.0
RA Sensible (Lights)	0	0	0	0	0.0
Miscellaneous Loads	0	0	0	0	0.0
Internal Subtotal	0	0	0	0	-
RA (All Other)	0	0	0	0	0.0
DOA Direct to Zone	0	0	0	0	0.0
Ceiling	0	0	0	0	0.0
Refrigeration	0	0	0	0	0.0
Service Water	0	0	0	0	0.0
HVAC Equipment Losses	0	0	0	0	0.0
Adj Air Transfer Heat	0	0	0	0	0.0
Sizing Factor Correction	0	0	0	0	0.0
Time Delay Correction	0	0	0	0	0.0
Grand Total	0	0	0	0	100.0

Engineering Checks

Heating Mbh	0.00	Input Ventilation cfm	605
Heating cfm	605.14	Calculated Ventilation cfm	0
ft²/Mbh	0.00	Number of People	0.00
cfm/Mbh	0.00	People per 1000 ft²	0
Conditioned ft²	68.6		

ZONE_Zone 00-48

Conditions at Time of Cooling Peak

Outside	DB / WB / HR	86.8 °F	/	72.3 °F	/	96.6 gr/lb
Zone	DB / RH / HR	81.0 °F	/	39.9 %	/	62.8 gr/lb

	Instant Sensible (Btu/h)	Time Delay Sensible (Btu/h)	Latent (Btu/h)	Total (Btu/h)	Percent of Total (%)
Roof	0	0	0	0	0.0
Other Roof	0	0	0	0	0.0
Glass	0	0	0	0	0.0
Door	0	-18	0	-18	-0.5
Wall	0	0	0	0	0.0
Below-Grade Wall	0	0	0	0	0.0
Other Wall	0	0	0	0	0.0
Partition	0	-684	0	-684	-20.5
Exterior Floor	0	0	0	0	0.0
Interior Floor	0	0	0	0	0.0
Slab	0	35	0	35	1.0
Other Floor	0	0	0	0	0.0
Infiltration	0	0	0	0	0.0
Envelope Subtotal	0	-667	0	-667	-
People	0	0	0	0	0.0
Lights	42	66	0	108	3.2
RA Sensible (Lights)	48	0	0	48	1.4
Miscellaneous Loads	2366	1611	0	3977	119.0
Internal Subtotal	2455	1678	0	4133	-
RA (All Other)	0	0	0	0	0.0
DOA Direct to Zone	0	0	0	0	0.0
Ceiling	0	-123	0	-123	-3.7
Refrigeration	0	0	0	0	0.0
Service Water	0	0	0	0	0.0
HVAC Equipment Losses	0	0	0	0	0.0
Adj Air Transfer Heat	0	0	0	0	0.0
Sizing Factor Correction	0	0	0	0	0.0
Time Delay Correction	0	0	0	0	0.0
Grand Total	2455	888	0	3343	100.0

Engineering Checks

Cooling tons	0.28	Input Ventilation cfm	116
Cooling cfm	115.96	Calculated Ventilation cfm	0
ft²/ton	387.19	Number of People	0.00
cfm/ton	416.16	People per 1000 ft²	0
Conditioned ft²	107.9		

Conditions at Time of Heating Peak

Outside	DB / WB / HR	32.0 °F	/	32.0 °F	/	0.0 gr/lb
Zone	DB / RH / HR	32.0 °F	/	0.0 %	/	0.0 gr/lb

	Instant Sensible (Btu/h)	Time Delay Sensible (Btu/h)	Latent (Btu/h)	Total (Btu/h)	Percent of Total (%)
Roof	0	0	0	0	0.0
Other Roof	0	0	0	0	0.0
Glass	0	0	0	0	0.0
Door	0	0	0	0	0.0
Wall	0	0	0	0	0.0
Below-Grade Wall	0	0	0	0	0.0
Other Wall	0	0	0	0	0.0
Partition	0	0	0	0	0.0
Exterior Floor	0	0	0	0	0.0
Interior Floor	0	0	0	0	0.0
Slab	0	0	0	0	0.0
Other Floor	0	0	0	0	0.0
Infiltration	0	0	0	0	0.0
Envelope Subtotal	0	0	0	0	-
People	0	0	0	0	0.0
Lights	0	0	0	0	0.0
RA Sensible (Lights)	0	0	0	0	0.0
Miscellaneous Loads	0	0	0	0	0.0
Internal Subtotal	0	0	0	0	-
RA (All Other)	0	0	0	0	0.0
DOA Direct to Zone	0	0	0	0	0.0
Ceiling	0	0	0	0	0.0
Refrigeration	0	0	0	0	0.0
Service Water	0	0	0	0	0.0
HVAC Equipment Losses	0	0	0	0	0.0
Adj Air Transfer Heat	0	0	0	0	0.0
Sizing Factor Correction	0	0	0	0	0.0
Time Delay Correction	0	0	0	0	0.0
Grand Total	0	0	0	0	100.0

Engineering Checks

Heating Mbh	0.00	Input Ventilation cfm	116
Heating cfm	115.96	Calculated Ventilation cfm	0
ft²/Mbh	0.00	Number of People	0.00
cfm/Mbh	0.00	People per 1000 ft²	0
Conditioned ft²	107.9		

ZONE_Zone 00-49

Conditions at Time of Cooling Peak

Outside	DB / WB / HR	86.8 °F	/	72.3 °F	/	96.6 gr/lb
Zone	DB / RH / HR	81.0 °F	/	39.9 %	/	62.8 gr/lb

	Instant Sensible (Btu/h)	Time Delay Sensible (Btu/h)	Latent (Btu/h)	Total (Btu/h)	Percent of Total (%)
Roof	0	0	0	0	0.0
Other Roof	0	0	0	0	0.0
Glass	0	0	0	0	0.0
Door	0	9	0	9	2.6
Wall	0	0	0	0	0.0
Below-Grade Wall	0	0	0	0	0.0
Other Wall	0	0	0	0	0.0
Partition	0	35	0	35	9.7
Exterior Floor	0	0	0	0	0.0
Interior Floor	0	0	0	0	0.0
Slab	0	-13	0	-13	-3.8
Other Floor	0	0	0	0	0.0
Infiltration	0	0	0	0	0.0
Envelope Subtotal	0	31	0	31	-
People	0	0	0	0	0.0
Lights	40	47	0	87	24.5
RA Sensible (Lights)	46	0	0	46	13.0
Miscellaneous Loads	135	67	0	202	56.6
Internal Subtotal	222	114	0	336	-
RA (All Other)	0	0	0	0	0.0
DOA Direct to Zone	0	0	0	0	0.0
Ceiling	0	-10	0	-10	-2.7
Refrigeration	0	0	0	0	0.0
Service Water	0	0	0	0	0.0
HVAC Equipment Losses	0	0	0	0	0.0
Adj Air Transfer Heat	0	0	0	0	0.0
Sizing Factor Correction	0	0	0	0	0.0
Time Delay Correction	0	0	0	0	0.0
Grand Total	222	135	0	357	100.0

Engineering Checks

Cooling tons	0.03	Input Ventilation cfm	11
Cooling cfm	10.92	Calculated Ventilation cfm	0
ft²/ton	3518.89	Number of People	0.00
cfm/ton	367.19	People per 1000 ft²	0
Conditioned ft²	104.6		

Conditions at Time of Heating Peak

Outside	DB / WB / HR	32.0 °F	/	32.0 °F	/	0.0 gr/lb
Zone	DB / RH / HR	32.0 °F	/	0.0 %	/	0.0 gr/lb

	Instant Sensible (Btu/h)	Time Delay Sensible (Btu/h)	Latent (Btu/h)	Total (Btu/h)	Percent of Total (%)
Roof	0	0	0	0	0.0
Other Roof	0	0	0	0	0.0
Glass	0	0	0	0	0.0
Door	0	0	0	0	0.0
Wall	0	0	0	0	0.0
Below-Grade Wall	0	0	0	0	0.0
Other Wall	0	0	0	0	0.0
Partition	0	0	0	0	0.0
Exterior Floor	0	0	0	0	0.0
Interior Floor	0	0	0	0	0.0
Slab	0	0	0	0	0.0
Other Floor	0	0	0	0	0.0
Infiltration	0	0	0	0	0.0
Envelope Subtotal	0	0	0	0	-
People	0	0	0	0	0.0
Lights	0	0	0	0	0.0
RA Sensible (Lights)	0	0	0	0	0.0
Miscellaneous Loads	0	0	0	0	0.0
Internal Subtotal	0	0	0	0	-
RA (All Other)	0	0	0	0	0.0
DOA Direct to Zone	0	0	0	0	0.0
Ceiling	0	0	0	0	0.0
Refrigeration	0	0	0	0	0.0
Service Water	0	0	0	0	0.0
HVAC Equipment Losses	0	0	0	0	0.0
Adj Air Transfer Heat	0	0	0	0	0.0
Sizing Factor Correction	0	0	0	0	0.0
Time Delay Correction	0	0	0	0	0.0
Grand Total	0	0	0	0	100.0

Engineering Checks

Heating Mbh	0.00	Input Ventilation cfm	11
Heating cfm	10.92	Calculated Ventilation cfm	0
ft²/Mbh	0.00	Number of People	0.00
cfm/Mbh	0.00	People per 1000 ft²	0
Conditioned ft²	104.6		

ZONE_Zone 01-07

Conditions at Time of Cooling Peak

Outside	DB / WB / HR	86.6 °F	/	72.7 °F	/	99.5 gr/lb
Zone	DB / RH / HR	81.0 °F	/	39.9 %	/	62.8 gr/lb

	Instant Sensible (Btu/h)	Time Delay Sensible (Btu/h)	Latent (Btu/h)	Total (Btu/h)	Percent of Total (%)
Roof	0	0	0	0	0.0
Other Roof	0	0	0	0	0.0
Glass	0	0	0	0	0.0
Door	0	-15	0	-15	-0.8
Wall	0	561	0	561	31.4
Below-Grade Wall	0	0	0	0	0.0
Other Wall	0	0	0	0	0.0
Partition	0	-138	0	-138	-7.7
Exterior Floor	0	0	0	0	0.0
Interior Floor	0	328	0	328	18.4
Slab	0	0	0	0	0.0
Other Floor	0	0	0	0	0.0
Infiltration	0	0	0	0	0.0
Envelope Subtotal	0	737	0	737	-
People	0	0	0	0	0.0
Lights	154	353	0	506	28.3
RA Sensible (Lights)	176	0	0	176	9.9
Miscellaneous Loads	0	0	0	0	0.0
Internal Subtotal	330	353	0	683	-
RA (All Other)	0	0	0	0	0.0
DOA Direct to Zone	0	0	0	0	0.0
Ceiling	0	368	0	368	20.6
Refrigeration	0	0	0	0	0.0
Service Water	0	0	0	0	0.0
HVAC Equipment Losses	0	0	0	0	0.0
Adj Air Transfer Heat	0	0	0	0	0.0
Sizing Factor Correction	0	0	0	0	0.0
Time Delay Correction	0	0	0	0	0.0
Grand Total	330	1457	0	1787	100.0

Engineering Checks

Cooling tons	0.15	Input Ventilation cfm	65
Cooling cfm	65.47	Calculated Ventilation cfm	0
ft²/ton	1622.35	Number of People	0.00
cfm/ton	439.61	People per 1000 ft²	0
Conditioned ft²	241.5		

Conditions at Time of Heating Peak

Outside	DB / WB / HR	16.4 °F	/	12.6 °F	/	5.3 gr/lb
Zone	DB / RH / HR	70.0 °F	/	4.9 %	/	5.2 gr/lb

	Instant Sensible (Btu/h)	Time Delay Sensible (Btu/h)	Latent (Btu/h)	Total (Btu/h)	Percent of Total (%)
Roof	0	0	0	0	0.0
Other Roof	0	0	0	0	0.0
Glass	0	0	0	0	0.0
Door	0	4	0	4	-0.2
Wall	0	-717	0	-717	40.7
Below-Grade Wall	0	0	0	0	0.0
Other Wall	0	0	0	0	0.0
Partition	0	9	0	9	-0.5
Exterior Floor	0	0	0	0	0.0
Interior Floor	0	-220	0	-220	12.5
Slab	0	0	0	0	0.0
Other Floor	0	0	0	0	0.0
Infiltration	0	0	0	0	0.0
Envelope Subtotal	0	-924	0	-924	-
People	0	0	0	0	0.0
Lights	0	0	0	0	0.0
RA Sensible (Lights)	0	0	0	0	0.0
Miscellaneous Loads	0	0	0	0	0.0
Internal Subtotal	0	0	0	0	-
RA (All Other)	0	0	0	0	0.0
DOA Direct to Zone	0	0	0	0	0.0
Ceiling	0	-838	0	-838	47.6
Refrigeration	0	0	0	0	0.0
Service Water	0	0	0	0	0.0
HVAC Equipment Losses	0	0	0	0	0.0
Adj Air Transfer Heat	0	0	0	0	0.0
Sizing Factor Correction	0	0	0	0	0.0
Time Delay Correction	0	0	0	0	0.0
Grand Total	0	-1762	0	-1762	100.0

Engineering Checks

Heating Mbh	-1.76	Input Ventilation cfm	65
Heating cfm	65.47	Calculated Ventilation cfm	0
ft²/Mbh	-137.09	Number of People	0.00
cfm/Mbh	-37.15	People per 1000 ft²	0
Conditioned ft²	241.5		

ZONE_Zone 01-08

Conditions at Time of Cooling Peak

Outside	DB / WB / HR	88.3 °F	/	73.2 °F	/	99.5 gr/lb
Zone	DB / RH / HR	81.0 °F	/	39.9 %	/	62.8 gr/lb

	Instant Sensible (Btu/h)	Time Delay Sensible (Btu/h)	Latent (Btu/h)	Total (Btu/h)	Percent of Total (%)
Roof	0	0	0	0	0.0
Other Roof	0	0	0	0	0.0
Glass	0	0	0	0	0.0
Door	0	-75	0	-75	-2.2
Wall	0	0	0	0	0.0
Below-Grade Wall	0	0	0	0	0.0
Other Wall	0	0	0	0	0.0
Partition	0	-1451	0	-1451	-41.8
Exterior Floor	0	0	0	0	0.0
Interior Floor	0	-459	0	-459	-13.2
Slab	0	0	0	0	0.0
Other Floor	0	0	0	0	0.0
Infiltration	0	0	0	0	0.0
Envelope Subtotal	0	-1986	0	-1986	-
People	0	0	0	0	0.0
Lights	37	116	0	153	4.4
RA Sensible (Lights)	43	0	0	43	1.2
Miscellaneous Loads	2351	3138	0	5489	158.0
Internal Subtotal	2430	3254	0	5684	-
RA (All Other)	0	0	0	0	0.0
DOA Direct to Zone	0	0	0	0	0.0
Ceiling	0	-225	0	-225	-6.5
Refrigeration	0	0	0	0	0.0
Service Water	0	0	0	0	0.0
HVAC Equipment Losses	0	0	0	0	0.0
Adj Air Transfer Heat	0	0	0	0	0.0
Sizing Factor Correction	0	0	0	0	0.0
Time Delay Correction	0	0	0	0	0.0
Grand Total	2430	1043	0	3473	100.0

Engineering Checks

Cooling tons	0.29	Input Ventilation cfm	121
Cooling cfm	120.73	Calculated Ventilation cfm	0
ft²/ton	331.74	Number of People	0.00
cfm/ton	417.02	People per 1000 ft²	0
Conditioned ft²	96.0		

Conditions at Time of Heating Peak

Outside	DB / WB / HR	32.0 °F	/	32.0 °F	/	0.0 gr/lb
Zone	DB / RH / HR	32.0 °F	/	0.0 %	/	0.0 gr/lb

	Instant Sensible (Btu/h)	Time Delay Sensible (Btu/h)	Latent (Btu/h)	Total (Btu/h)	Percent of Total (%)
Roof	0	0	0	0	0.0
Other Roof	0	0	0	0	0.0
Glass	0	0	0	0	0.0
Door	0	0	0	0	0.0
Wall	0	0	0	0	0.0
Below-Grade Wall	0	0	0	0	0.0
Other Wall	0	0	0	0	0.0
Partition	0	0	0	0	0.0
Exterior Floor	0	0	0	0	0.0
Interior Floor	0	0	0	0	0.0
Slab	0	0	0	0	0.0
Other Floor	0	0	0	0	0.0
Infiltration	0	0	0	0	0.0
Envelope Subtotal	0	0	0	0	-
People	0	0	0	0	0.0
Lights	0	0	0	0	0.0
RA Sensible (Lights)	0	0	0	0	0.0
Miscellaneous Loads	0	0	0	0	0.0
Internal Subtotal	0	0	0	0	-
RA (All Other)	0	0	0	0	0.0
DOA Direct to Zone	0	0	0	0	0.0
Ceiling	0	0	0	0	0.0
Refrigeration	0	0	0	0	0.0
Service Water	0	0	0	0	0.0
HVAC Equipment Losses	0	0	0	0	0.0
Adj Air Transfer Heat	0	0	0	0	0.0
Sizing Factor Correction	0	0	0	0	0.0
Time Delay Correction	0	0	0	0	0.0
Grand Total	0	0	0	0	100.0

Engineering Checks

Heating Mbh	0.00	Input Ventilation cfm	121
Heating cfm	120.73	Calculated Ventilation cfm	0
ft²/Mbh	0.00	Number of People	0.00
cfm/Mbh	0.00	People per 1000 ft²	0
Conditioned ft²	96.0		

ZONE_Zone 01-09

Conditions at Time of Cooling Peak

Outside	DB / WB / HR	87.8 °F	/	73.1 °F	/	99.5 gr/lb
Zone	DB / RH / HR	81.0 °F	/	39.9 %	/	62.8 gr/lb

	Instant Sensible (Btu/h)	Time Delay Sensible (Btu/h)	Latent (Btu/h)	Total (Btu/h)	Percent of Total (%)
Roof	0	0	0	0	0.0
Other Roof	0	0	0	0	0.0
Glass	0	0	0	0	0.0
Door	0	-9	0	-9	-1.5
Wall	0	0	0	0	0.0
Below-Grade Wall	0	0	0	0	0.0
Other Wall	0	0	0	0	0.0
Partition	0	-88	0	-88	-15.5
Exterior Floor	0	0	0	0	0.0
Interior Floor	0	-45	0	-45	-8.0
Slab	0	0	0	0	0.0
Other Floor	0	0	0	0	0.0
Infiltration	0	0	0	0	0.0
Envelope Subtotal	0	-141	0	-141	-
People	0	0	0	0	0.0
Lights	41	100	0	141	25.0
RA Sensible (Lights)	47	0	0	47	8.3
Miscellaneous Loads	137	143	0	280	49.5
Internal Subtotal	225	243	0	468	-
RA (All Other)	0	0	0	0	0.0
DOA Direct to Zone	0	0	0	0	0.0
Ceiling	0	209	0	209	37.0
Refrigeration	0	0	0	0	0.0
Service Water	0	0	0	0	0.0
HVAC Equipment Losses	0	0	0	0	0.0
Adj Air Transfer Heat	0	0	0	0	0.0
Sizing Factor Correction	30	0	0	30	5.3
Time Delay Correction	0	0	0	0	0.0
Grand Total	255	311	0	565	100.0

Engineering Checks

Cooling tons	0.05	Input Ventilation cfm	18
Cooling cfm	18.24	Calculated Ventilation cfm	0
ft²/ton	2250.56	Number of People	0.00
cfm/ton	387.05	People per 1000 ft²	0
Conditioned ft²	106.0		

Conditions at Time of Heating Peak

Outside	DB / WB / HR	16.4 °F	/	12.6 °F	/	5.3 gr/lb
Zone	DB / RH / HR	70.0 °F	/	4.9 %	/	5.2 gr/lb

	Instant Sensible (Btu/h)	Time Delay Sensible (Btu/h)	Latent (Btu/h)	Total (Btu/h)	Percent of Total (%)
Roof	0	0	0	0	0.0
Other Roof	0	0	0	0	0.0
Glass	0	0	0	0	0.0
Door	0	-15	0	-15	17.3
Wall	0	0	0	0	0.0
Below-Grade Wall	0	0	0	0	0.0
Other Wall	0	0	0	0	0.0
Partition	0	195	0	195	-228.4
Exterior Floor	0	0	0	0	0.0
Interior Floor	0	41	0	41	-47.8
Slab	0	0	0	0	0.0
Other Floor	0	0	0	0	0.0
Infiltration	0	0	0	0	0.0
Envelope Subtotal	0	222	0	222	-
People	0	0	0	0	0.0
Lights	0	0	0	0	0.0
RA Sensible (Lights)	0	0	0	0	0.0
Miscellaneous Loads	0	0	0	0	0.0
Internal Subtotal	0	0	0	0	-
RA (All Other)	0	0	0	0	0.0
DOA Direct to Zone	0	0	0	0	0.0
Ceiling	0	-307	0	-307	358.9
Refrigeration	0	0	0	0	0.0
Service Water	0	0	0	0	0.0
HVAC Equipment Losses	0	0	0	0	0.0
Adj Air Transfer Heat	0	0	0	0	0.0
Sizing Factor Correction	0	0	0	0	0.0
Time Delay Correction	0	0	0	0	0.0
Grand Total	0	-86	0	-86	100.0

Engineering Checks

Heating Mbh	-0.09	Input Ventilation cfm	18
Heating cfm	18.24	Calculated Ventilation cfm	0
ft²/Mbh	-1239.53	Number of People	0.00
cfm/Mbh	-213.21	People per 1000 ft²	0
Conditioned ft²	106.0		

ZONE_Zone 01-27

Conditions at Time of Cooling Peak

Outside	DB / WB / HR	86.4 °F	/	72.7 °F	/	99.5 gr/lb
Zone	DB / RH / HR	81.0 °F	/	39.9 %	/	62.8 gr/lb

	Instant Sensible (Btu/h)	Time Delay Sensible (Btu/h)	Latent (Btu/h)	Total (Btu/h)	Percent of Total (%)
Roof	0	0	0	0	0.0
Other Roof	0	0	0	0	0.0
Glass	0	0	0	0	0.0
Door	0	-50	0	-50	-1.3
Wall	0	0	0	0	0.0
Below-Grade Wall	0	0	0	0	0.0
Other Wall	0	0	0	0	0.0
Partition	0	-1348	0	-1348	-36.2
Exterior Floor	0	0	0	0	0.0
Interior Floor	0	-496	0	-496	-13.3
Slab	0	0	0	0	0.0
Other Floor	0	0	0	0	0.0
Infiltration	0	0	0	0	0.0
Envelope Subtotal	0	-1894	0	-1894	-
People	0	0	0	0	0.0
Lights	40	130	0	171	4.6
RA Sensible (Lights)	46	0	0	46	1.2
Miscellaneous Loads	2362	3251	0	5613	150.6
Internal Subtotal	2449	3381	0	5830	-
RA (All Other)	0	0	0	0	0.0
DOA Direct to Zone	0	0	0	0	0.0
Ceiling	0	-209	0	-209	-5.6
Refrigeration	0	0	0	0	0.0
Service Water	0	0	0	0	0.0
HVAC Equipment Losses	0	0	0	0	0.0
Adj Air Transfer Heat	0	0	0	0	0.0
Sizing Factor Correction	0	0	0	0	0.0
Time Delay Correction	0	0	0	0	0.0
Grand Total	2449	1279	0	3727	100.0

Engineering Checks

Cooling tons	0.31	Input Ventilation cfm	130
Cooling cfm	129.54	Calculated Ventilation cfm	0
ft²/ton	336.85	Number of People	0.00
cfm/ton	416.94	People per 1000 ft²	0
Conditioned ft²	104.6		

Conditions at Time of Heating Peak

Outside	DB / WB / HR	32.0 °F	/	32.0 °F	/	0.0 gr/lb
Zone	DB / RH / HR	32.0 °F	/	0.0 %	/	0.0 gr/lb

	Instant Sensible (Btu/h)	Time Delay Sensible (Btu/h)	Latent (Btu/h)	Total (Btu/h)	Percent of Total (%)
Roof	0	0	0	0	0.0
Other Roof	0	0	0	0	0.0
Glass	0	0	0	0	0.0
Door	0	0	0	0	0.0
Wall	0	0	0	0	0.0
Below-Grade Wall	0	0	0	0	0.0
Other Wall	0	0	0	0	0.0
Partition	0	0	0	0	0.0
Exterior Floor	0	0	0	0	0.0
Interior Floor	0	0	0	0	0.0
Slab	0	0	0	0	0.0
Other Floor	0	0	0	0	0.0
Infiltration	0	0	0	0	0.0
Envelope Subtotal	0	0	0	0	-
People	0	0	0	0	0.0
Lights	0	0	0	0	0.0
RA Sensible (Lights)	0	0	0	0	0.0
Miscellaneous Loads	0	0	0	0	0.0
Internal Subtotal	0	0	0	0	-
RA (All Other)	0	0	0	0	0.0
DOA Direct to Zone	0	0	0	0	0.0
Ceiling	0	0	0	0	0.0
Refrigeration	0	0	0	0	0.0
Service Water	0	0	0	0	0.0
HVAC Equipment Losses	0	0	0	0	0.0
Adj Air Transfer Heat	0	0	0	0	0.0
Sizing Factor Correction	0	0	0	0	0.0
Time Delay Correction	0	0	0	0	0.0
Grand Total	0	0	0	0	100.0

Engineering Checks

Heating Mbh	0.00	Input Ventilation cfm	130
Heating cfm	129.54	Calculated Ventilation cfm	0
ft²/Mbh	0.00	Number of People	0.00
cfm/Mbh	0.00	People per 1000 ft²	0
Conditioned ft²	104.6		

ZONE_Zone 01-28

Conditions at Time of Cooling Peak

Outside	DB / WB / HR	88.3 °F	/	73.2 °F	/	99.5 gr/lb
Zone	DB / RH / HR	81.0 °F	/	39.9 %	/	62.8 gr/lb

	Instant Sensible (Btu/h)	Time Delay Sensible (Btu/h)	Latent (Btu/h)	Total (Btu/h)	Percent of Total (%)
Roof	0	607	0	607	2.6
Other Roof	0	0	0	0	0.0
Glass	5925	24035	0	29960	130.1
Door	0	-157	0	-157	-0.7
Wall	0	0	0	0	0.0
Below-Grade Wall	0	0	0	0	0.0
Other Wall	0	0	0	0	0.0
Partition	0	-5840	0	-5840	-25.4
Exterior Floor	0	0	0	0	0.0
Interior Floor	0	-2133	0	-2133	-9.3
Slab	0	0	0	0	0.0
Other Floor	0	0	0	0	0.0
Infiltration	0	0	0	0	0.0
Envelope Subtotal	5925	16512	0	22437	-
People	0	0	0	0	0.0
Lights	138	309	0	447	1.9
RA Sensible (Lights)	158	0	0	158	0.7
Miscellaneous Loads	0	0	0	0	0.0
Internal Subtotal	297	309	0	605	-
RA (All Other)	0	0	0	0	0.0
DOA Direct to Zone	0	0	0	0	0.0
Ceiling	0	0	0	0	0.0
Refrigeration	0	0	0	0	0.0
Service Water	0	0	0	0	0.0
HVAC Equipment Losses	0	0	0	0	0.0
Adj Air Transfer Heat	0	0	0	0	0.0
Sizing Factor Correction	0	0	0	0	0.0
Time Delay Correction	0	-19	0	-19	-0.1
Grand Total	6222	16802	0	23024	100.0

Engineering Checks

Cooling tons	1.92	Input Ventilation cfm	805
Cooling cfm	804.66	Calculated Ventilation cfm	0
ft²/ton	113.17	Number of People	0.00
cfm/ton	419.30	People per 1000 ft²	0
Conditioned ft²	217.1		

Conditions at Time of Heating Peak

Outside	DB / WB / HR	16.4 °F	/	12.6 °F	/	5.3 gr/lb
Zone	DB / RH / HR	70.0 °F	/	4.9 %	/	5.2 gr/lb

	Instant Sensible (Btu/h)	Time Delay Sensible (Btu/h)	Latent (Btu/h)	Total (Btu/h)	Percent of Total (%)
Roof	0	-535	0	-535	6.7
Other Roof	0	0	0	0	0.0
Glass	-7887	0	0	-7887	98.6
Door	0	27	0	27	-0.3
Wall	0	-1	0	-1	0.0
Below-Grade Wall	0	0	0	0	0.0
Other Wall	0	0	0	0	0.0
Partition	0	257	0	257	-3.2
Exterior Floor	0	0	0	0	0.0
Interior Floor	0	143	0	143	-1.8
Slab	0	0	0	0	0.0
Other Floor	0	0	0	0	0.0
Infiltration	0	0	0	0	0.0
Envelope Subtotal	-7887	-109	0	-7996	-
People	0	0	0	0	0.0
Lights	0	0	0	0	0.0
RA Sensible (Lights)	0	0	0	0	0.0
Miscellaneous Loads	0	0	0	0	0.0
Internal Subtotal	0	0	0	0	-
RA (All Other)	0	0	0	0	0.0
DOA Direct to Zone	0	0	0	0	0.0
Ceiling	0	0	0	0	0.0
Refrigeration	0	0	0	0	0.0
Service Water	0	0	0	0	0.0
HVAC Equipment Losses	0	0	0	0	0.0
Adj Air Transfer Heat	0	0	0	0	0.0
Sizing Factor Correction	0	0	0	0	0.0
Time Delay Correction	0	0	0	0	0.0
Grand Total	-7887	-109	0	-7996	100.0

Engineering Checks

Heating Mbh	-8.00	Input Ventilation cfm	805
Heating cfm	804.66	Calculated Ventilation cfm	0
ft²/Mbh	-27.16	Number of People	0.00
cfm/Mbh	-100.63	People per 1000 ft²	0
Conditioned ft²	217.1		

ZONE_Zone 01-29

Conditions at Time of Cooling Peak

Outside	DB / WB / HR	87.1 °F	/	72.9 °F	/	99.5 gr/lb
Zone	DB / RH / HR	81.0 °F	/	39.9 %	/	62.8 gr/lb

	Instant Sensible (Btu/h)	Time Delay Sensible (Btu/h)	Latent (Btu/h)	Total (Btu/h)	Percent of Total (%)
Roof	0	0	0	0	0.0
Other Roof	0	0	0	0	0.0
Glass	0	0	0	0	0.0
Door	0	17	0	17	1.0
Wall	0	0	0	0	0.0
Below-Grade Wall	0	0	0	0	0.0
Other Wall	0	0	0	0	0.0
Partition	0	-455	0	-455	-25.5
Exterior Floor	0	0	0	0	0.0
Interior Floor	0	-252	0	-252	-14.1
Slab	0	0	0	0	0.0
Other Floor	0	0	0	0	0.0
Infiltration	0	0	0	0	0.0
Envelope Subtotal	0	-690	0	-690	-
People	0	0	0	0	0.0
Lights	214	453	0	666	37.4
RA Sensible (Lights)	245	0	0	245	13.8
Miscellaneous Loads	475	431	0	906	50.9
Internal Subtotal	934	884	0	1818	-
RA (All Other)	0	0	0	0	0.0
DOA Direct to Zone	0	0	0	0	0.0
Ceiling	0	653	0	653	36.7
Refrigeration	0	0	0	0	0.0
Service Water	0	0	0	0	0.0
HVAC Equipment Losses	0	0	0	0	0.0
Adj Air Transfer Heat	0	0	0	0	0.0
Sizing Factor Correction	0	0	0	0	0.0
Time Delay Correction	0	0	0	0	0.0
Grand Total	934	848	0	1782	100.0

Engineering Checks

Cooling tons	0.15	Input Ventilation cfm	74
Cooling cfm	73.61	Calculated Ventilation cfm	22
ft²/ton	2479.08	Number of People	0.00
cfm/ton	495.73	People per 1000 ft²	0
Conditioned ft²	368.0		

Conditions at Time of Heating Peak

Outside	DB / WB / HR	16.4 °F	/	12.6 °F	/	5.3 gr/lb
Zone	DB / RH / HR	70.0 °F	/	4.9 %	/	5.2 gr/lb

	Instant Sensible (Btu/h)	Time Delay Sensible (Btu/h)	Latent (Btu/h)	Total (Btu/h)	Percent of Total (%)
Roof	0	0	0	0	0.0
Other Roof	0	0	0	0	0.0
Glass	0	0	0	0	0.0
Door	0	-20	0	-20	2.7
Wall	0	0	0	0	0.0
Below-Grade Wall	0	0	0	0	0.0
Other Wall	0	0	0	0	0.0
Partition	0	125	0	125	-17.1
Exterior Floor	0	0	0	0	0.0
Interior Floor	0	151	0	151	-20.7
Slab	0	0	0	0	0.0
Other Floor	0	0	0	0	0.0
Infiltration	0	0	0	0	0.0
Envelope Subtotal	0	256	0	256	-
People	0	0	0	0	0.0
Lights	0	0	0	0	0.0
RA Sensible (Lights)	0	0	0	0	0.0
Miscellaneous Loads	0	0	0	0	0.0
Internal Subtotal	0	0	0	0	-
RA (All Other)	0	0	0	0	0.0
DOA Direct to Zone	0	0	0	0	0.0
Ceiling	0	-986	0	-986	135.1
Refrigeration	0	0	0	0	0.0
Service Water	0	0	0	0	0.0
HVAC Equipment Losses	0	0	0	0	0.0
Adj Air Transfer Heat	0	0	0	0	0.0
Sizing Factor Correction	0	0	0	0	0.0
Time Delay Correction	0	0	0	0	0.0
Grand Total	0	-729	0	-729	100.0

Engineering Checks

Heating Mbh	-0.73	Input Ventilation cfm	74
Heating cfm	73.61	Calculated Ventilation cfm	22
ft²/Mbh	-504.65	Number of People	0.00
cfm/Mbh	-100.93	People per 1000 ft²	0
Conditioned ft²	368.0		

Room Cooling and Heating Loads by Component

ROOM_01_100_LOBBY_R02

Conditions at Time of Cooling Peak

Outside	DB / WB / HR	82.1 °F	/	70.6 °F	/	95.0 gr/lb
Room	DB / RH / HR	75.0 °F	/	52.6 %	/	68.0 gr/lb

	Instant Sensible (Btu/h)	Time Delay Sensible (Btu/h)	Latent (Btu/h)	Total (Btu/h)	Percent of Total (%)
Roof	0	0	0	0	0.0
Other Roof	0	0	0	0	0.0
Glass	2116	241	0	2357	35.2
Door	0	78	0	78	1.2
Wall	0	0	0	0	0.0
Below-Grade Wall	0	0	0	0	0.0
Other Wall	0	0	0	0	0.0
Partition	0	79	0	79	1.2
Exterior Floor	0	0	0	0	0.0
Interior Floor	0	0	0	0	0.0
Slab	0	-28	0	-28	-0.4
Other Floor	0	0	0	0	0.0
Infiltration	0	0	0	0	0.0
Envelope Subtotal	2116	370	0	2486	-
People	551	437	871	1858	27.8
Lights	466	345	0	811	12.1
RA Sensible (Lights)	535	0	0	535	8.0
Miscellaneous Loads	725	272	0	997	14.9
Internal Subtotal	2276	1053	871	4201	-
RA (All Other)	0	0	0	0	0.0
DOA Direct to Room	0	0	0	0	0.0
Ceiling	0	307	0	307	4.6
Refrigeration	0	0	0	0	0.0
Service Water	0	0	0	0	0.0
HVAC Equipment Losses	0	0	0	0	0.0
Adj Air Transfer Heat	0	0	0	0	0.0
Sizing Factor Correction	0	0	0	0	0.0
Time Delay Correction	0	-297	0	-297	-4.4
Grand Total	4393	1433	871	6696	100.0

Engineering Checks

Cooling tons	0.56	Input Ventilation cfm	62
Cooling cfm	686.87	Calculated Ventilation cfm	146
ft²/ton	1007.22	Number of People	5.62
cfm/ton	1,230.69	People per 1000 ft²	10
Conditioned ft²	562.0		

Conditions at Time of Heating Peak

Outside	DB / WB / HR	16.4 °F	/	12.6 °F	/	5.3 gr/lb
Room	DB / RH / HR	70.0 °F	/	4.9 %	/	5.2 gr/lb

	Instant Sensible (Btu/h)	Time Delay Sensible (Btu/h)	Latent (Btu/h)	Total (Btu/h)	Percent of Total (%)
Roof	0	0	0	0	0.0
Other Roof	0	0	0	0	0.0
Glass	-918	0	0	-918	84.2
Door	0	10	0	10	-0.9
Wall	0	0	0	0	0.0
Below-Grade Wall	0	0	0	0	0.0
Other Wall	0	0	0	0	0.0
Partition	0	11	0	11	-1.0
Exterior Floor	0	0	0	0	0.0
Interior Floor	0	0	0	0	0.0
Slab	0	-5	0	-5	0.4
Other Floor	0	0	0	0	0.0
Infiltration	0	0	0	0	0.0
Envelope Subtotal	-918	16	0	-901	-
People	0	0	0	0	0.0
Lights	0	0	0	0	0.0
RA Sensible (Lights)	0	0	0	0	0.0
Miscellaneous Loads	0	0	0	0	0.0
Internal Subtotal	0	0	0	0	-
RA (All Other)	0	0	0	0	0.0
DOA Direct to Room	0	0	0	0	0.0
Ceiling	0	-188	0	-188	17.3
Refrigeration	0	0	0	0	0.0
Service Water	0	0	0	0	0.0
HVAC Equipment Losses	0	0	0	0	0.0
Adj Air Transfer Heat	0	0	0	0	0.0
Sizing Factor Correction	0	0	0	0	0.0
Time Delay Correction	0	0	0	0	0.0
Grand Total	-918	-172	0	-1090	100.0

Engineering Checks

Heating Mbh	-1.09	Input Ventilation cfm	62
Heating cfm	206.06	Calculated Ventilation cfm	58
ft²/Mbh	-515.69	Number of People	5.62
cfm/Mbh	-189.07	People per 1000 ft²	10
Conditioned ft²	562.0		

ROOM_01_100A_CORR_R02

Conditions at Time of Cooling Peak

Outside	DB / WB / HR	84.6 °F	/	72.2 °F	/	99.5 gr/lb
Room	DB / RH / HR	81.0 °F	/	39.9 %	/	62.8 gr/lb

	Instant Sensible (Btu/h)	Time Delay Sensible (Btu/h)	Latent (Btu/h)	Total (Btu/h)	Percent of Total (%)
Roof	0	0	0	0	0.0
Other Roof	0	0	0	0	0.0
Glass	-46	43	0	-3	-0.6
Door	0	-30	0	-30	-6.2
Wall	0	0	0	0	0.0
Below-Grade Wall	0	0	0	0	0.0
Other Wall	0	0	0	0	0.0
Partition	0	-102	0	-102	-21.3
Exterior Floor	0	0	0	0	0.0
Interior Floor	0	0	0	0	0.0
Slab	0	-3	0	-3	-0.6
Other Floor	0	0	0	0	0.0
Infiltration	0	0	0	0	0.0
Envelope Subtotal	-46	-92	0	-138	-
People	0	0	0	0	0.0
Lights	196	178	0	374	77.9
RA Sensible (Lights)	225	0	0	225	46.9
Miscellaneous Loads	0	0	0	0	0.0
Internal Subtotal	421	178	0	598	-
RA (All Other)	0	0	0	0	0.0
DOA Direct to Room	0	0	0	0	0.0
Ceiling	0	26	0	26	5.5
Refrigeration	0	0	0	0	0.0
Service Water	0	0	0	0	0.0
HVAC Equipment Losses	0	0	0	0	0.0
Adj Air Transfer Heat	0	0	0	0	0.0
Sizing Factor Correction	0	0	0	0	0.0
Time Delay Correction	0	-8	0	-8	-1.7
Grand Total	375	104	0	479	100.0

Engineering Checks

Cooling tons	0.04	Input Ventilation cfm	19
Cooling cfm	214.80	Calculated Ventilation cfm	33
ft²/ton	8068.11	Number of People	0.00
cfm/ton	5,377.76	People per 1000 ft²	0
Conditioned ft²	322.2		

Conditions at Time of Heating Peak

Outside	DB / WB / HR	32.0 °F	/	32.0 °F	/	0.0 gr/lb
Room	DB / RH / HR	32.0 °F	/	0.0 %	/	0.0 gr/lb

	Instant Sensible (Btu/h)	Time Delay Sensible (Btu/h)	Latent (Btu/h)	Total (Btu/h)	Percent of Total (%)
Roof	0	0	0	0	0.0
Other Roof	0	0	0	0	0.0
Glass	0	0	0	0	0.0
Door	0	0	0	0	0.0
Wall	0	0	0	0	0.0
Below-Grade Wall	0	0	0	0	0.0
Other Wall	0	0	0	0	0.0
Partition	0	0	0	0	0.0
Exterior Floor	0	0	0	0	0.0
Interior Floor	0	0	0	0	0.0
Slab	0	0	0	0	0.0
Other Floor	0	0	0	0	0.0
Infiltration	0	0	0	0	0.0
Envelope Subtotal	0	0	0	0	-
People	0	0	0	0	0.0
Lights	0	0	0	0	0.0
RA Sensible (Lights)	0	0	0	0	0.0
Miscellaneous Loads	0	0	0	0	0.0
Internal Subtotal	0	0	0	0	-
RA (All Other)	0	0	0	0	0.0
DOA Direct to Room	0	0	0	0	0.0
Ceiling	0	0	0	0	0.0
Refrigeration	0	0	0	0	0.0
Service Water	0	0	0	0	0.0
HVAC Equipment Losses	0	0	0	0	0.0
Adj Air Transfer Heat	0	0	0	0	0.0
Sizing Factor Correction	0	0	0	0	0.0
Time Delay Correction	0	0	0	0	0.0
Grand Total	0	0	0	0	100.0

Engineering Checks

Heating Mbh	0.00	Input Ventilation cfm	19
Heating cfm	64.44	Calculated Ventilation cfm	18
ft²/Mbh	0.00	Number of People	0.00
cfm/Mbh	0.00	People per 1000 ft²	0
Conditioned ft²	322.2		

ROOM_01_101_RECEPTION_R02

Conditions at Time of Cooling Peak

Outside	DB / WB / HR	83.2 °F	/	71.0 °F	/	95.0 gr/lb
Room	DB / RH / HR	75.0 °F	/	50.7 %	/	65.5 gr/lb

	Instant Sensible (Btu/h)	Time Delay Sensible (Btu/h)	Latent (Btu/h)	Total (Btu/h)	Percent of Total (%)
Roof	0	0	0	0	0.0
Other Roof	0	0	0	0	0.0
Glass	714	987	0	1701	65.3
Door	0	0	0	0	0.0
Wall	0	170	0	170	6.5
Below-Grade Wall	0	0	0	0	0.0
Other Wall	0	0	0	0	0.0
Partition	0	-11	0	-11	-0.4
Exterior Floor	0	0	0	0	0.0
Interior Floor	0	0	0	0	0.0
Slab	0	-218	0	-218	-8.3
Other Floor	0	0	0	0	0.0
Infiltration	0	0	0	0	0.0
Envelope Subtotal	714	929	0	1643	-
People	123	162	194	479	18.4
Lights	104	133	0	237	9.1
RA Sensible (Lights)	119	0	0	119	4.6
Miscellaneous Loads	161	100	0	262	10.0
Internal Subtotal	507	396	194	1097	-
RA (All Other)	0	0	0	0	0.0
DOA Direct to Room	0	0	0	0	0.0
Ceiling	0	-50	0	-50	-1.9
Refrigeration	0	0	0	0	0.0
Service Water	0	0	0	0	0.0
HVAC Equipment Losses	0	0	0	0	0.0
Adj Air Transfer Heat	0	0	0	0	0.0
Sizing Factor Correction	0	0	0	0	0.0
Time Delay Correction	0	-84	0	-84	-3.2
Grand Total	1221	1191	194	2607	100.0

Engineering Checks

Cooling tons	0.22	Input Ventilation cfm	14
Cooling cfm	298.96	Calculated Ventilation cfm	64
ft²/ton	576.32	Number of People	1.25
cfm/ton	1,375.96	People per 1000 ft²	10
Conditioned ft²	125.2		

Conditions at Time of Heating Peak

Outside	DB / WB / HR	16.4 °F	/	12.6 °F	/	5.3 gr/lb
Room	DB / RH / HR	70.0 °F	/	4.9 %	/	5.2 gr/lb

	Instant Sensible (Btu/h)	Time Delay Sensible (Btu/h)	Latent (Btu/h)	Total (Btu/h)	Percent of Total (%)
Roof	0	0	0	0	0.0
Other Roof	0	0	0	0	0.0
Glass	-2189	0	0	-2189	90.7
Door	0	0	0	0	0.0
Wall	0	-145	0	-145	6.0
Below-Grade Wall	0	0	0	0	0.0
Other Wall	0	0	0	0	0.0
Partition	0	68	0	68	-2.8
Exterior Floor	0	0	0	0	0.0
Interior Floor	0	0	0	0	0.0
Slab	0	-1	0	-1	0.0
Other Floor	0	0	0	0	0.0
Infiltration	0	0	0	0	0.0
Envelope Subtotal	-2189	-78	0	-2267	-
People	0	0	0	0	0.0
Lights	0	0	0	0	0.0
RA Sensible (Lights)	0	0	0	0	0.0
Miscellaneous Loads	0	0	0	0	0.0
Internal Subtotal	0	0	0	0	-
RA (All Other)	0	0	0	0	0.0
DOA Direct to Room	0	0	0	0	0.0
Ceiling	0	-147	0	-147	6.1
Refrigeration	0	0	0	0	0.0
Service Water	0	0	0	0	0.0
HVAC Equipment Losses	0	0	0	0	0.0
Adj Air Transfer Heat	0	0	0	0	0.0
Sizing Factor Correction	0	0	0	0	0.0
Time Delay Correction	0	0	0	0	0.0
Grand Total	-2189	-225	0	-2414	100.0

Engineering Checks

Heating Mbh	-2.41	Input Ventilation cfm	14
Heating cfm	89.69	Calculated Ventilation cfm	25
ft²/Mbh	-51.86	Number of People	1.25
cfm/Mbh	-37.16	People per 1000 ft²	10
Conditioned ft²	125.2		

ROOM_01_102_VESTIBULE

Conditions at Time of Cooling Peak

Outside	DB / WB / HR	90.7 °F	/	73.9 °F	/	99.5 gr/lb
Room	DB / RH / HR	81.0 °F	/	39.9 %	/	62.8 gr/lb

	Instant Sensible (Btu/h)	Time Delay Sensible (Btu/h)	Latent (Btu/h)	Total (Btu/h)	Percent of Total (%)
Roof	0	0	0	0	0.0
Other Roof	0	0	0	0	0.0
Glass	413	263	0	676	120.7
Door	0	-39	0	-39	-6.9
Wall	0	45	0	45	8.0
Below-Grade Wall	0	0	0	0	0.0
Other Wall	0	0	0	0	0.0
Partition	0	-100	0	-100	-17.9
Exterior Floor	0	0	0	0	0.0
Interior Floor	0	0	0	0	0.0
Slab	0	-156	0	-156	-27.8
Other Floor	0	0	0	0	0.0
Infiltration	0	0	0	0	0.0
Envelope Subtotal	413	14	0	426	-
People	0	0	0	0	0.0
Lights	52	67	0	119	21.2
RA Sensible (Lights)	59	0	0	59	10.6
Miscellaneous Loads	0	0	0	0	0.0
Internal Subtotal	111	67	0	178	-
RA (All Other)	0	0	0	0	0.0
DOA Direct to Room	0	0	0	0	0.0
Ceiling	0	-42	0	-42	-7.6
Refrigeration	0	0	0	0	0.0
Service Water	0	0	0	0	0.0
HVAC Equipment Losses	0	0	0	0	0.0
Adj Air Transfer Heat	0	0	0	0	0.0
Sizing Factor Correction	0	0	0	0	0.0
Time Delay Correction	0	-2	0	-2	-0.3
Grand Total	523	37	0	560	100.0

Engineering Checks

Cooling tons	0.05	Input Ventilation cfm	0
Cooling cfm	0.00	Calculated Ventilation cfm	0
ft²/ton	1819.59	Number of People	0.00
cfm/ton	0.00	People per 1000 ft²	0
Conditioned ft²	84.9		

Conditions at Time of Heating Peak

Outside	DB / WB / HR	16.4 °F	/	12.6 °F	/	5.3 gr/lb
Room	DB / RH / HR	70.0 °F	/	4.9 %	/	5.2 gr/lb

	Instant Sensible (Btu/h)	Time Delay Sensible (Btu/h)	Latent (Btu/h)	Total (Btu/h)	Percent of Total (%)
Roof	0	0	0	0	0.0
Other Roof	0	0	0	0	0.0
Glass	-1397	0	0	-1397	87.5
Door	0	42	0	42	-2.6
Wall	0	-126	0	-126	7.9
Below-Grade Wall	0	0	0	0	0.0
Other Wall	0	0	0	0	0.0
Partition	0	-19	0	-19	1.2
Exterior Floor	0	0	0	0	0.0
Interior Floor	0	0	0	0	0.0
Slab	0	-1	0	-1	0.1
Other Floor	0	0	0	0	0.0
Infiltration	0	0	0	0	0.0
Envelope Subtotal	-1397	-104	0	-1501	-
People	0	0	0	0	0.0
Lights	0	0	0	0	0.0
RA Sensible (Lights)	0	0	0	0	0.0
Miscellaneous Loads	0	0	0	0	0.0
Internal Subtotal	0	0	0	0	-
RA (All Other)	0	0	0	0	0.0
DOA Direct to Room	0	0	0	0	0.0
Ceiling	0	-95	0	-95	6.0
Refrigeration	0	0	0	0	0.0
Service Water	0	0	0	0	0.0
HVAC Equipment Losses	0	0	0	0	0.0
Adj Air Transfer Heat	0	0	0	0	0.0
Sizing Factor Correction	0	0	0	0	0.0
Time Delay Correction	0	0	0	0	0.0
Grand Total	-1397	-199	0	-1596	100.0

Engineering Checks

Heating Mbh	-1.60	Input Ventilation cfm	0
Heating cfm	59.30	Calculated Ventilation cfm	0
ft²/Mbh	-53.22	Number of People	0.00
cfm/Mbh	-37.15	People per 1000 ft²	0
Conditioned ft²	84.9		

ROOM_01_103_WAITING AREA_R02

Conditions at Time of Cooling Peak

Outside	DB / WB / HR	83.2 °F	/	71.0 °F	/	95.0 gr/lb
Room	DB / RH / HR	75.0 °F	/	50.8 %	/	65.7 gr/lb

	Instant Sensible (Btu/h)	Time Delay Sensible (Btu/h)	Latent (Btu/h)	Total (Btu/h)	Percent of Total (%)
Roof	0	0	0	0	0.0
Other Roof	0	0	0	0	0.0
Glass	791	1018	0	1809	69.7
Door	0	0	0	0	0.0
Wall	0	8	0	8	0.3
Below-Grade Wall	0	0	0	0	0.0
Other Wall	0	0	0	0	0.0
Partition	0	-36	0	-36	-1.4
Exterior Floor	0	0	0	0	0.0
Interior Floor	0	0	0	0	0.0
Slab	0	-191	0	-191	-7.4
Other Floor	0	0	0	0	0.0
Infiltration	0	0	0	0	0.0
Envelope Subtotal	791	799	0	1590	-
People	130	169	205	504	19.4
Lights	110	139	0	249	9.6
RA Sensible (Lights)	126	0	0	126	4.9
Miscellaneous Loads	171	105	0	275	10.6
Internal Subtotal	537	412	205	1154	-
RA (All Other)	0	0	0	0	0.0
DOA Direct to Room	0	0	0	0	0.0
Ceiling	0	-58	0	-58	-2.2
Refrigeration	0	0	0	0	0.0
Service Water	0	0	0	0	0.0
HVAC Equipment Losses	0	0	0	0	0.0
Adj Air Transfer Heat	0	0	0	0	0.0
Sizing Factor Correction	0	0	0	0	0.0
Time Delay Correction	0	-89	0	-89	-3.4
Grand Total	1328	1065	205	2598	100.0

Engineering Checks

Cooling tons	0.22	Input Ventilation cfm	15
Cooling cfm	313.77	Calculated Ventilation cfm	67
ft²/ton	611.63	Number of People	1.32
cfm/ton	1,449.09	People per 1000 ft²	10
Conditioned ft²	132.4		

Conditions at Time of Heating Peak

Outside	DB / WB / HR	16.4 °F	/	12.6 °F	/	5.3 gr/lb
Room	DB / RH / HR	70.0 °F	/	4.9 %	/	5.2 gr/lb

	Instant Sensible (Btu/h)	Time Delay Sensible (Btu/h)	Latent (Btu/h)	Total (Btu/h)	Percent of Total (%)
Roof	0	0	0	0	0.0
Other Roof	0	0	0	0	0.0
Glass	-2301	0	0	-2301	90.8
Door	0	0	0	0	0.0
Wall	0	-145	0	-145	5.7
Below-Grade Wall	0	0	0	0	0.0
Other Wall	0	0	0	0	0.0
Partition	0	69	0	69	-2.7
Exterior Floor	0	0	0	0	0.0
Interior Floor	0	0	0	0	0.0
Slab	0	-1	0	-1	0.0
Other Floor	0	0	0	0	0.0
Infiltration	0	0	0	0	0.0
Envelope Subtotal	-2301	-77	0	-2378	-
People	0	0	0	0	0.0
Lights	0	0	0	0	0.0
RA Sensible (Lights)	0	0	0	0	0.0
Miscellaneous Loads	0	0	0	0	0.0
Internal Subtotal	0	0	0	0	-
RA (All Other)	0	0	0	0	0.0
DOA Direct to Room	0	0	0	0	0.0
Ceiling	0	-155	0	-155	6.1
Refrigeration	0	0	0	0	0.0
Service Water	0	0	0	0	0.0
HVAC Equipment Losses	0	0	0	0	0.0
Adj Air Transfer Heat	0	0	0	0	0.0
Sizing Factor Correction	0	0	0	0	0.0
Time Delay Correction	0	0	0	0	0.0
Grand Total	-2301	-232	0	-2533	100.0

Engineering Checks

Heating Mbh	-2.53	Input Ventilation cfm	15
Heating cfm	94.13	Calculated Ventilation cfm	27
ft²/Mbh	-52.26	Number of People	1.32
cfm/Mbh	-37.16	People per 1000 ft²	10
Conditioned ft²	132.4		

ROOM_01_104_ELEV MACH

Conditions at Time of Cooling Peak

Outside	DB / WB / HR	82.5 °F	/	71.6 °F	/	99.4 gr/lb
Room	DB / RH / HR	81.0 °F	/	39.9 %	/	62.8 gr/lb

	Instant Sensible (Btu/h)	Time Delay Sensible (Btu/h)	Latent (Btu/h)	Total (Btu/h)	Percent of Total (%)
Roof	0	0	0	0	0.0
Other Roof	0	0	0	0	0.0
Glass	0	0	0	0	0.0
Door	0	-465	0	-465	-2.7
Wall	0	0	0	0	0.0
Below-Grade Wall	0	0	0	0	0.0
Other Wall	0	0	0	0	0.0
Partition	0	-7381	0	-7381	-42.4
Exterior Floor	0	0	0	0	0.0
Interior Floor	0	0	0	0	0.0
Slab	0	-578	0	-578	-3.3
Other Floor	0	0	0	0	0.0
Infiltration	0	0	0	0	0.0
Envelope Subtotal	0	-8424	0	-8424	-
People	0	0	0	0	0.0
Lights	27	69	0	96	0.6
RA Sensible (Lights)	30	0	0	30	0.2
Miscellaneous Loads	10270	17207	0	27477	157.9
Internal Subtotal	10327	17276	0	27603	-
RA (All Other)	0	0	0	0	0.0
DOA Direct to Room	0	0	0	0	0.0
Ceiling	0	-1776	0	-1776	-10.2
Refrigeration	0	0	0	0	0.0
Service Water	0	0	0	0	0.0
HVAC Equipment Losses	0	0	0	0	0.0
Adj Air Transfer Heat	0	0	0	0	0.0
Sizing Factor Correction	0	0	0	0	0.0
Time Delay Correction	0	0	0	0	0.0
Grand Total	10327	7076	0	17403	100.0

Engineering Checks

Cooling tons	1.45	Input Ventilation cfm	611
Cooling cfm	611.37	Calculated Ventilation cfm	0
ft²/ton	47.28	Number of People	0.00
cfm/ton	421.47	People per 1000 ft²	0
Conditioned ft²	68.6		

Conditions at Time of Heating Peak

Outside	DB / WB / HR	32.0 °F	/	32.0 °F	/	0.0 gr/lb
Room	DB / RH / HR	32.0 °F	/	0.0 %	/	0.0 gr/lb

	Instant Sensible (Btu/h)	Time Delay Sensible (Btu/h)	Latent (Btu/h)	Total (Btu/h)	Percent of Total (%)
Roof	0	0	0	0	0.0
Other Roof	0	0	0	0	0.0
Glass	0	0	0	0	0.0
Door	0	0	0	0	0.0
Wall	0	0	0	0	0.0
Below-Grade Wall	0	0	0	0	0.0
Other Wall	0	0	0	0	0.0
Partition	0	0	0	0	0.0
Exterior Floor	0	0	0	0	0.0
Interior Floor	0	0	0	0	0.0
Slab	0	0	0	0	0.0
Other Floor	0	0	0	0	0.0
Infiltration	0	0	0	0	0.0
Envelope Subtotal	0	0	0	0	-
People	0	0	0	0	0.0
Lights	0	0	0	0	0.0
RA Sensible (Lights)	0	0	0	0	0.0
Miscellaneous Loads	0	0	0	0	0.0
Internal Subtotal	0	0	0	0	-
RA (All Other)	0	0	0	0	0.0
DOA Direct to Room	0	0	0	0	0.0
Ceiling	0	0	0	0	0.0
Refrigeration	0	0	0	0	0.0
Service Water	0	0	0	0	0.0
HVAC Equipment Losses	0	0	0	0	0.0
Adj Air Transfer Heat	0	0	0	0	0.0
Sizing Factor Correction	0	0	0	0	0.0
Time Delay Correction	0	0	0	0	0.0
Grand Total	0	0	0	0	100.0

Engineering Checks

Heating Mbh	0.00	Input Ventilation cfm	611
Heating cfm	611.37	Calculated Ventilation cfm	0
ft²/Mbh	0.00	Number of People	0.00
cfm/Mbh	0.00	People per 1000 ft²	0
Conditioned ft²	68.6		

ROOM_01_105_FURNITURE ST_R02

Conditions at Time of Cooling Peak

Outside	DB / WB / HR	82.5 °F	/	71.6 °F	/	99.4 gr/lb
Room	DB / RH / HR	81.0 °F	/	39.9 %	/	62.8 gr/lb

	Instant Sensible (Btu/h)	Time Delay Sensible (Btu/h)	Latent (Btu/h)	Total (Btu/h)	Percent of Total (%)
Roof	0	0	0	0	0.0
Other Roof	0	0	0	0	0.0
Glass	0	0	0	0	0.0
Door	0	-21	0	-21	-2.1
Wall	0	0	0	0	0.0
Below-Grade Wall	0	0	0	0	0.0
Other Wall	0	0	0	0	0.0
Partition	0	489	0	489	49.8
Exterior Floor	0	0	0	0	0.0
Interior Floor	0	0	0	0	0.0
Slab	0	-8	0	-8	-0.8
Other Floor	0	0	0	0	0.0
Infiltration	0	0	0	0	0.0
Envelope Subtotal	0	460	0	460	-
People	0	0	0	0	0.0
Lights	69	124	0	194	19.7
RA Sensible (Lights)	80	0	0	80	8.1
Miscellaneous Loads	154	118	0	273	27.8
Internal Subtotal	304	243	0	546	-
RA (All Other)	0	0	0	0	0.0
DOA Direct to Room	0	0	0	0	0.0
Ceiling	0	-25	0	-25	-2.5
Refrigeration	0	0	0	0	0.0
Service Water	0	0	0	0	0.0
HVAC Equipment Losses	0	0	0	0	0.0
Adj Air Transfer Heat	0	0	0	0	0.0
Sizing Factor Correction	0	0	0	0	0.0
Time Delay Correction	0	0	0	0	0.0
Grand Total	304	678	0	982	100.0

Engineering Checks

Cooling tons	0.08	Input Ventilation cfm	7
Cooling cfm	79.82	Calculated Ventilation cfm	12
ft²/ton	1463.22	Number of People	0.00
cfm/ton	975.43	People per 1000 ft²	0
Conditioned ft²	119.7		

Conditions at Time of Heating Peak

Outside	DB / WB / HR	32.0 °F	/	32.0 °F	/	0.0 gr/lb
Room	DB / RH / HR	32.0 °F	/	0.0 %	/	0.0 gr/lb

	Instant Sensible (Btu/h)	Time Delay Sensible (Btu/h)	Latent (Btu/h)	Total (Btu/h)	Percent of Total (%)
Roof	0	0	0	0	0.0
Other Roof	0	0	0	0	0.0
Glass	0	0	0	0	0.0
Door	0	0	0	0	0.0
Wall	0	0	0	0	0.0
Below-Grade Wall	0	0	0	0	0.0
Other Wall	0	0	0	0	0.0
Partition	0	0	0	0	0.0
Exterior Floor	0	0	0	0	0.0
Interior Floor	0	0	0	0	0.0
Slab	0	0	0	0	0.0
Other Floor	0	0	0	0	0.0
Infiltration	0	0	0	0	0.0
Envelope Subtotal	0	0	0	0	-
People	0	0	0	0	0.0
Lights	0	0	0	0	0.0
RA Sensible (Lights)	0	0	0	0	0.0
Miscellaneous Loads	0	0	0	0	0.0
Internal Subtotal	0	0	0	0	-
RA (All Other)	0	0	0	0	0.0
DOA Direct to Room	0	0	0	0	0.0
Ceiling	0	0	0	0	0.0
Refrigeration	0	0	0	0	0.0
Service Water	0	0	0	0	0.0
HVAC Equipment Losses	0	0	0	0	0.0
Adj Air Transfer Heat	0	0	0	0	0.0
Sizing Factor Correction	0	0	0	0	0.0
Time Delay Correction	0	0	0	0	0.0
Grand Total	0	0	0	0	100.0

Engineering Checks

Heating Mbh	0.00	Input Ventilation cfm	7
Heating cfm	23.95	Calculated Ventilation cfm	7
ft²/Mbh	0.00	Number of People	0.00
cfm/Mbh	0.00	People per 1000 ft²	0
Conditioned ft²	119.7		

ROOM_01_106_STORAGE_R02

Conditions at Time of Cooling Peak

Outside	DB / WB / HR	82.5 °F	/	71.6 °F	/	99.4 gr/lb
Room	DB / RH / HR	81.0 °F	/	39.9 %	/	62.8 gr/lb

	Instant Sensible (Btu/h)	Time Delay Sensible (Btu/h)	Latent (Btu/h)	Total (Btu/h)	Percent of Total (%)
Roof	0	0	0	0	0.0
Other Roof	0	0	0	0	0.0
Glass	0	0	0	0	0.0
Door	0	-6	0	-6	-5.2
Wall	0	0	0	0	0.0
Below-Grade Wall	0	0	0	0	0.0
Other Wall	0	0	0	0	0.0
Partition	0	-93	0	-93	-77.1
Exterior Floor	0	0	0	0	0.0
Interior Floor	0	0	0	0	0.0
Slab	0	-3	0	-3	-2.6
Other Floor	0	0	0	0	0.0
Infiltration	0	0	0	0	0.0
Envelope Subtotal	0	-102	0	-102	-
People	0	0	0	0	0.0
Lights	26	47	0	74	61.3
RA Sensible (Lights)	30	0	0	30	25.2
Miscellaneous Loads	59	45	0	104	86.3
Internal Subtotal	115	92	0	208	-
RA (All Other)	0	0	0	0	0.0
DOA Direct to Room	0	0	0	0	0.0
Ceiling	0	15	0	15	12.1
Refrigeration	0	0	0	0	0.0
Service Water	0	0	0	0	0.0
HVAC Equipment Losses	0	0	0	0	0.0
Adj Air Transfer Heat	0	0	0	0	0.0
Sizing Factor Correction	0	0	0	0	0.0
Time Delay Correction	0	0	0	0	0.0
Grand Total	115	5	0	120	100.0

Engineering Checks

Cooling tons	0.01	Input Ventilation cfm	3
Cooling cfm	30.32	Calculated Ventilation cfm	5
ft²/ton	4546.73	Number of People	0.00
cfm/ton	3,026.97	People per 1000 ft²	0
Conditioned ft²	45.5		

Conditions at Time of Heating Peak

Outside	DB / WB / HR	16.4 °F	/	12.6 °F	/	5.3 gr/lb
Room	DB / RH / HR	70.0 °F	/	4.9 %	/	5.2 gr/lb

	Instant Sensible (Btu/h)	Time Delay Sensible (Btu/h)	Latent (Btu/h)	Total (Btu/h)	Percent of Total (%)
Roof	0	0	0	0	0.0
Other Roof	0	0	0	0	0.0
Glass	0	0	0	0	0.0
Door	0	-6	0	-6	8.1
Wall	0	0	0	0	0.0
Below-Grade Wall	0	0	0	0	0.0
Other Wall	0	0	0	0	0.0
Partition	0	-46	0	-46	66.0
Exterior Floor	0	0	0	0	0.0
Interior Floor	0	0	0	0	0.0
Slab	0	0	0	0	0.2
Other Floor	0	0	0	0	0.0
Infiltration	0	0	0	0	0.0
Envelope Subtotal	0	-51	0	-51	-
People	0	0	0	0	0.0
Lights	0	0	0	0	0.0
RA Sensible (Lights)	0	0	0	0	0.0
Miscellaneous Loads	0	0	0	0	0.0
Internal Subtotal	0	0	0	0	-
RA (All Other)	0	0	0	0	0.0
DOA Direct to Room	0	0	0	0	0.0
Ceiling	0	-18	0	-18	25.8
Refrigeration	0	0	0	0	0.0
Service Water	0	0	0	0	0.0
HVAC Equipment Losses	0	0	0	0	0.0
Adj Air Transfer Heat	0	0	0	0	0.0
Sizing Factor Correction	0	0	0	0	0.0
Time Delay Correction	0	0	0	0	0.0
Grand Total	0	-69	0	-69	100.0

Engineering Checks

Heating Mbh	-0.07	Input Ventilation cfm	3
Heating cfm	9.10	Calculated Ventilation cfm	3
ft²/Mbh	-656.51	Number of People	0.00
cfm/Mbh	-131.15	People per 1000 ft²	0
Conditioned ft²	45.5		

ROOM_01_110A_CORR_R02

Conditions at Time of Cooling Peak

Outside	DB / WB / HR	83.9 °F	/	71.2 °F	/	95.0 gr/lb
Room	DB / RH / HR	81.0 °F	/	39.9 %	/	62.8 gr/lb

	Instant Sensible (Btu/h)	Time Delay Sensible (Btu/h)	Latent (Btu/h)	Total (Btu/h)	Percent of Total (%)
Roof	0	0	0	0	0.0
Other Roof	0	0	0	0	0.0
Glass	500	927	0	1427	119.7
Door	0	0	0	0	0.0
Wall	0	0	0	0	0.0
Below-Grade Wall	0	0	0	0	0.0
Other Wall	0	0	0	0	0.0
Partition	0	-318	0	-318	-26.7
Exterior Floor	0	0	0	0	0.0
Interior Floor	0	0	0	0	0.0
Slab	0	-233	0	-233	-19.5
Other Floor	0	0	0	0	0.0
Infiltration	0	0	0	0	0.0
Envelope Subtotal	500	376	0	876	-
People	0	0	0	0	0.0
Lights	131	157	0	288	24.1
RA Sensible (Lights)	150	0	0	150	12.6
Miscellaneous Loads	0	0	0	0	0.0
Internal Subtotal	281	157	0	438	-
RA (All Other)	0	0	0	0	0.0
DOA Direct to Room	0	0	0	0	0.0
Ceiling	0	-88	0	-88	-7.4
Refrigeration	0	0	0	0	0.0
Service Water	0	0	0	0	0.0
HVAC Equipment Losses	0	0	0	0	0.0
Adj Air Transfer Heat	0	0	0	0	0.0
Sizing Factor Correction	0	0	0	0	0.0
Time Delay Correction	0	-34	0	-34	-2.9
Grand Total	781	411	0	1192	100.0

Engineering Checks

Cooling tons	0.10	Input Ventilation cfm	13
Cooling cfm	143.56	Calculated Ventilation cfm	31
ft²/ton	2168.61	Number of People	0.00
cfm/ton	1,445.00	People per 1000 ft²	0
Conditioned ft²	215.4		

Conditions at Time of Heating Peak

Outside	DB / WB / HR	16.4 °F	/	12.6 °F	/	5.3 gr/lb
Room	DB / RH / HR	70.0 °F	/	4.9 %	/	5.2 gr/lb

	Instant Sensible (Btu/h)	Time Delay Sensible (Btu/h)	Latent (Btu/h)	Total (Btu/h)	Percent of Total (%)
Roof	0	0	0	0	0.0
Other Roof	0	0	0	0	0.0
Glass	-969	0	0	-969	113.2
Door	0	0	0	0	0.0
Wall	0	0	0	0	0.0
Below-Grade Wall	0	0	0	0	0.0
Other Wall	0	0	0	0	0.0
Partition	0	267	0	267	-31.2
Exterior Floor	0	0	0	0	0.0
Interior Floor	0	0	0	0	0.0
Slab	0	-2	0	-2	0.2
Other Floor	0	0	0	0	0.0
Infiltration	0	0	0	0	0.0
Envelope Subtotal	-969	265	0	-704	-
People	0	0	0	0	0.0
Lights	0	0	0	0	0.0
RA Sensible (Lights)	0	0	0	0	0.0
Miscellaneous Loads	0	0	0	0	0.0
Internal Subtotal	0	0	0	0	-
RA (All Other)	0	0	0	0	0.0
DOA Direct to Room	0	0	0	0	0.0
Ceiling	0	-152	0	-152	17.8
Refrigeration	0	0	0	0	0.0
Service Water	0	0	0	0	0.0
HVAC Equipment Losses	0	0	0	0	0.0
Adj Air Transfer Heat	0	0	0	0	0.0
Sizing Factor Correction	0	0	0	0	0.0
Time Delay Correction	0	0	0	0	0.0
Grand Total	-969	113	0	-856	100.0

Engineering Checks

Heating Mbh	-0.86	Input Ventilation cfm	13
Heating cfm	43.07	Calculated Ventilation cfm	12
ft²/Mbh	-251.55	Number of People	0.00
cfm/Mbh	-50.29	People per 1000 ft²	0
Conditioned ft²	215.4		

ROOM_01_110A_OPEN OFFICE_R02

Conditions at Time of Cooling Peak

Outside	DB / WB / HR	87.8 °F	/	73.1 °F	/	99.5 gr/lb
Room	DB / RH / HR	75.0 °F	/	52.1 %	/	67.4 gr/lb

	Instant Sensible (Btu/h)	Time Delay Sensible (Btu/h)	Latent (Btu/h)	Total (Btu/h)	Percent of Total (%)
Roof	0	0	0	0	0.0
Other Roof	0	0	0	0	0.0
Glass	5332	8027	0	13358	50.1
Door	0	0	0	0	0.0
Wall	0	-47	0	-47	-0.2
Below-Grade Wall	0	0	0	0	0.0
Other Wall	0	0	0	0	0.0
Partition	0	-330	0	-330	-1.2
Exterior Floor	0	0	0	0	0.0
Interior Floor	0	0	0	0	0.0
Slab	0	-2869	0	-2869	-10.8
Other Floor	0	0	0	0	0.0
Infiltration	0	0	0	0	0.0
Envelope Subtotal	5332	4780	0	10112	-
People	1386	2679	3299	7364	27.6
Lights	588	1264	0	1853	7.0
RA Sensible (Lights)	676	0	0	676	2.5
Miscellaneous Loads	6248	6786	0	13034	48.9
Internal Subtotal	8898	10730	3299	22926	-
RA (All Other)	0	0	0	0	0.0
DOA Direct to Room	0	0	0	0	0.0
Ceiling	0	-2960	0	-2960	-11.1
Refrigeration	0	0	0	0	0.0
Service Water	0	0	0	0	0.0
HVAC Equipment Losses	0	0	0	0	0.0
Adj Air Transfer Heat	0	0	0	0	0.0
Sizing Factor Correction	0	0	0	0	0.0
Time Delay Correction	0	-3428	0	-3428	-12.9
Grand Total	14229	9122	3299	26651	100.0

Engineering Checks

Cooling tons	2.22	Input Ventilation cfm	99
Cooling cfm	1,101.19	Calculated Ventilation cfm	234
ft²/ton	293.49	Number of People	11.99
cfm/ton	495.74	People per 1000 ft²	18
Conditioned ft²	651.8		

Conditions at Time of Heating Peak

Outside	DB / WB / HR	16.4 °F	/	12.6 °F	/	5.3 gr/lb
Room	DB / RH / HR	70.0 °F	/	4.9 %	/	5.2 gr/lb

	Instant Sensible (Btu/h)	Time Delay Sensible (Btu/h)	Latent (Btu/h)	Total (Btu/h)	Percent of Total (%)
Roof	0	0	0	0	0.0
Other Roof	0	0	0	0	0.0
Glass	-6838	0	0	-6838	86.2
Door	0	0	0	0	0.0
Wall	0	-618	0	-618	7.8
Below-Grade Wall	0	0	0	0	0.0
Other Wall	0	0	0	0	0.0
Partition	0	73	0	73	-0.9
Exterior Floor	0	0	0	0	0.0
Interior Floor	0	0	0	0	0.0
Slab	0	-5	0	-5	0.1
Other Floor	0	0	0	0	0.0
Infiltration	0	0	0	0	0.0
Envelope Subtotal	-6838	-549	0	-7387	-
People	0	0	0	0	0.0
Lights	0	0	0	0	0.0
RA Sensible (Lights)	0	0	0	0	0.0
Miscellaneous Loads	0	0	0	0	0.0
Internal Subtotal	0	0	0	0	-
RA (All Other)	0	0	0	0	0.0
DOA Direct to Room	0	0	0	0	0.0
Ceiling	0	-541	0	-541	6.8
Refrigeration	0	0	0	0	0.0
Service Water	0	0	0	0	0.0
HVAC Equipment Losses	0	0	0	0	0.0
Adj Air Transfer Heat	0	0	0	0	0.0
Sizing Factor Correction	0	0	0	0	0.0
Time Delay Correction	0	0	0	0	0.0
Grand Total	-6838	-1091	0	-7928	100.0

Engineering Checks

Heating Mbh	-7.93	Input Ventilation cfm	99
Heating cfm	330.36	Calculated Ventilation cfm	93
ft²/Mbh	-82.21	Number of People	11.99
cfm/Mbh	-41.67	People per 1000 ft²	18
Conditioned ft²	651.8		

ROOM_01_110B_OPEN OFFICE_R02

Conditions at Time of Cooling Peak

Outside	DB / WB / HR	83.2 °F	/	71.0 °F	/	95.0 gr/lb
Room	DB / RH / HR	75.0 °F	/	53.0 %	/	68.5 gr/lb

	Instant Sensible (Btu/h)	Time Delay Sensible (Btu/h)	Latent (Btu/h)	Total (Btu/h)	Percent of Total (%)
Roof	0	0	0	0	0.0
Other Roof	0	0	0	0	0.0
Glass	1545	1089	0	2634	16.4
Door	0	0	0	0	0.0
Wall	0	65	0	65	0.4
Below-Grade Wall	0	0	0	0	0.0
Other Wall	0	0	0	0	0.0
Partition	0	-47	0	-47	-0.3
Exterior Floor	0	0	0	0	0.0
Interior Floor	0	0	0	0	0.0
Slab	0	-429	0	-429	-2.7
Other Floor	0	0	0	0	0.0
Infiltration	0	0	0	0	0.0
Envelope Subtotal	1545	677	0	2222	-
People	1260	1429	2399	5088	31.6
Lights	432	498	0	930	5.8
RA Sensible (Lights)	496	0	0	496	3.1
Miscellaneous Loads	5893	3468	0	9360	58.2
Internal Subtotal	8080	5394	2399	15874	-
RA (All Other)	0	0	0	0	0.0
DOA Direct to Room	0	0	0	0	0.0
Ceiling	0	-261	0	-261	-1.6
Refrigeration	0	0	0	0	0.0
Service Water	0	0	0	0	0.0
HVAC Equipment Losses	0	0	0	0	0.0
Adj Air Transfer Heat	0	0	0	0	0.0
Sizing Factor Correction	0	0	0	0	0.0
Time Delay Correction	0	-1756	0	-1756	-10.9
Grand Total	9625	4054	2399	16078	100.0

Engineering Checks

Cooling tons	1.34	Input Ventilation cfm	89
Cooling cfm	985.53	Calculated Ventilation cfm	209
ft²/ton	357.06	Number of People	12.01
cfm/ton	735.42	People per 1000 ft²	25
Conditioned ft²	478.3		

Conditions at Time of Heating Peak

Outside	DB / WB / HR	16.4 °F	/	12.6 °F	/	5.3 gr/lb
Room	DB / RH / HR	70.0 °F	/	4.9 %	/	5.2 gr/lb

	Instant Sensible (Btu/h)	Time Delay Sensible (Btu/h)	Latent (Btu/h)	Total (Btu/h)	Percent of Total (%)
Roof	0	0	0	0	0.0
Other Roof	0	0	0	0	0.0
Glass	-2715	0	0	-2715	83.1
Door	0	0	0	0	0.0
Wall	0	-265	0	-265	8.1
Below-Grade Wall	0	0	0	0	0.0
Other Wall	0	0	0	0	0.0
Partition	0	-36	0	-36	1.1
Exterior Floor	0	0	0	0	0.0
Interior Floor	0	0	0	0	0.0
Slab	0	-4	0	-4	0.1
Other Floor	0	0	0	0	0.0
Infiltration	0	0	0	0	0.0
Envelope Subtotal	-2715	-306	0	-3021	-
People	0	0	0	0	0.0
Lights	0	0	0	0	0.0
RA Sensible (Lights)	0	0	0	0	0.0
Miscellaneous Loads	0	0	0	0	0.0
Internal Subtotal	0	0	0	0	-
RA (All Other)	0	0	0	0	0.0
DOA Direct to Room	0	0	0	0	0.0
Ceiling	0	-246	0	-246	7.5
Refrigeration	0	0	0	0	0.0
Service Water	0	0	0	0	0.0
HVAC Equipment Losses	0	0	0	0	0.0
Adj Air Transfer Heat	0	0	0	0	0.0
Sizing Factor Correction	0	0	0	0	0.0
Time Delay Correction	0	0	0	0	0.0
Grand Total	-2715	-551	0	-3267	100.0

Engineering Checks

Heating Mbh	-3.27	Input Ventilation cfm	89
Heating cfm	295.66	Calculated Ventilation cfm	84
ft²/Mbh	-146.45	Number of People	12.01
cfm/Mbh	-90.51	People per 1000 ft²	25
Conditioned ft²	478.3		

ROOM_01_111_CAF_R02

Conditions at Time of Cooling Peak

Outside	DB / WB / HR	90.7 °F	/	73.9 °F	/	99.5 gr/lb
Room	DB / RH / HR	75.0 °F	/	59.2 %	/	76.6 gr/lb

	Instant Sensible (Btu/h)	Time Delay Sensible (Btu/h)	Latent (Btu/h)	Total (Btu/h)	Percent of Total (%)
Roof	0	0	0	0	0.0
Other Roof	0	0	0	0	0.0
Glass	1214	894	0	2108	21.2
Door	0	0	0	0	0.0
Wall	0	104	0	104	1.0
Below-Grade Wall	0	0	0	0	0.0
Other Wall	0	0	0	0	0.0
Partition	0	0	0	0	0.0
Exterior Floor	0	0	0	0	0.0
Interior Floor	0	0	0	0	0.0
Slab	0	-446	0	-446	-4.5
Other Floor	0	0	0	0	0.0
Infiltration	0	0	0	0	0.0
Envelope Subtotal	1214	552	0	1766	-
People	1503	1514	2864	5881	59.1
Lights	526	636	0	1162	11.7
RA Sensible (Lights)	604	0	0	604	6.1
Miscellaneous Loads	599	345	0	944	9.5
Internal Subtotal	3233	2495	2864	8591	-
RA (All Other)	0	0	0	0	0.0
DOA Direct to Room	0	0	0	0	0.0
Ceiling	0	140	0	140	1.4
Refrigeration	0	0	0	0	0.0
Service Water	0	0	0	0	0.0
HVAC Equipment Losses	0	0	0	0	0.0
Adj Air Transfer Heat	0	0	0	0	0.0
Sizing Factor Correction	0	0	0	0	0.0
Time Delay Correction	0	-551	0	-551	-5.5
Grand Total	4447	2637	2864	9947	100.0

Engineering Checks

Cooling tons	0.83	Input Ventilation cfm	99
Cooling cfm	1,105.19	Calculated Ventilation cfm	235
ft²/ton	560.24	Number of People	14.33
cfm/ton	1,333.01	People per 1000 ft²	31
Conditioned ft²	464.4		

Conditions at Time of Heating Peak

Outside	DB / WB / HR	16.4 °F	/	12.6 °F	/	5.3 gr/lb
Room	DB / RH / HR	70.0 °F	/	4.9 %	/	5.2 gr/lb

	Instant Sensible (Btu/h)	Time Delay Sensible (Btu/h)	Latent (Btu/h)	Total (Btu/h)	Percent of Total (%)
Roof	0	0	0	0	0.0
Other Roof	0	0	0	0	0.0
Glass	-2683	0	0	-2683	81.8
Door	0	0	0	0	0.0
Wall	0	-270	0	-270	8.2
Below-Grade Wall	0	0	0	0	0.0
Other Wall	0	0	0	0	0.0
Partition	0	-58	0	-58	1.8
Exterior Floor	0	0	0	0	0.0
Interior Floor	0	0	0	0	0.0
Slab	0	-4	0	-4	0.1
Other Floor	0	0	0	0	0.0
Infiltration	0	0	0	0	0.0
Envelope Subtotal	-2683	-332	0	-3015	-
People	0	0	0	0	0.0
Lights	0	0	0	0	0.0
RA Sensible (Lights)	0	0	0	0	0.0
Miscellaneous Loads	0	0	0	0	0.0
Internal Subtotal	0	0	0	0	-
RA (All Other)	0	0	0	0	0.0
DOA Direct to Room	0	0	0	0	0.0
Ceiling	0	-265	0	-265	8.1
Refrigeration	0	0	0	0	0.0
Service Water	0	0	0	0	0.0
HVAC Equipment Losses	0	0	0	0	0.0
Adj Air Transfer Heat	0	0	0	0	0.0
Sizing Factor Correction	0	0	0	0	0.0
Time Delay Correction	0	0	0	0	0.0
Grand Total	-2683	-598	0	-3281	100.0

Engineering Checks

Heating Mbh	-3.28	Input Ventilation cfm	99
Heating cfm	331.56	Calculated Ventilation cfm	94
ft²/Mbh	-141.55	Number of People	14.33
cfm/Mbh	-101.06	People per 1000 ft²	31
Conditioned ft²	464.4		

ROOM_01_111_OPEN OFFICE_R02

Conditions at Time of Cooling Peak

Outside	DB / WB / HR	82.8 °F	/	71.6 °F	/	99.4 gr/lb
Room	DB / RH / HR	75.0 °F	/	53.3 %	/	68.9 gr/lb

	Instant Sensible (Btu/h)	Time Delay Sensible (Btu/h)	Latent (Btu/h)	Total (Btu/h)	Percent of Total (%)
Roof	0	0	0	0	0.0
Other Roof	0	0	0	0	0.0
Glass	2498	4214	0	6713	32.4
Door	0	0	0	0	0.0
Wall	0	357	0	357	1.7
Below-Grade Wall	0	0	0	0	0.0
Other Wall	0	0	0	0	0.0
Partition	0	-253	0	-253	-1.2
Exterior Floor	0	0	0	0	0.0
Interior Floor	0	0	0	0	0.0
Slab	0	-1085	0	-1085	-5.2
Other Floor	0	0	0	0	0.0
Infiltration	0	0	0	0	0.0
Envelope Subtotal	2498	3232	0	5731	-
People	1386	1478	3299	6163	29.7
Lights	457	639	0	1096	5.3
RA Sensible (Lights)	525	0	0	525	2.5
Miscellaneous Loads	5950	3946	0	9896	47.8
Internal Subtotal	8318	6063	3299	17680	-
RA (All Other)	0	0	0	0	0.0
DOA Direct to Room	0	0	0	0	0.0
Ceiling	0	-1285	0	-1285	-6.2
Refrigeration	0	0	0	0	0.0
Service Water	0	0	0	0	0.0
HVAC Equipment Losses	0	0	0	0	0.0
Adj Air Transfer Heat	0	0	0	0	0.0
Sizing Factor Correction	0	0	0	0	0.0
Time Delay Correction	0	-1404	0	-1404	-6.8
Grand Total	10816	6607	3299	20722	100.0

Engineering Checks

Cooling tons	1.73	Input Ventilation cfm	90
Cooling cfm	1,004.24	Calculated Ventilation cfm	213
ft²/ton	293.24	Number of People	12.00
cfm/ton	581.44	People per 1000 ft²	24
Conditioned ft²	506.3		

Conditions at Time of Heating Peak

Outside	DB / WB / HR	16.4 °F	/	12.6 °F	/	5.3 gr/lb
Room	DB / RH / HR	70.0 °F	/	4.9 %	/	5.2 gr/lb

	Instant Sensible (Btu/h)	Time Delay Sensible (Btu/h)	Latent (Btu/h)	Total (Btu/h)	Percent of Total (%)
Roof	0	0	0	0	0.0
Other Roof	0	0	0	0	0.0
Glass	-4848	0	0	-4848	82.9
Door	0	0	0	0	0.0
Wall	0	-659	0	-659	11.3
Below-Grade Wall	0	0	0	0	0.0
Other Wall	0	0	0	0	0.0
Partition	0	100	0	100	-1.7
Exterior Floor	0	0	0	0	0.0
Interior Floor	0	0	0	0	0.0
Slab	0	-4	0	-4	0.1
Other Floor	0	0	0	0	0.0
Infiltration	0	0	0	0	0.0
Envelope Subtotal	-4848	-563	0	-5412	-
People	0	0	0	0	0.0
Lights	0	0	0	0	0.0
RA Sensible (Lights)	0	0	0	0	0.0
Miscellaneous Loads	0	0	0	0	0.0
Internal Subtotal	0	0	0	0	-
RA (All Other)	0	0	0	0	0.0
DOA Direct to Room	0	0	0	0	0.0
Ceiling	0	-440	0	-440	7.5
Refrigeration	0	0	0	0	0.0
Service Water	0	0	0	0	0.0
HVAC Equipment Losses	0	0	0	0	0.0
Adj Air Transfer Heat	0	0	0	0	0.0
Sizing Factor Correction	0	0	0	0	0.0
Time Delay Correction	0	0	0	0	0.0
Grand Total	-4848	-1003	0	-5851	100.0

Engineering Checks

Heating Mbh	-5.85	Input Ventilation cfm	90
Heating cfm	301.27	Calculated Ventilation cfm	85
ft²/Mbh	-86.54	Number of People	12.00
cfm/Mbh	-51.49	People per 1000 ft²	24
Conditioned ft²	506.3		

ROOM_01_111A_CORR_R01

Conditions at Time of Cooling Peak

Outside	DB / WB / HR	90.7 °F	/	73.9 °F	/	99.5 gr/lb
Room	DB / RH / HR	81.0 °F	/	39.9 %	/	62.8 gr/lb

	Instant Sensible (Btu/h)	Time Delay Sensible (Btu/h)	Latent (Btu/h)	Total (Btu/h)	Percent of Total (%)
Roof	0	0	0	0	0.0
Other Roof	0	0	0	0	0.0
Glass	-63	268	0	205	81.6
Door	0	0	0	0	0.0
Wall	0	0	0	0	0.0
Below-Grade Wall	0	0	0	0	0.0
Other Wall	0	0	0	0	0.0
Partition	0	-125	0	-125	-49.8
Exterior Floor	0	0	0	0	0.0
Interior Floor	0	0	0	0	0.0
Slab	0	-46	0	-46	-18.3
Other Floor	0	0	0	0	0.0
Infiltration	0	0	0	0	0.0
Envelope Subtotal	-63	97	0	34	-
People	0	0	0	0	0.0
Lights	78	71	0	149	59.2
RA Sensible (Lights)	89	0	0	89	35.6
Miscellaneous Loads	0	0	0	0	0.0
Internal Subtotal	167	71	0	238	-
RA (All Other)	0	0	0	0	0.0
DOA Direct to Room	0	0	0	0	0.0
Ceiling	0	-3	0	-3	-1.1
Refrigeration	0	0	0	0	0.0
Service Water	0	0	0	0	0.0
HVAC Equipment Losses	0	0	0	0	0.0
Adj Air Transfer Heat	0	0	0	0	0.0
Sizing Factor Correction	0	0	0	0	0.0
Time Delay Correction	0	-18	0	-18	-7.1
Grand Total	104	147	0	251	100.0

Engineering Checks

Cooling tons	0.02	Input Ventilation cfm	8
Cooling cfm	85.41	Calculated Ventilation cfm	18
ft²/ton	6114.76	Number of People	0.00
cfm/ton	4,076.09	People per 1000 ft²	0
Conditioned ft²	128.1		

Conditions at Time of Heating Peak

Outside	DB / WB / HR	16.4 °F	/	12.6 °F	/	5.3 gr/lb
Room	DB / RH / HR	70.0 °F	/	4.9 %	/	5.2 gr/lb

	Instant Sensible (Btu/h)	Time Delay Sensible (Btu/h)	Latent (Btu/h)	Total (Btu/h)	Percent of Total (%)
Roof	0	0	0	0	0.0
Other Roof	0	0	0	0	0.0
Glass	-438	0	0	-438	99.6
Door	0	0	0	0	0.0
Wall	0	0	0	0	0.0
Below-Grade Wall	0	0	0	0	0.0
Other Wall	0	0	0	0	0.0
Partition	0	79	0	79	-18.0
Exterior Floor	0	0	0	0	0.0
Interior Floor	0	0	0	0	0.0
Slab	0	-1	0	-1	0.3
Other Floor	0	0	0	0	0.0
Infiltration	0	0	0	0	0.0
Envelope Subtotal	-438	78	0	-360	-
People	0	0	0	0	0.0
Lights	0	0	0	0	0.0
RA Sensible (Lights)	0	0	0	0	0.0
Miscellaneous Loads	0	0	0	0	0.0
Internal Subtotal	0	0	0	0	-
RA (All Other)	0	0	0	0	0.0
DOA Direct to Room	0	0	0	0	0.0
Ceiling	0	-80	0	-80	18.1
Refrigeration	0	0	0	0	0.0
Service Water	0	0	0	0	0.0
HVAC Equipment Losses	0	0	0	0	0.0
Adj Air Transfer Heat	0	0	0	0	0.0
Sizing Factor Correction	0	0	0	0	0.0
Time Delay Correction	0	0	0	0	0.0
Grand Total	-438	-2	0	-440	100.0

Engineering Checks

Heating Mbh	-0.44	Input Ventilation cfm	8
Heating cfm	25.62	Calculated Ventilation cfm	7
ft²/Mbh	-291.24	Number of People	0.00
cfm/Mbh	-58.26	People per 1000 ft²	0
Conditioned ft²	128.1		

ROOM_01_120A CORR_R02

Conditions at Time of Cooling Peak

Outside	DB / WB / HR	74.8 °F	/	62.5 °F	/	65.2 gr/lb
Room	DB / RH / HR	81.0 °F	/	39.9 %	/	62.8 gr/lb

	Instant Sensible (Btu/h)	Time Delay Sensible (Btu/h)	Latent (Btu/h)	Total (Btu/h)	Percent of Total (%)
Roof	0	0	0	0	0.0
Other Roof	0	0	0	0	0.0
Glass	323	336	0	659	65.4
Door	0	87	0	87	8.7
Wall	0	0	0	0	0.0
Below-Grade Wall	0	0	0	0	0.0
Other Wall	0	0	0	0	0.0
Partition	0	-238	0	-238	-23.7
Exterior Floor	0	0	0	0	0.0
Interior Floor	0	0	0	0	0.0
Slab	0	-219	0	-219	-21.8
Other Floor	0	0	0	0	0.0
Infiltration	0	0	0	0	0.0
Envelope Subtotal	323	-34	0	288	-
People	0	0	0	0	0.0
Lights	249	236	0	484	48.1
RA Sensible (Lights)	286	0	0	286	28.4
Miscellaneous Loads	0	0	0	0	0.0
Internal Subtotal	535	236	0	770	-
RA (All Other)	0	0	0	0	0.0
DOA Direct to Room	0	0	0	0	0.0
Ceiling	0	-28	0	-28	-2.8
Refrigeration	0	0	0	0	0.0
Service Water	0	0	0	0	0.0
HVAC Equipment Losses	0	0	0	0	0.0
Adj Air Transfer Heat	0	0	0	0	0.0
Sizing Factor Correction	0	0	0	0	0.0
Time Delay Correction	0	-24	0	-24	-2.4
Grand Total	857	149	0	1006	100.0

Engineering Checks

Cooling tons	0.08	Input Ventilation cfm	25
Cooling cfm	272.86	Calculated Ventilation cfm	42
ft²/ton	4879.97	Number of People	0.00
cfm/ton	3,252.70	People per 1000 ft²	0
Conditioned ft²	409.2		

Conditions at Time of Heating Peak

Outside	DB / WB / HR	16.4 °F	/	12.6 °F	/	5.3 gr/lb
Room	DB / RH / HR	70.0 °F	/	4.9 %	/	5.2 gr/lb

	Instant Sensible (Btu/h)	Time Delay Sensible (Btu/h)	Latent (Btu/h)	Total (Btu/h)	Percent of Total (%)
Roof	0	0	0	0	0.0
Other Roof	0	0	0	0	0.0
Glass	-348	0	0	-348	86.5
Door	0	-28	0	-28	7.0
Wall	0	0	0	0	0.0
Below-Grade Wall	0	0	0	0	0.0
Other Wall	0	0	0	0	0.0
Partition	0	130	0	130	-32.3
Exterior Floor	0	0	0	0	0.0
Interior Floor	0	0	0	0	0.0
Slab	0	-1	0	-1	0.2
Other Floor	0	0	0	0	0.0
Infiltration	0	0	0	0	0.0
Envelope Subtotal	-348	101	0	-247	-
People	0	0	0	0	0.0
Lights	0	0	0	0	0.0
RA Sensible (Lights)	0	0	0	0	0.0
Miscellaneous Loads	0	0	0	0	0.0
Internal Subtotal	0	0	0	0	-
RA (All Other)	0	0	0	0	0.0
DOA Direct to Room	0	0	0	0	0.0
Ceiling	0	-155	0	-155	38.6
Refrigeration	0	0	0	0	0.0
Service Water	0	0	0	0	0.0
HVAC Equipment Losses	0	0	0	0	0.0
Adj Air Transfer Heat	0	0	0	0	0.0
Sizing Factor Correction	0	0	0	0	0.0
Time Delay Correction	0	0	0	0	0.0
Grand Total	-348	-54	0	-402	100.0

Engineering Checks

Heating Mbh	-0.40	Input Ventilation cfm	25
Heating cfm	81.86	Calculated Ventilation cfm	23
ft²/Mbh	-1017.10	Number of People	0.00
cfm/Mbh	-203.42	People per 1000 ft²	0
Conditioned ft²	409.2		

ROOM_01_120A_OPEN OFFICE_R01

Conditions at Time of Cooling Peak

Outside	DB / WB / HR	83.3 °F	/	68.3 °F	/	80.3 gr/lb
Room	DB / RH / HR	75.0 °F	/	51.1 %	/	66.1 gr/lb

	Instant Sensible (Btu/h)	Time Delay Sensible (Btu/h)	Latent (Btu/h)	Total (Btu/h)	Percent of Total (%)
Roof	0	0	0	0	0.0
Other Roof	0	0	0	0	0.0
Glass	5936	7028	0	12964	53.4
Door	0	0	0	0	0.0
Wall	0	641	0	641	2.6
Below-Grade Wall	0	0	0	0	0.0
Other Wall	0	0	0	0	0.0
Partition	0	0	0	0	0.0
Exterior Floor	0	0	0	0	0.0
Interior Floor	0	0	0	0	0.0
Slab	0	-1820	0	-1820	-7.5
Other Floor	0	0	0	0	0.0
Infiltration	0	0	0	0	0.0
Envelope Subtotal	5936	5849	0	11785	-
People	924	807	2199	3930	16.2
Lights	654	636	0	1291	5.3
RA Sensible (Lights)	751	0	0	751	3.1
Miscellaneous Loads	4759	2263	0	7022	28.9
Internal Subtotal	7088	3707	2199	12994	-
RA (All Other)	0	0	0	0	0.0
DOA Direct to Room	0	0	0	0	0.0
Ceiling	0	474	0	474	2.0
Refrigeration	0	0	0	0	0.0
Service Water	0	0	0	0	0.0
HVAC Equipment Losses	0	0	0	0	0.0
Adj Air Transfer Heat	0	0	0	0	0.0
Sizing Factor Correction	0	0	0	0	0.0
Time Delay Correction	0	-986	0	-986	-4.1
Grand Total	13024	9044	2199	24267	100.0

Engineering Checks

Cooling tons	2.02	Input Ventilation cfm	83
Cooling cfm	980.39	Calculated Ventilation cfm	150
ft²/ton	358.31	Number of People	8.00
cfm/ton	484.71	People per 1000 ft²	11
Conditioned ft²	724.5		

Conditions at Time of Heating Peak

Outside	DB / WB / HR	16.4 °F	/	12.6 °F	/	5.3 gr/lb
Room	DB / RH / HR	70.0 °F	/	4.9 %	/	5.2 gr/lb

	Instant Sensible (Btu/h)	Time Delay Sensible (Btu/h)	Latent (Btu/h)	Total (Btu/h)	Percent of Total (%)
Roof	0	0	0	0	0.0
Other Roof	0	0	0	0	0.0
Glass	-6814	0	0	-6814	86.1
Door	0	0	0	0	0.0
Wall	0	-517	0	-517	6.5
Below-Grade Wall	0	0	0	0	0.0
Other Wall	0	0	0	0	0.0
Partition	0	0	0	0	0.0
Exterior Floor	0	0	0	0	0.0
Interior Floor	0	0	0	0	0.0
Slab	0	-5	0	-5	0.1
Other Floor	0	0	0	0	0.0
Infiltration	0	0	0	0	0.0
Envelope Subtotal	-6814	-522	0	-7336	-
People	0	0	0	0	0.0
Lights	0	0	0	0	0.0
RA Sensible (Lights)	0	0	0	0	0.0
Miscellaneous Loads	0	0	0	0	0.0
Internal Subtotal	0	0	0	0	-
RA (All Other)	0	0	0	0	0.0
DOA Direct to Room	0	0	0	0	0.0
Ceiling	0	-580	0	-580	7.3
Refrigeration	0	0	0	0	0.0
Service Water	0	0	0	0	0.0
HVAC Equipment Losses	0	0	0	0	0.0
Adj Air Transfer Heat	0	0	0	0	0.0
Sizing Factor Correction	0	0	0	0	0.0
Time Delay Correction	0	0	0	0	0.0
Grand Total	-6814	-1102	0	-7916	100.0

Engineering Checks

Heating Mbh	-7.92	Input Ventilation cfm	83
Heating cfm	294.12	Calculated Ventilation cfm	83
ft²/Mbh	-91.54	Number of People	8.00
cfm/Mbh	-37.15	People per 1000 ft²	11
Conditioned ft²	724.5		

ROOM_01_120B_CORR_R01

Conditions at Time of Cooling Peak

Outside	DB / WB / HR	74.4 °F	/	62.3 °F	/	65.2 gr/lb
Room	DB / RH / HR	81.0 °F	/	39.9 %	/	62.8 gr/lb

	Instant Sensible (Btu/h)	Time Delay Sensible (Btu/h)	Latent (Btu/h)	Total (Btu/h)	Percent of Total (%)
Roof	0	0	0	0	0.0
Other Roof	0	0	0	0	0.0
Glass	173	649	0	823	122.3
Door	0	0	0	0	0.0
Wall	0	0	0	0	0.0
Below-Grade Wall	0	0	0	0	0.0
Other Wall	0	0	0	0	0.0
Partition	0	-220	0	-220	-32.7
Exterior Floor	0	0	0	0	0.0
Interior Floor	0	0	0	0	0.0
Slab	0	-157	0	-157	-23.4
Other Floor	0	0	0	0	0.0
Infiltration	0	0	0	0	0.0
Envelope Subtotal	173	272	0	445	-
People	0	0	0	0	0.0
Lights	99	102	0	201	29.9
RA Sensible (Lights)	113	0	0	113	16.9
Miscellaneous Loads	0	0	0	0	0.0
Internal Subtotal	212	102	0	315	-
RA (All Other)	0	0	0	0	0.0
DOA Direct to Room	0	0	0	0	0.0
Ceiling	0	-59	0	-59	-8.8
Refrigeration	0	0	0	0	0.0
Service Water	0	0	0	0	0.0
HVAC Equipment Losses	0	0	0	0	0.0
Adj Air Transfer Heat	0	0	0	0	0.0
Sizing Factor Correction	0	0	0	0	0.0
Time Delay Correction	0	-28	0	-28	-4.1
Grand Total	386	287	0	673	100.0

Engineering Checks

Cooling tons	0.06	Input Ventilation cfm	10
Cooling cfm	108.38	Calculated Ventilation cfm	17
ft²/ton	2897.81	Number of People	0.00
cfm/ton	1,931.70	People per 1000 ft²	0
Conditioned ft²	162.5		

Conditions at Time of Heating Peak

Outside	DB / WB / HR	16.4 °F	/	12.6 °F	/	5.3 gr/lb
Room	DB / RH / HR	70.0 °F	/	4.9 %	/	5.2 gr/lb

	Instant Sensible (Btu/h)	Time Delay Sensible (Btu/h)	Latent (Btu/h)	Total (Btu/h)	Percent of Total (%)
Roof	0	0	0	0	0.0
Other Roof	0	0	0	0	0.0
Glass	-370	0	0	-370	97.8
Door	0	0	0	0	0.0
Wall	0	0	0	0	0.0
Below-Grade Wall	0	0	0	0	0.0
Other Wall	0	0	0	0	0.0
Partition	0	70	0	70	-18.4
Exterior Floor	0	0	0	0	0.0
Interior Floor	0	0	0	0	0.0
Slab	0	-1	0	-1	0.4
Other Floor	0	0	0	0	0.0
Infiltration	0	0	0	0	0.0
Envelope Subtotal	-370	68	0	-302	-
People	0	0	0	0	0.0
Lights	0	0	0	0	0.0
RA Sensible (Lights)	0	0	0	0	0.0
Miscellaneous Loads	0	0	0	0	0.0
Internal Subtotal	0	0	0	0	-
RA (All Other)	0	0	0	0	0.0
DOA Direct to Room	0	0	0	0	0.0
Ceiling	0	-77	0	-77	20.3
Refrigeration	0	0	0	0	0.0
Service Water	0	0	0	0	0.0
HVAC Equipment Losses	0	0	0	0	0.0
Adj Air Transfer Heat	0	0	0	0	0.0
Sizing Factor Correction	0	0	0	0	0.0
Time Delay Correction	0	0	0	0	0.0
Grand Total	-370	-8	0	-379	100.0

Engineering Checks

Heating Mbh	-0.38	Input Ventilation cfm	10
Heating cfm	32.51	Calculated Ventilation cfm	9
ft²/Mbh	-429.19	Number of People	0.00
cfm/Mbh	-85.85	People per 1000 ft²	0
Conditioned ft²	162.5		

ROOM_01_120B_OPEN OFFICE_R01

Conditions at Time of Cooling Peak

Outside	DB / WB / HR	74.8 °F	/	62.5 °F	/	65.2 gr/lb
Room	DB / RH / HR	75.0 °F	/	50.8 %	/	65.7 gr/lb

	Instant Sensible (Btu/h)	Time Delay Sensible (Btu/h)	Latent (Btu/h)	Total (Btu/h)	Percent of Total (%)
Roof	0	0	0	0	0.0
Other Roof	0	0	0	0	0.0
Glass	4064	5125	0	9189	46.1
Door	0	0	0	0	0.0
Wall	0	347	0	347	1.7
Below-Grade Wall	0	0	0	0	0.0
Other Wall	0	0	0	0	0.0
Partition	0	0	0	0	0.0
Exterior Floor	0	0	0	0	0.0
Interior Floor	0	0	0	0	0.0
Slab	0	-1716	0	-1716	-8.6
Other Floor	0	0	0	0	0.0
Infiltration	0	0	0	0	0.0
Envelope Subtotal	4064	3756	0	7820	-
People	840	837	1600	3276	16.4
Lights	729	826	0	1554	7.8
RA Sensible (Lights)	837	0	0	837	4.2
Miscellaneous Loads	4928	2852	0	7780	39.1
Internal Subtotal	7333	4515	1600	13448	-
RA (All Other)	0	0	0	0	0.0
DOA Direct to Room	0	0	0	0	0.0
Ceiling	0	98	0	98	0.5
Refrigeration	0	0	0	0	0.0
Service Water	0	0	0	0	0.0
HVAC Equipment Losses	0	0	0	0	0.0
Adj Air Transfer Heat	0	0	0	0	0.0
Sizing Factor Correction	0	0	0	0	0.0
Time Delay Correction	0	-1449	0	-1449	-7.3
Grand Total	11397	6919	1600	19917	100.0

Engineering Checks

Cooling tons	1.66	Input Ventilation cfm	88
Cooling cfm	982.49	Calculated Ventilation cfm	150
ft²/ton	486.32	Number of People	8.00
cfm/ton	591.85	People per 1000 ft²	10
Conditioned ft²	807.1		

Conditions at Time of Heating Peak

Outside	DB / WB / HR	16.4 °F	/	12.6 °F	/	5.3 gr/lb
Room	DB / RH / HR	70.0 °F	/	4.9 %	/	5.2 gr/lb

	Instant Sensible (Btu/h)	Time Delay Sensible (Btu/h)	Latent (Btu/h)	Total (Btu/h)	Percent of Total (%)
Roof	0	0	0	0	0.0
Other Roof	0	0	0	0	0.0
Glass	-3304	0	0	-3304	79.8
Door	0	0	0	0	0.0
Wall	0	-311	0	-311	7.5
Below-Grade Wall	0	0	0	0	0.0
Other Wall	0	0	0	0	0.0
Partition	0	1	0	1	0.0
Exterior Floor	0	0	0	0	0.0
Interior Floor	0	0	0	0	0.0
Slab	0	-7	0	-7	0.2
Other Floor	0	0	0	0	0.0
Infiltration	0	0	0	0	0.0
Envelope Subtotal	-3304	-317	0	-3621	-
People	0	0	0	0	0.0
Lights	0	0	0	0	0.0
RA Sensible (Lights)	0	0	0	0	0.0
Miscellaneous Loads	0	0	0	0	0.0
Internal Subtotal	0	0	0	0	-
RA (All Other)	0	0	0	0	0.0
DOA Direct to Room	0	0	0	0	0.0
Ceiling	0	-517	0	-517	12.5
Refrigeration	0	0	0	0	0.0
Service Water	0	0	0	0	0.0
HVAC Equipment Losses	0	0	0	0	0.0
Adj Air Transfer Heat	0	0	0	0	0.0
Sizing Factor Correction	0	0	0	0	0.0
Time Delay Correction	0	0	0	0	0.0
Grand Total	-3304	-834	0	-4137	100.0

Engineering Checks

Heating Mbh	-4.14	Input Ventilation cfm	88
Heating cfm	294.75	Calculated Ventilation cfm	83
ft²/Mbh	-195.09	Number of People	8.00
cfm/Mbh	-71.24	People per 1000 ft²	10
Conditioned ft²	807.1		

ROOM_01_120C_OPEN OFFICE_R01

Conditions at Time of Cooling Peak

Outside	DB / WB / HR	74.0 °F	/	62.2 °F	/	65.2 gr/lb
Room	DB / RH / HR	75.0 °F	/	51.7 %	/	66.9 gr/lb

	Instant Sensible (Btu/h)	Time Delay Sensible (Btu/h)	Latent (Btu/h)	Total (Btu/h)	Percent of Total (%)
Roof	0	0	0	0	0.0
Other Roof	0	0	0	0	0.0
Glass	3462	4903	0	8365	41.9
Door	0	0	0	0	0.0
Wall	0	297	0	297	1.5
Below-Grade Wall	0	0	0	0	0.0
Other Wall	0	0	0	0	0.0
Partition	0	-125	0	-125	-0.6
Exterior Floor	0	0	0	0	0.0
Interior Floor	0	0	0	0	0.0
Slab	0	-1552	0	-1552	-7.8
Other Floor	0	0	0	0	0.0
Infiltration	0	0	0	0	0.0
Envelope Subtotal	3462	3523	0	6985	-
People	924	929	2199	4053	20.3
Lights	675	825	0	1500	7.5
RA Sensible (Lights)	775	0	0	775	3.9
Miscellaneous Loads	4806	2844	0	7650	38.3
Internal Subtotal	7180	4598	2199	13977	-
RA (All Other)	0	0	0	0	0.0
DOA Direct to Room	0	0	0	0	0.0
Ceiling	0	13	0	13	0.1
Refrigeration	0	0	0	0	0.0
Service Water	0	0	0	0	0.0
HVAC Equipment Losses	0	0	0	0	0.0
Adj Air Transfer Heat	0	0	0	0	0.0
Sizing Factor Correction	0	0	0	0	0.0
Time Delay Correction	0	-1023	0	-1023	-5.1
Grand Total	10642	7112	2199	19953	100.0

Engineering Checks

Cooling tons	1.66	Input Ventilation cfm	85
Cooling cfm	942.81	Calculated Ventilation cfm	144
ft²/ton	449.64	Number of People	8.00
cfm/ton	566.91	People per 1000 ft²	11
Conditioned ft²	747.6		

Conditions at Time of Heating Peak

Outside	DB / WB / HR	16.4 °F	/	12.6 °F	/	5.3 gr/lb
Room	DB / RH / HR	70.0 °F	/	4.9 %	/	5.2 gr/lb

	Instant Sensible (Btu/h)	Time Delay Sensible (Btu/h)	Latent (Btu/h)	Total (Btu/h)	Percent of Total (%)
Roof	0	0	0	0	0.0
Other Roof	0	0	0	0	0.0
Glass	-3060	0	0	-3060	93.0
Door	0	0	0	0	0.0
Wall	0	-257	0	-257	7.8
Below-Grade Wall	0	0	0	0	0.0
Other Wall	0	0	0	0	0.0
Partition	0	420	0	420	-12.8
Exterior Floor	0	0	0	0	0.0
Interior Floor	0	0	0	0	0.0
Slab	0	-6	0	-6	0.2
Other Floor	0	0	0	0	0.0
Infiltration	0	0	0	0	0.0
Envelope Subtotal	-3060	157	0	-2903	-
People	0	0	0	0	0.0
Lights	0	0	0	0	0.0
RA Sensible (Lights)	0	0	0	0	0.0
Miscellaneous Loads	0	0	0	0	0.0
Internal Subtotal	0	0	0	0	-
RA (All Other)	0	0	0	0	0.0
DOA Direct to Room	0	0	0	0	0.0
Ceiling	0	-388	0	-388	11.8
Refrigeration	0	0	0	0	0.0
Service Water	0	0	0	0	0.0
HVAC Equipment Losses	0	0	0	0	0.0
Adj Air Transfer Heat	0	0	0	0	0.0
Sizing Factor Correction	0	0	0	0	0.0
Time Delay Correction	0	0	0	0	0.0
Grand Total	-3060	-231	0	-3291	100.0

Engineering Checks

Heating Mbh	-3.29	Input Ventilation cfm	85
Heating cfm	282.84	Calculated Ventilation cfm	80
ft²/Mbh	-227.20	Number of People	8.00
cfm/Mbh	-85.95	People per 1000 ft²	11
Conditioned ft²	747.6		

ROOM_01_121A_OPEN OFFICE_R01

Conditions at Time of Cooling Peak

Outside	DB / WB / HR	74.0 °F	/	62.2 °F	/	65.2 gr/lb
Room	DB / RH / HR	75.0 °F	/	51.7 %	/	66.9 gr/lb

	Instant Sensible (Btu/h)	Time Delay Sensible (Btu/h)	Latent (Btu/h)	Total (Btu/h)	Percent of Total (%)
Roof	0	0	0	0	0.0
Other Roof	0	0	0	0	0.0
Glass	3316	4956	0	8272	41.3
Door	0	-22	0	-22	-0.1
Wall	0	283	0	283	1.4
Below-Grade Wall	0	0	0	0	0.0
Other Wall	0	0	0	0	0.0
Partition	0	-87	0	-87	-0.4
Exterior Floor	0	0	0	0	0.0
Interior Floor	0	0	0	0	0.0
Slab	0	-1467	0	-1467	-7.3
Other Floor	0	0	0	0	0.0
Infiltration	0	0	0	0	0.0
Envelope Subtotal	3316	3663	0	6979	-
People	924	913	2199	4037	20.1
Lights	693	831	0	1524	7.6
RA Sensible (Lights)	795	0	0	795	4.0
Miscellaneous Loads	4846	2809	0	7656	38.2
Internal Subtotal	7258	4554	2199	14012	-
RA (All Other)	0	0	0	0	0.0
DOA Direct to Room	0	0	0	0	0.0
Ceiling	0	65	0	65	0.3
Refrigeration	0	0	0	0	0.0
Service Water	0	0	0	0	0.0
HVAC Equipment Losses	0	0	0	0	0.0
Adj Air Transfer Heat	0	0	0	0	0.0
Sizing Factor Correction	0	0	0	0	0.0
Time Delay Correction	0	-1021	0	-1021	-5.1
Grand Total	10573	7262	2199	20035	100.0

Engineering Checks

Cooling tons	1.67	Input Ventilation cfm	86
Cooling cfm	955.86	Calculated Ventilation cfm	146
ft²/ton	459.54	Number of People	8.00
cfm/ton	572.41	People per 1000 ft²	10
Conditioned ft²	767.1		

Conditions at Time of Heating Peak

Outside	DB / WB / HR	16.4 °F	/	12.6 °F	/	5.3 gr/lb
Room	DB / RH / HR	70.0 °F	/	4.9 %	/	5.2 gr/lb

	Instant Sensible (Btu/h)	Time Delay Sensible (Btu/h)	Latent (Btu/h)	Total (Btu/h)	Percent of Total (%)
Roof	0	0	0	0	0.0
Other Roof	0	0	0	0	0.0
Glass	-2974	0	0	-2974	82.5
Door	0	12	0	12	-0.3
Wall	0	-274	0	-274	7.6
Below-Grade Wall	0	0	0	0	0.0
Other Wall	0	0	0	0	0.0
Partition	0	51	0	51	-1.4
Exterior Floor	0	0	0	0	0.0
Interior Floor	0	0	0	0	0.0
Slab	0	-7	0	-7	0.2
Other Floor	0	0	0	0	0.0
Infiltration	0	0	0	0	0.0
Envelope Subtotal	-2974	-218	0	-3192	-
People	0	0	0	0	0.0
Lights	0	0	0	0	0.0
RA Sensible (Lights)	0	0	0	0	0.0
Miscellaneous Loads	0	0	0	0	0.0
Internal Subtotal	0	0	0	0	-
RA (All Other)	0	0	0	0	0.0
DOA Direct to Room	0	0	0	0	0.0
Ceiling	0	-414	0	-414	11.5
Refrigeration	0	0	0	0	0.0
Service Water	0	0	0	0	0.0
HVAC Equipment Losses	0	0	0	0	0.0
Adj Air Transfer Heat	0	0	0	0	0.0
Sizing Factor Correction	0	0	0	0	0.0
Time Delay Correction	0	0	0	0	0.0
Grand Total	-2974	-632	0	-3606	100.0

Engineering Checks

Heating Mbh	-3.61	Input Ventilation cfm	86
Heating cfm	286.76	Calculated Ventilation cfm	81
ft²/Mbh	-212.76	Number of People	8.00
cfm/Mbh	-79.52	People per 1000 ft²	10
Conditioned ft²	767.1		

ROOM_01_121B_OPEN OFFICE_R01

Conditions at Time of Cooling Peak

Outside	DB / WB / HR	74.0 °F	/	62.2 °F	/	65.2 gr/lb
Room	DB / RH / HR	75.0 °F	/	50.8 %	/	65.7 gr/lb

	Instant Sensible (Btu/h)	Time Delay Sensible (Btu/h)	Latent (Btu/h)	Total (Btu/h)	Percent of Total (%)
Roof	0	0	0	0	0.0
Other Roof	0	0	0	0	0.0
Glass	4312	5022	0	9334	47.0
Door	0	0	0	0	0.0
Wall	0	331	0	331	1.7
Below-Grade Wall	0	0	0	0	0.0
Other Wall	0	0	0	0	0.0
Partition	0	0	0	0	0.0
Exterior Floor	0	0	0	0	0.0
Interior Floor	0	0	0	0	0.0
Slab	0	-1652	0	-1652	-8.3
Other Floor	0	0	0	0	0.0
Infiltration	0	0	0	0	0.0
Envelope Subtotal	4312	3700	0	8012	-
People	840	822	1600	3261	16.4
Lights	706	791	0	1498	7.5
RA Sensible (Lights)	811	0	0	811	4.1
Miscellaneous Loads	4877	2806	0	7683	38.7
Internal Subtotal	7233	4420	1600	13253	-
RA (All Other)	0	0	0	0	0.0
DOA Direct to Room	0	0	0	0	0.0
Ceiling	0	33	0	33	0.2
Refrigeration	0	0	0	0	0.0
Service Water	0	0	0	0	0.0
HVAC Equipment Losses	0	0	0	0	0.0
Adj Air Transfer Heat	0	0	0	0	0.0
Sizing Factor Correction	0	0	0	0	0.0
Time Delay Correction	0	-1455	0	-1455	-7.3
Grand Total	11546	6697	1600	19843	100.0

Engineering Checks

Cooling tons	1.65	Input Ventilation cfm	87
Cooling cfm	965.83	Calculated Ventilation cfm	147
ft²/ton	473.03	Number of People	8.00
cfm/ton	583.98	People per 1000 ft²	10
Conditioned ft²	782.1		

Conditions at Time of Heating Peak

Outside	DB / WB / HR	16.4 °F	/	12.6 °F	/	5.3 gr/lb
Room	DB / RH / HR	70.0 °F	/	4.9 %	/	5.2 gr/lb

	Instant Sensible (Btu/h)	Time Delay Sensible (Btu/h)	Latent (Btu/h)	Total (Btu/h)	Percent of Total (%)
Roof	0	0	0	0	0.0
Other Roof	0	0	0	0	0.0
Glass	-3319	0	0	-3319	81.1
Door	0	0	0	0	0.0
Wall	0	-287	0	-287	7.0
Below-Grade Wall	0	0	0	0	0.0
Other Wall	0	0	0	0	0.0
Partition	0	1	0	1	0.0
Exterior Floor	0	0	0	0	0.0
Interior Floor	0	0	0	0	0.0
Slab	0	-7	0	-7	0.2
Other Floor	0	0	0	0	0.0
Infiltration	0	0	0	0	0.0
Envelope Subtotal	-3319	-294	0	-3613	-
People	0	0	0	0	0.0
Lights	0	0	0	0	0.0
RA Sensible (Lights)	0	0	0	0	0.0
Miscellaneous Loads	0	0	0	0	0.0
Internal Subtotal	0	0	0	0	-
RA (All Other)	0	0	0	0	0.0
DOA Direct to Room	0	0	0	0	0.0
Ceiling	0	-477	0	-477	11.7
Refrigeration	0	0	0	0	0.0
Service Water	0	0	0	0	0.0
HVAC Equipment Losses	0	0	0	0	0.0
Adj Air Transfer Heat	0	0	0	0	0.0
Sizing Factor Correction	0	0	0	0	0.0
Time Delay Correction	0	0	0	0	0.0
Grand Total	-3319	-772	0	-4090	100.0

Engineering Checks

Heating Mbh	-4.09	Input Ventilation cfm	87
Heating cfm	289.75	Calculated Ventilation cfm	82
ft²/Mbh	-191.23	Number of People	8.00
cfm/Mbh	-70.84	People per 1000 ft²	10
Conditioned ft²	782.1		

ROOM_01_121C_OPEN OFFICE_R01

Conditions at Time of Cooling Peak

Outside	DB / WB / HR	83.3 °F	/	71.3 °F	/	96.6 gr/lb
Room	DB / RH / HR	75.0 °F	/	51.3 %	/	66.3 gr/lb

	Instant Sensible (Btu/h)	Time Delay Sensible (Btu/h)	Latent (Btu/h)	Total (Btu/h)	Percent of Total (%)
Roof	0	0	0	0	0.0
Other Roof	0	0	0	0	0.0
Glass	5630	-613	0	5017	22.1
Door	0	0	0	0	0.0
Wall	0	1198	0	1198	5.3
Below-Grade Wall	0	0	0	0	0.0
Other Wall	0	0	0	0	0.0
Partition	0	0	0	0	0.0
Exterior Floor	0	0	0	0	0.0
Interior Floor	0	0	0	0	0.0
Slab	0	4160	0	4160	18.3
Other Floor	0	0	0	0	0.0
Infiltration	0	0	0	0	0.0
Envelope Subtotal	5630	4744	0	10375	-
People	924	231	2199	3354	14.8
Lights	666	132	0	799	3.5
RA Sensible (Lights)	765	0	0	765	3.4
Miscellaneous Loads	4787	680	0	5467	24.1
Internal Subtotal	7142	1044	2199	10385	-
RA (All Other)	0	0	0	0	0.0
DOA Direct to Room	0	0	0	0	0.0
Ceiling	0	2854	0	2854	12.6
Refrigeration	0	0	0	0	0.0
Service Water	0	0	0	0	0.0
HVAC Equipment Losses	0	0	0	0	0.0
Adj Air Transfer Heat	0	0	0	0	0.0
Sizing Factor Correction	0	0	0	0	0.0
Time Delay Correction	0	-909	0	-909	-4.0
Grand Total	12773	7733	2199	22705	100.0

Engineering Checks

Cooling tons	1.89	Input Ventilation cfm	84
Cooling cfm	968.11	Calculated Ventilation cfm	148
ft²/ton	390.18	Number of People	8.00
cfm/ton	511.56	People per 1000 ft²	11
Conditioned ft²	738.2		

Conditions at Time of Heating Peak

Outside	DB / WB / HR	16.4 °F	/	12.6 °F	/	5.3 gr/lb
Room	DB / RH / HR	70.0 °F	/	4.9 %	/	5.2 gr/lb

	Instant Sensible (Btu/h)	Time Delay Sensible (Btu/h)	Latent (Btu/h)	Total (Btu/h)	Percent of Total (%)
Roof	0	0	0	0	0.0
Other Roof	0	0	0	0	0.0
Glass	-6654	0	0	-6654	85.1
Door	0	0	0	0	0.0
Wall	0	-532	0	-532	6.8
Below-Grade Wall	0	0	0	0	0.0
Other Wall	0	0	0	0	0.0
Partition	0	0	0	0	0.0
Exterior Floor	0	0	0	0	0.0
Interior Floor	0	0	0	0	0.0
Slab	0	-6	0	-6	0.1
Other Floor	0	0	0	0	0.0
Infiltration	0	0	0	0	0.0
Envelope Subtotal	-6654	-538	0	-7192	-
People	0	0	0	0	0.0
Lights	0	0	0	0	0.0
RA Sensible (Lights)	0	0	0	0	0.0
Miscellaneous Loads	0	0	0	0	0.0
Internal Subtotal	0	0	0	0	-
RA (All Other)	0	0	0	0	0.0
DOA Direct to Room	0	0	0	0	0.0
Ceiling	0	-625	0	-625	8.0
Refrigeration	0	0	0	0	0.0
Service Water	0	0	0	0	0.0
HVAC Equipment Losses	0	0	0	0	0.0
Adj Air Transfer Heat	0	0	0	0	0.0
Sizing Factor Correction	0	0	0	0	0.0
Time Delay Correction	0	0	0	0	0.0
Grand Total	-6654	-1162	0	-7817	100.0

Engineering Checks

Heating Mbh	-7.82	Input Ventilation cfm	84
Heating cfm	290.43	Calculated Ventilation cfm	82
ft²/Mbh	-94.45	Number of People	8.00
cfm/Mbh	-37.16	People per 1000 ft²	11
Conditioned ft²	738.2		

ROOM_01_122_CONF RM_R01

Conditions at Time of Cooling Peak

Outside	DB / WB / HR	74.8 °F	/	62.5 °F	/	65.2 gr/lb
Room	DB / RH / HR	75.0 °F	/	59.9 %	/	77.6 gr/lb

	Instant Sensible (Btu/h)	Time Delay Sensible (Btu/h)	Latent (Btu/h)	Total (Btu/h)	Percent of Total (%)
Roof	0	0	0	0	0.0
Other Roof	0	0	0	0	0.0
Glass	0	0	0	0	0.0
Door	0	21	0	21	0.6
Wall	0	0	0	0	0.0
Below-Grade Wall	0	0	0	0	0.0
Other Wall	0	0	0	0	0.0
Partition	0	160	0	160	4.9
Exterior Floor	0	0	0	0	0.0
Interior Floor	0	0	0	0	0.0
Slab	0	-67	0	-67	-2.0
Other Floor	0	0	0	0	0.0
Infiltration	0	0	0	0	0.0
Envelope Subtotal	0	113	0	113	-
People	525	698	1000	2223	67.5
Lights	153	275	0	428	13.0
RA Sensible (Lights)	176	0	0	176	5.3
Miscellaneous Loads	174	134	0	308	9.4
Internal Subtotal	1028	1107	1000	3135	-
RA (All Other)	0	0	0	0	0.0
DOA Direct to Room	0	0	0	0	0.0
Ceiling	0	53	0	53	1.6
Refrigeration	0	0	0	0	0.0
Service Water	0	0	0	0	0.0
HVAC Equipment Losses	0	0	0	0	0.0
Adj Air Transfer Heat	0	0	0	0	0.0
Sizing Factor Correction	0	0	0	0	0.0
Time Delay Correction	0	-8	0	-8	-0.2
Grand Total	1028	1265	1000	3293	100.0

Engineering Checks

Cooling tons	0.27	Input Ventilation cfm	33
Cooling cfm	367.87	Calculated Ventilation cfm	56
ft²/ton	492.28	Number of People	5.00
cfm/ton	1,340.17	People per 1000 ft²	37
Conditioned ft²	135.1		

Conditions at Time of Heating Peak

Outside	DB / WB / HR	16.4 °F	/	12.6 °F	/	5.3 gr/lb
Room	DB / RH / HR	70.0 °F	/	4.9 %	/	5.2 gr/lb

	Instant Sensible (Btu/h)	Time Delay Sensible (Btu/h)	Latent (Btu/h)	Total (Btu/h)	Percent of Total (%)
Roof	0	0	0	0	0.0
Other Roof	0	0	0	0	0.0
Glass	0	0	0	0	0.0
Door	0	-12	0	-12	7.1
Wall	0	0	0	0	0.0
Below-Grade Wall	0	0	0	0	0.0
Other Wall	0	0	0	0	0.0
Partition	0	-68	0	-68	40.3
Exterior Floor	0	0	0	0	0.0
Interior Floor	0	0	0	0	0.0
Slab	0	-1	0	-1	0.9
Other Floor	0	0	0	0	0.0
Infiltration	0	0	0	0	0.0
Envelope Subtotal	0	-81	0	-81	-
People	0	0	0	0	0.0
Lights	0	0	0	0	0.0
RA Sensible (Lights)	0	0	0	0	0.0
Miscellaneous Loads	0	0	0	0	0.0
Internal Subtotal	0	0	0	0	-
RA (All Other)	0	0	0	0	0.0
DOA Direct to Room	0	0	0	0	0.0
Ceiling	0	-87	0	-87	51.8
Refrigeration	0	0	0	0	0.0
Service Water	0	0	0	0	0.0
HVAC Equipment Losses	0	0	0	0	0.0
Adj Air Transfer Heat	0	0	0	0	0.0
Sizing Factor Correction	0	0	0	0	0.0
Time Delay Correction	0	0	0	0	0.0
Grand Total	0	-168	0	-168	100.0

Engineering Checks

Heating Mbh	-0.17	Input Ventilation cfm	33
Heating cfm	110.36	Calculated Ventilation cfm	31
ft²/Mbh	-803.54	Number of People	5.00
cfm/Mbh	-656.39	People per 1000 ft²	37
Conditioned ft²	135.1		

ROOM_01_124_BREAK OUT_R01

Conditions at Time of Cooling Peak

Outside	DB / WB / HR	80.4 °F	/	70.9 °F	/	99.4 gr/lb
Room	DB / RH / HR	75.0 °F	/	49.4 %	/	63.8 gr/lb

	Instant Sensible (Btu/h)	Time Delay Sensible (Btu/h)	Latent (Btu/h)	Total (Btu/h)	Percent of Total (%)
Roof	0	0	0	0	0.0
Other Roof	0	0	0	0	0.0
Glass	641	1088	0	1729	67.7
Door	0	-17	0	-17	-0.6
Wall	0	172	0	172	6.7
Below-Grade Wall	0	0	0	0	0.0
Other Wall	0	0	0	0	0.0
Partition	0	280	0	280	11.0
Exterior Floor	0	0	0	0	0.0
Interior Floor	0	0	0	0	0.0
Slab	0	-268	0	-268	-10.5
Other Floor	0	0	0	0	0.0
Infiltration	0	0	0	0	0.0
Envelope Subtotal	641	1255	0	1896	-
People	40	41	76	157	6.1
Lights	86	129	0	215	8.4
RA Sensible (Lights)	99	0	0	99	3.9
Miscellaneous Loads	98	64	0	162	6.3
Internal Subtotal	323	234	76	633	-
RA (All Other)	0	0	0	0	0.0
DOA Direct to Room	0	0	0	0	0.0
Ceiling	0	31	0	31	1.2
Refrigeration	0	0	0	0	0.0
Service Water	0	0	0	0	0.0
HVAC Equipment Losses	0	0	0	0	0.0
Adj Air Transfer Heat	0	0	0	0	0.0
Sizing Factor Correction	0	0	0	0	0.0
Time Delay Correction	0	-7	0	-7	-0.3
Grand Total	964	1512	76	2552	100.0

Engineering Checks

Cooling tons	0.21	Input Ventilation cfm	6
Cooling cfm	115.39	Calculated Ventilation cfm	18
ft²/ton	357.37	Number of People	0.38
cfm/ton	542.50	People per 1000 ft²	5
Conditioned ft²	76.0		

Conditions at Time of Heating Peak

Outside	DB / WB / HR	16.4 °F	/	12.6 °F	/	5.3 gr/lb
Room	DB / RH / HR	70.0 °F	/	4.9 %	/	5.2 gr/lb

	Instant Sensible (Btu/h)	Time Delay Sensible (Btu/h)	Latent (Btu/h)	Total (Btu/h)	Percent of Total (%)
Roof	0	0	0	0	0.0
Other Roof	0	0	0	0	0.0
Glass	-699	0	0	-699	75.1
Door	0	11	0	11	-1.1
Wall	0	-147	0	-147	15.8
Below-Grade Wall	0	0	0	0	0.0
Other Wall	0	0	0	0	0.0
Partition	0	-22	0	-22	2.4
Exterior Floor	0	0	0	0	0.0
Interior Floor	0	0	0	0	0.0
Slab	0	-1	0	-1	0.1
Other Floor	0	0	0	0	0.0
Infiltration	0	0	0	0	0.0
Envelope Subtotal	-699	-160	0	-859	-
People	0	0	0	0	0.0
Lights	0	0	0	0	0.0
RA Sensible (Lights)	0	0	0	0	0.0
Miscellaneous Loads	0	0	0	0	0.0
Internal Subtotal	0	0	0	0	-
RA (All Other)	0	0	0	0	0.0
DOA Direct to Room	0	0	0	0	0.0
Ceiling	0	-72	0	-72	7.8
Refrigeration	0	0	0	0	0.0
Service Water	0	0	0	0	0.0
HVAC Equipment Losses	0	0	0	0	0.0
Adj Air Transfer Heat	0	0	0	0	0.0
Sizing Factor Correction	0	0	0	0	0.0
Time Delay Correction	0	0	0	0	0.0
Grand Total	-699	-232	0	-932	100.0

Engineering Checks

Heating Mbh	-0.93	Input Ventilation cfm	6
Heating cfm	34.62	Calculated Ventilation cfm	10
ft²/Mbh	-81.57	Number of People	0.38
cfm/Mbh	-37.16	People per 1000 ft²	5
Conditioned ft²	76.0		

ROOM_01_130_VESTIBULE

Conditions at Time of Cooling Peak

Outside	DB / WB / HR	63.6 °F	/	56.7 °F	/	58.1 gr/lb
Room	DB / RH / HR	81.0 °F	/	39.9 %	/	62.8 gr/lb

	Instant Sensible (Btu/h)	Time Delay Sensible (Btu/h)	Latent (Btu/h)	Total (Btu/h)	Percent of Total (%)
Roof	0	0	0	0	0.0
Other Roof	0	0	0	0	0.0
Glass	2432	4234	0	6666	134.1
Door	0	-99	0	-99	-2.0
Wall	0	44	0	44	0.9
Below-Grade Wall	0	0	0	0	0.0
Other Wall	0	0	0	0	0.0
Partition	0	-639	0	-639	-12.9
Exterior Floor	0	0	0	0	0.0
Interior Floor	0	0	0	0	0.0
Slab	0	-1018	0	-1018	-20.5
Other Floor	0	0	0	0	0.0
Infiltration	0	0	0	0	0.0
Envelope Subtotal	2432	2522	0	4955	-
People	0	0	0	0	0.0
Lights	113	164	0	277	5.6
RA Sensible (Lights)	130	0	0	130	2.6
Miscellaneous Loads	0	0	0	0	0.0
Internal Subtotal	243	164	0	407	-
RA (All Other)	0	0	0	0	0.0
DOA Direct to Room	0	0	0	0	0.0
Ceiling	0	-384	0	-384	-7.7
Refrigeration	0	0	0	0	0.0
Service Water	0	0	0	0	0.0
HVAC Equipment Losses	0	0	0	0	0.0
Adj Air Transfer Heat	0	0	0	0	0.0
Sizing Factor Correction	0	0	0	0	0.0
Time Delay Correction	0	-6	0	-6	-0.1
Grand Total	2675	2296	0	4971	100.0

Engineering Checks

Cooling tons	0.41	Input Ventilation cfm	0
Cooling cfm	0.00	Calculated Ventilation cfm	0
ft²/ton	448.80	Number of People	0.00
cfm/ton	0.00	People per 1000 ft²	0
Conditioned ft²	185.9		

Conditions at Time of Heating Peak

Outside	DB / WB / HR	16.4 °F	/	12.6 °F	/	5.3 gr/lb
Room	DB / RH / HR	70.0 °F	/	4.9 %	/	5.2 gr/lb

	Instant Sensible (Btu/h)	Time Delay Sensible (Btu/h)	Latent (Btu/h)	Total (Btu/h)	Percent of Total (%)
Roof	0	0	0	0	0.0
Other Roof	0	0	0	0	0.0
Glass	-2805	0	0	-2805	123.2
Door	0	43	0	43	-1.9
Wall	0	-42	0	-42	1.8
Below-Grade Wall	0	0	0	0	0.0
Other Wall	0	0	0	0	0.0
Partition	0	609	0	609	-26.8
Exterior Floor	0	0	0	0	0.0
Interior Floor	0	0	0	0	0.0
Slab	0	-1	0	-1	0.1
Other Floor	0	0	0	0	0.0
Infiltration	0	0	0	0	0.0
Envelope Subtotal	-2805	609	0	-2196	-
People	0	0	0	0	0.0
Lights	0	0	0	0	0.0
RA Sensible (Lights)	0	0	0	0	0.0
Miscellaneous Loads	0	0	0	0	0.0
Internal Subtotal	0	0	0	0	-
RA (All Other)	0	0	0	0	0.0
DOA Direct to Room	0	0	0	0	0.0
Ceiling	0	-80	0	-80	3.5
Refrigeration	0	0	0	0	0.0
Service Water	0	0	0	0	0.0
HVAC Equipment Losses	0	0	0	0	0.0
Adj Air Transfer Heat	0	0	0	0	0.0
Sizing Factor Correction	0	0	0	0	0.0
Time Delay Correction	0	0	0	0	0.0
Grand Total	-2805	529	0	-2276	100.0

Engineering Checks

Heating Mbh	-2.28	Input Ventilation cfm	0
Heating cfm	84.55	Calculated Ventilation cfm	0
ft²/Mbh	-81.69	Number of People	0.00
cfm/Mbh	-37.15	People per 1000 ft²	0
Conditioned ft²	185.9		

ROOM_01_131_SPRINKLER RM_R01

Conditions at Time of Cooling Peak

Outside	DB / WB / HR	84.2 °F	/	68.6 °F	/	80.3 gr/lb
Room	DB / RH / HR	81.0 °F	/	39.9 %	/	62.8 gr/lb

	Instant Sensible (Btu/h)	Time Delay Sensible (Btu/h)	Latent (Btu/h)	Total (Btu/h)	Percent of Total (%)
Roof	0	0	0	0	0.0
Other Roof	0	0	0	0	0.0
Glass	1287	928	0	2215	88.4
Door	0	0	0	0	0.0
Wall	0	325	0	325	13.0
Below-Grade Wall	0	0	0	0	0.0
Other Wall	0	0	0	0	0.0
Partition	0	-65	0	-65	-2.6
Exterior Floor	0	0	0	0	0.0
Interior Floor	0	0	0	0	0.0
Slab	0	-453	0	-453	-18.1
Other Floor	0	0	0	0	0.0
Infiltration	0	0	0	0	0.0
Envelope Subtotal	1287	735	0	2022	-
People	0	0	0	0	0.0
Lights	64	92	0	156	6.2
RA Sensible (Lights)	74	0	0	74	3.0
Miscellaneous Loads	215	133	0	347	13.9
Internal Subtotal	353	225	0	578	-
RA (All Other)	0	0	0	0	0.0
DOA Direct to Room	0	0	0	0	0.0
Ceiling	0	-90	0	-90	-3.6
Refrigeration	0	0	0	0	0.0
Service Water	0	0	0	0	0.0
HVAC Equipment Losses	0	0	0	0	0.0
Adj Air Transfer Heat	0	0	0	0	0.0
Sizing Factor Correction	0	0	0	0	0.0
Time Delay Correction	0	-5	0	-5	-0.2
Grand Total	1641	865	0	2505	100.0

Engineering Checks

Cooling tons	0.21	Input Ventilation cfm	86
Cooling cfm	85.56	Calculated Ventilation cfm	0
ft²/ton	797.66	Number of People	0.00
cfm/ton	409.75	People per 1000 ft²	0
Conditioned ft²	166.5		

Conditions at Time of Heating Peak

Outside	DB / WB / HR	16.4 °F	/	12.6 °F	/	5.3 gr/lb
Room	DB / RH / HR	70.0 °F	/	4.9 %	/	5.2 gr/lb

	Instant Sensible (Btu/h)	Time Delay Sensible (Btu/h)	Latent (Btu/h)	Total (Btu/h)	Percent of Total (%)
Roof	0	0	0	0	0.0
Other Roof	0	0	0	0	0.0
Glass	-1361	0	0	-1361	71.1
Door	0	0	0	0	0.0
Wall	0	-455	0	-455	23.8
Below-Grade Wall	0	0	0	0	0.0
Other Wall	0	0	0	0	0.0
Partition	0	104	0	104	-5.4
Exterior Floor	0	0	0	0	0.0
Interior Floor	0	0	0	0	0.0
Slab	0	-2	0	-2	0.1
Other Floor	0	0	0	0	0.0
Infiltration	0	0	0	0	0.0
Envelope Subtotal	-1361	-353	0	-1713	-
People	0	0	0	0	0.0
Lights	0	0	0	0	0.0
RA Sensible (Lights)	0	0	0	0	0.0
Miscellaneous Loads	0	0	0	0	0.0
Internal Subtotal	0	0	0	0	-
RA (All Other)	0	0	0	0	0.0
DOA Direct to Room	0	0	0	0	0.0
Ceiling	0	-201	0	-201	10.5
Refrigeration	0	0	0	0	0.0
Service Water	0	0	0	0	0.0
HVAC Equipment Losses	0	0	0	0	0.0
Adj Air Transfer Heat	0	0	0	0	0.0
Sizing Factor Correction	0	0	0	0	0.0
Time Delay Correction	0	0	0	0	0.0
Grand Total	-1361	-554	0	-1915	100.0

Engineering Checks

Heating Mbh	-1.91	Input Ventilation cfm	86
Heating cfm	85.56	Calculated Ventilation cfm	0
ft²/Mbh	-86.98	Number of People	0.00
cfm/Mbh	-44.69	People per 1000 ft²	0
Conditioned ft²	166.5		

ROOM_01_132_ELEC/TEL

Conditions at Time of Cooling Peak

Outside	DB / WB / HR	81.3 °F	/	67.7 °F	/	80.2 gr/lb
Room	DB / RH / HR	81.0 °F	/	39.9 %	/	62.8 gr/lb

	Instant Sensible (Btu/h)	Time Delay Sensible (Btu/h)	Latent (Btu/h)	Total (Btu/h)	Percent of Total (%)
Roof	0	0	0	0	0.0
Other Roof	0	0	0	0	0.0
Glass	728	1143	0	1870	33.9
Door	0	0	0	0	0.0
Wall	0	251	0	251	4.5
Below-Grade Wall	0	0	0	0	0.0
Other Wall	0	0	0	0	0.0
Partition	0	-392	0	-392	-7.1
Exterior Floor	0	0	0	0	0.0
Interior Floor	0	0	0	0	0.0
Slab	0	-338	0	-338	-6.1
Other Floor	0	0	0	0	0.0
Infiltration	0	0	0	0	0.0
Envelope Subtotal	728	663	0	1391	-
People	0	0	0	0	0.0
Lights	83	123	0	205	3.7
RA Sensible (Lights)	95	0	0	95	1.7
Miscellaneous Loads	2502	1608	0	4110	74.5
Internal Subtotal	2679	1731	0	4410	-
RA (All Other)	0	0	0	0	0.0
DOA Direct to Room	0	0	0	0	0.0
Ceiling	0	-239	0	-239	-4.3
Refrigeration	0	0	0	0	0.0
Service Water	0	0	0	0	0.0
HVAC Equipment Losses	0	0	0	0	0.0
Adj Air Transfer Heat	0	0	0	0	0.0
Sizing Factor Correction	0	0	0	0	0.0
Time Delay Correction	0	-46	0	-46	-0.8
Grand Total	3407	2109	0	5515	100.0

Engineering Checks

Cooling tons	0.46	Input Ventilation cfm	191
Cooling cfm	190.75	Calculated Ventilation cfm	0
ft²/ton	464.22	Number of People	0.00
cfm/ton	414.95	People per 1000 ft²	0
Conditioned ft²	213.3		

Conditions at Time of Heating Peak

Outside	DB / WB / HR	32.0 °F	/	32.0 °F	/	0.0 gr/lb
Room	DB / RH / HR	32.0 °F	/	0.0 %	/	0.0 gr/lb

	Instant Sensible (Btu/h)	Time Delay Sensible (Btu/h)	Latent (Btu/h)	Total (Btu/h)	Percent of Total (%)
Roof	0	0	0	0	0.0
Other Roof	0	0	0	0	0.0
Glass	0	0	0	0	0.0
Door	0	0	0	0	0.0
Wall	0	0	0	0	0.0
Below-Grade Wall	0	0	0	0	0.0
Other Wall	0	0	0	0	0.0
Partition	0	0	0	0	0.0
Exterior Floor	0	0	0	0	0.0
Interior Floor	0	0	0	0	0.0
Slab	0	0	0	0	0.0
Other Floor	0	0	0	0	0.0
Infiltration	0	0	0	0	0.0
Envelope Subtotal	0	0	0	0	-
People	0	0	0	0	0.0
Lights	0	0	0	0	0.0
RA Sensible (Lights)	0	0	0	0	0.0
Miscellaneous Loads	0	0	0	0	0.0
Internal Subtotal	0	0	0	0	-
RA (All Other)	0	0	0	0	0.0
DOA Direct to Room	0	0	0	0	0.0
Ceiling	0	0	0	0	0.0
Refrigeration	0	0	0	0	0.0
Service Water	0	0	0	0	0.0
HVAC Equipment Losses	0	0	0	0	0.0
Adj Air Transfer Heat	0	0	0	0	0.0
Sizing Factor Correction	0	0	0	0	0.0
Time Delay Correction	0	0	0	0	0.0
Grand Total	0	0	0	0	100.0

Engineering Checks

Heating Mbh	0.00	Input Ventilation cfm	191
Heating cfm	190.75	Calculated Ventilation cfm	0
ft²/Mbh	0.00	Number of People	0.00
cfm/Mbh	0.00	People per 1000 ft²	0
Conditioned ft²	213.3		

ROOM_01_133_RECEIVING_R01

Conditions at Time of Cooling Peak

Outside	DB / WB / HR	74.8 °F	/	62.5 °F	/	65.2 gr/lb
Room	DB / RH / HR	75.0 °F	/	51.4 %	/	66.5 gr/lb

	Instant Sensible (Btu/h)	Time Delay Sensible (Btu/h)	Latent (Btu/h)	Total (Btu/h)	Percent of Total (%)
Roof	0	0	0	0	0.0
Other Roof	0	0	0	0	0.0
Glass	0	0	0	0	0.0
Door	0	17	0	17	0.8
Wall	0	0	0	0	0.0
Below-Grade Wall	0	0	0	0	0.0
Other Wall	0	0	0	0	0.0
Partition	0	787	0	787	36.0
Exterior Floor	0	0	0	0	0.0
Interior Floor	0	0	0	0	0.0
Slab	0	-72	0	-72	-3.3
Other Floor	0	0	0	0	0.0
Infiltration	0	0	0	0	0.0
Envelope Subtotal	0	733	0	733	-
People	104	129	198	431	19.7
Lights	0	76	0	76	3.5
RA Sensible (Lights)	305	0	0	305	13.9
Miscellaneous Loads	295	186	0	482	22.0
Internal Subtotal	704	392	198	1293	-
RA (All Other)	0	0	0	0	0.0
DOA Direct to Room	0	0	0	0	0.0
Ceiling	0	163	0	163	7.4
Refrigeration	0	0	0	0	0.0
Service Water	0	0	0	0	0.0
HVAC Equipment Losses	0	0	0	0	0.0
Adj Air Transfer Heat	0	0	0	0	0.0
Sizing Factor Correction	0	0	0	0	0.0
Time Delay Correction	0	-2	0	-2	-0.1
Grand Total	704	1286	198	2187	100.0

Engineering Checks

Cooling tons	0.18	Input Ventilation cfm	17
Cooling cfm	186.64	Calculated Ventilation cfm	28
ft²/ton	1084.37	Number of People	0.99
cfm/ton	1,023.81	People per 1000 ft²	5
Conditioned ft²	197.6		

Conditions at Time of Heating Peak

Outside	DB / WB / HR	16.4 °F	/	12.6 °F	/	5.3 gr/lb
Room	DB / RH / HR	70.0 °F	/	4.9 %	/	5.2 gr/lb

	Instant Sensible (Btu/h)	Time Delay Sensible (Btu/h)	Latent (Btu/h)	Total (Btu/h)	Percent of Total (%)
Roof	0	0	0	0	0.0
Other Roof	0	0	0	0	0.0
Glass	0	0	0	0	0.0
Door	0	-2	0	-2	1.6
Wall	0	0	0	0	0.0
Below-Grade Wall	0	0	0	0	0.0
Other Wall	0	0	0	0	0.0
Partition	0	36	0	36	-32.8
Exterior Floor	0	0	0	0	0.0
Interior Floor	0	0	0	0	0.0
Slab	0	-1	0	-1	1.3
Other Floor	0	0	0	0	0.0
Infiltration	0	0	0	0	0.0
Envelope Subtotal	0	33	0	33	-
People	0	0	0	0	0.0
Lights	0	0	0	0	0.0
RA Sensible (Lights)	0	0	0	0	0.0
Miscellaneous Loads	0	0	0	0	0.0
Internal Subtotal	0	0	0	0	-
RA (All Other)	0	0	0	0	0.0
DOA Direct to Room	0	0	0	0	0.0
Ceiling	0	-142	0	-142	129.9
Refrigeration	0	0	0	0	0.0
Service Water	0	0	0	0	0.0
HVAC Equipment Losses	0	0	0	0	0.0
Adj Air Transfer Heat	0	0	0	0	0.0
Sizing Factor Correction	0	0	0	0	0.0
Time Delay Correction	0	0	0	0	0.0
Grand Total	0	-109	0	-109	100.0

Engineering Checks

Heating Mbh	-0.11	Input Ventilation cfm	17
Heating cfm	55.99	Calculated Ventilation cfm	16
ft²/Mbh	-1809.49	Number of People	0.99
cfm/Mbh	-512.62	People per 1000 ft²	5
Conditioned ft²	197.6		

ROOM_01_134_STORAGE_R01

Conditions at Time of Cooling Peak

Outside	DB / WB / HR	74.8 °F	/	62.5 °F	/	65.2 gr/lb
Room	DB / RH / HR	81.0 °F	/	39.9 %	/	62.8 gr/lb

	Instant Sensible (Btu/h)	Time Delay Sensible (Btu/h)	Latent (Btu/h)	Total (Btu/h)	Percent of Total (%)
Roof	0	0	0	0	0.0
Other Roof	0	0	0	0	0.0
Glass	0	0	0	0	0.0
Door	0	-1	0	-1	-0.2
Wall	0	0	0	0	0.0
Below-Grade Wall	0	0	0	0	0.0
Other Wall	0	0	0	0	0.0
Partition	0	235	0	235	46.0
Exterior Floor	0	0	0	0	0.0
Interior Floor	0	0	0	0	0.0
Slab	0	-84	0	-84	-16.4
Other Floor	0	0	0	0	0.0
Infiltration	0	0	0	0	0.0
Envelope Subtotal	0	150	0	150	-
People	0	0	0	0	0.0
Lights	41	57	0	98	19.2
RA Sensible (Lights)	48	0	0	48	9.3
Miscellaneous Loads	138	81	0	219	42.8
Internal Subtotal	227	137	0	364	-
RA (All Other)	0	0	0	0	0.0
DOA Direct to Room	0	0	0	0	0.0
Ceiling	0	-3	0	-3	-0.6
Refrigeration	0	0	0	0	0.0
Service Water	0	0	0	0	0.0
HVAC Equipment Losses	0	0	0	0	0.0
Adj Air Transfer Heat	0	0	0	0	0.0
Sizing Factor Correction	0	0	0	0	0.0
Time Delay Correction	0	0	0	0	0.0
Grand Total	227	285	0	512	100.0

Engineering Checks

Cooling tons	0.04	Input Ventilation cfm	13
Cooling cfm	142.66	Calculated Ventilation cfm	22
ft²/ton	2510.10	Number of People	0.00
cfm/ton	3,345.78	People per 1000 ft²	0
Conditioned ft²	107.0		

Conditions at Time of Heating Peak

Outside	DB / WB / HR	16.4 °F	/	12.6 °F	/	5.3 gr/lb
Room	DB / RH / HR	70.0 °F	/	4.9 %	/	5.2 gr/lb

	Instant Sensible (Btu/h)	Time Delay Sensible (Btu/h)	Latent (Btu/h)	Total (Btu/h)	Percent of Total (%)
Roof	0	0	0	0	0.0
Other Roof	0	0	0	0	0.0
Glass	0	0	0	0	0.0
Door	0	3	0	3	-1.0
Wall	0	0	0	0	0.0
Below-Grade Wall	0	0	0	0	0.0
Other Wall	0	0	0	0	0.0
Partition	0	-169	0	-169	65.2
Exterior Floor	0	0	0	0	0.0
Interior Floor	0	0	0	0	0.0
Slab	0	-1	0	-1	0.5
Other Floor	0	0	0	0	0.0
Infiltration	0	0	0	0	0.0
Envelope Subtotal	0	-168	0	-168	-
People	0	0	0	0	0.0
Lights	0	0	0	0	0.0
RA Sensible (Lights)	0	0	0	0	0.0
Miscellaneous Loads	0	0	0	0	0.0
Internal Subtotal	0	0	0	0	-
RA (All Other)	0	0	0	0	0.0
DOA Direct to Room	0	0	0	0	0.0
Ceiling	0	-91	0	-91	35.2
Refrigeration	0	0	0	0	0.0
Service Water	0	0	0	0	0.0
HVAC Equipment Losses	0	0	0	0	0.0
Adj Air Transfer Heat	0	0	0	0	0.0
Sizing Factor Correction	0	0	0	0	0.0
Time Delay Correction	0	0	0	0	0.0
Grand Total	0	-259	0	-259	100.0

Engineering Checks

Heating Mbh	-0.26	Input Ventilation cfm	13
Heating cfm	42.80	Calculated Ventilation cfm	12
ft²/Mbh	-413.10	Number of People	0.00
cfm/Mbh	-165.22	People per 1000 ft²	0
Conditioned ft²	107.0		

ROOM_01_140_OFFICE_R02

Conditions at Time of Cooling Peak

Outside	DB / WB / HR	87.8 °F	/	73.1 °F	/	99.5 gr/lb
Room	DB / RH / HR	75.0 °F	/	50.5 %	/	65.3 gr/lb

	Instant Sensible (Btu/h)	Time Delay Sensible (Btu/h)	Latent (Btu/h)	Total (Btu/h)	Percent of Total (%)
Roof	0	0	0	0	0.0
Other Roof	0	0	0	0	0.0
Glass	753	1054	0	1807	36.8
Door	0	-10	0	-10	-0.2
Wall	0	462	0	462	9.4
Below-Grade Wall	0	0	0	0	0.0
Other Wall	0	0	0	0	0.0
Partition	0	428	0	428	8.7
Exterior Floor	0	0	0	0	0.0
Interior Floor	0	0	0	0	0.0
Slab	0	-387	0	-387	-7.9
Other Floor	0	0	0	0	0.0
Infiltration	0	0	0	0	0.0
Envelope Subtotal	753	1546	0	2299	-
People	181	248	346	775	15.8
Lights	149	257	0	406	8.3
RA Sensible (Lights)	171	0	0	171	3.5
Miscellaneous Loads	708	526	0	1234	25.1
Internal Subtotal	1210	1031	346	2586	-
RA (All Other)	0	0	0	0	0.0
DOA Direct to Room	0	0	0	0	0.0
Ceiling	0	50	0	50	1.0
Refrigeration	0	0	0	0	0.0
Service Water	0	0	0	0	0.0
HVAC Equipment Losses	0	0	0	0	0.0
Adj Air Transfer Heat	0	0	0	0	0.0
Sizing Factor Correction	0	0	0	0	0.0
Time Delay Correction	0	-24	0	-24	-0.5
Grand Total	1963	2603	346	4912	100.0

Engineering Checks

Cooling tons	0.41	Input Ventilation cfm	17
Cooling cfm	201.12	Calculated Ventilation cfm	43
ft²/ton	356.12	Number of People	1.73
cfm/ton	491.27	People per 1000 ft²	12
Conditioned ft²	145.7		

Conditions at Time of Heating Peak

Outside	DB / WB / HR	16.4 °F	/	12.6 °F	/	5.3 gr/lb
Room	DB / RH / HR	70.0 °F	/	4.9 %	/	5.2 gr/lb

	Instant Sensible (Btu/h)	Time Delay Sensible (Btu/h)	Latent (Btu/h)	Total (Btu/h)	Percent of Total (%)
Roof	0	0	0	0	0.0
Other Roof	0	0	0	0	0.0
Glass	-726	0	0	-726	54.5
Door	0	15	0	15	-1.1
Wall	0	-347	0	-347	26.0
Below-Grade Wall	0	0	0	0	0.0
Other Wall	0	0	0	0	0.0
Partition	0	-102	0	-102	7.6
Exterior Floor	0	0	0	0	0.0
Interior Floor	0	0	0	0	0.0
Slab	0	-2	0	-2	0.1
Other Floor	0	0	0	0	0.0
Infiltration	0	0	0	0	0.0
Envelope Subtotal	-726	-435	0	-1161	-
People	0	0	0	0	0.0
Lights	0	0	0	0	0.0
RA Sensible (Lights)	0	0	0	0	0.0
Miscellaneous Loads	0	0	0	0	0.0
Internal Subtotal	0	0	0	0	-
RA (All Other)	0	0	0	0	0.0
DOA Direct to Room	0	0	0	0	0.0
Ceiling	0	-173	0	-173	12.9
Refrigeration	0	0	0	0	0.0
Service Water	0	0	0	0	0.0
HVAC Equipment Losses	0	0	0	0	0.0
Adj Air Transfer Heat	0	0	0	0	0.0
Sizing Factor Correction	0	0	0	0	0.0
Time Delay Correction	0	0	0	0	0.0
Grand Total	-726	-608	0	-1334	100.0

Engineering Checks

Heating Mbh	-1.33	Input Ventilation cfm	17
Heating cfm	60.34	Calculated Ventilation cfm	17
ft²/Mbh	-109.28	Number of People	1.73
cfm/Mbh	-45.24	People per 1000 ft²	12
Conditioned ft²	145.7		

ROOM_01_140A_CORR_R02

Conditions at Time of Cooling Peak

Outside	DB / WB / HR	86.4 °F	/	72.7 °F	/	99.5 gr/lb
Room	DB / RH / HR	81.0 °F	/	39.9 %	/	62.8 gr/lb

	Instant Sensible (Btu/h)	Time Delay Sensible (Btu/h)	Latent (Btu/h)	Total (Btu/h)	Percent of Total (%)
Roof	0	0	0	0	0.0
Other Roof	0	0	0	0	0.0
Glass	194	397	0	591	35.0
Door	0	92	0	92	5.4
Wall	0	0	0	0	0.0
Below-Grade Wall	0	0	0	0	0.0
Other Wall	0	0	0	0	0.0
Partition	0	747	0	747	44.2
Exterior Floor	0	0	0	0	0.0
Interior Floor	0	0	0	0	0.0
Slab	0	-302	0	-302	-17.9
Other Floor	0	0	0	0	0.0
Infiltration	0	0	0	0	0.0
Envelope Subtotal	194	934	0	1128	-
People	0	0	0	0	0.0
Lights	149	218	0	367	21.7
RA Sensible (Lights)	171	0	0	171	10.1
Miscellaneous Loads	0	0	0	0	0.0
Internal Subtotal	319	218	0	538	-
RA (All Other)	0	0	0	0	0.0
DOA Direct to Room	0	0	0	0	0.0
Ceiling	0	41	0	41	2.5
Refrigeration	0	0	0	0	0.0
Service Water	0	0	0	0	0.0
HVAC Equipment Losses	0	0	0	0	0.0
Adj Air Transfer Heat	0	0	0	0	0.0
Sizing Factor Correction	0	0	0	0	0.0
Time Delay Correction	0	-17	0	-17	-1.0
Grand Total	513	1177	0	1690	100.0

Engineering Checks

Cooling tons	0.14	Input Ventilation cfm	15
Cooling cfm	163.02	Calculated Ventilation cfm	35
ft²/ton	1736.99	Number of People	0.00
cfm/ton	1,157.57	People per 1000 ft²	0
Conditioned ft²	244.6		

Conditions at Time of Heating Peak

Outside	DB / WB / HR	16.4 °F	/	12.6 °F	/	5.3 gr/lb
Room	DB / RH / HR	70.0 °F	/	4.9 %	/	5.2 gr/lb

	Instant Sensible (Btu/h)	Time Delay Sensible (Btu/h)	Latent (Btu/h)	Total (Btu/h)	Percent of Total (%)
Roof	0	0	0	0	0.0
Other Roof	0	0	0	0	0.0
Glass	-369	0	0	-369	65.8
Door	0	27	0	27	-4.8
Wall	0	0	0	0	0.0
Below-Grade Wall	0	0	0	0	0.0
Other Wall	0	0	0	0	0.0
Partition	0	-62	0	-62	11.1
Exterior Floor	0	0	0	0	0.0
Interior Floor	0	0	0	0	0.0
Slab	0	-3	0	-3	0.5
Other Floor	0	0	0	0	0.0
Infiltration	0	0	0	0	0.0
Envelope Subtotal	-369	-38	0	-407	-
People	0	0	0	0	0.0
Lights	0	0	0	0	0.0
RA Sensible (Lights)	0	0	0	0	0.0
Miscellaneous Loads	0	0	0	0	0.0
Internal Subtotal	0	0	0	0	-
RA (All Other)	0	0	0	0	0.0
DOA Direct to Room	0	0	0	0	0.0
Ceiling	0	-154	0	-154	27.4
Refrigeration	0	0	0	0	0.0
Service Water	0	0	0	0	0.0
HVAC Equipment Losses	0	0	0	0	0.0
Adj Air Transfer Heat	0	0	0	0	0.0
Sizing Factor Correction	0	0	0	0	0.0
Time Delay Correction	0	0	0	0	0.0
Grand Total	-369	-192	0	-561	100.0

Engineering Checks

Heating Mbh	-0.56	Input Ventilation cfm	15
Heating cfm	48.91	Calculated Ventilation cfm	14
ft²/Mbh	-436.26	Number of People	0.00
cfm/Mbh	-87.24	People per 1000 ft²	0
Conditioned ft²	244.6		

ROOM_01_141_FURNITURE STOR_R02

Conditions at Time of Cooling Peak

Outside	DB / WB / HR	84.6 °F	/	72.2 °F	/	99.5 gr/lb
Room	DB / RH / HR	81.0 °F	/	39.9 %	/	62.8 gr/lb

	Instant Sensible (Btu/h)	Time Delay Sensible (Btu/h)	Latent (Btu/h)	Total (Btu/h)	Percent of Total (%)
Roof	0	0	0	0	0.0
Other Roof	0	0	0	0	0.0
Glass	0	0	0	0	0.0
Door	0	-34	0	-34	-4.1
Wall	0	0	0	0	0.0
Below-Grade Wall	0	0	0	0	0.0
Other Wall	0	0	0	0	0.0
Partition	0	68	0	68	8.2
Exterior Floor	0	0	0	0	0.0
Interior Floor	0	0	0	0	0.0
Slab	0	-55	0	-55	-6.6
Other Floor	0	0	0	0	0.0
Infiltration	0	0	0	0	0.0
Envelope Subtotal	0	-21	0	-21	-
People	0	0	0	0	0.0
Lights	99	238	0	337	40.7
RA Sensible (Lights)	113	0	0	113	13.7
Miscellaneous Loads	219	227	0	446	53.8
Internal Subtotal	431	466	0	896	-
RA (All Other)	0	0	0	0	0.0
DOA Direct to Room	0	0	0	0	0.0
Ceiling	0	-47	0	-47	-5.6
Refrigeration	0	0	0	0	0.0
Service Water	0	0	0	0	0.0
HVAC Equipment Losses	0	0	0	0	0.0
Adj Air Transfer Heat	0	0	0	0	0.0
Sizing Factor Correction	0	0	0	0	0.0
Time Delay Correction	0	0	0	0	0.0
Grand Total	431	398	0	829	100.0

Engineering Checks

Cooling tons	0.07	Input Ventilation cfm	10
Cooling cfm	113.19	Calculated Ventilation cfm	24
ft²/ton	2457.70	Number of People	0.00
cfm/ton	1,638.40	People per 1000 ft²	0
Conditioned ft²	169.7		

Conditions at Time of Heating Peak

Outside	DB / WB / HR	32.0 °F	/	32.0 °F	/	0.0 gr/lb
Room	DB / RH / HR	32.0 °F	/	0.0 %	/	0.0 gr/lb

	Instant Sensible (Btu/h)	Time Delay Sensible (Btu/h)	Latent (Btu/h)	Total (Btu/h)	Percent of Total (%)
Roof	0	0	0	0	0.0
Other Roof	0	0	0	0	0.0
Glass	0	0	0	0	0.0
Door	0	0	0	0	0.0
Wall	0	0	0	0	0.0
Below-Grade Wall	0	0	0	0	0.0
Other Wall	0	0	0	0	0.0
Partition	0	0	0	0	0.0
Exterior Floor	0	0	0	0	0.0
Interior Floor	0	0	0	0	0.0
Slab	0	0	0	0	0.0
Other Floor	0	0	0	0	0.0
Infiltration	0	0	0	0	0.0
Envelope Subtotal	0	0	0	0	-
People	0	0	0	0	0.0
Lights	0	0	0	0	0.0
RA Sensible (Lights)	0	0	0	0	0.0
Miscellaneous Loads	0	0	0	0	0.0
Internal Subtotal	0	0	0	0	-
RA (All Other)	0	0	0	0	0.0
DOA Direct to Room	0	0	0	0	0.0
Ceiling	0	0	0	0	0.0
Refrigeration	0	0	0	0	0.0
Service Water	0	0	0	0	0.0
HVAC Equipment Losses	0	0	0	0	0.0
Adj Air Transfer Heat	0	0	0	0	0.0
Sizing Factor Correction	0	0	0	0	0.0
Time Delay Correction	0	0	0	0	0.0
Grand Total	0	0	0	0	100.0

Engineering Checks

Heating Mbh	0.00	Input Ventilation cfm	10
Heating cfm	33.96	Calculated Ventilation cfm	10
ft²/Mbh	0.00	Number of People	0.00
cfm/Mbh	0.00	People per 1000 ft²	0
Conditioned ft²	169.7		

ROOM_01_142_ELEC

Conditions at Time of Cooling Peak

Outside	DB / WB / HR	82.5 °F	/	71.6 °F	/	99.4 gr/lb
Room	DB / RH / HR	81.0 °F	/	39.9 %	/	62.8 gr/lb

	Instant Sensible (Btu/h)	Time Delay Sensible (Btu/h)	Latent (Btu/h)	Total (Btu/h)	Percent of Total (%)
Roof	0	0	0	0	0.0
Other Roof	0	0	0	0	0.0
Glass	0	0	0	0	0.0
Door	0	-28	0	-28	-0.8
Wall	0	0	0	0	0.0
Below-Grade Wall	0	0	0	0	0.0
Other Wall	0	0	0	0	0.0
Partition	0	-796	0	-796	-22.5
Exterior Floor	0	0	0	0	0.0
Interior Floor	0	0	0	0	0.0
Slab	0	-36	0	-36	-1.0
Other Floor	0	0	0	0	0.0
Infiltration	0	0	0	0	0.0
Envelope Subtotal	0	-861	0	-861	-
People	0	0	0	0	0.0
Lights	44	88	0	131	3.7
RA Sensible (Lights)	50	0	0	50	1.4
Miscellaneous Loads	2372	2053	0	4425	125.0
Internal Subtotal	2465	2141	0	4607	-
RA (All Other)	0	0	0	0	0.0
DOA Direct to Room	0	0	0	0	0.0
Ceiling	0	-206	0	-206	-5.8
Refrigeration	0	0	0	0	0.0
Service Water	0	0	0	0	0.0
HVAC Equipment Losses	0	0	0	0	0.0
Adj Air Transfer Heat	0	0	0	0	0.0
Sizing Factor Correction	0	0	0	0	0.0
Time Delay Correction	0	0	0	0	0.0
Grand Total	2465	1075	0	3540	100.0

Engineering Checks

Cooling tons	0.30	Input Ventilation cfm	123
Cooling cfm	122.82	Calculated Ventilation cfm	0
ft²/ton	381.32	Number of People	0.00
cfm/ton	416.25	People per 1000 ft²	0
Conditioned ft²	112.5		

Conditions at Time of Heating Peak

Outside	DB / WB / HR	32.0 °F	/	32.0 °F	/	0.0 gr/lb
Room	DB / RH / HR	32.0 °F	/	0.0 %	/	0.0 gr/lb

	Instant Sensible (Btu/h)	Time Delay Sensible (Btu/h)	Latent (Btu/h)	Total (Btu/h)	Percent of Total (%)
Roof	0	0	0	0	0.0
Other Roof	0	0	0	0	0.0
Glass	0	0	0	0	0.0
Door	0	0	0	0	0.0
Wall	0	0	0	0	0.0
Below-Grade Wall	0	0	0	0	0.0
Other Wall	0	0	0	0	0.0
Partition	0	0	0	0	0.0
Exterior Floor	0	0	0	0	0.0
Interior Floor	0	0	0	0	0.0
Slab	0	0	0	0	0.0
Other Floor	0	0	0	0	0.0
Infiltration	0	0	0	0	0.0
Envelope Subtotal	0	0	0	0	-
People	0	0	0	0	0.0
Lights	0	0	0	0	0.0
RA Sensible (Lights)	0	0	0	0	0.0
Miscellaneous Loads	0	0	0	0	0.0
Internal Subtotal	0	0	0	0	-
RA (All Other)	0	0	0	0	0.0
DOA Direct to Room	0	0	0	0	0.0
Ceiling	0	0	0	0	0.0
Refrigeration	0	0	0	0	0.0
Service Water	0	0	0	0	0.0
HVAC Equipment Losses	0	0	0	0	0.0
Adj Air Transfer Heat	0	0	0	0	0.0
Sizing Factor Correction	0	0	0	0	0.0
Time Delay Correction	0	0	0	0	0.0
Grand Total	0	0	0	0	100.0

Engineering Checks

Heating Mbh	0.00	Input Ventilation cfm	123
Heating cfm	122.82	Calculated Ventilation cfm	0
ft²/Mbh	0.00	Number of People	0.00
cfm/Mbh	0.00	People per 1000 ft²	0
Conditioned ft²	112.5		

ROOM_01_143_TELECOM

Conditions at Time of Cooling Peak

Outside	DB / WB / HR	82.5 °F	/	71.6 °F	/	99.4 gr/lb
Room	DB / RH / HR	81.0 °F	/	39.9 %	/	62.8 gr/lb

	Instant Sensible (Btu/h)	Time Delay Sensible (Btu/h)	Latent (Btu/h)	Total (Btu/h)	Percent of Total (%)
Roof	0	0	0	0	0.0
Other Roof	0	0	0	0	0.0
Glass	0	0	0	0	0.0
Door	0	7	0	7	1.3
Wall	0	0	0	0	0.0
Below-Grade Wall	0	0	0	0	0.0
Other Wall	0	0	0	0	0.0
Partition	0	104	0	104	20.3
Exterior Floor	0	0	0	0	0.0
Interior Floor	0	0	0	0	0.0
Slab	0	-21	0	-21	-4.0
Other Floor	0	0	0	0	0.0
Infiltration	0	0	0	0	0.0
Envelope Subtotal	0	91	0	91	-
People	0	0	0	0	0.0
Lights	47	66	0	113	21.9
RA Sensible (Lights)	54	0	0	54	10.4
Miscellaneous Loads	156	94	0	250	48.6
Internal Subtotal	256	160	0	416	-
RA (All Other)	0	0	0	0	0.0
DOA Direct to Room	0	0	0	0	0.0
Ceiling	0	7	0	7	1.4
Refrigeration	0	0	0	0	0.0
Service Water	0	0	0	0	0.0
HVAC Equipment Losses	0	0	0	0	0.0
Adj Air Transfer Heat	0	0	0	0	0.0
Sizing Factor Correction	0	0	0	0	0.0
Time Delay Correction	0	0	0	0	0.0
Grand Total	256	258	0	514	100.0

Engineering Checks

Cooling tons	0.04	Input Ventilation cfm	16
Cooling cfm	16.20	Calculated Ventilation cfm	0
ft²/ton	2817.62	Number of People	0.00
cfm/ton	378.15	People per 1000 ft²	0
Conditioned ft²	120.7		

Conditions at Time of Heating Peak

Outside	DB / WB / HR	32.0 °F	/	32.0 °F	/	0.0 gr/lb
Room	DB / RH / HR	32.0 °F	/	0.0 %	/	0.0 gr/lb

	Instant Sensible (Btu/h)	Time Delay Sensible (Btu/h)	Latent (Btu/h)	Total (Btu/h)	Percent of Total (%)
Roof	0	0	0	0	0.0
Other Roof	0	0	0	0	0.0
Glass	0	0	0	0	0.0
Door	0	0	0	0	0.0
Wall	0	0	0	0	0.0
Below-Grade Wall	0	0	0	0	0.0
Other Wall	0	0	0	0	0.0
Partition	0	0	0	0	0.0
Exterior Floor	0	0	0	0	0.0
Interior Floor	0	0	0	0	0.0
Slab	0	0	0	0	0.0
Other Floor	0	0	0	0	0.0
Infiltration	0	0	0	0	0.0
Envelope Subtotal	0	0	0	0	-
People	0	0	0	0	0.0
Lights	0	0	0	0	0.0
RA Sensible (Lights)	0	0	0	0	0.0
Miscellaneous Loads	0	0	0	0	0.0
Internal Subtotal	0	0	0	0	-
RA (All Other)	0	0	0	0	0.0
DOA Direct to Room	0	0	0	0	0.0
Ceiling	0	0	0	0	0.0
Refrigeration	0	0	0	0	0.0
Service Water	0	0	0	0	0.0
HVAC Equipment Losses	0	0	0	0	0.0
Adj Air Transfer Heat	0	0	0	0	0.0
Sizing Factor Correction	0	0	0	0	0.0
Time Delay Correction	0	0	0	0	0.0
Grand Total	0	0	0	0	100.0

Engineering Checks

Heating Mbh	0.00	Input Ventilation cfm	16
Heating cfm	16.20	Calculated Ventilation cfm	0
ft²/Mbh	0.00	Number of People	0.00
cfm/Mbh	0.00	People per 1000 ft²	0
Conditioned ft²	120.7		

ROOM_01_144_CONF RM_R02

Conditions at Time of Cooling Peak

Outside	DB / WB / HR	82.5 °F	/	71.6 °F	/	99.4 gr/lb
Room	DB / RH / HR	75.0 °F	/	61.5 %	/	79.7 gr/lb

	Instant Sensible (Btu/h)	Time Delay Sensible (Btu/h)	Latent (Btu/h)	Total (Btu/h)	Percent of Total (%)
Roof	0	0	0	0	0.0
Other Roof	0	0	0	0	0.0
Glass	0	0	0	0	0.0
Door	0	13	0	13	0.2
Wall	0	0	0	0	0.0
Below-Grade Wall	0	0	0	0	0.0
Other Wall	0	0	0	0	0.0
Partition	0	143	0	143	2.4
Exterior Floor	0	0	0	0	0.0
Interior Floor	0	0	0	0	0.0
Slab	0	-112	0	-112	-1.9
Other Floor	0	0	0	0	0.0
Infiltration	0	0	0	0	0.0
Envelope Subtotal	0	44	0	44	-
People	1050	1415	2000	4464	74.5
Lights	259	422	0	681	11.4
RA Sensible (Lights)	297	0	0	297	5.0
Miscellaneous Loads	294	206	0	500	8.3
Internal Subtotal	1900	2043	2000	5942	-
RA (All Other)	0	0	0	0	0.0
DOA Direct to Room	0	0	0	0	0.0
Ceiling	0	23	0	23	0.4
Refrigeration	0	0	0	0	0.0
Service Water	0	0	0	0	0.0
HVAC Equipment Losses	0	0	0	0	0.0
Adj Air Transfer Heat	0	0	0	0	0.0
Sizing Factor Correction	0	0	0	0	0.0
Time Delay Correction	0	-16	0	-16	-0.3
Grand Total	1900	2093	2000	5992	100.0

Engineering Checks

Cooling tons	0.50	Input Ventilation cfm	64
Cooling cfm	707.72	Calculated Ventilation cfm	150
ft²/ton	457.02	Number of People	10.00
cfm/ton	1,416.98	People per 1000 ft²	44
Conditioned ft²	228.2		

Conditions at Time of Heating Peak

Outside	DB / WB / HR	16.4 °F	/	12.6 °F	/	5.3 gr/lb
Room	DB / RH / HR	70.0 °F	/	4.9 %	/	5.2 gr/lb

	Instant Sensible (Btu/h)	Time Delay Sensible (Btu/h)	Latent (Btu/h)	Total (Btu/h)	Percent of Total (%)
Roof	0	0	0	0	0.0
Other Roof	0	0	0	0	0.0
Glass	0	0	0	0	0.0
Door	0	-6	0	-6	15.3
Wall	0	0	0	0	0.0
Below-Grade Wall	0	0	0	0	0.0
Other Wall	0	0	0	0	0.0
Partition	0	31	0	31	-74.3
Exterior Floor	0	0	0	0	0.0
Interior Floor	0	0	0	0	0.0
Slab	0	1	0	1	-2.1
Other Floor	0	0	0	0	0.0
Infiltration	0	0	0	0	0.0
Envelope Subtotal	0	26	0	26	-
People	0	0	0	0	0.0
Lights	0	0	0	0	0.0
RA Sensible (Lights)	0	0	0	0	0.0
Miscellaneous Loads	0	0	0	0	0.0
Internal Subtotal	0	0	0	0	-
RA (All Other)	0	0	0	0	0.0
DOA Direct to Room	0	0	0	0	0.0
Ceiling	0	-68	0	-68	161.0
Refrigeration	0	0	0	0	0.0
Service Water	0	0	0	0	0.0
HVAC Equipment Losses	0	0	0	0	0.0
Adj Air Transfer Heat	0	0	0	0	0.0
Sizing Factor Correction	0	0	0	0	0.0
Time Delay Correction	0	0	0	0	0.0
Grand Total	0	-42	0	-42	100.0

Engineering Checks

Heating Mbh	-0.04	Input Ventilation cfm	64
Heating cfm	212.31	Calculated Ventilation cfm	60
ft²/Mbh	-5398.62	Number of People	10.00
cfm/Mbh	-5,022.42	People per 1000 ft²	44
Conditioned ft²	228.2		

ROOM_01_145_FOCUS_R02

Conditions at Time of Cooling Peak

Outside	DB / WB / HR	87.8 °F	/	73.1 °F	/	99.5 gr/lb
Room	DB / RH / HR	75.0 °F	/	50.6 %	/	65.4 gr/lb

	Instant Sensible (Btu/h)	Time Delay Sensible (Btu/h)	Latent (Btu/h)	Total (Btu/h)	Percent of Total (%)
Roof	0	0	0	0	0.0
Other Roof	0	0	0	0	0.0
Glass	744	1131	0	1875	50.5
Door	0	-25	0	-25	-0.7
Wall	0	163	0	163	4.4
Below-Grade Wall	0	0	0	0	0.0
Other Wall	0	0	0	0	0.0
Partition	0	129	0	129	3.5
Exterior Floor	0	0	0	0	0.0
Interior Floor	0	0	0	0	0.0
Slab	0	-224	0	-224	-6.0
Other Floor	0	0	0	0	0.0
Infiltration	0	0	0	0	0.0
Envelope Subtotal	744	1174	0	1917	-
People	142	207	270	618	16.6
Lights	63	111	0	174	4.7
RA Sensible (Lights)	72	0	0	72	1.9
Miscellaneous Loads	552	422	0	975	26.2
Internal Subtotal	829	740	270	1839	-
RA (All Other)	0	0	0	0	0.0
DOA Direct to Room	0	0	0	0	0.0
Ceiling	0	-16	0	-16	-0.4
Refrigeration	0	0	0	0	0.0
Service Water	0	0	0	0	0.0
HVAC Equipment Losses	0	0	0	0	0.0
Adj Air Transfer Heat	0	0	0	0	0.0
Sizing Factor Correction	0	0	0	0	0.0
Time Delay Correction	0	-27	0	-27	-0.7
Grand Total	1573	1871	270	3713	100.0

Engineering Checks

Cooling tons	0.31	Input Ventilation cfm	11
Cooling cfm	154.30	Calculated Ventilation cfm	33
ft²/ton	225.43	Number of People	1.35
cfm/ton	498.54	People per 1000 ft²	19
Conditioned ft²	69.8		

Conditions at Time of Heating Peak

Outside	DB / WB / HR	16.4 °F	/	12.6 °F	/	5.3 gr/lb
Room	DB / RH / HR	70.0 °F	/	4.9 %	/	5.2 gr/lb

	Instant Sensible (Btu/h)	Time Delay Sensible (Btu/h)	Latent (Btu/h)	Total (Btu/h)	Percent of Total (%)
Roof	0	0	0	0	0.0
Other Roof	0	0	0	0	0.0
Glass	-724	0	0	-724	77.1
Door	0	16	0	16	-1.7
Wall	0	-125	0	-125	13.3
Below-Grade Wall	0	0	0	0	0.0
Other Wall	0	0	0	0	0.0
Partition	0	-38	0	-38	4.0
Exterior Floor	0	0	0	0	0.0
Interior Floor	0	0	0	0	0.0
Slab	0	-1	0	-1	0.1
Other Floor	0	0	0	0	0.0
Infiltration	0	0	0	0	0.0
Envelope Subtotal	-724	-147	0	-872	-
People	0	0	0	0	0.0
Lights	0	0	0	0	0.0
RA Sensible (Lights)	0	0	0	0	0.0
Miscellaneous Loads	0	0	0	0	0.0
Internal Subtotal	0	0	0	0	-
RA (All Other)	0	0	0	0	0.0
DOA Direct to Room	0	0	0	0	0.0
Ceiling	0	-68	0	-68	7.3
Refrigeration	0	0	0	0	0.0
Service Water	0	0	0	0	0.0
HVAC Equipment Losses	0	0	0	0	0.0
Adj Air Transfer Heat	0	0	0	0	0.0
Sizing Factor Correction	0	0	0	0	0.0
Time Delay Correction	0	0	0	0	0.0
Grand Total	-724	-216	0	-940	100.0

Engineering Checks

Heating Mbh	-0.94	Input Ventilation cfm	11
Heating cfm	46.29	Calculated Ventilation cfm	13
ft²/Mbh	-74.19	Number of People	1.35
cfm/Mbh	-49.23	People per 1000 ft²	19
Conditioned ft²	69.8		

ROOM_01_150_CONF OVERFLOW_R02

Conditions at Time of Cooling Peak

Outside	DB / WB / HR	83.6 °F	/	71.9 °F	/	99.4 gr/lb
Room	DB / RH / HR	75.0 °F	/	57.8 %	/	74.8 gr/lb

	Instant Sensible (Btu/h)	Time Delay Sensible (Btu/h)	Latent (Btu/h)	Total (Btu/h)	Percent of Total (%)
Roof	0	0	0	0	0.0
Other Roof	0	0	0	0	0.0
Glass	183	96	0	279	3.6
Door	0	-4	0	-4	0.0
Wall	0	0	0	0	0.0
Below-Grade Wall	0	0	0	0	0.0
Other Wall	0	0	0	0	0.0
Partition	0	-98	0	-98	-1.3
Exterior Floor	0	0	0	0	0.0
Interior Floor	0	0	0	0	0.0
Slab	0	-238	0	-238	-3.1
Other Floor	0	0	0	0	0.0
Infiltration	0	0	0	0	0.0
Envelope Subtotal	183	-244	0	-60	-
People	1050	1984	2000	5034	64.7
Lights	492	1115	0	1608	20.7
RA Sensible (Lights)	565	0	0	565	7.3
Miscellaneous Loads	560	559	0	1120	14.4
Internal Subtotal	2668	3659	2000	8326	-
RA (All Other)	0	0	0	0	0.0
DOA Direct to Room	0	0	0	0	0.0
Ceiling	0	-299	0	-299	-3.8
Refrigeration	0	0	0	0	0.0
Service Water	0	0	0	0	0.0
HVAC Equipment Losses	0	0	0	0	0.0
Adj Air Transfer Heat	0	0	0	0	0.0
Sizing Factor Correction	0	0	0	0	0.0
Time Delay Correction	0	-183	0	-183	-2.3
Grand Total	2851	2934	2000	7784	100.0

Engineering Checks

Cooling tons	0.65	Input Ventilation cfm	76
Cooling cfm	845.19	Calculated Ventilation cfm	180
ft²/ton	669.77	Number of People	9.99
cfm/ton	1,302.66	People per 1000 ft²	23
Conditioned ft²	434.4		

Conditions at Time of Heating Peak

Outside	DB / WB / HR	32.0 °F	/	32.0 °F	/	0.0 gr/lb
Room	DB / RH / HR	32.0 °F	/	0.0 %	/	0.0 gr/lb

	Instant Sensible (Btu/h)	Time Delay Sensible (Btu/h)	Latent (Btu/h)	Total (Btu/h)	Percent of Total (%)
Roof	0	0	0	0	0.0
Other Roof	0	0	0	0	0.0
Glass	0	0	0	0	0.0
Door	0	0	0	0	0.0
Wall	0	0	0	0	0.0
Below-Grade Wall	0	0	0	0	0.0
Other Wall	0	0	0	0	0.0
Partition	0	0	0	0	0.0
Exterior Floor	0	0	0	0	0.0
Interior Floor	0	0	0	0	0.0
Slab	0	0	0	0	0.0
Other Floor	0	0	0	0	0.0
Infiltration	0	0	0	0	0.0
Envelope Subtotal	0	0	0	0	-
People	0	0	0	0	0.0
Lights	0	0	0	0	0.0
RA Sensible (Lights)	0	0	0	0	0.0
Miscellaneous Loads	0	0	0	0	0.0
Internal Subtotal	0	0	0	0	-
RA (All Other)	0	0	0	0	0.0
DOA Direct to Room	0	0	0	0	0.0
Ceiling	0	0	0	0	0.0
Refrigeration	0	0	0	0	0.0
Service Water	0	0	0	0	0.0
HVAC Equipment Losses	0	0	0	0	0.0
Adj Air Transfer Heat	0	0	0	0	0.0
Sizing Factor Correction	0	0	0	0	0.0
Time Delay Correction	0	0	0	0	0.0
Grand Total	0	0	0	0	100.0

Engineering Checks

Heating Mbh	0.00	Input Ventilation cfm	76
Heating cfm	253.56	Calculated Ventilation cfm	72
ft²/Mbh	0.00	Number of People	9.99
cfm/Mbh	0.00	People per 1000 ft²	23
Conditioned ft²	434.4		

ROOM_01_151_CONF RM_R02

Conditions at Time of Cooling Peak

Outside	DB / WB / HR	82.5 °F	/	71.6 °F	/	99.4 gr/lb
Room	DB / RH / HR	75.0 °F	/	62.9 %	/	81.6 gr/lb

	Instant Sensible (Btu/h)	Time Delay Sensible (Btu/h)	Latent (Btu/h)	Total (Btu/h)	Percent of Total (%)
Roof	0	0	0	0	0.0
Other Roof	0	0	0	0	0.0
Glass	0	0	0	0	0.0
Door	0	119	0	119	0.6
Wall	0	0	0	0	0.0
Below-Grade Wall	0	0	0	0	0.0
Other Wall	0	0	0	0	0.0
Partition	0	227	0	227	1.1
Exterior Floor	0	0	0	0	0.0
Interior Floor	0	0	0	0	0.0
Slab	0	-382	0	-382	-1.9
Other Floor	0	0	0	0	0.0
Infiltration	0	0	0	0	0.0
Envelope Subtotal	0	-36	0	-36	-
People	3779	4768	7198	15745	78.2
Lights	810	1249	0	2059	10.2
RA Sensible (Lights)	930	0	0	930	4.6
Miscellaneous Loads	922	609	0	1531	7.6
Internal Subtotal	6441	6626	7198	20266	-
RA (All Other)	0	0	0	0	0.0
DOA Direct to Room	0	0	0	0	0.0
Ceiling	0	-48	0	-48	-0.2
Refrigeration	0	0	0	0	0.0
Service Water	0	0	0	0	0.0
HVAC Equipment Losses	0	0	0	0	0.0
Adj Air Transfer Heat	0	0	0	0	0.0
Sizing Factor Correction	0	0	0	0	0.0
Time Delay Correction	0	-58	0	-58	-0.3
Grand Total	6441	6484	7198	20123	100.0

Engineering Checks

Cooling tons	1.68	Input Ventilation cfm	223
Cooling cfm	2,476.58	Calculated Ventilation cfm	526
ft²/ton	426.32	Number of People	36.09
cfm/ton	1,476.57	People per 1000 ft²	50
Conditioned ft²	714.8		

Conditions at Time of Heating Peak

Outside	DB / WB / HR	32.0 °F	/	32.0 °F	/	0.0 gr/lb
Room	DB / RH / HR	32.0 °F	/	0.0 %	/	0.0 gr/lb

	Instant Sensible (Btu/h)	Time Delay Sensible (Btu/h)	Latent (Btu/h)	Total (Btu/h)	Percent of Total (%)
Roof	0	0	0	0	0.0
Other Roof	0	0	0	0	0.0
Glass	0	0	0	0	0.0
Door	0	0	0	0	0.0
Wall	0	0	0	0	0.0
Below-Grade Wall	0	0	0	0	0.0
Other Wall	0	0	0	0	0.0
Partition	0	0	0	0	0.0
Exterior Floor	0	0	0	0	0.0
Interior Floor	0	0	0	0	0.0
Slab	0	0	0	0	0.0
Other Floor	0	0	0	0	0.0
Infiltration	0	0	0	0	0.0
Envelope Subtotal	0	0	0	0	-
People	0	0	0	0	0.0
Lights	0	0	0	0	0.0
RA Sensible (Lights)	0	0	0	0	0.0
Miscellaneous Loads	0	0	0	0	0.0
Internal Subtotal	0	0	0	0	-
RA (All Other)	0	0	0	0	0.0
DOA Direct to Room	0	0	0	0	0.0
Ceiling	0	0	0	0	0.0
Refrigeration	0	0	0	0	0.0
Service Water	0	0	0	0	0.0
HVAC Equipment Losses	0	0	0	0	0.0
Adj Air Transfer Heat	0	0	0	0	0.0
Sizing Factor Correction	0	0	0	0	0.0
Time Delay Correction	0	0	0	0	0.0
Grand Total	0	0	0	0	100.0

Engineering Checks

Heating Mbh	0.00	Input Ventilation cfm	223
Heating cfm	742.97	Calculated Ventilation cfm	210
ft²/Mbh	0.00	Number of People	36.09
cfm/Mbh	0.00	People per 1000 ft²	50
Conditioned ft²	714.8		

ROOM_01_152_CONF RM_R02

Conditions at Time of Cooling Peak

Outside	DB / WB / HR	82.0 °F	/	70.9 °F	/	96.5 gr/lb
Room	DB / RH / HR	75.0 °F	/	63.8 %	/	82.8 gr/lb

	Instant Sensible (Btu/h)	Time Delay Sensible (Btu/h)	Latent (Btu/h)	Total (Btu/h)	Percent of Total (%)
Roof	0	0	0	0	0.0
Other Roof	0	0	0	0	0.0
Glass	0	0	0	0	0.0
Door	0	-16	0	-16	-0.1
Wall	0	0	0	0	0.0
Below-Grade Wall	0	0	0	0	0.0
Other Wall	0	0	0	0	0.0
Partition	0	-188	0	-188	-1.0
Exterior Floor	0	0	0	0	0.0
Interior Floor	0	0	0	0	0.0
Slab	0	-338	0	-338	-1.7
Other Floor	0	0	0	0	0.0
Infiltration	0	0	0	0	0.0
Envelope Subtotal	0	-542	0	-542	-
People	3779	4557	7198	15534	80.1
Lights	811	1188	0	1998	10.3
RA Sensible (Lights)	931	0	0	931	4.8
Miscellaneous Loads	923	579	0	1502	7.7
Internal Subtotal	6444	6324	7198	19966	-
RA (All Other)	0	0	0	0	0.0
DOA Direct to Room	0	0	0	0	0.0
Ceiling	0	29	0	29	0.1
Refrigeration	0	0	0	0	0.0
Service Water	0	0	0	0	0.0
HVAC Equipment Losses	0	0	0	0	0.0
Adj Air Transfer Heat	0	0	0	0	0.0
Sizing Factor Correction	0	0	0	0	0.0
Time Delay Correction	0	-58	0	-58	-0.3
Grand Total	6444	5752	7198	19394	100.0

Engineering Checks

Cooling tons	1.62	Input Ventilation cfm	223
Cooling cfm	2,477.05	Calculated Ventilation cfm	526
ft²/ton	442.82	Number of People	35.94
cfm/ton	1,532.40	People per 1000 ft²	50
Conditioned ft²	715.6		

Conditions at Time of Heating Peak

Outside	DB / WB / HR	32.0 °F	/	32.0 °F	/	0.0 gr/lb
Room	DB / RH / HR	32.0 °F	/	0.0 %	/	0.0 gr/lb

	Instant Sensible (Btu/h)	Time Delay Sensible (Btu/h)	Latent (Btu/h)	Total (Btu/h)	Percent of Total (%)
Roof	0	0	0	0	0.0
Other Roof	0	0	0	0	0.0
Glass	0	0	0	0	0.0
Door	0	0	0	0	0.0
Wall	0	0	0	0	0.0
Below-Grade Wall	0	0	0	0	0.0
Other Wall	0	0	0	0	0.0
Partition	0	0	0	0	0.0
Exterior Floor	0	0	0	0	0.0
Interior Floor	0	0	0	0	0.0
Slab	0	0	0	0	0.0
Other Floor	0	0	0	0	0.0
Infiltration	0	0	0	0	0.0
Envelope Subtotal	0	0	0	0	-
People	0	0	0	0	0.0
Lights	0	0	0	0	0.0
RA Sensible (Lights)	0	0	0	0	0.0
Miscellaneous Loads	0	0	0	0	0.0
Internal Subtotal	0	0	0	0	-
RA (All Other)	0	0	0	0	0.0
DOA Direct to Room	0	0	0	0	0.0
Ceiling	0	0	0	0	0.0
Refrigeration	0	0	0	0	0.0
Service Water	0	0	0	0	0.0
HVAC Equipment Losses	0	0	0	0	0.0
Adj Air Transfer Heat	0	0	0	0	0.0
Sizing Factor Correction	0	0	0	0	0.0
Time Delay Correction	0	0	0	0	0.0
Grand Total	0	0	0	0	100.0

Engineering Checks

Heating Mbh	0.00	Input Ventilation cfm	223
Heating cfm	743.11	Calculated Ventilation cfm	210
ft²/Mbh	0.00	Number of People	35.94
cfm/Mbh	0.00	People per 1000 ft²	50
Conditioned ft²	715.6		

ROOM_01_153_CONF RM_R02

Conditions at Time of Cooling Peak

Outside	DB / WB / HR	82.0 °F	/	70.9 °F	/	96.5 gr/lb
Room	DB / RH / HR	75.0 °F	/	59.4 %	/	77.0 gr/lb

	Instant Sensible (Btu/h)	Time Delay Sensible (Btu/h)	Latent (Btu/h)	Total (Btu/h)	Percent of Total (%)
Roof	0	0	0	0	0.0
Other Roof	0	0	0	0	0.0
Glass	0	0	0	0	0.0
Door	0	-1	0	-1	0.0
Wall	0	0	0	0	0.0
Below-Grade Wall	0	0	0	0	0.0
Other Wall	0	0	0	0	0.0
Partition	0	112	0	112	2.7
Exterior Floor	0	0	0	0	0.0
Interior Floor	0	0	0	0	0.0
Slab	0	-68	0	-68	-1.7
Other Floor	0	0	0	0	0.0
Infiltration	0	0	0	0	0.0
Envelope Subtotal	0	43	0	43	-
People	630	894	1200	2724	66.5
Lights	220	377	0	597	14.6
RA Sensible (Lights)	252	0	0	252	6.2
Miscellaneous Loads	250	184	0	434	10.6
Internal Subtotal	1352	1456	1200	4007	-
RA (All Other)	0	0	0	0	0.0
DOA Direct to Room	0	0	0	0	0.0
Ceiling	0	54	0	54	1.3
Refrigeration	0	0	0	0	0.0
Service Water	0	0	0	0	0.0
HVAC Equipment Losses	0	0	0	0	0.0
Adj Air Transfer Heat	0	0	0	0	0.0
Sizing Factor Correction	0	0	0	0	0.0
Time Delay Correction	0	-10	0	-10	-0.2
Grand Total	1352	1543	1200	4094	100.0

Engineering Checks

Cooling tons	0.34	Input Ventilation cfm	42
Cooling cfm	462.61	Calculated Ventilation cfm	98
ft²/ton	568.55	Number of People	6.01
cfm/ton	1,355.60	People per 1000 ft²	31
Conditioned ft²	194.0		

Conditions at Time of Heating Peak

Outside	DB / WB / HR	32.0 °F	/	32.0 °F	/	0.0 gr/lb
Room	DB / RH / HR	32.0 °F	/	0.0 %	/	0.0 gr/lb

	Instant Sensible (Btu/h)	Time Delay Sensible (Btu/h)	Latent (Btu/h)	Total (Btu/h)	Percent of Total (%)
Roof	0	0	0	0	0.0
Other Roof	0	0	0	0	0.0
Glass	0	0	0	0	0.0
Door	0	0	0	0	0.0
Wall	0	0	0	0	0.0
Below-Grade Wall	0	0	0	0	0.0
Other Wall	0	0	0	0	0.0
Partition	0	0	0	0	0.0
Exterior Floor	0	0	0	0	0.0
Interior Floor	0	0	0	0	0.0
Slab	0	0	0	0	0.0
Other Floor	0	0	0	0	0.0
Infiltration	0	0	0	0	0.0
Envelope Subtotal	0	0	0	0	-
People	0	0	0	0	0.0
Lights	0	0	0	0	0.0
RA Sensible (Lights)	0	0	0	0	0.0
Miscellaneous Loads	0	0	0	0	0.0
Internal Subtotal	0	0	0	0	-
RA (All Other)	0	0	0	0	0.0
DOA Direct to Room	0	0	0	0	0.0
Ceiling	0	0	0	0	0.0
Refrigeration	0	0	0	0	0.0
Service Water	0	0	0	0	0.0
HVAC Equipment Losses	0	0	0	0	0.0
Adj Air Transfer Heat	0	0	0	0	0.0
Sizing Factor Correction	0	0	0	0	0.0
Time Delay Correction	0	0	0	0	0.0
Grand Total	0	0	0	0	100.0

Engineering Checks

Heating Mbh	0.00	Input Ventilation cfm	42
Heating cfm	138.78	Calculated Ventilation cfm	39
ft²/Mbh	0.00	Number of People	6.01
cfm/Mbh	0.00	People per 1000 ft²	31
Conditioned ft²	194.0		

ROOM_01_154_CONF RM_R02

Conditions at Time of Cooling Peak

Outside	DB / WB / HR	82.5 °F	/	71.6 °F	/	99.4 gr/lb
Room	DB / RH / HR	75.0 °F	/	60.1 %	/	77.9 gr/lb

	Instant Sensible (Btu/h)	Time Delay Sensible (Btu/h)	Latent (Btu/h)	Total (Btu/h)	Percent of Total (%)
Roof	0	0	0	0	0.0
Other Roof	0	0	0	0	0.0
Glass	0	0	0	0	0.0
Door	0	-12	0	-12	-0.2
Wall	0	0	0	0	0.0
Below-Grade Wall	0	0	0	0	0.0
Other Wall	0	0	0	0	0.0
Partition	0	553	0	553	8.6
Exterior Floor	0	0	0	0	0.0
Interior Floor	0	0	0	0	0.0
Slab	0	-107	0	-107	-1.7
Other Floor	0	0	0	0	0.0
Infiltration	0	0	0	0	0.0
Envelope Subtotal	0	434	0	434	-
People	1050	1517	2000	4566	71.2
Lights	243	425	0	667	10.4
RA Sensible (Lights)	279	0	0	279	4.3
Miscellaneous Loads	276	207	0	483	7.5
Internal Subtotal	1847	2149	2000	5996	-
RA (All Other)	0	0	0	0	0.0
DOA Direct to Room	0	0	0	0	0.0
Ceiling	0	2	0	2	0.0
Refrigeration	0	0	0	0	0.0
Service Water	0	0	0	0	0.0
HVAC Equipment Losses	0	0	0	0	0.0
Adj Air Transfer Heat	0	0	0	0	0.0
Sizing Factor Correction	0	0	0	0	0.0
Time Delay Correction	0	-16	0	-16	-0.3
Grand Total	1847	2568	2000	6415	100.0

Engineering Checks

Cooling tons	0.53	Input Ventilation cfm	63
Cooling cfm	698.37	Calculated Ventilation cfm	148
ft²/ton	400.72	Number of People	10.00
cfm/ton	1,306.09	People per 1000 ft²	47
Conditioned ft²	214.2		

Conditions at Time of Heating Peak

Outside	DB / WB / HR	32.0 °F	/	32.0 °F	/	0.0 gr/lb
Room	DB / RH / HR	32.0 °F	/	0.0 %	/	0.0 gr/lb

	Instant Sensible (Btu/h)	Time Delay Sensible (Btu/h)	Latent (Btu/h)	Total (Btu/h)	Percent of Total (%)
Roof	0	0	0	0	0.0
Other Roof	0	0	0	0	0.0
Glass	0	0	0	0	0.0
Door	0	0	0	0	0.0
Wall	0	0	0	0	0.0
Below-Grade Wall	0	0	0	0	0.0
Other Wall	0	0	0	0	0.0
Partition	0	0	0	0	0.0
Exterior Floor	0	0	0	0	0.0
Interior Floor	0	0	0	0	0.0
Slab	0	0	0	0	0.0
Other Floor	0	0	0	0	0.0
Infiltration	0	0	0	0	0.0
Envelope Subtotal	0	0	0	0	-
People	0	0	0	0	0.0
Lights	0	0	0	0	0.0
RA Sensible (Lights)	0	0	0	0	0.0
Miscellaneous Loads	0	0	0	0	0.0
Internal Subtotal	0	0	0	0	-
RA (All Other)	0	0	0	0	0.0
DOA Direct to Room	0	0	0	0	0.0
Ceiling	0	0	0	0	0.0
Refrigeration	0	0	0	0	0.0
Service Water	0	0	0	0	0.0
HVAC Equipment Losses	0	0	0	0	0.0
Adj Air Transfer Heat	0	0	0	0	0.0
Sizing Factor Correction	0	0	0	0	0.0
Time Delay Correction	0	0	0	0	0.0
Grand Total	0	0	0	0	100.0

Engineering Checks

Heating Mbh	0.00	Input Ventilation cfm	63
Heating cfm	209.51	Calculated Ventilation cfm	59
ft²/Mbh	0.00	Number of People	10.00
cfm/Mbh	0.00	People per 1000 ft²	47
Conditioned ft²	214.2		

ROOM_01_155_MOTHERS RM_R01

Conditions at Time of Cooling Peak

Outside	DB / WB / HR	84.2 °F	/	68.6 °F	/	80.3 gr/lb
Room	DB / RH / HR	75.0 °F	/	51.3 %	/	66.3 gr/lb

	Instant Sensible (Btu/h)	Time Delay Sensible (Btu/h)	Latent (Btu/h)	Total (Btu/h)	Percent of Total (%)
Roof	0	0	0	0	0.0
Other Roof	0	0	0	0	0.0
Glass	0	0	0	0	0.0
Door	0	-10	0	-10	-0.5
Wall	0	0	0	0	0.0
Below-Grade Wall	0	0	0	0	0.0
Other Wall	0	0	0	0	0.0
Partition	0	-2	0	-2	-0.1
Exterior Floor	0	0	0	0	0.0
Interior Floor	0	0	0	0	0.0
Slab	0	-5	0	-5	-0.2
Other Floor	0	0	0	0	0.0
Infiltration	0	0	0	0	0.0
Envelope Subtotal	0	-17	0	-17	-
People	105	142	200	447	20.7
Lights	134	240	0	374	17.3
RA Sensible (Lights)	154	0	0	154	7.1
Miscellaneous Loads	677	520	0	1198	55.5
Internal Subtotal	1070	902	200	2172	-
RA (All Other)	0	0	0	0	0.0
DOA Direct to Room	0	0	0	0	0.0
Ceiling	0	3	0	3	0.1
Refrigeration	0	0	0	0	0.0
Service Water	0	0	0	0	0.0
HVAC Equipment Losses	0	0	0	0	0.0
Adj Air Transfer Heat	0	0	0	0	0.0
Sizing Factor Correction	0	0	0	0	0.0
Time Delay Correction	0	-2	0	-2	-0.1
Grand Total	1070	886	200	2156	100.0

Engineering Checks

Cooling tons	0.18	Input Ventilation cfm	13
Cooling cfm	142.78	Calculated Ventilation cfm	22
ft²/ton	728.57	Number of People	1.00
cfm/ton	794.56	People per 1000 ft²	8
Conditioned ft²	130.9		

Conditions at Time of Heating Peak

Outside	DB / WB / HR	16.4 °F	/	12.6 °F	/	5.3 gr/lb
Room	DB / RH / HR	70.0 °F	/	4.9 %	/	5.2 gr/lb

	Instant Sensible (Btu/h)	Time Delay Sensible (Btu/h)	Latent (Btu/h)	Total (Btu/h)	Percent of Total (%)
Roof	0	0	0	0	0.0
Other Roof	0	0	0	0	0.0
Glass	0	0	0	0	0.0
Door	0	1	0	1	-3.9
Wall	0	0	0	0	0.0
Below-Grade Wall	0	0	0	0	0.0
Other Wall	0	0	0	0	0.0
Partition	0	1	0	1	-3.7
Exterior Floor	0	0	0	0	0.0
Interior Floor	0	0	0	0	0.0
Slab	0	3	0	3	-12.0
Other Floor	0	0	0	0	0.0
Infiltration	0	0	0	0	0.0
Envelope Subtotal	0	5	0	5	-
People	0	0	0	0	0.0
Lights	0	0	0	0	0.0
RA Sensible (Lights)	0	0	0	0	0.0
Miscellaneous Loads	0	0	0	0	0.0
Internal Subtotal	0	0	0	0	-
RA (All Other)	0	0	0	0	0.0
DOA Direct to Room	0	0	0	0	0.0
Ceiling	0	-32	0	-32	119.6
Refrigeration	0	0	0	0	0.0
Service Water	0	0	0	0	0.0
HVAC Equipment Losses	0	0	0	0	0.0
Adj Air Transfer Heat	0	0	0	0	0.0
Sizing Factor Correction	0	0	0	0	0.0
Time Delay Correction	0	0	0	0	0.0
Grand Total	0	-27	0	-27	100.0

Engineering Checks

Heating Mbh	-0.03	Input Ventilation cfm	13
Heating cfm	42.84	Calculated Ventilation cfm	12
ft²/Mbh	-4880.11	Number of People	1.00
cfm/Mbh	-1,596.93	People per 1000 ft²	8
Conditioned ft²	130.9		

ROOM_01_156_WOMEN'S TOILET_R01

Conditions at Time of Cooling Peak

Outside	DB / WB / HR	82.0 °F	/	70.9 °F	/	96.5 gr/lb
Room	DB / RH / HR	75.0 °F	/	49.2 %	/	63.6 gr/lb

	Instant Sensible (Btu/h)	Time Delay Sensible (Btu/h)	Latent (Btu/h)	Total (Btu/h)	Percent of Total (%)
Roof	0	0	0	0	0.0
Other Roof	0	0	0	0	0.0
Glass	0	0	0	0	0.0
Door	0	21	0	21	1.1
Wall	0	0	0	0	0.0
Below-Grade Wall	0	0	0	0	0.0
Other Wall	0	0	0	0	0.0
Partition	0	262	0	262	14.4
Exterior Floor	0	0	0	0	0.0
Interior Floor	0	0	0	0	0.0
Slab	0	15	0	15	0.8
Other Floor	0	0	0	0	0.0
Infiltration	0	0	0	0	0.0
Envelope Subtotal	0	298	0	298	-
People	24	35	38	97	5.3
Lights	221	346	0	568	31.3
RA Sensible (Lights)	254	0	0	254	14.0
Miscellaneous Loads	316	212	0	528	29.1
Internal Subtotal	816	593	38	1447	-
RA (All Other)	0	0	0	0	0.0
DOA Direct to Room	0	0	0	0	0.0
Ceiling	0	69	0	69	3.8
Refrigeration	0	0	0	0	0.0
Service Water	0	0	0	0	0.0
HVAC Equipment Losses	0	0	0	0	0.0
Adj Air Transfer Heat	0	0	0	0	0.0
Sizing Factor Correction	0	0	0	0	0.0
Time Delay Correction	0	0	0	0	0.0
Grand Total	816	959	38	1813	100.0

Engineering Checks

Cooling tons	0.15	Input Ventilation cfm	0
Cooling cfm	69.59	Calculated Ventilation cfm	11
ft²/ton	1623.52	Number of People	0.25
cfm/ton	460.43	People per 1000 ft²	1
Conditioned ft²	245.3		

Conditions at Time of Heating Peak

Outside	DB / WB / HR	16.4 °F	/	12.6 °F	/	5.3 gr/lb
Room	DB / RH / HR	70.0 °F	/	4.9 %	/	5.3 gr/lb

	Instant Sensible (Btu/h)	Time Delay Sensible (Btu/h)	Latent (Btu/h)	Total (Btu/h)	Percent of Total (%)
Roof	0	0	0	0	0.0
Other Roof	0	0	0	0	0.0
Glass	0	0	0	0	0.0
Door	0	5	0	5	-54.5
Wall	0	0	0	0	0.0
Below-Grade Wall	0	0	0	0	0.0
Other Wall	0	0	0	0	0.0
Partition	0	23	0	23	-251.2
Exterior Floor	0	0	0	0	0.0
Interior Floor	0	0	0	0	0.0
Slab	0	16	0	16	-176.0
Other Floor	0	0	0	0	0.0
Infiltration	0	0	0	0	0.0
Envelope Subtotal	0	43	0	43	-
People	0	0	0	0	0.0
Lights	0	0	0	0	0.0
RA Sensible (Lights)	0	0	0	0	0.0
Miscellaneous Loads	0	0	0	0	0.0
Internal Subtotal	0	0	0	0	-
RA (All Other)	0	0	0	0	0.0
DOA Direct to Room	0	0	0	0	0.0
Ceiling	0	-47	0	-47	523.8
Refrigeration	0	0	0	0	0.0
Service Water	0	0	0	0	0.0
HVAC Equipment Losses	0	0	0	0	0.0
Adj Air Transfer Heat	0	0	0	0	0.0
Sizing Factor Correction	0	0	0	0	0.0
Time Delay Correction	0	-5	0	-5	57.9
Grand Total	0	-9	0	-9	100.0

Engineering Checks

Heating Mbh	-0.01	Input Ventilation cfm	0
Heating cfm	20.88	Calculated Ventilation cfm	6
ft²/Mbh	-27355.42	Number of People	0.25
cfm/Mbh	-2,327.88	People per 1000 ft²	1
Conditioned ft²	245.3		

ROOM_01_157_MEN'S TOILET_R01

Conditions at Time of Cooling Peak

Outside	DB / WB / HR	82.5 °F	/	71.6 °F	/	99.4 gr/lb
Room	DB / RH / HR	75.0 °F	/	49.2 %	/	63.6 gr/lb

	Instant Sensible (Btu/h)	Time Delay Sensible (Btu/h)	Latent (Btu/h)	Total (Btu/h)	Percent of Total (%)
Roof	0	0	0	0	0.0
Other Roof	0	0	0	0	0.0
Glass	0	0	0	0	0.0
Door	0	14	0	14	0.7
Wall	0	0	0	0	0.0
Below-Grade Wall	0	0	0	0	0.0
Other Wall	0	0	0	0	0.0
Partition	0	446	0	446	21.3
Exterior Floor	0	0	0	0	0.0
Interior Floor	0	0	0	0	0.0
Slab	0	6	0	6	0.3
Other Floor	0	0	0	0	0.0
Infiltration	0	0	0	0	0.0
Envelope Subtotal	0	466	0	466	-
People	26	36	41	103	4.9
Lights	239	361	0	600	28.6
RA Sensible (Lights)	275	0	0	275	13.1
Miscellaneous Loads	342	221	0	563	26.8
Internal Subtotal	881	618	41	1540	-
RA (All Other)	0	0	0	0	0.0
DOA Direct to Room	0	0	0	0	0.0
Ceiling	0	90	0	90	4.3
Refrigeration	0	0	0	0	0.0
Service Water	0	0	0	0	0.0
HVAC Equipment Losses	0	0	0	0	0.0
Adj Air Transfer Heat	0	0	0	0	0.0
Sizing Factor Correction	0	0	0	0	0.0
Time Delay Correction	0	0	0	0	0.0
Grand Total	881	1174	41	2096	100.0

Engineering Checks

Cooling tons	0.17	Input Ventilation cfm	0
Cooling cfm	81.46	Calculated Ventilation cfm	12
ft²/ton	1516.66	Number of People	0.26
cfm/ton	466.23	People per 1000 ft²	1
Conditioned ft²	264.9		

Conditions at Time of Heating Peak

Outside	DB / WB / HR	16.4 °F	/	12.6 °F	/	5.3 gr/lb
Room	DB / RH / HR	70.0 °F	/	4.9 %	/	5.3 gr/lb

	Instant Sensible (Btu/h)	Time Delay Sensible (Btu/h)	Latent (Btu/h)	Total (Btu/h)	Percent of Total (%)
Roof	0	0	0	0	0.0
Other Roof	0	0	0	0	0.0
Glass	0	0	0	0	0.0
Door	0	6	0	6	-44.2
Wall	0	0	0	0	0.0
Below-Grade Wall	0	0	0	0	0.0
Other Wall	0	0	0	0	0.0
Partition	0	18	0	18	-127.1
Exterior Floor	0	0	0	0	0.0
Interior Floor	0	0	0	0	0.0
Slab	0	11	0	11	-77.5
Other Floor	0	0	0	0	0.0
Infiltration	0	0	0	0	0.0
Envelope Subtotal	0	35	0	35	-
People	0	0	0	0	0.0
Lights	0	0	0	0	0.0
RA Sensible (Lights)	0	0	0	0	0.0
Miscellaneous Loads	0	0	0	0	0.0
Internal Subtotal	0	0	0	0	-
RA (All Other)	0	0	0	0	0.0
DOA Direct to Room	0	0	0	0	0.0
Ceiling	0	-49	0	-49	348.7
Refrigeration	0	0	0	0	0.0
Service Water	0	0	0	0	0.0
HVAC Equipment Losses	0	0	0	0	0.0
Adj Air Transfer Heat	0	0	0	0	0.0
Sizing Factor Correction	0	0	0	0	0.0
Time Delay Correction	0	0	0	0	0.0
Grand Total	0	-14	0	-14	100.0

Engineering Checks

Heating Mbh	-0.01	Input Ventilation cfm	0
Heating cfm	24.44	Calculated Ventilation cfm	7
ft²/Mbh	-19011.90	Number of People	0.26
cfm/Mbh	-1,753.68	People per 1000 ft²	1
Conditioned ft²	264.9		

ROOM_01_158_ BREAK RM_R02

Conditions at Time of Cooling Peak

Outside	DB / WB / HR	79.9 °F	/	70.0 °F	/	94.9 gr/lb
Room	DB / RH / HR	74.9 °F	/	62.7 %	/	81.1 gr/lb

	Instant Sensible (Btu/h)	Time Delay Sensible (Btu/h)	Latent (Btu/h)	Total (Btu/h)	Percent of Total (%)
Roof	0	0	0	0	0.0
Other Roof	0	0	0	0	0.0
Glass	70	63	0	133	1.2
Door	0	0	0	0	0.0
Wall	0	0	0	0	0.0
Below-Grade Wall	0	0	0	0	0.0
Other Wall	0	0	0	0	0.0
Partition	0	-659	0	-659	-6.1
Exterior Floor	0	0	0	0	0.0
Interior Floor	0	0	0	0	0.0
Slab	0	-88	0	-88	-0.8
Other Floor	0	0	0	0	0.0
Infiltration	0	0	0	0	0.0
Envelope Subtotal	70	-684	0	-614	-
People	1030	1331	2452	4813	44.2
Lights	90	130	0	220	2.0
RA Sensible (Lights)	103	0	0	103	0.9
Miscellaneous Loads	3222	2072	1541	6835	62.8
Internal Subtotal	4445	3533	3993	11971	-
RA (All Other)	0	0	0	0	0.0
DOA Direct to Room	0	0	0	0	0.0
Ceiling	0	-171	0	-171	-1.6
Refrigeration	0	0	0	0	0.0
Service Water	0	0	0	0	0.0
HVAC Equipment Losses	0	0	0	0	0.0
Adj Air Transfer Heat	0	0	0	0	0.0
Sizing Factor Correction	0	0	0	0	0.0
Time Delay Correction	0	-304	0	-304	-2.8
Grand Total	4515	2374	3993	10882	100.0

Engineering Checks

Cooling tons	0.91	Input Ventilation cfm	61
Cooling cfm	673.87	Calculated Ventilation cfm	103
ft²/ton	147.55	Number of People	8.94
cfm/ton	742.95	People per 1000 ft²	67
Conditioned ft²	133.8		

Conditions at Time of Heating Peak

Outside	DB / WB / HR	16.4 °F	/	12.6 °F	/	5.3 gr/lb
Room	DB / RH / HR	70.0 °F	/	4.9 %	/	5.2 gr/lb

	Instant Sensible (Btu/h)	Time Delay Sensible (Btu/h)	Latent (Btu/h)	Total (Btu/h)	Percent of Total (%)
Roof	0	0	0	0	0.0
Other Roof	0	0	0	0	0.0
Glass	-79	0	0	-79	81.1
Door	0	0	0	0	0.0
Wall	0	0	0	0	0.0
Below-Grade Wall	0	0	0	0	0.0
Other Wall	0	0	0	0	0.0
Partition	0	17	0	17	-17.5
Exterior Floor	0	0	0	0	0.0
Interior Floor	0	0	0	0	0.0
Slab	0	0	0	0	0.3
Other Floor	0	0	0	0	0.0
Infiltration	0	0	0	0	0.0
Envelope Subtotal	-79	17	0	-62	-
People	0	0	0	0	0.0
Lights	0	0	0	0	0.0
RA Sensible (Lights)	0	0	0	0	0.0
Miscellaneous Loads	0	0	0	0	0.0
Internal Subtotal	0	0	0	0	-
RA (All Other)	0	0	0	0	0.0
DOA Direct to Room	0	0	0	0	0.0
Ceiling	0	-35	0	-35	36.0
Refrigeration	0	0	0	0	0.0
Service Water	0	0	0	0	0.0
HVAC Equipment Losses	0	0	0	0	0.0
Adj Air Transfer Heat	0	0	0	0	0.0
Sizing Factor Correction	0	0	0	0	0.0
Time Delay Correction	0	0	0	0	0.0
Grand Total	-79	-18	0	-97	100.0

Engineering Checks

Heating Mbh	-0.10	Input Ventilation cfm	61
Heating cfm	202.16	Calculated Ventilation cfm	57
ft²/Mbh	-1376.85	Number of People	8.94
cfm/Mbh	-2,080.18	People per 1000 ft²	67
Conditioned ft²	133.8		

ROOM_01_159_OFFICE_R01

Conditions at Time of Cooling Peak

Outside	DB / WB / HR	85.7 °F	/	72.5 °F	/	99.5 gr/lb
Room	DB / RH / HR	75.0 °F	/	51.2 %	/	66.2 gr/lb

	Instant Sensible (Btu/h)	Time Delay Sensible (Btu/h)	Latent (Btu/h)	Total (Btu/h)	Percent of Total (%)
Roof	0	0	0	0	0.0
Other Roof	0	0	0	0	0.0
Glass	0	0	0	0	0.0
Door	0	9	0	9	0.5
Wall	0	0	0	0	0.0
Below-Grade Wall	0	0	0	0	0.0
Other Wall	0	0	0	0	0.0
Partition	0	264	0	264	15.5
Exterior Floor	0	0	0	0	0.0
Interior Floor	0	0	0	0	0.0
Slab	0	-9	0	-9	-0.5
Other Floor	0	0	0	0	0.0
Infiltration	0	0	0	0	0.0
Envelope Subtotal	0	264	0	264	-
People	77	100	148	325	19.1
Lights	151	236	0	387	22.7
RA Sensible (Lights)	173	0	0	173	10.2
Miscellaneous Loads	302	202	0	505	29.6
Internal Subtotal	704	538	148	1390	-
RA (All Other)	0	0	0	0	0.0
DOA Direct to Room	0	0	0	0	0.0
Ceiling	0	54	0	54	3.2
Refrigeration	0	0	0	0	0.0
Service Water	0	0	0	0	0.0
HVAC Equipment Losses	0	0	0	0	0.0
Adj Air Transfer Heat	0	0	0	0	0.0
Sizing Factor Correction	0	0	0	0	0.0
Time Delay Correction	0	-1	0	-1	-0.1
Grand Total	704	856	148	1707	100.0

Engineering Checks

Cooling tons	0.14	Input Ventilation cfm	13
Cooling cfm	139.44	Calculated Ventilation cfm	21
ft²/ton	1038.07	Number of People	0.74
cfm/ton	979.84	People per 1000 ft²	5
Conditioned ft²	147.7		

Conditions at Time of Heating Peak

Outside	DB / WB / HR	16.4 °F	/	12.6 °F	/	5.3 gr/lb
Room	DB / RH / HR	70.0 °F	/	4.9 %	/	5.2 gr/lb

	Instant Sensible (Btu/h)	Time Delay Sensible (Btu/h)	Latent (Btu/h)	Total (Btu/h)	Percent of Total (%)
Roof	0	0	0	0	0.0
Other Roof	0	0	0	0	0.0
Glass	0	0	0	0	0.0
Door	0	1	0	1	-1.5
Wall	0	0	0	0	0.0
Below-Grade Wall	0	0	0	0	0.0
Other Wall	0	0	0	0	0.0
Partition	0	-41	0	-41	50.6
Exterior Floor	0	0	0	0	0.0
Interior Floor	0	0	0	0	0.0
Slab	0	0	0	0	0.3
Other Floor	0	0	0	0	0.0
Infiltration	0	0	0	0	0.0
Envelope Subtotal	0	-40	0	-40	-
People	0	0	0	0	0.0
Lights	0	0	0	0	0.0
RA Sensible (Lights)	0	0	0	0	0.0
Miscellaneous Loads	0	0	0	0	0.0
Internal Subtotal	0	0	0	0	-
RA (All Other)	0	0	0	0	0.0
DOA Direct to Room	0	0	0	0	0.0
Ceiling	0	-41	0	-41	50.6
Refrigeration	0	0	0	0	0.0
Service Water	0	0	0	0	0.0
HVAC Equipment Losses	0	0	0	0	0.0
Adj Air Transfer Heat	0	0	0	0	0.0
Sizing Factor Correction	0	0	0	0	0.0
Time Delay Correction	0	0	0	0	0.0
Grand Total	0	-81	0	-81	100.0

Engineering Checks

Heating Mbh	-0.08	Input Ventilation cfm	13
Heating cfm	41.83	Calculated Ventilation cfm	12
ft²/Mbh	-1822.62	Number of People	0.74
cfm/Mbh	-516.21	People per 1000 ft²	5
Conditioned ft²	147.7		

ROOM_01_160_OFFICE_R01

Conditions at Time of Cooling Peak

Outside	DB / WB / HR	82.5 °F	/	71.6 °F	/	99.4 gr/lb
Room	DB / RH / HR	75.0 °F	/	51.2 %	/	66.2 gr/lb

	Instant Sensible (Btu/h)	Time Delay Sensible (Btu/h)	Latent (Btu/h)	Total (Btu/h)	Percent of Total (%)
Roof	0	0	0	0	0.0
Other Roof	0	0	0	0	0.0
Glass	0	0	0	0	0.0
Door	0	5	0	5	0.2
Wall	0	0	0	0	0.0
Below-Grade Wall	0	0	0	0	0.0
Other Wall	0	0	0	0	0.0
Partition	0	34	0	34	1.5
Exterior Floor	0	0	0	0	0.0
Interior Floor	0	0	0	0	0.0
Slab	0	0	0	0	0.0
Other Floor	0	0	0	0	0.0
Infiltration	0	0	0	0	0.0
Envelope Subtotal	0	39	0	39	-
People	105	144	200	449	20.1
Lights	145	234	0	379	17.0
RA Sensible (Lights)	166	0	0	166	7.4
Miscellaneous Loads	699	485	0	1184	53.1
Internal Subtotal	1115	863	200	2179	-
RA (All Other)	0	0	0	0	0.0
DOA Direct to Room	0	0	0	0	0.0
Ceiling	0	16	0	16	0.7
Refrigeration	0	0	0	0	0.0
Service Water	0	0	0	0	0.0
HVAC Equipment Losses	0	0	0	0	0.0
Adj Air Transfer Heat	0	0	0	0	0.0
Sizing Factor Correction	0	0	0	0	0.0
Time Delay Correction	0	-2	0	-2	-0.1
Grand Total	1115	917	200	2232	100.0

Engineering Checks

Cooling tons	0.19	Input Ventilation cfm	13
Cooling cfm	149.96	Calculated Ventilation cfm	23
ft²/ton	761.63	Number of People	1.00
cfm/ton	806.08	People per 1000 ft²	7
Conditioned ft²	141.7		

Conditions at Time of Heating Peak

Outside	DB / WB / HR	16.4 °F	/	12.6 °F	/	5.3 gr/lb
Room	DB / RH / HR	70.0 °F	/	4.9 %	/	5.2 gr/lb

	Instant Sensible (Btu/h)	Time Delay Sensible (Btu/h)	Latent (Btu/h)	Total (Btu/h)	Percent of Total (%)
Roof	0	0	0	0	0.0
Other Roof	0	0	0	0	0.0
Glass	0	0	0	0	0.0
Door	0	0	0	0	-0.3
Wall	0	0	0	0	0.0
Below-Grade Wall	0	0	0	0	0.0
Other Wall	0	0	0	0	0.0
Partition	0	-7	0	-7	19.8
Exterior Floor	0	0	0	0	0.0
Interior Floor	0	0	0	0	0.0
Slab	0	2	0	2	-4.6
Other Floor	0	0	0	0	0.0
Infiltration	0	0	0	0	0.0
Envelope Subtotal	0	-6	0	-6	-
People	0	0	0	0	0.0
Lights	0	0	0	0	0.0
RA Sensible (Lights)	0	0	0	0	0.0
Miscellaneous Loads	0	0	0	0	0.0
Internal Subtotal	0	0	0	0	-
RA (All Other)	0	0	0	0	0.0
DOA Direct to Room	0	0	0	0	0.0
Ceiling	0	-32	0	-32	85.1
Refrigeration	0	0	0	0	0.0
Service Water	0	0	0	0	0.0
HVAC Equipment Losses	0	0	0	0	0.0
Adj Air Transfer Heat	0	0	0	0	0.0
Sizing Factor Correction	0	0	0	0	0.0
Time Delay Correction	0	0	0	0	0.0
Grand Total	0	-37	0	-37	100.0

Engineering Checks

Heating Mbh	-0.04	Input Ventilation cfm	13
Heating cfm	44.99	Calculated Ventilation cfm	13
ft²/Mbh	-3785.33	Number of People	1.00
cfm/Mbh	-1,202.14	People per 1000 ft²	7
Conditioned ft²	141.7		

ROOM_01_160A_CORR_R01

Conditions at Time of Cooling Peak

Outside	DB / WB / HR	76.7 °F	/	66.2 °F	/	80.2 gr/lb
Room	DB / RH / HR	81.0 °F	/	40.0 %	/	63.0 gr/lb

	Instant Sensible (Btu/h)	Time Delay Sensible (Btu/h)	Latent (Btu/h)	Total (Btu/h)	Percent of Total (%)
Roof	0	0	0	0	0.0
Other Roof	0	0	0	0	0.0
Glass	73	45	0	118	34.2
Door	0	-65	0	-65	-18.9
Wall	0	0	0	0	0.0
Below-Grade Wall	0	0	0	0	0.0
Other Wall	0	0	0	0	0.0
Partition	0	-300	0	-300	-86.9
Exterior Floor	0	0	0	0	0.0
Interior Floor	0	0	0	0	0.0
Slab	0	11	0	11	3.2
Other Floor	0	0	0	0	0.0
Infiltration	0	0	0	0	0.0
Envelope Subtotal	73	-309	0	-236	-
People	0	0	0	0	0.0
Lights	147	140	0	288	83.4
RA Sensible (Lights)	169	0	0	169	49.0
Miscellaneous Loads	0	0	0	0	0.0
Internal Subtotal	316	140	0	457	-
RA (All Other)	0	0	0	0	0.0
DOA Direct to Room	0	0	0	0	0.0
Ceiling	0	-44	0	-44	-12.9
Refrigeration	0	0	0	0	0.0
Service Water	0	0	0	0	0.0
HVAC Equipment Losses	0	0	0	0	0.0
Adj Air Transfer Heat	0	0	0	0	0.0
Sizing Factor Correction	0	0	0	0	0.0
Time Delay Correction	0	168	0	168	48.8
Grand Total	389	-45	0	345	100.0

Engineering Checks

Cooling tons	0.03	Input Ventilation cfm	15
Cooling cfm	161.41	Calculated Ventilation cfm	25
ft²/ton	8424.17	Number of People	0.00
cfm/ton	5,615.28	People per 1000 ft²	0
Conditioned ft²	242.1		

Conditions at Time of Heating Peak

Outside	DB / WB / HR	16.4 °F	/	12.6 °F	/	5.3 gr/lb
Room	DB / RH / HR	70.0 °F	/	4.9 %	/	5.2 gr/lb

	Instant Sensible (Btu/h)	Time Delay Sensible (Btu/h)	Latent (Btu/h)	Total (Btu/h)	Percent of Total (%)
Roof	0	0	0	0	0.0
Other Roof	0	0	0	0	0.0
Glass	-110	0	0	-110	140.2
Door	0	14	0	14	-18.0
Wall	0	0	0	0	0.0
Below-Grade Wall	0	0	0	0	0.0
Other Wall	0	0	0	0	0.0
Partition	0	76	0	76	-96.4
Exterior Floor	0	0	0	0	0.0
Interior Floor	0	0	0	0	0.0
Slab	0	2	0	2	-3.2
Other Floor	0	0	0	0	0.0
Infiltration	0	0	0	0	0.0
Envelope Subtotal	-110	93	0	-18	-
People	0	0	0	0	0.0
Lights	0	0	0	0	0.0
RA Sensible (Lights)	0	0	0	0	0.0
Miscellaneous Loads	0	0	0	0	0.0
Internal Subtotal	0	0	0	0	-
RA (All Other)	0	0	0	0	0.0
DOA Direct to Room	0	0	0	0	0.0
Ceiling	0	-61	0	-61	77.4
Refrigeration	0	0	0	0	0.0
Service Water	0	0	0	0	0.0
HVAC Equipment Losses	0	0	0	0	0.0
Adj Air Transfer Heat	0	0	0	0	0.0
Sizing Factor Correction	0	0	0	0	0.0
Time Delay Correction	0	0	0	0	0.0
Grand Total	-110	32	0	-79	100.0

Engineering Checks

Heating Mbh	-0.08	Input Ventilation cfm	15
Heating cfm	48.42	Calculated Ventilation cfm	14
ft²/Mbh	-3073.02	Number of People	0.00
cfm/Mbh	-614.63	People per 1000 ft²	0
Conditioned ft²	242.1		

ROOM_01_161_OFFICE_R01

Conditions at Time of Cooling Peak

Outside	DB / WB / HR	80.2 °F	/	70.9 °F	/	99.4 gr/lb
Room	DB / RH / HR	75.0 °F	/	51.3 %	/	66.3 gr/lb

	Instant Sensible (Btu/h)	Time Delay Sensible (Btu/h)	Latent (Btu/h)	Total (Btu/h)	Percent of Total (%)
Roof	0	0	0	0	0.0
Other Roof	0	0	0	0	0.0
Glass	0	0	0	0	0.0
Door	0	6	0	6	0.3
Wall	0	0	0	0	0.0
Below-Grade Wall	0	0	0	0	0.0
Other Wall	0	0	0	0	0.0
Partition	0	-37	0	-37	-1.7
Exterior Floor	0	0	0	0	0.0
Interior Floor	0	0	0	0	0.0
Slab	0	4	0	4	0.2
Other Floor	0	0	0	0	0.0
Infiltration	0	0	0	0	0.0
Envelope Subtotal	0	-27	0	-27	-
People	105	148	200	453	20.8
Lights	146	237	0	382	17.6
RA Sensible (Lights)	167	0	0	167	7.7
Miscellaneous Loads	701	488	0	1189	54.7
Internal Subtotal	1119	873	200	2191	-
RA (All Other)	0	0	0	0	0.0
DOA Direct to Room	0	0	0	0	0.0
Ceiling	0	11	0	11	0.5
Refrigeration	0	0	0	0	0.0
Service Water	0	0	0	0	0.0
HVAC Equipment Losses	0	0	0	0	0.0
Adj Air Transfer Heat	0	0	0	0	0.0
Sizing Factor Correction	0	0	0	0	0.0
Time Delay Correction	0	-2	0	-2	-0.1
Grand Total	1119	856	200	2174	100.0

Engineering Checks

Cooling tons	0.18	Input Ventilation cfm	14
Cooling cfm	150.49	Calculated Ventilation cfm	23
ft²/ton	785.96	Number of People	1.00
cfm/ton	830.34	People per 1000 ft²	7
Conditioned ft²	142.4		

Conditions at Time of Heating Peak

Outside	DB / WB / HR	16.4 °F	/	12.6 °F	/	5.3 gr/lb
Room	DB / RH / HR	70.0 °F	/	4.9 %	/	5.2 gr/lb

	Instant Sensible (Btu/h)	Time Delay Sensible (Btu/h)	Latent (Btu/h)	Total (Btu/h)	Percent of Total (%)
Roof	0	0	0	0	0.0
Other Roof	0	0	0	0	0.0
Glass	0	0	0	0	0.0
Door	0	0	0	0	0.9
Wall	0	0	0	0	0.0
Below-Grade Wall	0	0	0	0	0.0
Other Wall	0	0	0	0	0.0
Partition	0	0	0	0	0.3
Exterior Floor	0	0	0	0	0.0
Interior Floor	0	0	0	0	0.0
Slab	0	4	0	4	-14.2
Other Floor	0	0	0	0	0.0
Infiltration	0	0	0	0	0.0
Envelope Subtotal	0	3	0	3	-
People	0	0	0	0	0.0
Lights	0	0	0	0	0.0
RA Sensible (Lights)	0	0	0	0	0.0
Miscellaneous Loads	0	0	0	0	0.0
Internal Subtotal	0	0	0	0	-
RA (All Other)	0	0	0	0	0.0
DOA Direct to Room	0	0	0	0	0.0
Ceiling	0	-29	0	-29	113.0
Refrigeration	0	0	0	0	0.0
Service Water	0	0	0	0	0.0
HVAC Equipment Losses	0	0	0	0	0.0
Adj Air Transfer Heat	0	0	0	0	0.0
Sizing Factor Correction	0	0	0	0	0.0
Time Delay Correction	0	0	0	0	0.0
Grand Total	0	-26	0	-26	100.0

Engineering Checks

Heating Mbh	-0.03	Input Ventilation cfm	14
Heating cfm	45.15	Calculated Ventilation cfm	13
ft²/Mbh	-5506.37	Number of People	1.00
cfm/Mbh	-1,745.51	People per 1000 ft²	7
Conditioned ft²	142.4		

ROOM_01_162_OFFICE_R01

Conditions at Time of Cooling Peak

Outside	DB / WB / HR	79.6 °F	/	70.2 °F	/	96.5 gr/lb
Room	DB / RH / HR	75.0 °F	/	51.2 %	/	66.2 gr/lb

	Instant Sensible (Btu/h)	Time Delay Sensible (Btu/h)	Latent (Btu/h)	Total (Btu/h)	Percent of Total (%)
Roof	0	0	0	0	0.0
Other Roof	0	0	0	0	0.0
Glass	0	0	0	0	0.0
Door	0	6	0	6	0.3
Wall	0	0	0	0	0.0
Below-Grade Wall	0	0	0	0	0.0
Other Wall	0	0	0	0	0.0
Partition	0	-29	0	-29	-1.3
Exterior Floor	0	0	0	0	0.0
Interior Floor	0	0	0	0	0.0
Slab	0	6	0	6	0.3
Other Floor	0	0	0	0	0.0
Infiltration	0	0	0	0	0.0
Envelope Subtotal	0	-16	0	-16	-
People	105	148	200	453	20.4
Lights	151	246	0	397	17.9
RA Sensible (Lights)	174	0	0	174	7.8
Miscellaneous Loads	712	497	0	1209	54.3
Internal Subtotal	1142	891	200	2233	-
RA (All Other)	0	0	0	0	0.0
DOA Direct to Room	0	0	0	0	0.0
Ceiling	0	10	0	10	0.5
Refrigeration	0	0	0	0	0.0
Service Water	0	0	0	0	0.0
HVAC Equipment Losses	0	0	0	0	0.0
Adj Air Transfer Heat	0	0	0	0	0.0
Sizing Factor Correction	0	0	0	0	0.0
Time Delay Correction	0	-2	0	-2	-0.1
Grand Total	1142	883	200	2225	100.0

Engineering Checks

Cooling tons	0.19	Input Ventilation cfm	14
Cooling cfm	154.15	Calculated Ventilation cfm	24
ft²/ton	797.66	Number of People	1.00
cfm/ton	831.16	People per 1000 ft²	7
Conditioned ft²	147.9		

Conditions at Time of Heating Peak

Outside	DB / WB / HR	16.4 °F	/	12.6 °F	/	5.3 gr/lb
Room	DB / RH / HR	70.0 °F	/	4.9 %	/	5.2 gr/lb

	Instant Sensible (Btu/h)	Time Delay Sensible (Btu/h)	Latent (Btu/h)	Total (Btu/h)	Percent of Total (%)
Roof	0	0	0	0	0.0
Other Roof	0	0	0	0	0.0
Glass	0	0	0	0	0.0
Door	0	0	0	0	0.4
Wall	0	0	0	0	0.0
Below-Grade Wall	0	0	0	0	0.0
Other Wall	0	0	0	0	0.0
Partition	0	-2	0	-2	8.1
Exterior Floor	0	0	0	0	0.0
Interior Floor	0	0	0	0	0.0
Slab	0	4	0	4	-12.6
Other Floor	0	0	0	0	0.0
Infiltration	0	0	0	0	0.0
Envelope Subtotal	0	1	0	1	-
People	0	0	0	0	0.0
Lights	0	0	0	0	0.0
RA Sensible (Lights)	0	0	0	0	0.0
Miscellaneous Loads	0	0	0	0	0.0
Internal Subtotal	0	0	0	0	-
RA (All Other)	0	0	0	0	0.0
DOA Direct to Room	0	0	0	0	0.0
Ceiling	0	-31	0	-31	104.1
Refrigeration	0	0	0	0	0.0
Service Water	0	0	0	0	0.0
HVAC Equipment Losses	0	0	0	0	0.0
Adj Air Transfer Heat	0	0	0	0	0.0
Sizing Factor Correction	0	0	0	0	0.0
Time Delay Correction	0	0	0	0	0.0
Grand Total	0	-30	0	-30	100.0

Engineering Checks

Heating Mbh	-0.03	Input Ventilation cfm	14
Heating cfm	46.25	Calculated Ventilation cfm	13
ft²/Mbh	-4968.50	Number of People	1.00
cfm/Mbh	-1,553.48	People per 1000 ft²	7
Conditioned ft²	147.9		

ROOM_01_163_OFFICE_R01

Conditions at Time of Cooling Peak

Outside	DB / WB / HR	84.2 °F	/	68.6 °F	/	80.3 gr/lb
Room	DB / RH / HR	75.0 °F	/	51.1 %	/	66.2 gr/lb

	Instant Sensible (Btu/h)	Time Delay Sensible (Btu/h)	Latent (Btu/h)	Total (Btu/h)	Percent of Total (%)
Roof	0	0	0	0	0.0
Other Roof	0	0	0	0	0.0
Glass	0	0	0	0	0.0
Door	0	4	0	4	0.2
Wall	0	0	0	0	0.0
Below-Grade Wall	0	0	0	0	0.0
Other Wall	0	0	0	0	0.0
Partition	0	35	0	35	1.5
Exterior Floor	0	0	0	0	0.0
Interior Floor	0	0	0	0	0.0
Slab	0	0	0	0	0.0
Other Floor	0	0	0	0	0.0
Infiltration	0	0	0	0	0.0
Envelope Subtotal	0	39	0	39	-
People	105	135	200	440	19.5
Lights	145	247	0	392	17.4
RA Sensible (Lights)	166	0	0	166	7.4
Miscellaneous Loads	699	512	0	1211	53.7
Internal Subtotal	1115	894	200	2209	-
RA (All Other)	0	0	0	0	0.0
DOA Direct to Room	0	0	0	0	0.0
Ceiling	0	8	0	8	0.4
Refrigeration	0	0	0	0	0.0
Service Water	0	0	0	0	0.0
HVAC Equipment Losses	0	0	0	0	0.0
Adj Air Transfer Heat	0	0	0	0	0.0
Sizing Factor Correction	0	0	0	0	0.0
Time Delay Correction	0	-2	0	-2	-0.1
Grand Total	1115	939	200	2255	100.0

Engineering Checks

Cooling tons	0.19	Input Ventilation cfm	13
Cooling cfm	149.96	Calculated Ventilation cfm	23
ft²/ton	754.03	Number of People	1.00
cfm/ton	798.00	People per 1000 ft²	7
Conditioned ft²	141.7		

Conditions at Time of Heating Peak

Outside	DB / WB / HR	16.4 °F	/	12.6 °F	/	5.3 gr/lb
Room	DB / RH / HR	70.0 °F	/	4.9 %	/	5.2 gr/lb

	Instant Sensible (Btu/h)	Time Delay Sensible (Btu/h)	Latent (Btu/h)	Total (Btu/h)	Percent of Total (%)
Roof	0	0	0	0	0.0
Other Roof	0	0	0	0	0.0
Glass	0	0	0	0	0.0
Door	0	1	0	1	-1.2
Wall	0	0	0	0	0.0
Below-Grade Wall	0	0	0	0	0.0
Other Wall	0	0	0	0	0.0
Partition	0	-23	0	-23	40.4
Exterior Floor	0	0	0	0	0.0
Interior Floor	0	0	0	0	0.0
Slab	0	1	0	1	-2.5
Other Floor	0	0	0	0	0.0
Infiltration	0	0	0	0	0.0
Envelope Subtotal	0	-21	0	-21	-
People	0	0	0	0	0.0
Lights	0	0	0	0	0.0
RA Sensible (Lights)	0	0	0	0	0.0
Miscellaneous Loads	0	0	0	0	0.0
Internal Subtotal	0	0	0	0	-
RA (All Other)	0	0	0	0	0.0
DOA Direct to Room	0	0	0	0	0.0
Ceiling	0	-36	0	-36	63.3
Refrigeration	0	0	0	0	0.0
Service Water	0	0	0	0	0.0
HVAC Equipment Losses	0	0	0	0	0.0
Adj Air Transfer Heat	0	0	0	0	0.0
Sizing Factor Correction	0	0	0	0	0.0
Time Delay Correction	0	0	0	0	0.0
Grand Total	0	-56	0	-56	100.0

Engineering Checks

Heating Mbh	-0.06	Input Ventilation cfm	13
Heating cfm	44.99	Calculated Ventilation cfm	13
ft²/Mbh	-2517.76	Number of People	1.00
cfm/Mbh	-799.54	People per 1000 ft²	7
Conditioned ft²	141.7		

ROOM_01_164_OFFICE_R01

Conditions at Time of Cooling Peak

Outside	DB / WB / HR	84.2 °F	/	68.6 °F	/	80.3 gr/lb
Room	DB / RH / HR	75.0 °F	/	51.0 %	/	65.9 gr/lb

	Instant Sensible (Btu/h)	Time Delay Sensible (Btu/h)	Latent (Btu/h)	Total (Btu/h)	Percent of Total (%)
Roof	0	0	0	0	0.0
Other Roof	0	0	0	0	0.0
Glass	0	0	0	0	0.0
Door	0	4	0	4	0.2
Wall	0	0	0	0	0.0
Below-Grade Wall	0	0	0	0	0.0
Other Wall	0	0	0	0	0.0
Partition	0	161	0	161	6.7
Exterior Floor	0	0	0	0	0.0
Interior Floor	0	0	0	0	0.0
Slab	0	4	0	4	0.2
Other Floor	0	0	0	0	0.0
Infiltration	0	0	0	0	0.0
Envelope Subtotal	0	169	0	169	-
People	105	127	200	432	17.9
Lights	153	243	0	396	16.5
RA Sensible (Lights)	176	0	0	176	7.3
Miscellaneous Loads	717	486	0	1203	49.9
Internal Subtotal	1151	856	200	2207	-
RA (All Other)	0	0	0	0	0.0
DOA Direct to Room	0	0	0	0	0.0
Ceiling	0	35	0	35	1.5
Refrigeration	0	0	0	0	0.0
Service Water	0	0	0	0	0.0
HVAC Equipment Losses	0	0	0	0	0.0
Adj Air Transfer Heat	0	0	0	0	0.0
Sizing Factor Correction	0	0	0	0	0.0
Time Delay Correction	0	-2	0	-2	-0.1
Grand Total	1151	1058	200	2410	100.0

Engineering Checks

Cooling tons	0.20	Input Ventilation cfm	14
Cooling cfm	155.62	Calculated Ventilation cfm	24
ft²/ton	747.28	Number of People	1.00
cfm/ton	774.81	People per 1000 ft²	7
Conditioned ft²	150.0		

Conditions at Time of Heating Peak

Outside	DB / WB / HR	16.4 °F	/	12.6 °F	/	5.3 gr/lb
Room	DB / RH / HR	70.0 °F	/	4.9 %	/	5.3 gr/lb

	Instant Sensible (Btu/h)	Time Delay Sensible (Btu/h)	Latent (Btu/h)	Total (Btu/h)	Percent of Total (%)
Roof	0	0	0	0	0.0
Other Roof	0	0	0	0	0.0
Glass	0	0	0	0	0.0
Door	0	-1	0	-1	5.2
Wall	0	0	0	0	0.0
Below-Grade Wall	0	0	0	0	0.0
Other Wall	0	0	0	0	0.0
Partition	0	21	0	21	-121.8
Exterior Floor	0	0	0	0	0.0
Interior Floor	0	0	0	0	0.0
Slab	0	2	0	2	-11.3
Other Floor	0	0	0	0	0.0
Infiltration	0	0	0	0	0.0
Envelope Subtotal	0	22	0	22	-
People	0	0	0	0	0.0
Lights	0	0	0	0	0.0
RA Sensible (Lights)	0	0	0	0	0.0
Miscellaneous Loads	0	0	0	0	0.0
Internal Subtotal	0	0	0	0	-
RA (All Other)	0	0	0	0	0.0
DOA Direct to Room	0	0	0	0	0.0
Ceiling	0	-39	0	-39	227.9
Refrigeration	0	0	0	0	0.0
Service Water	0	0	0	0	0.0
HVAC Equipment Losses	0	0	0	0	0.0
Adj Air Transfer Heat	0	0	0	0	0.0
Sizing Factor Correction	0	0	0	0	0.0
Time Delay Correction	0	0	0	0	0.0
Grand Total	0	-17	0	-17	100.0

Engineering Checks

Heating Mbh	-0.02	Input Ventilation cfm	14
Heating cfm	46.69	Calculated Ventilation cfm	13
ft²/Mbh	-8692.71	Number of People	1.00
cfm/Mbh	-2,704.33	People per 1000 ft²	7
Conditioned ft²	150.0		

ROOM_01_165_OFFICE_R01

Conditions at Time of Cooling Peak

Outside	DB / WB / HR	80.2 °F	/	70.9 °F	/	99.4 gr/lb
Room	DB / RH / HR	75.0 °F	/	51.0 %	/	66.0 gr/lb

	Instant Sensible (Btu/h)	Time Delay Sensible (Btu/h)	Latent (Btu/h)	Total (Btu/h)	Percent of Total (%)
Roof	0	0	0	0	0.0
Other Roof	0	0	0	0	0.0
Glass	0	0	0	0	0.0
Door	0	3	0	3	0.1
Wall	0	0	0	0	0.0
Below-Grade Wall	0	0	0	0	0.0
Other Wall	0	0	0	0	0.0
Partition	0	123	0	123	5.2
Exterior Floor	0	0	0	0	0.0
Interior Floor	0	0	0	0	0.0
Slab	0	4	0	4	0.2
Other Floor	0	0	0	0	0.0
Infiltration	0	0	0	0	0.0
Envelope Subtotal	0	129	0	129	-
People	105	150	200	455	19.1
Lights	148	244	0	393	16.5
RA Sensible (Lights)	170	0	0	170	7.2
Miscellaneous Loads	706	499	0	1205	50.7
Internal Subtotal	1130	893	200	2223	-
RA (All Other)	0	0	0	0	0.0
DOA Direct to Room	0	0	0	0	0.0
Ceiling	0	28	0	28	1.2
Refrigeration	0	0	0	0	0.0
Service Water	0	0	0	0	0.0
HVAC Equipment Losses	0	0	0	0	0.0
Adj Air Transfer Heat	0	0	0	0	0.0
Sizing Factor Correction	0	0	0	0	0.0
Time Delay Correction	0	-2	0	-2	-0.1
Grand Total	1130	1049	200	2379	100.0

Engineering Checks

Cooling tons	0.20	Input Ventilation cfm	14
Cooling cfm	152.23	Calculated Ventilation cfm	23
ft²/ton	731.44	Number of People	1.00
cfm/ton	767.75	People per 1000 ft²	7
Conditioned ft²	145.0		

Conditions at Time of Heating Peak

Outside	DB / WB / HR	32.0 °F	/	32.0 °F	/	0.0 gr/lb
Room	DB / RH / HR	32.0 °F	/	0.0 %	/	0.0 gr/lb

	Instant Sensible (Btu/h)	Time Delay Sensible (Btu/h)	Latent (Btu/h)	Total (Btu/h)	Percent of Total (%)
Roof	0	0	0	0	0.0
Other Roof	0	0	0	0	0.0
Glass	0	0	0	0	0.0
Door	0	0	0	0	0.0
Wall	0	0	0	0	0.0
Below-Grade Wall	0	0	0	0	0.0
Other Wall	0	0	0	0	0.0
Partition	0	0	0	0	0.0
Exterior Floor	0	0	0	0	0.0
Interior Floor	0	0	0	0	0.0
Slab	0	0	0	0	0.0
Other Floor	0	0	0	0	0.0
Infiltration	0	0	0	0	0.0
Envelope Subtotal	0	0	0	0	-
People	0	0	0	0	0.0
Lights	0	0	0	0	0.0
RA Sensible (Lights)	0	0	0	0	0.0
Miscellaneous Loads	0	0	0	0	0.0
Internal Subtotal	0	0	0	0	-
RA (All Other)	0	0	0	0	0.0
DOA Direct to Room	0	0	0	0	0.0
Ceiling	0	0	0	0	0.0
Refrigeration	0	0	0	0	0.0
Service Water	0	0	0	0	0.0
HVAC Equipment Losses	0	0	0	0	0.0
Adj Air Transfer Heat	0	0	0	0	0.0
Sizing Factor Correction	0	0	0	0	0.0
Time Delay Correction	0	0	0	0	0.0
Grand Total	0	0	0	0	100.0

Engineering Checks

Heating Mbh	0.00	Input Ventilation cfm	14
Heating cfm	45.67	Calculated Ventilation cfm	13
ft²/Mbh	0.00	Number of People	1.00
cfm/Mbh	0.00	People per 1000 ft²	7
Conditioned ft²	145.0		

ROOM_01_166_OFFICE_R01

Conditions at Time of Cooling Peak

Outside	DB / WB / HR	80.2 °F	/	70.9 °F	/	99.4 gr/lb
Room	DB / RH / HR	75.0 °F	/	51.1 %	/	66.1 gr/lb

	Instant Sensible (Btu/h)	Time Delay Sensible (Btu/h)	Latent (Btu/h)	Total (Btu/h)	Percent of Total (%)
Roof	0	0	0	0	0.0
Other Roof	0	0	0	0	0.0
Glass	0	0	0	0	0.0
Door	0	4	0	4	0.2
Wall	0	0	0	0	0.0
Below-Grade Wall	0	0	0	0	0.0
Other Wall	0	0	0	0	0.0
Partition	0	40	0	40	1.7
Exterior Floor	0	0	0	0	0.0
Interior Floor	0	0	0	0	0.0
Slab	0	4	0	4	0.2
Other Floor	0	0	0	0	0.0
Infiltration	0	0	0	0	0.0
Envelope Subtotal	0	48	0	48	-
People	105	148	200	453	19.7
Lights	148	241	0	389	16.9
RA Sensible (Lights)	170	0	0	170	7.4
Miscellaneous Loads	706	492	0	1198	52.0
Internal Subtotal	1130	881	200	2211	-
RA (All Other)	0	0	0	0	0.0
DOA Direct to Room	0	0	0	0	0.0
Ceiling	0	48	0	48	2.1
Refrigeration	0	0	0	0	0.0
Service Water	0	0	0	0	0.0
HVAC Equipment Losses	0	0	0	0	0.0
Adj Air Transfer Heat	0	0	0	0	0.0
Sizing Factor Correction	0	0	0	0	0.0
Time Delay Correction	0	-2	0	-2	-0.1
Grand Total	1130	975	200	2305	100.0

Engineering Checks

Cooling tons	0.19	Input Ventilation cfm	14
Cooling cfm	152.18	Calculated Ventilation cfm	23
ft²/ton	754.49	Number of People	1.00
cfm/ton	792.24	People per 1000 ft²	7
Conditioned ft²	144.9		

Conditions at Time of Heating Peak

Outside	DB / WB / HR	32.0 °F	/	32.0 °F	/	0.0 gr/lb
Room	DB / RH / HR	32.0 °F	/	0.0 %	/	0.0 gr/lb

	Instant Sensible (Btu/h)	Time Delay Sensible (Btu/h)	Latent (Btu/h)	Total (Btu/h)	Percent of Total (%)
Roof	0	0	0	0	0.0
Other Roof	0	0	0	0	0.0
Glass	0	0	0	0	0.0
Door	0	0	0	0	0.0
Wall	0	0	0	0	0.0
Below-Grade Wall	0	0	0	0	0.0
Other Wall	0	0	0	0	0.0
Partition	0	0	0	0	0.0
Exterior Floor	0	0	0	0	0.0
Interior Floor	0	0	0	0	0.0
Slab	0	0	0	0	0.0
Other Floor	0	0	0	0	0.0
Infiltration	0	0	0	0	0.0
Envelope Subtotal	0	0	0	0	-
People	0	0	0	0	0.0
Lights	0	0	0	0	0.0
RA Sensible (Lights)	0	0	0	0	0.0
Miscellaneous Loads	0	0	0	0	0.0
Internal Subtotal	0	0	0	0	-
RA (All Other)	0	0	0	0	0.0
DOA Direct to Room	0	0	0	0	0.0
Ceiling	0	0	0	0	0.0
Refrigeration	0	0	0	0	0.0
Service Water	0	0	0	0	0.0
HVAC Equipment Losses	0	0	0	0	0.0
Adj Air Transfer Heat	0	0	0	0	0.0
Sizing Factor Correction	0	0	0	0	0.0
Time Delay Correction	0	0	0	0	0.0
Grand Total	0	0	0	0	100.0

Engineering Checks

Heating Mbh	0.00	Input Ventilation cfm	14
Heating cfm	45.65	Calculated Ventilation cfm	13
ft²/Mbh	0.00	Number of People	1.00
cfm/Mbh	0.00	People per 1000 ft²	7
Conditioned ft²	144.9		

ROOM_01_167_OFFICE_R01

Conditions at Time of Cooling Peak

Outside	DB / WB / HR	82.5 °F	/	71.6 °F	/	99.4 gr/lb
Room	DB / RH / HR	75.0 °F	/	51.0 %	/	66.0 gr/lb

	Instant Sensible (Btu/h)	Time Delay Sensible (Btu/h)	Latent (Btu/h)	Total (Btu/h)	Percent of Total (%)
Roof	0	0	0	0	0.0
Other Roof	0	0	0	0	0.0
Glass	0	0	0	0	0.0
Door	0	3	0	3	0.1
Wall	0	0	0	0	0.0
Below-Grade Wall	0	0	0	0	0.0
Other Wall	0	0	0	0	0.0
Partition	0	53	0	53	2.2
Exterior Floor	0	0	0	0	0.0
Interior Floor	0	0	0	0	0.0
Slab	0	-1	0	-1	0.0
Other Floor	0	0	0	0	0.0
Infiltration	0	0	0	0	0.0
Envelope Subtotal	0	55	0	55	-
People	105	149	200	454	19.2
Lights	151	252	0	403	17.0
RA Sensible (Lights)	173	0	0	173	7.3
Miscellaneous Loads	712	509	0	1221	51.6
Internal Subtotal	1141	910	200	2251	-
RA (All Other)	0	0	0	0	0.0
DOA Direct to Room	0	0	0	0	0.0
Ceiling	0	64	0	64	2.7
Refrigeration	0	0	0	0	0.0
Service Water	0	0	0	0	0.0
HVAC Equipment Losses	0	0	0	0	0.0
Adj Air Transfer Heat	0	0	0	0	0.0
Sizing Factor Correction	0	0	0	0	0.0
Time Delay Correction	0	-2	0	-2	-0.1
Grand Total	1141	1027	200	2368	100.0

Engineering Checks

Cooling tons	0.20	Input Ventilation cfm	14
Cooling cfm	154.04	Calculated Ventilation cfm	23
ft²/ton	748.31	Number of People	1.00
cfm/ton	780.28	People per 1000 ft²	7
Conditioned ft²	147.7		

Conditions at Time of Heating Peak

Outside	DB / WB / HR	16.4 °F	/	12.6 °F	/	5.3 gr/lb
Room	DB / RH / HR	70.0 °F	/	4.9 %	/	5.2 gr/lb

	Instant Sensible (Btu/h)	Time Delay Sensible (Btu/h)	Latent (Btu/h)	Total (Btu/h)	Percent of Total (%)
Roof	0	0	0	0	0.0
Other Roof	0	0	0	0	0.0
Glass	0	0	0	0	0.0
Door	0	1	0	1	-1.0
Wall	0	0	0	0	0.0
Below-Grade Wall	0	0	0	0	0.0
Other Wall	0	0	0	0	0.0
Partition	0	3	0	3	-4.0
Exterior Floor	0	0	0	0	0.0
Interior Floor	0	0	0	0	0.0
Slab	0	0	0	0	-0.3
Other Floor	0	0	0	0	0.0
Infiltration	0	0	0	0	0.0
Envelope Subtotal	0	4	0	4	-
People	0	0	0	0	0.0
Lights	0	0	0	0	0.0
RA Sensible (Lights)	0	0	0	0	0.0
Miscellaneous Loads	0	0	0	0	0.0
Internal Subtotal	0	0	0	0	-
RA (All Other)	0	0	0	0	0.0
DOA Direct to Room	0	0	0	0	0.0
Ceiling	0	-79	0	-79	105.3
Refrigeration	0	0	0	0	0.0
Service Water	0	0	0	0	0.0
HVAC Equipment Losses	0	0	0	0	0.0
Adj Air Transfer Heat	0	0	0	0	0.0
Sizing Factor Correction	0	0	0	0	0.0
Time Delay Correction	0	0	0	0	0.0
Grand Total	0	-75	0	-75	100.0

Engineering Checks

Heating Mbh	-0.08	Input Ventilation cfm	14
Heating cfm	46.21	Calculated Ventilation cfm	13
ft²/Mbh	-1966.77	Number of People	1.00
cfm/Mbh	-615.36	People per 1000 ft²	7
Conditioned ft²	147.7		

ROOM_01_168_OFFICE_R01

Conditions at Time of Cooling Peak

Outside	DB / WB / HR	87.3 °F	/	72.9 °F	/	99.5 gr/lb
Room	DB / RH / HR	75.0 °F	/	50.9 %	/	65.8 gr/lb

	Instant Sensible (Btu/h)	Time Delay Sensible (Btu/h)	Latent (Btu/h)	Total (Btu/h)	Percent of Total (%)
Roof	0	0	0	0	0.0
Other Roof	0	0	0	0	0.0
Glass	0	0	0	0	0.0
Door	0	15	0	15	0.6
Wall	0	0	0	0	0.0
Below-Grade Wall	0	0	0	0	0.0
Other Wall	0	0	0	0	0.0
Partition	0	173	0	173	7.0
Exterior Floor	0	0	0	0	0.0
Interior Floor	0	0	0	0	0.0
Slab	0	9	0	9	0.4
Other Floor	0	0	0	0	0.0
Infiltration	0	0	0	0	0.0
Envelope Subtotal	0	197	0	197	-
People	105	115	200	420	17.0
Lights	155	233	0	387	15.7
RA Sensible (Lights)	178	0	0	178	7.2
Miscellaneous Loads	719	464	0	1183	47.8
Internal Subtotal	1156	812	200	2168	-
RA (All Other)	0	0	0	0	0.0
DOA Direct to Room	0	0	0	0	0.0
Ceiling	0	112	0	112	4.5
Refrigeration	0	0	0	0	0.0
Service Water	0	0	0	0	0.0
HVAC Equipment Losses	0	0	0	0	0.0
Adj Air Transfer Heat	0	0	0	0	0.0
Sizing Factor Correction	0	0	0	0	0.0
Time Delay Correction	0	-2	0	-2	-0.1
Grand Total	1156	1119	200	2475	100.0

Engineering Checks

Cooling tons	0.21	Input Ventilation cfm	14
Cooling cfm	156.37	Calculated Ventilation cfm	24
ft²/ton	733.34	Number of People	1.00
cfm/ton	758.02	People per 1000 ft²	7
Conditioned ft²	151.2		

Conditions at Time of Heating Peak

Outside	DB / WB / HR	16.4 °F	/	12.6 °F	/	5.3 gr/lb
Room	DB / RH / HR	70.0 °F	/	4.9 %	/	5.2 gr/lb

	Instant Sensible (Btu/h)	Time Delay Sensible (Btu/h)	Latent (Btu/h)	Total (Btu/h)	Percent of Total (%)
Roof	0	0	0	0	0.0
Other Roof	0	0	0	0	0.0
Glass	0	0	0	0	0.0
Door	0	-4	0	-4	4.4
Wall	0	0	0	0	0.0
Below-Grade Wall	0	0	0	0	0.0
Other Wall	0	0	0	0	0.0
Partition	0	13	0	13	-16.2
Exterior Floor	0	0	0	0	0.0
Interior Floor	0	0	0	0	0.0
Slab	0	-1	0	-1	0.9
Other Floor	0	0	0	0	0.0
Infiltration	0	0	0	0	0.0
Envelope Subtotal	0	9	0	9	-
People	0	0	0	0	0.0
Lights	0	0	0	0	0.0
RA Sensible (Lights)	0	0	0	0	0.0
Miscellaneous Loads	0	0	0	0	0.0
Internal Subtotal	0	0	0	0	-
RA (All Other)	0	0	0	0	0.0
DOA Direct to Room	0	0	0	0	0.0
Ceiling	0	-90	0	-90	110.9
Refrigeration	0	0	0	0	0.0
Service Water	0	0	0	0	0.0
HVAC Equipment Losses	0	0	0	0	0.0
Adj Air Transfer Heat	0	0	0	0	0.0
Sizing Factor Correction	0	0	0	0	0.0
Time Delay Correction	0	0	0	0	0.0
Grand Total	0	-81	0	-81	100.0

Engineering Checks

Heating Mbh	-0.08	Input Ventilation cfm	14
Heating cfm	46.91	Calculated Ventilation cfm	13
ft²/Mbh	-1862.12	Number of People	1.00
cfm/Mbh	-577.54	People per 1000 ft²	7
Conditioned ft²	151.2		

ROOM_01_169_OFFICE_R01

Conditions at Time of Cooling Peak

Outside	DB / WB / HR	86.4 °F	/	72.7 °F	/	99.5 gr/lb
Room	DB / RH / HR	75.0 °F	/	50.8 %	/	65.6 gr/lb

	Instant Sensible (Btu/h)	Time Delay Sensible (Btu/h)	Latent (Btu/h)	Total (Btu/h)	Percent of Total (%)
Roof	0	0	0	0	0.0
Other Roof	0	0	0	0	0.0
Glass	0	0	0	0	0.0
Door	0	10	0	10	0.4
Wall	0	0	0	0	0.0
Below-Grade Wall	0	0	0	0	0.0
Other Wall	0	0	0	0	0.0
Partition	0	226	0	226	8.6
Exterior Floor	0	0	0	0	0.0
Interior Floor	0	0	0	0	0.0
Slab	0	4	0	4	0.2
Other Floor	0	0	0	0	0.0
Infiltration	0	0	0	0	0.0
Envelope Subtotal	0	240	0	240	-
People	105	140	200	445	17.0
Lights	159	257	0	416	15.9
RA Sensible (Lights)	182	0	0	182	7.0
Miscellaneous Loads	727	505	0	1232	47.1
Internal Subtotal	1173	902	200	2276	-
RA (All Other)	0	0	0	0	0.0
DOA Direct to Room	0	0	0	0	0.0
Ceiling	0	104	0	104	4.0
Refrigeration	0	0	0	0	0.0
Service Water	0	0	0	0	0.0
HVAC Equipment Losses	0	0	0	0	0.0
Adj Air Transfer Heat	0	0	0	0	0.0
Sizing Factor Correction	0	0	0	0	0.0
Time Delay Correction	0	-2	0	-2	-0.1
Grand Total	1173	1245	200	2618	100.0

Engineering Checks

Cooling tons	0.22	Input Ventilation cfm	14
Cooling cfm	159.08	Calculated Ventilation cfm	24
ft²/ton	712.04	Number of People	1.00
cfm/ton	729.04	People per 1000 ft²	6
Conditioned ft²	155.3		

Conditions at Time of Heating Peak

Outside	DB / WB / HR	32.0 °F	/	32.0 °F	/	0.0 gr/lb
Room	DB / RH / HR	32.0 °F	/	0.0 %	/	0.0 gr/lb

	Instant Sensible (Btu/h)	Time Delay Sensible (Btu/h)	Latent (Btu/h)	Total (Btu/h)	Percent of Total (%)
Roof	0	0	0	0	0.0
Other Roof	0	0	0	0	0.0
Glass	0	0	0	0	0.0
Door	0	0	0	0	0.0
Wall	0	0	0	0	0.0
Below-Grade Wall	0	0	0	0	0.0
Other Wall	0	0	0	0	0.0
Partition	0	0	0	0	0.0
Exterior Floor	0	0	0	0	0.0
Interior Floor	0	0	0	0	0.0
Slab	0	0	0	0	0.0
Other Floor	0	0	0	0	0.0
Infiltration	0	0	0	0	0.0
Envelope Subtotal	0	0	0	0	-
People	0	0	0	0	0.0
Lights	0	0	0	0	0.0
RA Sensible (Lights)	0	0	0	0	0.0
Miscellaneous Loads	0	0	0	0	0.0
Internal Subtotal	0	0	0	0	-
RA (All Other)	0	0	0	0	0.0
DOA Direct to Room	0	0	0	0	0.0
Ceiling	0	0	0	0	0.0
Refrigeration	0	0	0	0	0.0
Service Water	0	0	0	0	0.0
HVAC Equipment Losses	0	0	0	0	0.0
Adj Air Transfer Heat	0	0	0	0	0.0
Sizing Factor Correction	0	0	0	0	0.0
Time Delay Correction	0	0	0	0	0.0
Grand Total	0	0	0	0	100.0

Engineering Checks

Heating Mbh	0.00	Input Ventilation cfm	14
Heating cfm	47.72	Calculated Ventilation cfm	13
ft²/Mbh	0.00	Number of People	1.00
cfm/Mbh	0.00	People per 1000 ft²	6
Conditioned ft²	155.3		

ROOM_01_170_ELEC_R01

Conditions at Time of Cooling Peak

Outside	DB / WB / HR	88.0 °F	/	73.1 °F	/	99.5 gr/lb
Room	DB / RH / HR	81.0 °F	/	39.9 %	/	62.8 gr/lb

	Instant Sensible (Btu/h)	Time Delay Sensible (Btu/h)	Latent (Btu/h)	Total (Btu/h)	Percent of Total (%)
Roof	0	0	0	0	0.0
Other Roof	0	0	0	0	0.0
Glass	0	0	0	0	0.0
Door	0	-24	0	-24	-0.7
Wall	0	0	0	0	0.0
Below-Grade Wall	0	0	0	0	0.0
Other Wall	0	0	0	0	0.0
Partition	0	-699	0	-699	-20.9
Exterior Floor	0	0	0	0	0.0
Interior Floor	0	0	0	0	0.0
Slab	0	42	0	42	1.2
Other Floor	0	0	0	0	0.0
Infiltration	0	0	0	0	0.0
Envelope Subtotal	0	-681	0	-681	-
People	0	0	0	0	0.0
Lights	42	67	0	108	3.2
RA Sensible (Lights)	48	0	0	48	1.4
Miscellaneous Loads	2366	1621	0	3987	119.0
Internal Subtotal	2455	1688	0	4143	-
RA (All Other)	0	0	0	0	0.0
DOA Direct to Room	0	0	0	0	0.0
Ceiling	0	-111	0	-111	-3.3
Refrigeration	0	0	0	0	0.0
Service Water	0	0	0	0	0.0
HVAC Equipment Losses	0	0	0	0	0.0
Adj Air Transfer Heat	0	0	0	0	0.0
Sizing Factor Correction	0	0	0	0	0.0
Time Delay Correction	0	0	0	0	0.0
Grand Total	2455	895	0	3350	100.0

Engineering Checks

Cooling tons	0.28	Input Ventilation cfm	116
Cooling cfm	116.21	Calculated Ventilation cfm	0
ft²/ton	386.35	Number of People	0.00
cfm/ton	416.17	People per 1000 ft²	0
Conditioned ft²	107.9		

Conditions at Time of Heating Peak

Outside	DB / WB / HR	32.0 °F	/	32.0 °F	/	0.0 gr/lb
Room	DB / RH / HR	32.0 °F	/	0.0 %	/	0.0 gr/lb

	Instant Sensible (Btu/h)	Time Delay Sensible (Btu/h)	Latent (Btu/h)	Total (Btu/h)	Percent of Total (%)
Roof	0	0	0	0	0.0
Other Roof	0	0	0	0	0.0
Glass	0	0	0	0	0.0
Door	0	0	0	0	0.0
Wall	0	0	0	0	0.0
Below-Grade Wall	0	0	0	0	0.0
Other Wall	0	0	0	0	0.0
Partition	0	0	0	0	0.0
Exterior Floor	0	0	0	0	0.0
Interior Floor	0	0	0	0	0.0
Slab	0	0	0	0	0.0
Other Floor	0	0	0	0	0.0
Infiltration	0	0	0	0	0.0
Envelope Subtotal	0	0	0	0	-
People	0	0	0	0	0.0
Lights	0	0	0	0	0.0
RA Sensible (Lights)	0	0	0	0	0.0
Miscellaneous Loads	0	0	0	0	0.0
Internal Subtotal	0	0	0	0	-
RA (All Other)	0	0	0	0	0.0
DOA Direct to Room	0	0	0	0	0.0
Ceiling	0	0	0	0	0.0
Refrigeration	0	0	0	0	0.0
Service Water	0	0	0	0	0.0
HVAC Equipment Losses	0	0	0	0	0.0
Adj Air Transfer Heat	0	0	0	0	0.0
Sizing Factor Correction	0	0	0	0	0.0
Time Delay Correction	0	0	0	0	0.0
Grand Total	0	0	0	0	100.0

Engineering Checks

Heating Mbh	0.00	Input Ventilation cfm	116
Heating cfm	116.21	Calculated Ventilation cfm	0
ft²/Mbh	0.00	Number of People	0.00
cfm/Mbh	0.00	People per 1000 ft²	0
Conditioned ft²	107.9		

ROOM_01_170A_CORR_R01

Conditions at Time of Cooling Peak

Outside	DB / WB / HR	83.8 °F	/	71.9 °F	/	99.4 gr/lb
Room	DB / RH / HR	81.0 °F	/	39.9 %	/	62.8 gr/lb

	Instant Sensible (Btu/h)	Time Delay Sensible (Btu/h)	Latent (Btu/h)	Total (Btu/h)	Percent of Total (%)
Roof	0	0	0	0	0.0
Other Roof	0	0	0	0	0.0
Glass	-107	105	0	-2	-0.2
Door	0	34	0	34	3.4
Wall	0	0	0	0	0.0
Below-Grade Wall	0	0	0	0	0.0
Other Wall	0	0	0	0	0.0
Partition	0	577	0	577	58.6
Exterior Floor	0	0	0	0	0.0
Interior Floor	0	0	0	0	0.0
Slab	0	-221	0	-221	-22.5
Other Floor	0	0	0	0	0.0
Infiltration	0	0	0	0	0.0
Envelope Subtotal	-107	495	0	388	-
People	0	0	0	0	0.0
Lights	157	169	0	326	33.1
RA Sensible (Lights)	180	0	0	180	18.3
Miscellaneous Loads	0	0	0	0	0.0
Internal Subtotal	336	169	0	505	-
RA (All Other)	0	0	0	0	0.0
DOA Direct to Room	0	0	0	0	0.0
Ceiling	0	98	0	98	10.0
Refrigeration	0	0	0	0	0.0
Service Water	0	0	0	0	0.0
HVAC Equipment Losses	0	0	0	0	0.0
Adj Air Transfer Heat	0	0	0	0	0.0
Sizing Factor Correction	0	0	0	0	0.0
Time Delay Correction	0	-8	0	-8	-0.8
Grand Total	229	755	0	984	100.0

Engineering Checks

Cooling tons	0.08	Input Ventilation cfm	15
Cooling cfm	171.67	Calculated Ventilation cfm	26
ft²/ton	3139.32	Number of People	0.00
cfm/ton	2,092.58	People per 1000 ft²	0
Conditioned ft²	257.5		

Conditions at Time of Heating Peak

Outside	DB / WB / HR	16.4 °F	/	12.6 °F	/	5.3 gr/lb
Room	DB / RH / HR	70.0 °F	/	4.9 %	/	5.2 gr/lb

	Instant Sensible (Btu/h)	Time Delay Sensible (Btu/h)	Latent (Btu/h)	Total (Btu/h)	Percent of Total (%)
Roof	0	0	0	0	0.0
Other Roof	0	0	0	0	0.0
Glass	-216	0	0	-216	52.7
Door	0	68	0	68	-16.6
Wall	0	0	0	0	0.0
Below-Grade Wall	0	0	0	0	0.0
Other Wall	0	0	0	0	0.0
Partition	0	-100	0	-100	24.3
Exterior Floor	0	0	0	0	0.0
Interior Floor	0	0	0	0	0.0
Slab	0	-3	0	-3	0.7
Other Floor	0	0	0	0	0.0
Infiltration	0	0	0	0	0.0
Envelope Subtotal	-216	-34	0	-250	-
People	0	0	0	0	0.0
Lights	0	0	0	0	0.0
RA Sensible (Lights)	0	0	0	0	0.0
Miscellaneous Loads	0	0	0	0	0.0
Internal Subtotal	0	0	0	0	-
RA (All Other)	0	0	0	0	0.0
DOA Direct to Room	0	0	0	0	0.0
Ceiling	0	-159	0	-159	38.9
Refrigeration	0	0	0	0	0.0
Service Water	0	0	0	0	0.0
HVAC Equipment Losses	0	0	0	0	0.0
Adj Air Transfer Heat	0	0	0	0	0.0
Sizing Factor Correction	0	0	0	0	0.0
Time Delay Correction	0	0	0	0	0.0
Grand Total	-216	-194	0	-410	100.0

Engineering Checks

Heating Mbh	-0.41	Input Ventilation cfm	15
Heating cfm	51.50	Calculated Ventilation cfm	15
ft²/Mbh	-628.73	Number of People	0.00
cfm/Mbh	-125.75	People per 1000 ft²	0
Conditioned ft²	257.5		

ROOM_01_171_TELECOM

Conditions at Time of Cooling Peak

Outside	DB / WB / HR	88.0 °F	/	73.1 °F	/	99.5 gr/lb
Room	DB / RH / HR	81.0 °F	/	39.9 %	/	62.8 gr/lb

	Instant Sensible (Btu/h)	Time Delay Sensible (Btu/h)	Latent (Btu/h)	Total (Btu/h)	Percent of Total (%)
Roof	0	0	0	0	0.0
Other Roof	0	0	0	0	0.0
Glass	0	0	0	0	0.0
Door	0	3	0	3	0.9
Wall	0	0	0	0	0.0
Below-Grade Wall	0	0	0	0	0.0
Other Wall	0	0	0	0	0.0
Partition	0	21	0	21	5.7
Exterior Floor	0	0	0	0	0.0
Interior Floor	0	0	0	0	0.0
Slab	0	0	0	0	0.1
Other Floor	0	0	0	0	0.0
Infiltration	0	0	0	0	0.0
Envelope Subtotal	0	24	0	24	-
People	0	0	0	0	0.0
Lights	40	48	0	88	24.5
RA Sensible (Lights)	46	0	0	46	12.9
Miscellaneous Loads	135	68	0	203	56.3
Internal Subtotal	222	116	0	338	-
RA (All Other)	0	0	0	0	0.0
DOA Direct to Room	0	0	0	0	0.0
Ceiling	0	-1	0	-1	-0.2
Refrigeration	0	0	0	0	0.0
Service Water	0	0	0	0	0.0
HVAC Equipment Losses	0	0	0	0	0.0
Adj Air Transfer Heat	0	0	0	0	0.0
Sizing Factor Correction	0	0	0	0	0.0
Time Delay Correction	0	0	0	0	0.0
Grand Total	222	139	0	361	100.0

Engineering Checks

Cooling tons	0.03	Input Ventilation cfm	11
Cooling cfm	11.08	Calculated Ventilation cfm	0
ft²/ton	3473.95	Number of People	0.00
cfm/ton	367.92	People per 1000 ft²	0
Conditioned ft²	104.6		

Conditions at Time of Heating Peak

Outside	DB / WB / HR	32.0 °F	/	32.0 °F	/	0.0 gr/lb
Room	DB / RH / HR	32.0 °F	/	0.0 %	/	0.0 gr/lb

	Instant Sensible (Btu/h)	Time Delay Sensible (Btu/h)	Latent (Btu/h)	Total (Btu/h)	Percent of Total (%)
Roof	0	0	0	0	0.0
Other Roof	0	0	0	0	0.0
Glass	0	0	0	0	0.0
Door	0	0	0	0	0.0
Wall	0	0	0	0	0.0
Below-Grade Wall	0	0	0	0	0.0
Other Wall	0	0	0	0	0.0
Partition	0	0	0	0	0.0
Exterior Floor	0	0	0	0	0.0
Interior Floor	0	0	0	0	0.0
Slab	0	0	0	0	0.0
Other Floor	0	0	0	0	0.0
Infiltration	0	0	0	0	0.0
Envelope Subtotal	0	0	0	0	-
People	0	0	0	0	0.0
Lights	0	0	0	0	0.0
RA Sensible (Lights)	0	0	0	0	0.0
Miscellaneous Loads	0	0	0	0	0.0
Internal Subtotal	0	0	0	0	-
RA (All Other)	0	0	0	0	0.0
DOA Direct to Room	0	0	0	0	0.0
Ceiling	0	0	0	0	0.0
Refrigeration	0	0	0	0	0.0
Service Water	0	0	0	0	0.0
HVAC Equipment Losses	0	0	0	0	0.0
Adj Air Transfer Heat	0	0	0	0	0.0
Sizing Factor Correction	0	0	0	0	0.0
Time Delay Correction	0	0	0	0	0.0
Grand Total	0	0	0	0	100.0

Engineering Checks

Heating Mbh	0.00	Input Ventilation cfm	11
Heating cfm	11.08	Calculated Ventilation cfm	0
ft²/Mbh	0.00	Number of People	0.00
cfm/Mbh	0.00	People per 1000 ft²	0
Conditioned ft²	104.6		

ROOM_01_172_OFFICE_R01

Conditions at Time of Cooling Peak

Outside	DB / WB / HR	87.5 °F	/	72.5 °F	/	96.6 gr/lb
Room	DB / RH / HR	75.0 °F	/	50.9 %	/	65.9 gr/lb

	Instant Sensible (Btu/h)	Time Delay Sensible (Btu/h)	Latent (Btu/h)	Total (Btu/h)	Percent of Total (%)
Roof	0	0	0	0	0.0
Other Roof	0	0	0	0	0.0
Glass	0	0	0	0	0.0
Door	0	16	0	16	0.6
Wall	0	0	0	0	0.0
Below-Grade Wall	0	0	0	0	0.0
Other Wall	0	0	0	0	0.0
Partition	0	334	0	334	13.7
Exterior Floor	0	0	0	0	0.0
Interior Floor	0	0	0	0	0.0
Slab	0	19	0	19	0.8
Other Floor	0	0	0	0	0.0
Infiltration	0	0	0	0	0.0
Envelope Subtotal	0	368	0	368	-
People	105	101	200	406	16.7
Lights	144	191	0	335	13.8
RA Sensible (Lights)	165	0	0	165	6.8
Miscellaneous Loads	698	396	0	1094	45.0
Internal Subtotal	1113	688	200	2000	-
RA (All Other)	0	0	0	0	0.0
DOA Direct to Room	0	0	0	0	0.0
Ceiling	0	65	0	65	2.7
Refrigeration	0	0	0	0	0.0
Service Water	0	0	0	0	0.0
HVAC Equipment Losses	0	0	0	0	0.0
Adj Air Transfer Heat	0	0	0	0	0.0
Sizing Factor Correction	0	0	0	0	0.0
Time Delay Correction	0	-2	0	-2	-0.1
Grand Total	1113	1120	200	2432	100.0

Engineering Checks

Cooling tons	0.20	Input Ventilation cfm	13
Cooling cfm	149.52	Calculated Ventilation cfm	23
ft²/ton	695.25	Number of People	1.00
cfm/ton	737.56	People per 1000 ft²	7
Conditioned ft²	140.9		

Conditions at Time of Heating Peak

Outside	DB / WB / HR	16.4 °F	/	12.6 °F	/	5.3 gr/lb
Room	DB / RH / HR	70.0 °F	/	4.9 %	/	5.2 gr/lb

	Instant Sensible (Btu/h)	Time Delay Sensible (Btu/h)	Latent (Btu/h)	Total (Btu/h)	Percent of Total (%)
Roof	0	0	0	0	0.0
Other Roof	0	0	0	0	0.0
Glass	0	0	0	0	0.0
Door	0	-5	0	-5	18.2
Wall	0	0	0	0	0.0
Below-Grade Wall	0	0	0	0	0.0
Other Wall	0	0	0	0	0.0
Partition	0	27	0	27	-97.5
Exterior Floor	0	0	0	0	0.0
Interior Floor	0	0	0	0	0.0
Slab	0	0	0	0	-0.2
Other Floor	0	0	0	0	0.0
Infiltration	0	0	0	0	0.0
Envelope Subtotal	0	22	0	22	-
People	0	0	0	0	0.0
Lights	0	0	0	0	0.0
RA Sensible (Lights)	0	0	0	0	0.0
Miscellaneous Loads	0	0	0	0	0.0
Internal Subtotal	0	0	0	0	-
RA (All Other)	0	0	0	0	0.0
DOA Direct to Room	0	0	0	0	0.0
Ceiling	0	-49	0	-49	179.4
Refrigeration	0	0	0	0	0.0
Service Water	0	0	0	0	0.0
HVAC Equipment Losses	0	0	0	0	0.0
Adj Air Transfer Heat	0	0	0	0	0.0
Sizing Factor Correction	0	0	0	0	0.0
Time Delay Correction	0	0	0	0	0.0
Grand Total	0	-27	0	-27	100.0

Engineering Checks

Heating Mbh	-0.03	Input Ventilation cfm	13
Heating cfm	44.85	Calculated Ventilation cfm	13
ft²/Mbh	-5184.41	Number of People	1.00
cfm/Mbh	-1,650.27	People per 1000 ft²	7
Conditioned ft²	140.9		

ROOM_01_173_OFFICE_R01

Conditions at Time of Cooling Peak

Outside	DB / WB / HR	83.8 °F	/	71.9 °F	/	99.4 gr/lb
Room	DB / RH / HR	75.0 °F	/	50.5 %	/	65.2 gr/lb

	Instant Sensible (Btu/h)	Time Delay Sensible (Btu/h)	Latent (Btu/h)	Total (Btu/h)	Percent of Total (%)
Roof	0	0	0	0	0.0
Other Roof	0	0	0	0	0.0
Glass	0	0	0	0	0.0
Door	0	13	0	13	0.6
Wall	0	501	0	501	23.4
Below-Grade Wall	0	0	0	0	0.0
Other Wall	0	0	0	0	0.0
Partition	0	312	0	312	14.6
Exterior Floor	0	0	0	0	0.0
Interior Floor	0	0	0	0	0.0
Slab	0	-126	0	-126	-5.9
Other Floor	0	0	0	0	0.0
Infiltration	0	0	0	0	0.0
Envelope Subtotal	0	700	0	700	-
People	74	78	140	292	13.6
Lights	144	210	0	354	16.6
RA Sensible (Lights)	165	0	0	165	7.7
Miscellaneous Loads	288	181	0	468	21.9
Internal Subtotal	670	469	140	1279	-
RA (All Other)	0	0	0	0	0.0
DOA Direct to Room	0	0	0	0	0.0
Ceiling	0	162	0	162	7.6
Refrigeration	0	0	0	0	0.0
Service Water	0	0	0	0	0.0
HVAC Equipment Losses	0	0	0	0	0.0
Adj Air Transfer Heat	0	0	0	0	0.0
Sizing Factor Correction	0	0	0	0	0.0
Time Delay Correction	0	-1	0	-1	-0.1
Grand Total	670	1329	140	2140	100.0

Engineering Checks

Cooling tons	0.18	Input Ventilation cfm	12
Cooling cfm	132.69	Calculated Ventilation cfm	20
ft²/ton	787.77	Number of People	0.70
cfm/ton	743.96	People per 1000 ft²	5
Conditioned ft²	140.5		

Conditions at Time of Heating Peak

Outside	DB / WB / HR	16.4 °F	/	12.6 °F	/	5.3 gr/lb
Room	DB / RH / HR	70.0 °F	/	4.9 %	/	5.2 gr/lb

	Instant Sensible (Btu/h)	Time Delay Sensible (Btu/h)	Latent (Btu/h)	Total (Btu/h)	Percent of Total (%)
Roof	0	0	0	0	0.0
Other Roof	0	0	0	0	0.0
Glass	0	0	0	0	0.0
Door	0	9	0	9	-1.3
Wall	0	-444	0	-444	66.5
Below-Grade Wall	0	0	0	0	0.0
Other Wall	0	0	0	0	0.0
Partition	0	-45	0	-45	6.7
Exterior Floor	0	0	0	0	0.0
Interior Floor	0	0	0	0	0.0
Slab	0	-2	0	-2	0.3
Other Floor	0	0	0	0	0.0
Infiltration	0	0	0	0	0.0
Envelope Subtotal	0	-482	0	-482	-
People	0	0	0	0	0.0
Lights	0	0	0	0	0.0
RA Sensible (Lights)	0	0	0	0	0.0
Miscellaneous Loads	0	0	0	0	0.0
Internal Subtotal	0	0	0	0	-
RA (All Other)	0	0	0	0	0.0
DOA Direct to Room	0	0	0	0	0.0
Ceiling	0	-186	0	-186	27.9
Refrigeration	0	0	0	0	0.0
Service Water	0	0	0	0	0.0
HVAC Equipment Losses	0	0	0	0	0.0
Adj Air Transfer Heat	0	0	0	0	0.0
Sizing Factor Correction	0	0	0	0	0.0
Time Delay Correction	0	0	0	0	0.0
Grand Total	0	-668	0	-668	100.0

Engineering Checks

Heating Mbh	-0.67	Input Ventilation cfm	12
Heating cfm	39.81	Calculated Ventilation cfm	11
ft²/Mbh	-210.27	Number of People	0.70
cfm/Mbh	-59.58	People per 1000 ft²	5
Conditioned ft²	140.5		

ROOM_01_174_PRINT_R01

Conditions at Time of Cooling Peak

Outside	DB / WB / HR	82.8 °F	/	71.6 °F	/	99.4 gr/lb
Room	DB / RH / HR	75.0 °F	/	49.9 %	/	64.5 gr/lb

	Instant Sensible (Btu/h)	Time Delay Sensible (Btu/h)	Latent (Btu/h)	Total (Btu/h)	Percent of Total (%)
Roof	0	0	0	0	0.0
Other Roof	0	0	0	0	0.0
Glass	108	44	0	152	10.8
Door	0	0	0	0	0.0
Wall	0	256	0	256	18.2
Below-Grade Wall	0	0	0	0	0.0
Other Wall	0	0	0	0	0.0
Partition	0	424	0	424	30.1
Exterior Floor	0	0	0	0	0.0
Interior Floor	0	0	0	0	0.0
Slab	0	-101	0	-101	-7.2
Other Floor	0	0	0	0	0.0
Infiltration	0	0	0	0	0.0
Envelope Subtotal	108	623	0	731	-
People	36	42	68	146	10.4
Lights	62	91	0	153	10.9
RA Sensible (Lights)	71	0	0	71	5.0
Miscellaneous Loads	140	97	0	236	16.8
Internal Subtotal	308	230	68	606	-
RA (All Other)	0	0	0	0	0.0
DOA Direct to Room	0	0	0	0	0.0
Ceiling	0	98	0	98	7.0
Refrigeration	0	0	0	0	0.0
Service Water	0	0	0	0	0.0
HVAC Equipment Losses	0	0	0	0	0.0
Adj Air Transfer Heat	0	0	0	0	0.0
Sizing Factor Correction	0	0	0	0	0.0
Time Delay Correction	0	-29	0	-29	-2.1
Grand Total	416	922	68	1406	100.0

Engineering Checks

Cooling tons	0.12	Input Ventilation cfm	6
Cooling cfm	64.41	Calculated Ventilation cfm	10
ft²/ton	582.48	Number of People	0.34
cfm/ton	549.62	People per 1000 ft²	5
Conditioned ft²	68.2		

Conditions at Time of Heating Peak

Outside	DB / WB / HR	16.4 °F	/	12.6 °F	/	5.3 gr/lb
Room	DB / RH / HR	70.0 °F	/	4.9 %	/	5.2 gr/lb

	Instant Sensible (Btu/h)	Time Delay Sensible (Btu/h)	Latent (Btu/h)	Total (Btu/h)	Percent of Total (%)
Roof	0	0	0	0	0.0
Other Roof	0	0	0	0	0.0
Glass	78	0	0	78	-19.4
Door	0	0	0	0	0.0
Wall	0	-226	0	-226	56.4
Below-Grade Wall	0	0	0	0	0.0
Other Wall	0	0	0	0	0.0
Partition	0	-153	0	-153	38.3
Exterior Floor	0	0	0	0	0.0
Interior Floor	0	0	0	0	0.0
Slab	0	-1	0	-1	0.2
Other Floor	0	0	0	0	0.0
Infiltration	0	0	0	0	0.0
Envelope Subtotal	78	-380	0	-302	-
People	0	0	0	0	0.0
Lights	0	0	0	0	0.0
RA Sensible (Lights)	0	0	0	0	0.0
Miscellaneous Loads	0	0	0	0	0.0
Internal Subtotal	0	0	0	0	-
RA (All Other)	0	0	0	0	0.0
DOA Direct to Room	0	0	0	0	0.0
Ceiling	0	-98	0	-98	24.6
Refrigeration	0	0	0	0	0.0
Service Water	0	0	0	0	0.0
HVAC Equipment Losses	0	0	0	0	0.0
Adj Air Transfer Heat	0	0	0	0	0.0
Sizing Factor Correction	0	0	0	0	0.0
Time Delay Correction	0	0	0	0	0.0
Grand Total	78	-478	0	-400	100.0

Engineering Checks

Heating Mbh	-0.40	Input Ventilation cfm	6
Heating cfm	19.32	Calculated Ventilation cfm	5
ft²/Mbh	-170.49	Number of People	0.34
cfm/Mbh	-48.27	People per 1000 ft²	5
Conditioned ft²	68.2		

ROOM_01_COMM STAIR A_R02

Conditions at Time of Cooling Peak

Outside	DB / WB / HR	83.6 °F	/	71.9 °F	/	99.4 gr/lb
Room	DB / RH / HR	81.0 °F	/	39.9 %	/	62.8 gr/lb

	Instant Sensible (Btu/h)	Time Delay Sensible (Btu/h)	Latent (Btu/h)	Total (Btu/h)	Percent of Total (%)
Roof	0	0	0	0	0.0
Other Roof	0	0	0	0	0.0
Glass	-171	180	0	9	2.2
Door	0	0	0	0	0.0
Wall	0	0	0	0	0.0
Below-Grade Wall	0	0	0	0	0.0
Other Wall	0	0	0	0	0.0
Partition	0	-24	0	-24	-6.0
Exterior Floor	0	0	0	0	0.0
Interior Floor	0	0	0	0	0.0
Slab	0	-31	0	-31	-7.8
Other Floor	0	0	0	0	0.0
Infiltration	0	0	0	0	0.0
Envelope Subtotal	-171	125	0	-46	-
People	0	0	0	0	0.0
Lights	121	162	0	283	72.0
RA Sensible (Lights)	139	0	0	139	35.3
Miscellaneous Loads	0	0	0	0	0.0
Internal Subtotal	259	162	0	422	-
RA (All Other)	0	0	0	0	0.0
DOA Direct to Room	0	0	0	0	0.0
Ceiling	0	44	0	44	11.3
Refrigeration	0	0	0	0	0.0
Service Water	0	0	0	0	0.0
HVAC Equipment Losses	0	0	0	0	0.0
Adj Air Transfer Heat	0	0	0	0	0.0
Sizing Factor Correction	0	0	0	0	0.0
Time Delay Correction	0	-27	0	-27	-6.9
Grand Total	88	305	0	393	100.0

Engineering Checks

Cooling tons	0.03	Input Ventilation cfm	0
Cooling cfm	27.30	Calculated Ventilation cfm	6
ft²/ton	5800.47	Number of People	0.00
cfm/ton	833.19	People per 1000 ft²	0
Conditioned ft²	190.0		

Conditions at Time of Heating Peak

Outside	DB / WB / HR	16.4 °F	/	12.6 °F	/	5.3 gr/lb
Room	DB / RH / HR	70.0 °F	/	4.9 %	/	5.2 gr/lb

	Instant Sensible (Btu/h)	Time Delay Sensible (Btu/h)	Latent (Btu/h)	Total (Btu/h)	Percent of Total (%)
Roof	0	0	0	0	0.0
Other Roof	0	0	0	0	0.0
Glass	-406	0	0	-406	184.1
Door	0	0	0	0	0.0
Wall	0	0	0	0	0.0
Below-Grade Wall	0	0	0	0	0.0
Other Wall	0	0	0	0	0.0
Partition	0	252	0	252	-114.1
Exterior Floor	0	0	0	0	0.0
Interior Floor	0	0	0	0	0.0
Slab	0	-2	0	-2	0.8
Other Floor	0	0	0	0	0.0
Infiltration	0	0	0	0	0.0
Envelope Subtotal	-406	250	0	-156	-
People	0	0	0	0	0.0
Lights	0	0	0	0	0.0
RA Sensible (Lights)	0	0	0	0	0.0
Miscellaneous Loads	0	0	0	0	0.0
Internal Subtotal	0	0	0	0	-
RA (All Other)	0	0	0	0	0.0
DOA Direct to Room	0	0	0	0	0.0
Ceiling	0	-64	0	-64	29.2
Refrigeration	0	0	0	0	0.0
Service Water	0	0	0	0	0.0
HVAC Equipment Losses	0	0	0	0	0.0
Adj Air Transfer Heat	0	0	0	0	0.0
Sizing Factor Correction	0	0	0	0	0.0
Time Delay Correction	0	0	0	0	0.0
Grand Total	-406	185	0	-220	100.0

Engineering Checks

Heating Mbh	-0.22	Input Ventilation cfm	0
Heating cfm	8.19	Calculated Ventilation cfm	2
ft²/Mbh	-862.06	Number of People	0.00
cfm/Mbh	-37.16	People per 1000 ft²	0
Conditioned ft²	190.0		

ROOM_01_COMM STAIR B_R02

Conditions at Time of Cooling Peak

Outside	DB / WB / HR	83.6 °F	/	71.9 °F	/	99.4 gr/lb
Room	DB / RH / HR	81.0 °F	/	39.9 %	/	62.8 gr/lb

	Instant Sensible (Btu/h)	Time Delay Sensible (Btu/h)	Latent (Btu/h)	Total (Btu/h)	Percent of Total (%)
Roof	0	0	0	0	0.0
Other Roof	0	0	0	0	0.0
Glass	-183	119	0	-64	-17.9
Door	0	0	0	0	0.0
Wall	0	0	0	0	0.0
Below-Grade Wall	0	0	0	0	0.0
Other Wall	0	0	0	0	0.0
Partition	0	21	0	21	5.8
Exterior Floor	0	0	0	0	0.0
Interior Floor	0	0	0	0	0.0
Slab	0	-25	0	-25	-6.9
Other Floor	0	0	0	0	0.0
Infiltration	0	0	0	0	0.0
Envelope Subtotal	-183	115	0	-68	-
People	0	0	0	0	0.0
Lights	128	124	0	252	70.4
RA Sensible (Lights)	147	0	0	147	41.0
Miscellaneous Loads	0	0	0	0	0.0
Internal Subtotal	274	124	0	399	-
RA (All Other)	0	0	0	0	0.0
DOA Direct to Room	0	0	0	0	0.0
Ceiling	0	50	0	50	14.1
Refrigeration	0	0	0	0	0.0
Service Water	0	0	0	0	0.0
HVAC Equipment Losses	0	0	0	0	0.0
Adj Air Transfer Heat	0	0	0	0	0.0
Sizing Factor Correction	0	0	0	0	0.0
Time Delay Correction	0	-23	0	-23	-6.5
Grand Total	92	266	0	358	100.0

Engineering Checks

Cooling tons	0.03	Input Ventilation cfm	0
Cooling cfm	43.95	Calculated Ventilation cfm	9
ft²/ton	6737.23	Number of People	0.00
cfm/ton	1,473.13	People per 1000 ft²	0
Conditioned ft²	201.0		

Conditions at Time of Heating Peak

Outside	DB / WB / HR	16.4 °F	/	12.6 °F	/	5.3 gr/lb
Room	DB / RH / HR	70.0 °F	/	4.9 %	/	5.2 gr/lb

	Instant Sensible (Btu/h)	Time Delay Sensible (Btu/h)	Latent (Btu/h)	Total (Btu/h)	Percent of Total (%)
Roof	0	0	0	0	0.0
Other Roof	0	0	0	0	0.0
Glass	-281	0	0	-281	79.1
Door	0	0	0	0	0.0
Wall	0	0	0	0	0.0
Below-Grade Wall	0	0	0	0	0.0
Other Wall	0	0	0	0	0.0
Partition	0	-26	0	-26	7.3
Exterior Floor	0	0	0	0	0.0
Interior Floor	0	0	0	0	0.0
Slab	0	-2	0	-2	0.6
Other Floor	0	0	0	0	0.0
Infiltration	0	0	0	0	0.0
Envelope Subtotal	-281	-28	0	-308	-
People	0	0	0	0	0.0
Lights	0	0	0	0	0.0
RA Sensible (Lights)	0	0	0	0	0.0
Miscellaneous Loads	0	0	0	0	0.0
Internal Subtotal	0	0	0	0	-
RA (All Other)	0	0	0	0	0.0
DOA Direct to Room	0	0	0	0	0.0
Ceiling	0	-46	0	-46	13.1
Refrigeration	0	0	0	0	0.0
Service Water	0	0	0	0	0.0
HVAC Equipment Losses	0	0	0	0	0.0
Adj Air Transfer Heat	0	0	0	0	0.0
Sizing Factor Correction	0	0	0	0	0.0
Time Delay Correction	0	0	0	0	0.0
Grand Total	-281	-74	0	-355	100.0

Engineering Checks

Heating Mbh	-0.35	Input Ventilation cfm	0
Heating cfm	13.19	Calculated Ventilation cfm	4
ft²/Mbh	-566.31	Number of People	0.00
cfm/Mbh	-37.15	People per 1000 ft²	0
Conditioned ft²	201.0		

ROOM_01_STAIR 1

Conditions at Time of Cooling Peak

Outside	DB / WB / HR	87.8 °F	/	73.1 °F	/	99.5 gr/lb
Room	DB / RH / HR	81.0 °F	/	39.9 %	/	62.8 gr/lb

	Instant Sensible (Btu/h)	Time Delay Sensible (Btu/h)	Latent (Btu/h)	Total (Btu/h)	Percent of Total (%)
Roof	0	0	0	0	0.0
Other Roof	0	0	0	0	0.0
Glass	6833	9351	0	16184	125.1
Door	0	-60	0	-60	-0.5
Wall	0	106	0	106	0.8
Below-Grade Wall	0	0	0	0	0.0
Other Wall	0	0	0	0	0.0
Partition	0	-2541	0	-2541	-19.6
Exterior Floor	0	0	0	0	0.0
Interior Floor	0	0	0	0	0.0
Slab	0	7	0	7	0.1
Other Floor	0	0	0	0	0.0
Infiltration	0	0	0	0	0.0
Envelope Subtotal	6833	6862	0	13695	-
People	0	0	0	0	0.0
Lights	144	216	0	360	2.8
RA Sensible (Lights)	165	0	0	165	1.3
Miscellaneous Loads	0	0	0	0	0.0
Internal Subtotal	309	216	0	525	-
RA (All Other)	0	0	0	0	0.0
DOA Direct to Room	0	0	0	0	0.0
Ceiling	0	-1272	0	-1272	-9.8
Refrigeration	0	0	0	0	0.0
Service Water	0	0	0	0	0.0
HVAC Equipment Losses	0	0	0	0	0.0
Adj Air Transfer Heat	0	0	0	0	0.0
Sizing Factor Correction	0	0	0	0	0.0
Time Delay Correction	0	-13	0	-13	-0.1
Grand Total	7142	5793	0	12935	100.0

Engineering Checks

Cooling tons	1.08	Input Ventilation cfm	449
Cooling cfm	449.38	Calculated Ventilation cfm	0
ft²/ton	210.22	Number of People	0.00
cfm/ton	416.81	People per 1000 ft²	0
Conditioned ft²	226.6		

Conditions at Time of Heating Peak

Outside	DB / WB / HR	16.4 °F	/	12.6 °F	/	5.3 gr/lb
Room	DB / RH / HR	70.0 °F	/	4.9 %	/	5.2 gr/lb

	Instant Sensible (Btu/h)	Time Delay Sensible (Btu/h)	Latent (Btu/h)	Total (Btu/h)	Percent of Total (%)
Roof	0	0	0	0	0.0
Other Roof	0	0	0	0	0.0
Glass	-7669	0	0	-7669	111.1
Door	0	40	0	40	-0.6
Wall	0	-67	0	-67	1.0
Below-Grade Wall	0	0	0	0	0.0
Other Wall	0	0	0	0	0.0
Partition	0	921	0	921	-13.4
Exterior Floor	0	0	0	0	0.0
Interior Floor	0	0	0	0	0.0
Slab	0	-1	0	-1	0.0
Other Floor	0	0	0	0	0.0
Infiltration	0	0	0	0	0.0
Envelope Subtotal	-7669	893	0	-6776	-
People	0	0	0	0	0.0
Lights	0	0	0	0	0.0
RA Sensible (Lights)	0	0	0	0	0.0
Miscellaneous Loads	0	0	0	0	0.0
Internal Subtotal	0	0	0	0	-
RA (All Other)	0	0	0	0	0.0
DOA Direct to Room	0	0	0	0	0.0
Ceiling	0	-127	0	-127	1.8
Refrigeration	0	0	0	0	0.0
Service Water	0	0	0	0	0.0
HVAC Equipment Losses	0	0	0	0	0.0
Adj Air Transfer Heat	0	0	0	0	0.0
Sizing Factor Correction	0	0	0	0	0.0
Time Delay Correction	0	0	0	0	0.0
Grand Total	-7669	767	0	-6902	100.0

Engineering Checks

Heating Mbh	-6.90	Input Ventilation cfm	449
Heating cfm	449.38	Calculated Ventilation cfm	0
ft²/Mbh	-32.83	Number of People	0.00
cfm/Mbh	-65.11	People per 1000 ft²	0
Conditioned ft²	226.6		

ROOM_01_STAIR 2

Conditions at Time of Cooling Peak

Outside	DB / WB / HR	80.4 °F	/	70.9 °F	/	99.4 gr/lb
Room	DB / RH / HR	81.0 °F	/	39.9 %	/	62.8 gr/lb

	Instant Sensible (Btu/h)	Time Delay Sensible (Btu/h)	Latent (Btu/h)	Total (Btu/h)	Percent of Total (%)
Roof	0	0	0	0	0.0
Other Roof	0	0	0	0	0.0
Glass	5883	9821	0	15704	144.9
Door	0	-58	0	-58	-0.5
Wall	0	96	0	96	0.9
Below-Grade Wall	0	0	0	0	0.0
Other Wall	0	0	0	0	0.0
Partition	0	-2344	0	-2344	-21.6
Exterior Floor	0	0	0	0	0.0
Interior Floor	0	0	0	0	0.0
Slab	0	-872	0	-872	-8.0
Other Floor	0	0	0	0	0.0
Infiltration	0	0	0	0	0.0
Envelope Subtotal	5883	6643	0	12526	-
People	0	0	0	0	0.0
Lights	144	180	0	324	3.0
RA Sensible (Lights)	165	0	0	165	1.5
Miscellaneous Loads	0	0	0	0	0.0
Internal Subtotal	309	180	0	489	-
RA (All Other)	0	0	0	0	0.0
DOA Direct to Room	0	0	0	0	0.0
Ceiling	0	-2167	0	-2167	-20.0
Refrigeration	0	0	0	0	0.0
Service Water	0	0	0	0	0.0
HVAC Equipment Losses	0	0	0	0	0.0
Adj Air Transfer Heat	0	0	0	0	0.0
Sizing Factor Correction	0	0	0	0	0.0
Time Delay Correction	0	-13	0	-13	-0.1
Grand Total	6192	4642	0	10834	100.0

Engineering Checks

Cooling tons	0.90	Input Ventilation cfm	375
Cooling cfm	375.46	Calculated Ventilation cfm	0
ft²/ton	250.86	Number of People	0.00
cfm/ton	415.77	People per 1000 ft²	0
Conditioned ft²	226.5		

Conditions at Time of Heating Peak

Outside	DB / WB / HR	16.4 °F	/	12.6 °F	/	5.3 gr/lb
Room	DB / RH / HR	70.0 °F	/	4.9 %	/	5.2 gr/lb

	Instant Sensible (Btu/h)	Time Delay Sensible (Btu/h)	Latent (Btu/h)	Total (Btu/h)	Percent of Total (%)
Roof	0	0	0	0	0.0
Other Roof	0	0	0	0	0.0
Glass	-7390	0	0	-7390	117.4
Door	0	38	0	38	-0.6
Wall	0	-78	0	-78	1.2
Below-Grade Wall	0	0	0	0	0.0
Other Wall	0	0	0	0	0.0
Partition	0	924	0	924	-14.7
Exterior Floor	0	0	0	0	0.0
Interior Floor	0	0	0	0	0.0
Slab	0	-1	0	-1	0.0
Other Floor	0	0	0	0	0.0
Infiltration	0	0	0	0	0.0
Envelope Subtotal	-7390	882	0	-6508	-
People	0	0	0	0	0.0
Lights	0	0	0	0	0.0
RA Sensible (Lights)	0	0	0	0	0.0
Miscellaneous Loads	0	0	0	0	0.0
Internal Subtotal	0	0	0	0	-
RA (All Other)	0	0	0	0	0.0
DOA Direct to Room	0	0	0	0	0.0
Ceiling	0	212	0	212	-3.4
Refrigeration	0	0	0	0	0.0
Service Water	0	0	0	0	0.0
HVAC Equipment Losses	0	0	0	0	0.0
Adj Air Transfer Heat	0	0	0	0	0.0
Sizing Factor Correction	0	0	0	0	0.0
Time Delay Correction	0	0	0	0	0.0
Grand Total	-7390	1094	0	-6296	100.0

Engineering Checks

Heating Mbh	-6.30	Input Ventilation cfm	375
Heating cfm	375.46	Calculated Ventilation cfm	0
ft²/Mbh	-35.97	Number of People	0.00
cfm/Mbh	-59.63	People per 1000 ft²	0
Conditioned ft²	226.5		

ROOM_02_200_CONF RM_R04

Conditions at Time of Cooling Peak

Outside	DB / WB / HR	83.2 °F	/	71.0 °F	/	95.0 gr/lb
Room	DB / RH / HR	75.0 °F	/	50.1 %	/	64.8 gr/lb

	Instant Sensible (Btu/h)	Time Delay Sensible (Btu/h)	Latent (Btu/h)	Total (Btu/h)	Percent of Total (%)
Roof	0	0	0	0	0.0
Other Roof	0	0	0	0	0.0
Glass	1206	3316	0	4523	50.5
Door	0	-59	0	-59	-0.7
Wall	0	31	0	31	0.3
Below-Grade Wall	0	0	0	0	0.0
Other Wall	0	0	0	0	0.0
Partition	0	114	0	114	1.3
Exterior Floor	0	-1	0	-1	0.0
Interior Floor	0	-852	0	-852	-9.5
Slab	0	0	0	0	0.0
Other Floor	0	0	0	0	0.0
Infiltration	0	0	0	0	0.0
Envelope Subtotal	1206	2548	0	3755	-
People	249	541	474	1263	14.1
Lights	537	1355	0	1892	21.1
RA Sensible (Lights)	617	0	0	617	6.9
Miscellaneous Loads	611	670	0	1281	14.3
Internal Subtotal	2014	2566	474	5054	-
RA (All Other)	0	0	0	0	0.0
DOA Direct to Room	0	0	0	0	0.0
Ceiling	0	242	0	242	2.7
Refrigeration	0	0	0	0	0.0
Service Water	0	0	0	0	0.0
HVAC Equipment Losses	0	0	0	0	0.0
Adj Air Transfer Heat	0	0	0	0	0.0
Sizing Factor Correction	0	0	0	0	0.0
Time Delay Correction	0	-98	0	-98	-1.1
Grand Total	3220	5258	474	8952	100.0

Engineering Checks

Cooling tons	0.75	Input Ventilation cfm	40
Cooling cfm	814.95	Calculated Ventilation cfm	119
ft²/ton	635.37	Number of People	2.37
cfm/ton	1,092.22	People per 1000 ft²	5
Conditioned ft²	473.9		

Conditions at Time of Heating Peak

Outside	DB / WB / HR	16.4 °F	/	12.6 °F	/	5.3 gr/lb
Room	DB / RH / HR	70.0 °F	/	4.9 %	/	5.2 gr/lb

	Instant Sensible (Btu/h)	Time Delay Sensible (Btu/h)	Latent (Btu/h)	Total (Btu/h)	Percent of Total (%)
Roof	0	0	0	0	0.0
Other Roof	0	0	0	0	0.0
Glass	-4250	0	0	-4250	64.6
Door	0	47	0	47	-0.7
Wall	0	-110	0	-110	1.7
Below-Grade Wall	0	0	0	0	0.0
Other Wall	0	0	0	0	0.0
Partition	0	-912	0	-912	13.9
Exterior Floor	0	-2	0	-2	0.0
Interior Floor	0	23	0	23	-0.3
Slab	0	0	0	0	0.0
Other Floor	0	0	0	0	0.0
Infiltration	0	0	0	0	0.0
Envelope Subtotal	-4250	-954	0	-5204	-
People	0	0	0	0	0.0
Lights	0	0	0	0	0.0
RA Sensible (Lights)	0	0	0	0	0.0
Miscellaneous Loads	0	0	0	0	0.0
Internal Subtotal	0	0	0	0	-
RA (All Other)	0	0	0	0	0.0
DOA Direct to Room	0	0	0	0	0.0
Ceiling	0	-1376	0	-1376	20.9
Refrigeration	0	0	0	0	0.0
Service Water	0	0	0	0	0.0
HVAC Equipment Losses	0	0	0	0	0.0
Adj Air Transfer Heat	0	0	0	0	0.0
Sizing Factor Correction	0	0	0	0	0.0
Time Delay Correction	0	0	0	0	0.0
Grand Total	-4250	-2330	0	-6580	100.0

Engineering Checks

Heating Mbh	-6.58	Input Ventilation cfm	40
Heating cfm	244.48	Calculated Ventilation cfm	64
ft²/Mbh	-72.03	Number of People	2.37
cfm/Mbh	-37.16	People per 1000 ft²	5
Conditioned ft²	473.9		

ROOM_02_200A_CORRIDOR_R03

Conditions at Time of Cooling Peak

Outside	DB / WB / HR	87.1 °F	/	72.9 °F	/	99.5 gr/lb
Room	DB / RH / HR	81.0 °F	/	39.9 %	/	62.8 gr/lb

	Instant Sensible (Btu/h)	Time Delay Sensible (Btu/h)	Latent (Btu/h)	Total (Btu/h)	Percent of Total (%)
Roof	0	0	0	0	0.0
Other Roof	0	0	0	0	0.0
Glass	-21	64	0	42	2.7
Door	0	-36	0	-36	-2.3
Wall	0	0	0	0	0.0
Below-Grade Wall	0	0	0	0	0.0
Other Wall	0	0	0	0	0.0
Partition	0	-413	0	-413	-26.3
Exterior Floor	0	0	0	0	0.0
Interior Floor	0	-36	0	-36	-2.3
Slab	0	0	0	0	0.0
Other Floor	0	0	0	0	0.0
Infiltration	0	0	0	0	0.0
Envelope Subtotal	-21	-421	0	-442	-
People	0	0	0	0	0.0
Lights	279	654	0	933	59.5
RA Sensible (Lights)	320	0	0	320	20.4
Miscellaneous Loads	0	0	0	0	0.0
Internal Subtotal	600	654	0	1253	-
RA (All Other)	0	0	0	0	0.0
DOA Direct to Room	0	0	0	0	0.0
Ceiling	0	772	0	772	49.2
Refrigeration	0	0	0	0	0.0
Service Water	0	0	0	0	0.0
HVAC Equipment Losses	0	0	0	0	0.0
Adj Air Transfer Heat	0	0	0	0	0.0
Sizing Factor Correction	0	0	0	0	0.0
Time Delay Correction	0	-15	0	-15	-0.9
Grand Total	578	990	0	1569	100.0

Engineering Checks

Cooling tons	0.13	Input Ventilation cfm	28
Cooling cfm	306.05	Calculated Ventilation cfm	45
ft²/ton	3512.40	Number of People	0.00
cfm/ton	2,340.86	People per 1000 ft²	0
Conditioned ft²	459.1		

Conditions at Time of Heating Peak

Outside	DB / WB / HR	16.4 °F	/	12.6 °F	/	5.3 gr/lb
Room	DB / RH / HR	70.0 °F	/	4.9 %	/	5.2 gr/lb

	Instant Sensible (Btu/h)	Time Delay Sensible (Btu/h)	Latent (Btu/h)	Total (Btu/h)	Percent of Total (%)
Roof	0	0	0	0	0.0
Other Roof	0	0	0	0	0.0
Glass	-95	0	0	-95	9.8
Door	0	-4	0	-4	0.4
Wall	0	0	0	0	0.0
Below-Grade Wall	0	0	0	0	0.0
Other Wall	0	0	0	0	0.0
Partition	0	-130	0	-130	13.4
Exterior Floor	0	0	0	0	0.0
Interior Floor	0	430	0	430	-44.3
Slab	0	0	0	0	0.0
Other Floor	0	0	0	0	0.0
Infiltration	0	0	0	0	0.0
Envelope Subtotal	-95	296	0	201	-
People	0	0	0	0	0.0
Lights	0	0	0	0	0.0
RA Sensible (Lights)	0	0	0	0	0.0
Miscellaneous Loads	0	0	0	0	0.0
Internal Subtotal	0	0	0	0	-
RA (All Other)	0	0	0	0	0.0
DOA Direct to Room	0	0	0	0	0.0
Ceiling	0	-1171	0	-1171	120.7
Refrigeration	0	0	0	0	0.0
Service Water	0	0	0	0	0.0
HVAC Equipment Losses	0	0	0	0	0.0
Adj Air Transfer Heat	0	0	0	0	0.0
Sizing Factor Correction	0	0	0	0	0.0
Time Delay Correction	0	0	0	0	0.0
Grand Total	-95	-875	0	-970	100.0

Engineering Checks

Heating Mbh	-0.97	Input Ventilation cfm	28
Heating cfm	91.81	Calculated Ventilation cfm	24
ft²/Mbh	-473.20	Number of People	0.00
cfm/Mbh	-94.63	People per 1000 ft²	0
Conditioned ft²	459.1		

ROOM_02_202_STORAGE_R04

Conditions at Time of Cooling Peak

Outside	DB / WB / HR	87.1 °F	/	72.9 °F	/	99.5 gr/lb
Room	DB / RH / HR	81.0 °F	/	39.9 %	/	62.8 gr/lb

	Instant Sensible (Btu/h)	Time Delay Sensible (Btu/h)	Latent (Btu/h)	Total (Btu/h)	Percent of Total (%)
Roof	0	0	0	0	0.0
Other Roof	0	0	0	0	0.0
Glass	0	0	0	0	0.0
Door	0	-5	0	-5	-0.7
Wall	0	0	0	0	0.0
Below-Grade Wall	0	0	0	0	0.0
Other Wall	0	0	0	0	0.0
Partition	0	-212	0	-212	-26.5
Exterior Floor	0	0	0	0	0.0
Interior Floor	0	-97	0	-97	-12.1
Slab	0	0	0	0	0.0
Other Floor	0	0	0	0	0.0
Infiltration	0	0	0	0	0.0
Envelope Subtotal	0	-314	0	-314	-
People	0	0	0	0	0.0
Lights	93	233	0	326	40.7
RA Sensible (Lights)	106	0	0	106	13.3
Miscellaneous Loads	206	222	0	428	53.4
Internal Subtotal	405	455	0	860	-
RA (All Other)	0	0	0	0	0.0
DOA Direct to Room	0	0	0	0	0.0
Ceiling	0	256	0	256	31.9
Refrigeration	0	0	0	0	0.0
Service Water	0	0	0	0	0.0
HVAC Equipment Losses	0	0	0	0	0.0
Adj Air Transfer Heat	0	0	0	0	0.0
Sizing Factor Correction	0	0	0	0	0.0
Time Delay Correction	0	0	0	0	0.0
Grand Total	405	397	0	801	100.0

Engineering Checks

Cooling tons	0.07	Input Ventilation cfm	10
Cooling cfm	106.36	Calculated Ventilation cfm	16
ft²/ton	2389.56	Number of People	0.00
cfm/ton	1,592.69	People per 1000 ft²	0
Conditioned ft²	159.5		

Conditions at Time of Heating Peak

Outside	DB / WB / HR	16.4 °F	/	12.6 °F	/	5.3 gr/lb
Room	DB / RH / HR	70.0 °F	/	4.9 %	/	5.2 gr/lb

	Instant Sensible (Btu/h)	Time Delay Sensible (Btu/h)	Latent (Btu/h)	Total (Btu/h)	Percent of Total (%)
Roof	0	0	0	0	0.0
Other Roof	0	0	0	0	0.0
Glass	0	0	0	0	0.0
Door	0	0	0	0	0.1
Wall	0	0	0	0	0.0
Below-Grade Wall	0	0	0	0	0.0
Other Wall	0	0	0	0	0.0
Partition	0	-36	0	-36	10.6
Exterior Floor	0	0	0	0	0.0
Interior Floor	0	106	0	106	-31.3
Slab	0	0	0	0	0.0
Other Floor	0	0	0	0	0.0
Infiltration	0	0	0	0	0.0
Envelope Subtotal	0	70	0	70	-
People	0	0	0	0	0.0
Lights	0	0	0	0	0.0
RA Sensible (Lights)	0	0	0	0	0.0
Miscellaneous Loads	0	0	0	0	0.0
Internal Subtotal	0	0	0	0	-
RA (All Other)	0	0	0	0	0.0
DOA Direct to Room	0	0	0	0	0.0
Ceiling	0	-407	0	-407	120.6
Refrigeration	0	0	0	0	0.0
Service Water	0	0	0	0	0.0
HVAC Equipment Losses	0	0	0	0	0.0
Adj Air Transfer Heat	0	0	0	0	0.0
Sizing Factor Correction	0	0	0	0	0.0
Time Delay Correction	0	0	0	0	0.0
Grand Total	0	-337	0	-337	100.0

Engineering Checks

Heating Mbh	-0.34	Input Ventilation cfm	10
Heating cfm	31.91	Calculated Ventilation cfm	8
ft²/Mbh	-472.90	Number of People	0.00
cfm/Mbh	-94.58	People per 1000 ft²	0
Conditioned ft²	159.5		

ROOM_02_203_CONF RM_R04

Conditions at Time of Cooling Peak

Outside	DB / WB / HR	88.3 °F	/	73.2 °F	/	99.5 gr/lb
Room	DB / RH / HR	75.0 °F	/	63.3 %	/	82.0 gr/lb

	Instant Sensible (Btu/h)	Time Delay Sensible (Btu/h)	Latent (Btu/h)	Total (Btu/h)	Percent of Total (%)
Roof	0	0	0	0	0.0
Other Roof	0	0	0	0	0.0
Glass	0	0	0	0	0.0
Door	0	-56	0	-56	-0.5
Wall	0	0	0	0	0.0
Below-Grade Wall	0	0	0	0	0.0
Other Wall	0	0	0	0	0.0
Partition	0	-1853	0	-1853	-15.2
Exterior Floor	0	0	0	0	0.0
Interior Floor	0	-1104	0	-1104	-9.1
Slab	0	0	0	0	0.0
Other Floor	0	0	0	0	0.0
Infiltration	0	0	0	0	0.0
Envelope Subtotal	0	-3013	0	-3013	-
People	2351	5823	4477	12651	104.0
Lights	355	1084	0	1439	11.8
RA Sensible (Lights)	408	0	0	408	3.4
Miscellaneous Loads	404	529	0	933	7.7
Internal Subtotal	3518	7436	4477	15431	-
RA (All Other)	0	0	0	0	0.0
DOA Direct to Room	0	0	0	0	0.0
Ceiling	0	-216	0	-216	-1.8
Refrigeration	0	0	0	0	0.0
Service Water	0	0	0	0	0.0
HVAC Equipment Losses	0	0	0	0	0.0
Adj Air Transfer Heat	0	0	0	0	0.0
Sizing Factor Correction	0	0	0	0	0.0
Time Delay Correction	0	-36	0	-36	-0.3
Grand Total	3518	4170	4477	12166	100.0

Engineering Checks

Cooling tons	1.01	Input Ventilation cfm	131
Cooling cfm	1,453.00	Calculated Ventilation cfm	212
ft²/ton	309.21	Number of People	22.40
cfm/ton	1,432.94	People per 1000 ft²	71
Conditioned ft²	313.4		

Conditions at Time of Heating Peak

Outside	DB / WB / HR	16.4 °F	/	12.6 °F	/	5.3 gr/lb
Room	DB / RH / HR	70.0 °F	/	4.9 %	/	5.2 gr/lb

	Instant Sensible (Btu/h)	Time Delay Sensible (Btu/h)	Latent (Btu/h)	Total (Btu/h)	Percent of Total (%)
Roof	0	0	0	0	0.0
Other Roof	0	0	0	0	0.0
Glass	0	0	0	0	0.0
Door	0	1	0	1	-0.2
Wall	0	0	0	0	0.0
Below-Grade Wall	0	0	0	0	0.0
Other Wall	0	0	0	0	0.0
Partition	0	-26	0	-26	4.2
Exterior Floor	0	0	0	0	0.0
Interior Floor	0	201	0	201	-32.0
Slab	0	0	0	0	0.0
Other Floor	0	0	0	0	0.0
Infiltration	0	0	0	0	0.0
Envelope Subtotal	0	176	0	176	-
People	0	0	0	0	0.0
Lights	0	0	0	0	0.0
RA Sensible (Lights)	0	0	0	0	0.0
Miscellaneous Loads	0	0	0	0	0.0
Internal Subtotal	0	0	0	0	-
RA (All Other)	0	0	0	0	0.0
DOA Direct to Room	0	0	0	0	0.0
Ceiling	0	-804	0	-804	128.0
Refrigeration	0	0	0	0	0.0
Service Water	0	0	0	0	0.0
HVAC Equipment Losses	0	0	0	0	0.0
Adj Air Transfer Heat	0	0	0	0	0.0
Sizing Factor Correction	0	0	0	0	0.0
Time Delay Correction	0	0	0	0	0.0
Grand Total	0	-628	0	-628	100.0

Engineering Checks

Heating Mbh	-0.63	Input Ventilation cfm	131
Heating cfm	435.90	Calculated Ventilation cfm	114
ft²/Mbh	-499.06	Number of People	22.40
cfm/Mbh	-693.97	People per 1000 ft²	71
Conditioned ft²	313.4		

ROOM_02_205_WOMEN'S TOILET_R03

Conditions at Time of Cooling Peak

Outside	DB / WB / HR	87.8 °F	/	73.1 °F	/	99.5 gr/lb
Room	DB / RH / HR	75.0 °F	/	49.1 %	/	63.4 gr/lb

	Instant Sensible (Btu/h)	Time Delay Sensible (Btu/h)	Latent (Btu/h)	Total (Btu/h)	Percent of Total (%)
Roof	0	0	0	0	0.0
Other Roof	0	0	0	0	0.0
Glass	0	0	0	0	0.0
Door	0	10	0	10	0.4
Wall	0	0	0	0	0.0
Below-Grade Wall	0	0	0	0	0.0
Other Wall	0	0	0	0	0.0
Partition	0	4	0	4	0.2
Exterior Floor	0	0	0	0	0.0
Interior Floor	0	-125	0	-125	-5.2
Slab	0	0	0	0	0.0
Other Floor	0	0	0	0	0.0
Infiltration	0	0	0	0	0.0
Envelope Subtotal	0	-112	0	-112	-
People	25	65	40	130	5.4
Lights	233	663	0	896	37.0
RA Sensible (Lights)	268	0	0	268	11.0
Miscellaneous Loads	333	406	0	739	30.5
Internal Subtotal	859	1134	40	2033	-
RA (All Other)	0	0	0	0	0.0
DOA Direct to Room	0	0	0	0	0.0
Ceiling	0	502	0	502	20.7
Refrigeration	0	0	0	0	0.0
Service Water	0	0	0	0	0.0
HVAC Equipment Losses	0	0	0	0	0.0
Adj Air Transfer Heat	0	0	0	0	0.0
Sizing Factor Correction	0	0	0	0	0.0
Time Delay Correction	0	0	0	0	0.0
Grand Total	859	1524	40	2423	100.0

Engineering Checks

Cooling tons	0.20	Input Ventilation cfm	0
Cooling cfm	96.77	Calculated Ventilation cfm	14
ft²/ton	1278.59	Number of People	0.26
cfm/ton	479.20	People per 1000 ft²	1
Conditioned ft²	258.1		

Conditions at Time of Heating Peak

Outside	DB / WB / HR	16.4 °F	/	12.6 °F	/	5.3 gr/lb
Room	DB / RH / HR	70.0 °F	/	4.9 %	/	5.2 gr/lb

	Instant Sensible (Btu/h)	Time Delay Sensible (Btu/h)	Latent (Btu/h)	Total (Btu/h)	Percent of Total (%)
Roof	0	0	0	0	0.0
Other Roof	0	0	0	0	0.0
Glass	0	0	0	0	0.0
Door	0	1	0	1	-0.2
Wall	0	0	0	0	0.0
Below-Grade Wall	0	0	0	0	0.0
Other Wall	0	0	0	0	0.0
Partition	0	-6	0	-6	1.0
Exterior Floor	0	0	0	0	0.0
Interior Floor	0	59	0	59	-10.1
Slab	0	0	0	0	0.0
Other Floor	0	0	0	0	0.0
Infiltration	0	0	0	0	0.0
Envelope Subtotal	0	54	0	54	-
People	0	0	0	0	0.0
Lights	0	0	0	0	0.0
RA Sensible (Lights)	0	0	0	0	0.0
Miscellaneous Loads	0	0	0	0	0.0
Internal Subtotal	0	0	0	0	-
RA (All Other)	0	0	0	0	0.0
DOA Direct to Room	0	0	0	0	0.0
Ceiling	0	-634	0	-634	109.3
Refrigeration	0	0	0	0	0.0
Service Water	0	0	0	0	0.0
HVAC Equipment Losses	0	0	0	0	0.0
Adj Air Transfer Heat	0	0	0	0	0.0
Sizing Factor Correction	0	0	0	0	0.0
Time Delay Correction	0	0	0	0	0.0
Grand Total	0	-580	0	-580	100.0

Engineering Checks

Heating Mbh	-0.58	Input Ventilation cfm	0
Heating cfm	29.03	Calculated Ventilation cfm	8
ft²/Mbh	-444.95	Number of People	0.26
cfm/Mbh	-50.04	People per 1000 ft²	1
Conditioned ft²	258.1		

ROOM_02_206_MEN'S TOILET_R03

Conditions at Time of Cooling Peak

Outside	DB / WB / HR	88.3 °F	/	73.2 °F	/	99.5 gr/lb
Room	DB / RH / HR	75.0 °F	/	49.0 %	/	63.4 gr/lb

	Instant Sensible (Btu/h)	Time Delay Sensible (Btu/h)	Latent (Btu/h)	Total (Btu/h)	Percent of Total (%)
Roof	0	0	0	0	0.0
Other Roof	0	0	0	0	0.0
Glass	0	0	0	0	0.0
Door	0	7	0	7	0.3
Wall	0	0	0	0	0.0
Below-Grade Wall	0	0	0	0	0.0
Other Wall	0	0	0	0	0.0
Partition	0	232	0	232	8.4
Exterior Floor	0	0	0	0	0.0
Interior Floor	0	-131	0	-131	-4.8
Slab	0	0	0	0	0.0
Other Floor	0	0	0	0	0.0
Infiltration	0	0	0	0	0.0
Envelope Subtotal	0	108	0	108	-
People	26	68	41	135	4.9
Lights	238	698	0	936	34.0
RA Sensible (Lights)	273	0	0	273	9.9
Miscellaneous Loads	340	427	0	767	27.9
Internal Subtotal	878	1193	41	2112	-
RA (All Other)	0	0	0	0	0.0
DOA Direct to Room	0	0	0	0	0.0
Ceiling	0	535	0	535	19.4
Refrigeration	0	0	0	0	0.0
Service Water	0	0	0	0	0.0
HVAC Equipment Losses	0	0	0	0	0.0
Adj Air Transfer Heat	0	0	0	0	0.0
Sizing Factor Correction	0	0	0	0	0.0
Time Delay Correction	0	0	0	0	0.0
Grand Total	878	1836	41	2754	100.0

Engineering Checks

Cooling tons	0.23	Input Ventilation cfm	0
Cooling cfm	111.62	Calculated Ventilation cfm	16
ft²/ton	1149.20	Number of People	0.26
cfm/ton	486.25	People per 1000 ft²	1
Conditioned ft²	263.7		

Conditions at Time of Heating Peak

Outside	DB / WB / HR	16.4 °F	/	12.6 °F	/	5.3 gr/lb
Room	DB / RH / HR	70.0 °F	/	4.9 %	/	5.2 gr/lb

	Instant Sensible (Btu/h)	Time Delay Sensible (Btu/h)	Latent (Btu/h)	Total (Btu/h)	Percent of Total (%)
Roof	0	0	0	0	0.0
Other Roof	0	0	0	0	0.0
Glass	0	0	0	0	0.0
Door	0	1	0	1	-0.2
Wall	0	0	0	0	0.0
Below-Grade Wall	0	0	0	0	0.0
Other Wall	0	0	0	0	0.0
Partition	0	-11	0	-11	1.8
Exterior Floor	0	0	0	0	0.0
Interior Floor	0	60	0	60	-9.9
Slab	0	0	0	0	0.0
Other Floor	0	0	0	0	0.0
Infiltration	0	0	0	0	0.0
Envelope Subtotal	0	50	0	50	-
People	0	0	0	0	0.0
Lights	0	0	0	0	0.0
RA Sensible (Lights)	0	0	0	0	0.0
Miscellaneous Loads	0	0	0	0	0.0
Internal Subtotal	0	0	0	0	-
RA (All Other)	0	0	0	0	0.0
DOA Direct to Room	0	0	0	0	0.0
Ceiling	0	-653	0	-653	108.3
Refrigeration	0	0	0	0	0.0
Service Water	0	0	0	0	0.0
HVAC Equipment Losses	0	0	0	0	0.0
Adj Air Transfer Heat	0	0	0	0	0.0
Sizing Factor Correction	0	0	0	0	0.0
Time Delay Correction	0	0	0	0	0.0
Grand Total	0	-603	0	-603	100.0

Engineering Checks

Heating Mbh	-0.60	Input Ventilation cfm	0
Heating cfm	33.48	Calculated Ventilation cfm	9
ft²/Mbh	-437.50	Number of People	0.26
cfm/Mbh	-55.55	People per 1000 ft²	1
Conditioned ft²	263.7		

ROOM_02_207_BREAK RM_R03

Conditions at Time of Cooling Peak

Outside	DB / WB / HR	88.3 °F	/	73.2 °F	/	99.5 gr/lb
Room	DB / RH / HR	74.9 °F	/	61.9 %	/	80.1 gr/lb

	Instant Sensible (Btu/h)	Time Delay Sensible (Btu/h)	Latent (Btu/h)	Total (Btu/h)	Percent of Total (%)
Roof	0	0	0	0	0.0
Other Roof	0	0	0	0	0.0
Glass	106	184	0	289	2.5
Door	0	0	0	0	0.0
Wall	0	0	0	0	0.0
Below-Grade Wall	0	0	0	0	0.0
Other Wall	0	0	0	0	0.0
Partition	0	-2596	0	-2596	-22.5
Exterior Floor	0	0	0	0	0.0
Interior Floor	0	-1023	0	-1023	-8.9
Slab	0	0	0	0	0.0
Other Floor	0	0	0	0	0.0
Infiltration	0	0	0	0	0.0
Envelope Subtotal	106	-3435	0	-3329	-
People	1070	2947	2547	6563	56.8
Lights	93	295	0	388	3.4
RA Sensible (Lights)	107	0	0	107	0.9
Miscellaneous Loads	3222	4477	1541	9240	80.0
Internal Subtotal	4492	7718	4087	16298	-
RA (All Other)	0	0	0	0	0.0
DOA Direct to Room	0	0	0	0	0.0
Ceiling	0	-800	0	-800	-6.9
Refrigeration	0	0	0	0	0.0
Service Water	0	0	0	0	0.0
HVAC Equipment Losses	0	0	0	0	0.0
Adj Air Transfer Heat	0	0	0	0	0.0
Sizing Factor Correction	0	0	0	0	0.0
Time Delay Correction	0	-622	0	-622	-5.4
Grand Total	4598	2861	4087	11546	100.0

Engineering Checks

Cooling tons	0.96	Input Ventilation cfm	63
Cooling cfm	699.83	Calculated Ventilation cfm	102
ft²/ton	144.44	Number of People	9.29
cfm/ton	727.18	People per 1000 ft²	67
Conditioned ft²	139.0		

Conditions at Time of Heating Peak

Outside	DB / WB / HR	16.4 °F	/	12.6 °F	/	5.3 gr/lb
Room	DB / RH / HR	70.0 °F	/	4.9 %	/	5.2 gr/lb

	Instant Sensible (Btu/h)	Time Delay Sensible (Btu/h)	Latent (Btu/h)	Total (Btu/h)	Percent of Total (%)
Roof	0	0	0	0	0.0
Other Roof	0	0	0	0	0.0
Glass	-60	0	0	-60	14.7
Door	0	0	0	0	0.0
Wall	0	0	0	0	0.0
Below-Grade Wall	0	0	0	0	0.0
Other Wall	0	0	0	0	0.0
Partition	0	5	0	5	-1.2
Exterior Floor	0	0	0	0	0.0
Interior Floor	0	17	0	17	-4.1
Slab	0	0	0	0	0.0
Other Floor	0	0	0	0	0.0
Infiltration	0	0	0	0	0.0
Envelope Subtotal	-60	21	0	-39	-
People	0	0	0	0	0.0
Lights	0	0	0	0	0.0
RA Sensible (Lights)	0	0	0	0	0.0
Miscellaneous Loads	0	0	0	0	0.0
Internal Subtotal	0	0	0	0	-
RA (All Other)	0	0	0	0	0.0
DOA Direct to Room	0	0	0	0	0.0
Ceiling	0	-371	0	-371	90.5
Refrigeration	0	0	0	0	0.0
Service Water	0	0	0	0	0.0
HVAC Equipment Losses	0	0	0	0	0.0
Adj Air Transfer Heat	0	0	0	0	0.0
Sizing Factor Correction	0	0	0	0	0.0
Time Delay Correction	0	0	0	0	0.0
Grand Total	-60	-349	0	-409	100.0

Engineering Checks

Heating Mbh	-0.41	Input Ventilation cfm	63
Heating cfm	209.95	Calculated Ventilation cfm	55
ft²/Mbh	-339.49	Number of People	9.29
cfm/Mbh	-512.86	People per 1000 ft²	67
Conditioned ft²	139.0		

ROOM_02_210A_CORRIDOR_R04

Conditions at Time of Cooling Peak

Outside	DB / WB / HR	89.4 °F	/	73.5 °F	/	99.5 gr/lb
Room	DB / RH / HR	81.0 °F	/	39.9 %	/	62.8 gr/lb

	Instant Sensible (Btu/h)	Time Delay Sensible (Btu/h)	Latent (Btu/h)	Total (Btu/h)	Percent of Total (%)
Roof	0	0	0	0	0.0
Other Roof	0	0	0	0	0.0
Glass	116	789	0	905	128.2
Door	0	-65	0	-65	-9.2
Wall	0	0	0	0	0.0
Below-Grade Wall	0	0	0	0	0.0
Other Wall	0	0	0	0	0.0
Partition	0	-357	0	-357	-50.6
Exterior Floor	0	0	0	0	0.0
Interior Floor	0	-264	0	-264	-37.5
Slab	0	0	0	0	0.0
Other Floor	0	0	0	0	0.0
Infiltration	0	0	0	0	0.0
Envelope Subtotal	116	103	0	218	-
People	0	0	0	0	0.0
Lights	81	216	0	297	42.1
RA Sensible (Lights)	93	0	0	93	13.1
Miscellaneous Loads	0	0	0	0	0.0
Internal Subtotal	173	216	0	390	-
RA (All Other)	0	0	0	0	0.0
DOA Direct to Room	0	0	0	0	0.0
Ceiling	0	135	0	135	19.1
Refrigeration	0	0	0	0	0.0
Service Water	0	0	0	0	0.0
HVAC Equipment Losses	0	0	0	0	0.0
Adj Air Transfer Heat	0	0	0	0	0.0
Sizing Factor Correction	0	0	0	0	0.0
Time Delay Correction	0	-37	0	-37	-5.3
Grand Total	289	416	0	705	100.0

Engineering Checks

Cooling tons	0.06	Input Ventilation cfm	8
Cooling cfm	88.46	Calculated Ventilation cfm	13
ft²/ton	2258.18	Number of People	0.00
cfm/ton	1,504.64	People per 1000 ft²	0
Conditioned ft²	132.7		

Conditions at Time of Heating Peak

Outside	DB / WB / HR	16.4 °F	/	12.6 °F	/	5.3 gr/lb
Room	DB / RH / HR	70.0 °F	/	4.9 %	/	5.2 gr/lb

	Instant Sensible (Btu/h)	Time Delay Sensible (Btu/h)	Latent (Btu/h)	Total (Btu/h)	Percent of Total (%)
Roof	0	0	0	0	0.0
Other Roof	0	0	0	0	0.0
Glass	-389	0	0	-389	61.1
Door	0	11	0	11	-1.7
Wall	0	0	0	0	0.0
Below-Grade Wall	0	0	0	0	0.0
Other Wall	0	0	0	0	0.0
Partition	0	60	0	60	-9.4
Exterior Floor	0	0	0	0	0.0
Interior Floor	0	49	0	49	-7.8
Slab	0	0	0	0	0.0
Other Floor	0	0	0	0	0.0
Infiltration	0	0	0	0	0.0
Envelope Subtotal	-389	120	0	-269	-
People	0	0	0	0	0.0
Lights	0	0	0	0	0.0
RA Sensible (Lights)	0	0	0	0	0.0
Miscellaneous Loads	0	0	0	0	0.0
Internal Subtotal	0	0	0	0	-
RA (All Other)	0	0	0	0	0.0
DOA Direct to Room	0	0	0	0	0.0
Ceiling	0	-368	0	-368	57.8
Refrigeration	0	0	0	0	0.0
Service Water	0	0	0	0	0.0
HVAC Equipment Losses	0	0	0	0	0.0
Adj Air Transfer Heat	0	0	0	0	0.0
Sizing Factor Correction	0	0	0	0	0.0
Time Delay Correction	0	0	0	0	0.0
Grand Total	-389	-247	0	-636	100.0

Engineering Checks

Heating Mbh	-0.64	Input Ventilation cfm	8
Heating cfm	26.54	Calculated Ventilation cfm	7
ft²/Mbh	-208.57	Number of People	0.00
cfm/Mbh	-41.70	People per 1000 ft²	0
Conditioned ft²	132.7		

ROOM_02_210A_OPEN OFFICE_R04

Conditions at Time of Cooling Peak

Outside	DB / WB / HR	88.3 °F	/	73.2 °F	/	99.5 gr/lb
Room	DB / RH / HR	75.0 °F	/	49.9 %	/	64.5 gr/lb

	Instant Sensible (Btu/h)	Time Delay Sensible (Btu/h)	Latent (Btu/h)	Total (Btu/h)	Percent of Total (%)
Roof	0	0	0	0	0.0
Other Roof	0	0	0	0	0.0
Glass	4345	18208	0	22553	78.5
Door	0	0	0	0	0.0
Wall	0	-64	0	-64	-0.2
Below-Grade Wall	0	0	0	0	0.0
Other Wall	0	0	0	0	0.0
Partition	0	-333	0	-333	-1.2
Exterior Floor	0	0	0	0	0.0
Interior Floor	0	-8462	0	-8462	-29.5
Slab	0	0	0	0	0.0
Other Floor	0	0	0	0	0.0
Infiltration	0	0	0	0	0.0
Envelope Subtotal	4345	9349	0	13694	-
People	735	1848	1400	3982	13.9
Lights	716	2108	0	2824	9.8
RA Sensible (Lights)	822	0	0	822	2.9
Miscellaneous Loads	4490	6188	0	10678	37.2
Internal Subtotal	6762	10144	1400	18306	-
RA (All Other)	0	0	0	0	0.0
DOA Direct to Room	0	0	0	0	0.0
Ceiling	0	-1431	0	-1431	-5.0
Refrigeration	0	0	0	0	0.0
Service Water	0	0	0	0	0.0
HVAC Equipment Losses	0	0	0	0	0.0
Adj Air Transfer Heat	0	0	0	0	0.0
Sizing Factor Correction	0	0	0	0	0.0
Time Delay Correction	0	-1857	0	-1857	-6.5
Grand Total	11108	16206	1400	28713	100.0

Engineering Checks

Cooling tons	2.39	Input Ventilation cfm	83
Cooling cfm	1,215.87	Calculated Ventilation cfm	178
ft²/ton	331.44	Number of People	7.00
cfm/ton	508.05	People per 1000 ft²	9
Conditioned ft²	793.0		

Conditions at Time of Heating Peak

Outside	DB / WB / HR	16.4 °F	/	12.6 °F	/	5.3 gr/lb
Room	DB / RH / HR	70.0 °F	/	4.9 %	/	5.2 gr/lb

	Instant Sensible (Btu/h)	Time Delay Sensible (Btu/h)	Latent (Btu/h)	Total (Btu/h)	Percent of Total (%)
Roof	0	0	0	0	0.0
Other Roof	0	0	0	0	0.0
Glass	-7014	0	0	-7014	71.4
Door	0	0	0	0	0.0
Wall	0	-641	0	-641	6.5
Below-Grade Wall	0	0	0	0	0.0
Other Wall	0	0	0	0	0.0
Partition	0	55	0	55	-0.6
Exterior Floor	0	0	0	0	0.0
Interior Floor	0	18	0	18	-0.2
Slab	0	0	0	0	0.0
Other Floor	0	0	0	0	0.0
Infiltration	0	0	0	0	0.0
Envelope Subtotal	-7014	-568	0	-7583	-
People	0	0	0	0	0.0
Lights	0	0	0	0	0.0
RA Sensible (Lights)	0	0	0	0	0.0
Miscellaneous Loads	0	0	0	0	0.0
Internal Subtotal	0	0	0	0	-
RA (All Other)	0	0	0	0	0.0
DOA Direct to Room	0	0	0	0	0.0
Ceiling	0	-2235	0	-2235	22.8
Refrigeration	0	0	0	0	0.0
Service Water	0	0	0	0	0.0
HVAC Equipment Losses	0	0	0	0	0.0
Adj Air Transfer Heat	0	0	0	0	0.0
Sizing Factor Correction	0	0	0	0	0.0
Time Delay Correction	0	0	0	0	0.0
Grand Total	-7014	-2803	0	-9817	100.0

Engineering Checks

Heating Mbh	-9.82	Input Ventilation cfm	83
Heating cfm	364.76	Calculated Ventilation cfm	96
ft²/Mbh	-80.78	Number of People	7.00
cfm/Mbh	-37.16	People per 1000 ft²	9
Conditioned ft²	793.0		

ROOM_02_210B_OPEN OFFICE_R04

Conditions at Time of Cooling Peak

Outside	DB / WB / HR	83.9 °F	/	71.2 °F	/	95.0 gr/lb
Room	DB / RH / HR	75.0 °F	/	51.7 %	/	66.9 gr/lb

	Instant Sensible (Btu/h)	Time Delay Sensible (Btu/h)	Latent (Btu/h)	Total (Btu/h)	Percent of Total (%)
Roof	0	0	0	0	0.0
Other Roof	0	0	0	0	0.0
Glass	2996	3431	0	6427	36.3
Door	0	0	0	0	0.0
Wall	0	-63	0	-63	-0.4
Below-Grade Wall	0	0	0	0	0.0
Other Wall	0	0	0	0	0.0
Partition	0	0	0	0	0.0
Exterior Floor	0	0	0	0	0.0
Interior Floor	0	-2508	0	-2508	-14.2
Slab	0	0	0	0	0.0
Other Floor	0	0	0	0	0.0
Infiltration	0	0	0	0	0.0
Envelope Subtotal	2996	859	0	3855	-
People	808	1707	1925	4440	25.1
Lights	665	1409	0	2074	11.7
RA Sensible (Lights)	763	0	0	763	4.3
Miscellaneous Loads	4373	4613	0	8986	50.7
Internal Subtotal	6610	7729	1925	16263	-
RA (All Other)	0	0	0	0	0.0
DOA Direct to Room	0	0	0	0	0.0
Ceiling	0	-310	0	-310	-1.8
Refrigeration	0	0	0	0	0.0
Service Water	0	0	0	0	0.0
HVAC Equipment Losses	0	0	0	0	0.0
Adj Air Transfer Heat	0	0	0	0	0.0
Sizing Factor Correction	0	0	0	0	0.0
Time Delay Correction	0	-2099	0	-2099	-11.9
Grand Total	9606	6179	1925	17709	100.0

Engineering Checks

Cooling tons	1.48	Input Ventilation cfm	79
Cooling cfm	879.71	Calculated Ventilation cfm	129
ft²/ton	498.94	Number of People	7.00
cfm/ton	595.99	People per 1000 ft²	10
Conditioned ft²	736.3		

Conditions at Time of Heating Peak

Outside	DB / WB / HR	16.4 °F	/	12.6 °F	/	5.3 gr/lb
Room	DB / RH / HR	70.0 °F	/	4.9 %	/	5.2 gr/lb

	Instant Sensible (Btu/h)	Time Delay Sensible (Btu/h)	Latent (Btu/h)	Total (Btu/h)	Percent of Total (%)
Roof	0	0	0	0	0.0
Other Roof	0	0	0	0	0.0
Glass	-3324	0	0	-3324	60.1
Door	0	0	0	0	0.0
Wall	0	-242	0	-242	4.4
Below-Grade Wall	0	0	0	0	0.0
Other Wall	0	0	0	0	0.0
Partition	0	1	0	1	0.0
Exterior Floor	0	0	0	0	0.0
Interior Floor	0	32	0	32	-0.6
Slab	0	0	0	0	0.0
Other Floor	0	0	0	0	0.0
Infiltration	0	0	0	0	0.0
Envelope Subtotal	-3324	-209	0	-3533	-
People	0	0	0	0	0.0
Lights	0	0	0	0	0.0
RA Sensible (Lights)	0	0	0	0	0.0
Miscellaneous Loads	0	0	0	0	0.0
Internal Subtotal	0	0	0	0	-
RA (All Other)	0	0	0	0	0.0
DOA Direct to Room	0	0	0	0	0.0
Ceiling	0	-1994	0	-1994	36.1
Refrigeration	0	0	0	0	0.0
Service Water	0	0	0	0	0.0
HVAC Equipment Losses	0	0	0	0	0.0
Adj Air Transfer Heat	0	0	0	0	0.0
Sizing Factor Correction	0	0	0	0	0.0
Time Delay Correction	0	0	0	0	0.0
Grand Total	-3324	-2203	0	-5526	100.0

Engineering Checks

Heating Mbh	-5.53	Input Ventilation cfm	79
Heating cfm	263.91	Calculated Ventilation cfm	69
ft²/Mbh	-133.24	Number of People	7.00
cfm/Mbh	-47.75	People per 1000 ft²	10
Conditioned ft²	736.3		

ROOM_02_210C_OPEN OFFICE_R04

Conditions at Time of Cooling Peak

Outside	DB / WB / HR	90.3 °F	/	73.7 °F	/	99.5 gr/lb
Room	DB / RH / HR	75.0 °F	/	52.1 %	/	67.3 gr/lb

	Instant Sensible (Btu/h)	Time Delay Sensible (Btu/h)	Latent (Btu/h)	Total (Btu/h)	Percent of Total (%)
Roof	0	0	0	0	0.0
Other Roof	0	0	0	0	0.0
Glass	2019	2532	0	4551	24.9
Door	0	0	0	0	0.0
Wall	0	-98	0	-98	-0.5
Below-Grade Wall	0	0	0	0	0.0
Other Wall	0	0	0	0	0.0
Partition	0	-625	0	-625	-3.4
Exterior Floor	0	0	0	0	0.0
Interior Floor	0	-3361	0	-3361	-18.4
Slab	0	0	0	0	0.0
Other Floor	0	0	0	0	0.0
Infiltration	0	0	0	0	0.0
Envelope Subtotal	2019	-1552	0	467	-
People	924	2219	2199	5343	29.2
Lights	702	1949	0	2651	14.5
RA Sensible (Lights)	806	0	0	806	4.4
Miscellaneous Loads	4868	6451	0	11319	61.9
Internal Subtotal	7301	10619	2199	20119	-
RA (All Other)	0	0	0	0	0.0
DOA Direct to Room	0	0	0	0	0.0
Ceiling	0	-122	0	-122	-0.7
Refrigeration	0	0	0	0	0.0
Service Water	0	0	0	0	0.0
HVAC Equipment Losses	0	0	0	0	0.0
Adj Air Transfer Heat	0	0	0	0	0.0
Sizing Factor Correction	0	0	0	0	0.0
Time Delay Correction	0	-2166	0	-2166	-11.8
Grand Total	9320	6779	2199	18298	100.0

Engineering Checks

Cooling tons	1.52	Input Ventilation cfm	87
Cooling cfm	963.02	Calculated Ventilation cfm	141
ft²/ton	510.21	Number of People	8.00
cfm/ton	631.44	People per 1000 ft²	10
Conditioned ft²	777.9		

Conditions at Time of Heating Peak

Outside	DB / WB / HR	16.4 °F	/	12.6 °F	/	5.3 gr/lb
Room	DB / RH / HR	70.0 °F	/	4.9 %	/	5.2 gr/lb

	Instant Sensible (Btu/h)	Time Delay Sensible (Btu/h)	Latent (Btu/h)	Total (Btu/h)	Percent of Total (%)
Roof	0	0	0	0	0.0
Other Roof	0	0	0	0	0.0
Glass	-2975	0	0	-2975	57.1
Door	0	0	0	0	0.0
Wall	0	-276	0	-276	5.3
Below-Grade Wall	0	0	0	0	0.0
Other Wall	0	0	0	0	0.0
Partition	0	30	0	30	-0.6
Exterior Floor	0	0	0	0	0.0
Interior Floor	0	67	0	67	-1.3
Slab	0	0	0	0	0.0
Other Floor	0	0	0	0	0.0
Infiltration	0	0	0	0	0.0
Envelope Subtotal	-2975	-178	0	-3153	-
People	0	0	0	0	0.0
Lights	0	0	0	0	0.0
RA Sensible (Lights)	0	0	0	0	0.0
Miscellaneous Loads	0	0	0	0	0.0
Internal Subtotal	0	0	0	0	-
RA (All Other)	0	0	0	0	0.0
DOA Direct to Room	0	0	0	0	0.0
Ceiling	0	-2055	0	-2055	39.5
Refrigeration	0	0	0	0	0.0
Service Water	0	0	0	0	0.0
HVAC Equipment Losses	0	0	0	0	0.0
Adj Air Transfer Heat	0	0	0	0	0.0
Sizing Factor Correction	0	0	0	0	0.0
Time Delay Correction	0	0	0	0	0.0
Grand Total	-2975	-2233	0	-5208	100.0

Engineering Checks

Heating Mbh	-5.21	Input Ventilation cfm	87
Heating cfm	288.91	Calculated Ventilation cfm	76
ft²/Mbh	-149.37	Number of People	8.00
cfm/Mbh	-55.47	People per 1000 ft²	10
Conditioned ft²	777.9		

ROOM_02_211A_CORRIDOR_R04

Conditions at Time of Cooling Peak

Outside	DB / WB / HR	81.6 °F	/	71.3 °F	/	99.4 gr/lb
Room	DB / RH / HR	81.0 °F	/	39.9 %	/	62.8 gr/lb

	Instant Sensible (Btu/h)	Time Delay Sensible (Btu/h)	Latent (Btu/h)	Total (Btu/h)	Percent of Total (%)
Roof	0	0	0	0	0.0
Other Roof	0	0	0	0	0.0
Glass	322	1269	0	1591	154.8
Door	0	0	0	0	0.0
Wall	0	0	0	0	0.0
Below-Grade Wall	0	0	0	0	0.0
Other Wall	0	0	0	0	0.0
Partition	0	-352	0	-352	-34.2
Exterior Floor	0	0	0	0	0.0
Interior Floor	0	-275	0	-275	-26.7
Slab	0	0	0	0	0.0
Other Floor	0	0	0	0	0.0
Infiltration	0	0	0	0	0.0
Envelope Subtotal	322	643	0	965	-
People	0	0	0	0	0.0
Lights	77	165	0	242	23.5
RA Sensible (Lights)	88	0	0	88	8.6
Miscellaneous Loads	0	0	0	0	0.0
Internal Subtotal	165	165	0	330	-
RA (All Other)	0	0	0	0	0.0
DOA Direct to Room	0	0	0	0	0.0
Ceiling	0	-224	0	-224	-21.8
Refrigeration	0	0	0	0	0.0
Service Water	0	0	0	0	0.0
HVAC Equipment Losses	0	0	0	0	0.0
Adj Air Transfer Heat	0	0	0	0	0.0
Sizing Factor Correction	0	0	0	0	0.0
Time Delay Correction	0	-43	0	-43	-4.1
Grand Total	487	541	0	1028	100.0

Engineering Checks

Cooling tons	0.09	Input Ventilation cfm	8
Cooling cfm	84.23	Calculated Ventilation cfm	12
ft²/ton	1475.11	Number of People	0.00
cfm/ton	982.93	People per 1000 ft²	0
Conditioned ft²	126.4		

Conditions at Time of Heating Peak

Outside	DB / WB / HR	16.4 °F	/	12.6 °F	/	5.3 gr/lb
Room	DB / RH / HR	70.0 °F	/	4.9 %	/	5.2 gr/lb

	Instant Sensible (Btu/h)	Time Delay Sensible (Btu/h)	Latent (Btu/h)	Total (Btu/h)	Percent of Total (%)
Roof	0	0	0	0	0.0
Other Roof	0	0	0	0	0.0
Glass	-624	0	0	-624	123.1
Door	0	0	0	0	0.0
Wall	0	0	0	0	0.0
Below-Grade Wall	0	0	0	0	0.0
Other Wall	0	0	0	0	0.0
Partition	0	416	0	416	-82.0
Exterior Floor	0	0	0	0	0.0
Interior Floor	0	54	0	54	-10.7
Slab	0	0	0	0	0.0
Other Floor	0	0	0	0	0.0
Infiltration	0	0	0	0	0.0
Envelope Subtotal	-624	470	0	-154	-
People	0	0	0	0	0.0
Lights	0	0	0	0	0.0
RA Sensible (Lights)	0	0	0	0	0.0
Miscellaneous Loads	0	0	0	0	0.0
Internal Subtotal	0	0	0	0	-
RA (All Other)	0	0	0	0	0.0
DOA Direct to Room	0	0	0	0	0.0
Ceiling	0	-353	0	-353	69.6
Refrigeration	0	0	0	0	0.0
Service Water	0	0	0	0	0.0
HVAC Equipment Losses	0	0	0	0	0.0
Adj Air Transfer Heat	0	0	0	0	0.0
Sizing Factor Correction	0	0	0	0	0.0
Time Delay Correction	0	0	0	0	0.0
Grand Total	-624	117	0	-507	100.0

Engineering Checks

Heating Mbh	-0.51	Input Ventilation cfm	8
Heating cfm	25.27	Calculated Ventilation cfm	7
ft²/Mbh	-249.10	Number of People	0.00
cfm/Mbh	-49.81	People per 1000 ft²	0
Conditioned ft²	126.4		

ROOM_02_211A_OPEN OFFICE_R04

Conditions at Time of Cooling Peak

Outside	DB / WB / HR	90.7 °F	/	73.9 °F	/	99.5 gr/lb
Room	DB / RH / HR	75.0 °F	/	52.9 %	/	68.5 gr/lb

	Instant Sensible (Btu/h)	Time Delay Sensible (Btu/h)	Latent (Btu/h)	Total (Btu/h)	Percent of Total (%)
Roof	0	0	0	0	0.0
Other Roof	0	0	0	0	0.0
Glass	1469	1999	0	3469	23.1
Door	0	0	0	0	0.0
Wall	0	-65	0	-65	-0.4
Below-Grade Wall	0	0	0	0	0.0
Other Wall	0	0	0	0	0.0
Partition	0	-280	0	-280	-1.9
Exterior Floor	0	0	0	0	0.0
Interior Floor	0	-2082	0	-2082	-13.9
Slab	0	0	0	0	0.0
Other Floor	0	0	0	0	0.0
Infiltration	0	0	0	0	0.0
Envelope Subtotal	1469	-427	0	1042	-
People	924	1890	2199	5013	33.4
Lights	468	1027	0	1495	10.0
RA Sensible (Lights)	537	0	0	537	3.6
Miscellaneous Loads	4337	4653	0	8991	60.0
Internal Subtotal	6267	7570	2199	16036	-
RA (All Other)	0	0	0	0	0.0
DOA Direct to Room	0	0	0	0	0.0
Ceiling	0	-135	0	-135	-0.9
Refrigeration	0	0	0	0	0.0
Service Water	0	0	0	0	0.0
HVAC Equipment Losses	0	0	0	0	0.0
Adj Air Transfer Heat	0	0	0	0	0.0
Sizing Factor Correction	0	0	0	0	0.0
Time Delay Correction	0	-1956	0	-1956	-13.1
Grand Total	7736	5052	2199	14988	100.0

Engineering Checks

Cooling tons	1.25	Input Ventilation cfm	71
Cooling cfm	790.11	Calculated Ventilation cfm	115
ft²/ton	415.18	Number of People	8.00
cfm/ton	632.49	People per 1000 ft²	15
Conditioned ft²	518.5		

Conditions at Time of Heating Peak

Outside	DB / WB / HR	16.4 °F	/	12.6 °F	/	5.3 gr/lb
Room	DB / RH / HR	70.0 °F	/	4.9 %	/	5.2 gr/lb

	Instant Sensible (Btu/h)	Time Delay Sensible (Btu/h)	Latent (Btu/h)	Total (Btu/h)	Percent of Total (%)
Roof	0	0	0	0	0.0
Other Roof	0	0	0	0	0.0
Glass	-2645	0	0	-2645	59.9
Door	0	0	0	0	0.0
Wall	0	-267	0	-267	6.0
Below-Grade Wall	0	0	0	0	0.0
Other Wall	0	0	0	0	0.0
Partition	0	-32	0	-32	0.7
Exterior Floor	0	0	0	0	0.0
Interior Floor	0	-38	0	-38	0.9
Slab	0	0	0	0	0.0
Other Floor	0	0	0	0	0.0
Infiltration	0	0	0	0	0.0
Envelope Subtotal	-2645	-336	0	-2981	-
People	0	0	0	0	0.0
Lights	0	0	0	0	0.0
RA Sensible (Lights)	0	0	0	0	0.0
Miscellaneous Loads	0	0	0	0	0.0
Internal Subtotal	0	0	0	0	-
RA (All Other)	0	0	0	0	0.0
DOA Direct to Room	0	0	0	0	0.0
Ceiling	0	-1430	0	-1430	32.4
Refrigeration	0	0	0	0	0.0
Service Water	0	0	0	0	0.0
HVAC Equipment Losses	0	0	0	0	0.0
Adj Air Transfer Heat	0	0	0	0	0.0
Sizing Factor Correction	0	0	0	0	0.0
Time Delay Correction	0	0	0	0	0.0
Grand Total	-2645	-1767	0	-4412	100.0

Engineering Checks

Heating Mbh	-4.41	Input Ventilation cfm	71
Heating cfm	237.03	Calculated Ventilation cfm	62
ft²/Mbh	-117.54	Number of People	8.00
cfm/Mbh	-53.73	People per 1000 ft²	15
Conditioned ft²	518.5		

ROOM_02_211B_OPEN OFFICE_R04

Conditions at Time of Cooling Peak

Outside	DB / WB / HR	90.7 °F	/	73.9 °F	/	99.5 gr/lb
Room	DB / RH / HR	75.0 °F	/	51.4 %	/	66.4 gr/lb

	Instant Sensible (Btu/h)	Time Delay Sensible (Btu/h)	Latent (Btu/h)	Total (Btu/h)	Percent of Total (%)
Roof	0	0	0	0	0.0
Other Roof	0	0	0	0	0.0
Glass	2116	2143	0	4259	26.1
Door	0	0	0	0	0.0
Wall	0	-53	0	-53	-0.3
Below-Grade Wall	0	0	0	0	0.0
Other Wall	0	0	0	0	0.0
Partition	0	0	0	0	0.0
Exterior Floor	0	0	0	0	0.0
Interior Floor	0	-2211	0	-2211	-13.5
Slab	0	0	0	0	0.0
Other Floor	0	0	0	0	0.0
Infiltration	0	0	0	0	0.0
Envelope Subtotal	2116	-122	0	1994	-
People	840	1665	1600	4105	25.1
Lights	626	1300	0	1926	11.8
RA Sensible (Lights)	719	0	0	719	4.4
Miscellaneous Loads	4695	4880	0	9575	58.6
Internal Subtotal	6880	7844	1600	16324	-
RA (All Other)	0	0	0	0	0.0
DOA Direct to Room	0	0	0	0	0.0
Ceiling	0	218	0	218	1.3
Refrigeration	0	0	0	0	0.0
Service Water	0	0	0	0	0.0
HVAC Equipment Losses	0	0	0	0	0.0
Adj Air Transfer Heat	0	0	0	0	0.0
Sizing Factor Correction	0	0	0	0	0.0
Time Delay Correction	0	-2199	0	-2199	-13.5
Grand Total	8996	5741	1600	16337	100.0

Engineering Checks

Cooling tons	1.36	Input Ventilation cfm	82
Cooling cfm	906.77	Calculated Ventilation cfm	133
ft²/ton	509.46	Number of People	8.00
cfm/ton	665.92	People per 1000 ft²	12
Conditioned ft²	693.5		

Conditions at Time of Heating Peak

Outside	DB / WB / HR	16.4 °F	/	12.6 °F	/	5.3 gr/lb
Room	DB / RH / HR	70.0 °F	/	4.9 %	/	5.2 gr/lb

	Instant Sensible (Btu/h)	Time Delay Sensible (Btu/h)	Latent (Btu/h)	Total (Btu/h)	Percent of Total (%)
Roof	0	0	0	0	0.0
Other Roof	0	0	0	0	0.0
Glass	-2702	0	0	-2702	54.2
Door	0	0	0	0	0.0
Wall	0	-345	0	-345	6.9
Below-Grade Wall	0	0	0	0	0.0
Other Wall	0	0	0	0	0.0
Partition	0	1	0	1	0.0
Exterior Floor	0	0	0	0	0.0
Interior Floor	0	-8	0	-8	0.2
Slab	0	0	0	0	0.0
Other Floor	0	0	0	0	0.0
Infiltration	0	0	0	0	0.0
Envelope Subtotal	-2702	-352	0	-3054	-
People	0	0	0	0	0.0
Lights	0	0	0	0	0.0
RA Sensible (Lights)	0	0	0	0	0.0
Miscellaneous Loads	0	0	0	0	0.0
Internal Subtotal	0	0	0	0	-
RA (All Other)	0	0	0	0	0.0
DOA Direct to Room	0	0	0	0	0.0
Ceiling	0	-1934	0	-1934	38.8
Refrigeration	0	0	0	0	0.0
Service Water	0	0	0	0	0.0
HVAC Equipment Losses	0	0	0	0	0.0
Adj Air Transfer Heat	0	0	0	0	0.0
Sizing Factor Correction	0	0	0	0	0.0
Time Delay Correction	0	0	0	0	0.0
Grand Total	-2702	-2286	0	-4988	100.0

Engineering Checks

Heating Mbh	-4.99	Input Ventilation cfm	82
Heating cfm	272.03	Calculated Ventilation cfm	71
ft²/Mbh	-139.05	Number of People	8.00
cfm/Mbh	-54.53	People per 1000 ft²	12
Conditioned ft²	693.5		

ROOM_02_211C_OPEN OFFICE_R04

Conditions at Time of Cooling Peak

Outside	DB / WB / HR	79.2 °F	/	70.6 °F	/	99.4 gr/lb
Room	DB / RH / HR	75.0 °F	/	51.7 %	/	66.9 gr/lb

	Instant Sensible (Btu/h)	Time Delay Sensible (Btu/h)	Latent (Btu/h)	Total (Btu/h)	Percent of Total (%)
Roof	0	0	0	0	0.0
Other Roof	0	0	0	0	0.0
Glass	2835	8346	0	11181	55.7
Door	0	0	0	0	0.0
Wall	0	254	0	254	1.3
Below-Grade Wall	0	0	0	0	0.0
Other Wall	0	0	0	0	0.0
Partition	0	-256	0	-256	-1.3
Exterior Floor	0	0	0	0	0.0
Interior Floor	0	-3741	0	-3741	-18.6
Slab	0	0	0	0	0.0
Other Floor	0	0	0	0	0.0
Infiltration	0	0	0	0	0.0
Envelope Subtotal	2835	4603	0	7438	-
People	924	1490	2199	4613	23.0
Lights	581	1185	0	1766	8.8
RA Sensible (Lights)	667	0	0	667	3.3
Miscellaneous Loads	4593	4588	0	9181	45.8
Internal Subtotal	6764	7262	2199	16226	-
RA (All Other)	0	0	0	0	0.0
DOA Direct to Room	0	0	0	0	0.0
Ceiling	0	-1704	0	-1704	-8.5
Refrigeration	0	0	0	0	0.0
Service Water	0	0	0	0	0.0
HVAC Equipment Losses	0	0	0	0	0.0
Adj Air Transfer Heat	0	0	0	0	0.0
Sizing Factor Correction	0	0	0	0	0.0
Time Delay Correction	0	-1894	0	-1894	-9.4
Grand Total	9599	8268	2199	20066	100.0

Engineering Checks

Cooling tons	1.67	Input Ventilation cfm	79
Cooling cfm	873.26	Calculated Ventilation cfm	128
ft²/ton	384.71	Number of People	8.00
cfm/ton	522.12	People per 1000 ft²	12
Conditioned ft²	643.3		

Conditions at Time of Heating Peak

Outside	DB / WB / HR	16.4 °F	/	12.6 °F	/	5.3 gr/lb
Room	DB / RH / HR	70.0 °F	/	4.9 %	/	5.2 gr/lb

	Instant Sensible (Btu/h)	Time Delay Sensible (Btu/h)	Latent (Btu/h)	Total (Btu/h)	Percent of Total (%)
Roof	0	0	0	0	0.0
Other Roof	0	0	0	0	0.0
Glass	-2450	0	0	-2450	53.5
Door	0	0	0	0	0.0
Wall	0	-441	0	-441	9.6
Below-Grade Wall	0	0	0	0	0.0
Other Wall	0	0	0	0	0.0
Partition	0	27	0	27	-0.6
Exterior Floor	0	0	0	0	0.0
Interior Floor	0	71	0	71	-1.5
Slab	0	0	0	0	0.0
Other Floor	0	0	0	0	0.0
Infiltration	0	0	0	0	0.0
Envelope Subtotal	-2450	-343	0	-2793	-
People	0	0	0	0	0.0
Lights	0	0	0	0	0.0
RA Sensible (Lights)	0	0	0	0	0.0
Miscellaneous Loads	0	0	0	0	0.0
Internal Subtotal	0	0	0	0	-
RA (All Other)	0	0	0	0	0.0
DOA Direct to Room	0	0	0	0	0.0
Ceiling	0	-1787	0	-1787	39.0
Refrigeration	0	0	0	0	0.0
Service Water	0	0	0	0	0.0
HVAC Equipment Losses	0	0	0	0	0.0
Adj Air Transfer Heat	0	0	0	0	0.0
Sizing Factor Correction	0	0	0	0	0.0
Time Delay Correction	0	0	0	0	0.0
Grand Total	-2450	-2130	0	-4581	100.0

Engineering Checks

Heating Mbh	-4.58	Input Ventilation cfm	79
Heating cfm	261.98	Calculated Ventilation cfm	69
ft²/Mbh	-140.44	Number of People	8.00
cfm/Mbh	-57.19	People per 1000 ft²	12
Conditioned ft²	643.3		

ROOM_02_220_HUDDLE_R04

Conditions at Time of Cooling Peak

Outside	DB / WB / HR	87.8 °F	/	73.1 °F	/	99.5 gr/lb
Room	DB / RH / HR	75.0 °F	/	52.6 %	/	68.0 gr/lb

	Instant Sensible (Btu/h)	Time Delay Sensible (Btu/h)	Latent (Btu/h)	Total (Btu/h)	Percent of Total (%)
Roof	0	0	0	0	0.0
Other Roof	0	0	0	0	0.0
Glass	702	2432	0	3135	54.1
Door	0	-50	0	-50	-0.9
Wall	0	205	0	205	3.5
Below-Grade Wall	0	0	0	0	0.0
Other Wall	0	0	0	0	0.0
Partition	0	57	0	57	1.0
Exterior Floor	0	0	0	0	0.0
Interior Floor	0	-647	0	-647	-11.2
Slab	0	0	0	0	0.0
Other Floor	0	0	0	0	0.0
Infiltration	0	0	0	0	0.0
Envelope Subtotal	702	1998	0	2700	-
People	420	967	800	2187	37.7
Lights	117	324	0	441	7.6
RA Sensible (Lights)	134	0	0	134	2.3
Miscellaneous Loads	133	159	0	292	5.0
Internal Subtotal	804	1451	800	3055	-
RA (All Other)	0	0	0	0	0.0
DOA Direct to Room	0	0	0	0	0.0
Ceiling	0	81	0	81	1.4
Refrigeration	0	0	0	0	0.0
Service Water	0	0	0	0	0.0
HVAC Equipment Losses	0	0	0	0	0.0
Adj Air Transfer Heat	0	0	0	0	0.0
Sizing Factor Correction	0	0	0	0	0.0
Time Delay Correction	0	-41	0	-41	-0.7
Grand Total	1507	3489	800	5795	100.0

Engineering Checks

Cooling tons	0.48	Input Ventilation cfm	26
Cooling cfm	291.03	Calculated Ventilation cfm	43
ft²/ton	213.76	Number of People	4.00
cfm/ton	602.49	People per 1000 ft²	39
Conditioned ft²	103.2		

Conditions at Time of Heating Peak

Outside	DB / WB / HR	16.4 °F	/	12.6 °F	/	5.3 gr/lb
Room	DB / RH / HR	70.0 °F	/	4.9 %	/	5.2 gr/lb

	Instant Sensible (Btu/h)	Time Delay Sensible (Btu/h)	Latent (Btu/h)	Total (Btu/h)	Percent of Total (%)
Roof	0	0	0	0	0.0
Other Roof	0	0	0	0	0.0
Glass	-728	0	0	-728	51.6
Door	0	16	0	16	-1.1
Wall	0	-230	0	-230	16.3
Below-Grade Wall	0	0	0	0	0.0
Other Wall	0	0	0	0	0.0
Partition	0	-105	0	-105	7.4
Exterior Floor	0	0	0	0	0.0
Interior Floor	0	-46	0	-46	3.2
Slab	0	0	0	0	0.0
Other Floor	0	0	0	0	0.0
Infiltration	0	0	0	0	0.0
Envelope Subtotal	-728	-365	0	-1093	-
People	0	0	0	0	0.0
Lights	0	0	0	0	0.0
RA Sensible (Lights)	0	0	0	0	0.0
Miscellaneous Loads	0	0	0	0	0.0
Internal Subtotal	0	0	0	0	-
RA (All Other)	0	0	0	0	0.0
DOA Direct to Room	0	0	0	0	0.0
Ceiling	0	-319	0	-319	22.6
Refrigeration	0	0	0	0	0.0
Service Water	0	0	0	0	0.0
HVAC Equipment Losses	0	0	0	0	0.0
Adj Air Transfer Heat	0	0	0	0	0.0
Sizing Factor Correction	0	0	0	0	0.0
Time Delay Correction	0	0	0	0	0.0
Grand Total	-728	-684	0	-1412	100.0

Engineering Checks

Heating Mbh	-1.41	Input Ventilation cfm	26
Heating cfm	87.31	Calculated Ventilation cfm	23
ft²/Mbh	-73.13	Number of People	4.00
cfm/Mbh	-61.84	People per 1000 ft²	39
Conditioned ft²	103.2		

ROOM_02_220A_CORRIDOR_R04

Conditions at Time of Cooling Peak

Outside	DB / WB / HR	87.1 °F	/	72.9 °F	/	99.5 gr/lb
Room	DB / RH / HR	81.0 °F	/	39.9 %	/	62.8 gr/lb

	Instant Sensible (Btu/h)	Time Delay Sensible (Btu/h)	Latent (Btu/h)	Total (Btu/h)	Percent of Total (%)
Roof	0	0	0	0	0.0
Other Roof	0	0	0	0	0.0
Glass	-67	326	0	259	11.8
Door	0	111	0	111	5.0
Wall	0	0	0	0	0.0
Below-Grade Wall	0	0	0	0	0.0
Other Wall	0	0	0	0	0.0
Partition	0	989	0	989	45.0
Exterior Floor	0	0	0	0	0.0
Interior Floor	0	-152	0	-152	-6.9
Slab	0	0	0	0	0.0
Other Floor	0	0	0	0	0.0
Infiltration	0	0	0	0	0.0
Envelope Subtotal	-67	1273	0	1206	-
People	0	0	0	0	0.0
Lights	118	276	0	394	17.9
RA Sensible (Lights)	135	0	0	135	6.2
Miscellaneous Loads	0	0	0	0	0.0
Internal Subtotal	253	276	0	529	-
RA (All Other)	0	0	0	0	0.0
DOA Direct to Room	0	0	0	0	0.0
Ceiling	0	469	0	469	21.4
Refrigeration	0	0	0	0	0.0
Service Water	0	0	0	0	0.0
HVAC Equipment Losses	0	0	0	0	0.0
Adj Air Transfer Heat	0	0	0	0	0.0
Sizing Factor Correction	0	0	0	0	0.0
Time Delay Correction	0	-9	0	-9	-0.4
Grand Total	186	2009	0	2195	100.0

Engineering Checks

Cooling tons	0.18	Input Ventilation cfm	12
Cooling cfm	129.23	Calculated Ventilation cfm	19
ft²/ton	1059.88	Number of People	0.00
cfm/ton	706.33	People per 1000 ft²	0
Conditioned ft²	193.9		

Conditions at Time of Heating Peak

Outside	DB / WB / HR	16.4 °F	/	12.6 °F	/	5.3 gr/lb
Room	DB / RH / HR	70.0 °F	/	4.9 %	/	5.2 gr/lb

	Instant Sensible (Btu/h)	Time Delay Sensible (Btu/h)	Latent (Btu/h)	Total (Btu/h)	Percent of Total (%)
Roof	0	0	0	0	0.0
Other Roof	0	0	0	0	0.0
Glass	-92	0	0	-92	11.6
Door	0	9	0	9	-1.1
Wall	0	0	0	0	0.0
Below-Grade Wall	0	0	0	0	0.0
Other Wall	0	0	0	0	0.0
Partition	0	-144	0	-144	18.0
Exterior Floor	0	0	0	0	0.0
Interior Floor	0	-49	0	-49	6.2
Slab	0	0	0	0	0.0
Other Floor	0	0	0	0	0.0
Infiltration	0	0	0	0	0.0
Envelope Subtotal	-92	-184	0	-276	-
People	0	0	0	0	0.0
Lights	0	0	0	0	0.0
RA Sensible (Lights)	0	0	0	0	0.0
Miscellaneous Loads	0	0	0	0	0.0
Internal Subtotal	0	0	0	0	-
RA (All Other)	0	0	0	0	0.0
DOA Direct to Room	0	0	0	0	0.0
Ceiling	0	-521	0	-521	65.4
Refrigeration	0	0	0	0	0.0
Service Water	0	0	0	0	0.0
HVAC Equipment Losses	0	0	0	0	0.0
Adj Air Transfer Heat	0	0	0	0	0.0
Sizing Factor Correction	0	0	0	0	0.0
Time Delay Correction	0	0	0	0	0.0
Grand Total	-92	-705	0	-797	100.0

Engineering Checks

Heating Mbh	-0.80	Input Ventilation cfm	12
Heating cfm	38.77	Calculated Ventilation cfm	10
ft²/Mbh	-243.17	Number of People	0.00
cfm/Mbh	-48.63	People per 1000 ft²	0
Conditioned ft²	193.9		

ROOM_02_221_ELC

Conditions at Time of Cooling Peak

Outside	DB / WB / HR	86.4 °F	/	72.7 °F	/	99.5 gr/lb
Room	DB / RH / HR	81.0 °F	/	39.9 %	/	62.8 gr/lb

	Instant Sensible (Btu/h)	Time Delay Sensible (Btu/h)	Latent (Btu/h)	Total (Btu/h)	Percent of Total (%)
Roof	0	0	0	0	0.0
Other Roof	0	0	0	0	0.0
Glass	0	0	0	0	0.0
Door	0	-55	0	-55	-1.5
Wall	0	0	0	0	0.0
Below-Grade Wall	0	0	0	0	0.0
Other Wall	0	0	0	0	0.0
Partition	0	-1356	0	-1356	-37.0
Exterior Floor	0	0	0	0	0.0
Interior Floor	0	-503	0	-503	-13.7
Slab	0	0	0	0	0.0
Other Floor	0	0	0	0	0.0
Infiltration	0	0	0	0	0.0
Envelope Subtotal	0	-1913	0	-1913	-
People	0	0	0	0	0.0
Lights	40	128	0	169	4.6
RA Sensible (Lights)	46	0	0	46	1.3
Miscellaneous Loads	2362	3211	0	5573	152.1
Internal Subtotal	2449	3340	0	5788	-
RA (All Other)	0	0	0	0	0.0
DOA Direct to Room	0	0	0	0	0.0
Ceiling	0	-210	0	-210	-5.7
Refrigeration	0	0	0	0	0.0
Service Water	0	0	0	0	0.0
HVAC Equipment Losses	0	0	0	0	0.0
Adj Air Transfer Heat	0	0	0	0	0.0
Sizing Factor Correction	0	0	0	0	0.0
Time Delay Correction	0	0	0	0	0.0
Grand Total	2449	1216	0	3664	100.0

Engineering Checks

Cooling tons	0.31	Input Ventilation cfm	127
Cooling cfm	127.32	Calculated Ventilation cfm	0
ft²/ton	342.66	Number of People	0.00
cfm/ton	416.86	People per 1000 ft²	0
Conditioned ft²	104.6		

Conditions at Time of Heating Peak

Outside	DB / WB / HR	32.0 °F	/	32.0 °F	/	0.0 gr/lb
Room	DB / RH / HR	32.0 °F	/	0.0 %	/	0.0 gr/lb

	Instant Sensible (Btu/h)	Time Delay Sensible (Btu/h)	Latent (Btu/h)	Total (Btu/h)	Percent of Total (%)
Roof	0	0	0	0	0.0
Other Roof	0	0	0	0	0.0
Glass	0	0	0	0	0.0
Door	0	0	0	0	0.0
Wall	0	0	0	0	0.0
Below-Grade Wall	0	0	0	0	0.0
Other Wall	0	0	0	0	0.0
Partition	0	0	0	0	0.0
Exterior Floor	0	0	0	0	0.0
Interior Floor	0	0	0	0	0.0
Slab	0	0	0	0	0.0
Other Floor	0	0	0	0	0.0
Infiltration	0	0	0	0	0.0
Envelope Subtotal	0	0	0	0	-
People	0	0	0	0	0.0
Lights	0	0	0	0	0.0
RA Sensible (Lights)	0	0	0	0	0.0
Miscellaneous Loads	0	0	0	0	0.0
Internal Subtotal	0	0	0	0	-
RA (All Other)	0	0	0	0	0.0
DOA Direct to Room	0	0	0	0	0.0
Ceiling	0	0	0	0	0.0
Refrigeration	0	0	0	0	0.0
Service Water	0	0	0	0	0.0
HVAC Equipment Losses	0	0	0	0	0.0
Adj Air Transfer Heat	0	0	0	0	0.0
Sizing Factor Correction	0	0	0	0	0.0
Time Delay Correction	0	0	0	0	0.0
Grand Total	0	0	0	0	100.0

Engineering Checks

Heating Mbh	0.00	Input Ventilation cfm	127
Heating cfm	127.32	Calculated Ventilation cfm	0
ft²/Mbh	0.00	Number of People	0.00
cfm/Mbh	0.00	People per 1000 ft²	0
Conditioned ft²	104.6		

ROOM_02_223_LAN/IT RM_R04

Conditions at Time of Cooling Peak

Outside	DB / WB / HR	87.8 °F	/	73.1 °F	/	99.5 gr/lb
Room	DB / RH / HR	81.0 °F	/	39.9 %	/	62.8 gr/lb

	Instant Sensible (Btu/h)	Time Delay Sensible (Btu/h)	Latent (Btu/h)	Total (Btu/h)	Percent of Total (%)
Roof	0	0	0	0	0.0
Other Roof	0	0	0	0	0.0
Glass	0	0	0	0	0.0
Door	0	8	0	8	0.4
Wall	0	0	0	0	0.0
Below-Grade Wall	0	0	0	0	0.0
Other Wall	0	0	0	0	0.0
Partition	0	-500	0	-500	-28.6
Exterior Floor	0	0	0	0	0.0
Interior Floor	0	-233	0	-233	-13.4
Slab	0	0	0	0	0.0
Other Floor	0	0	0	0	0.0
Infiltration	0	0	0	0	0.0
Envelope Subtotal	0	-725	0	-725	-
People	0	0	0	0	0.0
Lights	214	457	0	671	38.4
RA Sensible (Lights)	245	0	0	245	14.1
Miscellaneous Loads	475	435	0	910	52.2
Internal Subtotal	934	892	0	1826	-
RA (All Other)	0	0	0	0	0.0
DOA Direct to Room	0	0	0	0	0.0
Ceiling	0	644	0	644	36.9
Refrigeration	0	0	0	0	0.0
Service Water	0	0	0	0	0.0
HVAC Equipment Losses	0	0	0	0	0.0
Adj Air Transfer Heat	0	0	0	0	0.0
Sizing Factor Correction	0	0	0	0	0.0
Time Delay Correction	0	0	0	0	0.0
Grand Total	934	810	0	1744	100.0

Engineering Checks

Cooling tons	0.15	Input Ventilation cfm	74
Cooling cfm	73.61	Calculated Ventilation cfm	22
ft²/ton	2532.32	Number of People	0.00
cfm/ton	506.37	People per 1000 ft²	0
Conditioned ft²	368.0		

Conditions at Time of Heating Peak

Outside	DB / WB / HR	16.4 °F	/	12.6 °F	/	5.3 gr/lb
Room	DB / RH / HR	70.0 °F	/	4.9 %	/	5.2 gr/lb

	Instant Sensible (Btu/h)	Time Delay Sensible (Btu/h)	Latent (Btu/h)	Total (Btu/h)	Percent of Total (%)
Roof	0	0	0	0	0.0
Other Roof	0	0	0	0	0.0
Glass	0	0	0	0	0.0
Door	0	-5	0	-5	0.9
Wall	0	0	0	0	0.0
Below-Grade Wall	0	0	0	0	0.0
Other Wall	0	0	0	0	0.0
Partition	0	183	0	183	-31.9
Exterior Floor	0	0	0	0	0.0
Interior Floor	0	177	0	177	-30.7
Slab	0	0	0	0	0.0
Other Floor	0	0	0	0	0.0
Infiltration	0	0	0	0	0.0
Envelope Subtotal	0	354	0	354	-
People	0	0	0	0	0.0
Lights	0	0	0	0	0.0
RA Sensible (Lights)	0	0	0	0	0.0
Miscellaneous Loads	0	0	0	0	0.0
Internal Subtotal	0	0	0	0	-
RA (All Other)	0	0	0	0	0.0
DOA Direct to Room	0	0	0	0	0.0
Ceiling	0	-929	0	-929	161.7
Refrigeration	0	0	0	0	0.0
Service Water	0	0	0	0	0.0
HVAC Equipment Losses	0	0	0	0	0.0
Adj Air Transfer Heat	0	0	0	0	0.0
Sizing Factor Correction	0	0	0	0	0.0
Time Delay Correction	0	0	0	0	0.0
Grand Total	0	-574	0	-574	100.0

Engineering Checks

Heating Mbh	-0.57	Input Ventilation cfm	74
Heating cfm	73.61	Calculated Ventilation cfm	22
ft²/Mbh	-640.84	Number of People	0.00
cfm/Mbh	-128.17	People per 1000 ft²	0
Conditioned ft²	368.0		

ROOM_02_224_OFFICE_R04

Conditions at Time of Cooling Peak

Outside	DB / WB / HR	87.8 °F	/	73.1 °F	/	99.5 gr/lb
Room	DB / RH / HR	75.0 °F	/	50.4 %	/	65.2 gr/lb

	Instant Sensible (Btu/h)	Time Delay Sensible (Btu/h)	Latent (Btu/h)	Total (Btu/h)	Percent of Total (%)
Roof	0	0	0	0	0.0
Other Roof	0	0	0	0	0.0
Glass	0	0	0	0	0.0
Door	0	-12	0	-12	-0.4
Wall	0	0	0	0	0.0
Below-Grade Wall	0	0	0	0	0.0
Other Wall	0	0	0	0	0.0
Partition	0	-115	0	-115	-3.7
Exterior Floor	0	0	0	0	0.0
Interior Floor	0	-152	0	-152	-4.9
Slab	0	0	0	0	0.0
Other Floor	0	0	0	0	0.0
Infiltration	0	0	0	0	0.0
Envelope Subtotal	0	-278	0	-278	-
People	105	272	200	577	18.8
Lights	160	505	0	665	21.7
RA Sensible (Lights)	184	0	0	184	6.0
Miscellaneous Loads	730	986	0	1716	56.0
Internal Subtotal	1180	1763	200	3143	-
RA (All Other)	0	0	0	0	0.0
DOA Direct to Room	0	0	0	0	0.0
Ceiling	0	204	0	204	6.7
Refrigeration	0	0	0	0	0.0
Service Water	0	0	0	0	0.0
HVAC Equipment Losses	0	0	0	0	0.0
Adj Air Transfer Heat	0	0	0	0	0.0
Sizing Factor Correction	0	0	0	0	0.0
Time Delay Correction	0	-2	0	-2	-0.1
Grand Total	1180	1687	200	3067	100.0

Engineering Checks

Cooling tons	0.26	Input Ventilation cfm	14
Cooling cfm	160.10	Calculated Ventilation cfm	23
ft²/ton	613.68	Number of People	1.00
cfm/ton	626.28	People per 1000 ft²	6
Conditioned ft²	156.8		

Conditions at Time of Heating Peak

Outside	DB / WB / HR	16.4 °F	/	12.6 °F	/	5.3 gr/lb
Room	DB / RH / HR	70.0 °F	/	4.9 %	/	5.2 gr/lb

	Instant Sensible (Btu/h)	Time Delay Sensible (Btu/h)	Latent (Btu/h)	Total (Btu/h)	Percent of Total (%)
Roof	0	0	0	0	0.0
Other Roof	0	0	0	0	0.0
Glass	0	0	0	0	0.0
Door	0	-11	0	-11	19.3
Wall	0	0	0	0	0.0
Below-Grade Wall	0	0	0	0	0.0
Other Wall	0	0	0	0	0.0
Partition	0	271	0	271	-472.7
Exterior Floor	0	0	0	0	0.0
Interior Floor	0	92	0	92	-159.7
Slab	0	0	0	0	0.0
Other Floor	0	0	0	0	0.0
Infiltration	0	0	0	0	0.0
Envelope Subtotal	0	352	0	352	-
People	0	0	0	0	0.0
Lights	0	0	0	0	0.0
RA Sensible (Lights)	0	0	0	0	0.0
Miscellaneous Loads	0	0	0	0	0.0
Internal Subtotal	0	0	0	0	-
RA (All Other)	0	0	0	0	0.0
DOA Direct to Room	0	0	0	0	0.0
Ceiling	0	-409	0	-409	713.1
Refrigeration	0	0	0	0	0.0
Service Water	0	0	0	0	0.0
HVAC Equipment Losses	0	0	0	0	0.0
Adj Air Transfer Heat	0	0	0	0	0.0
Sizing Factor Correction	0	0	0	0	0.0
Time Delay Correction	0	0	0	0	0.0
Grand Total	0	-57	0	-57	100.0

Engineering Checks

Heating Mbh	-0.06	Input Ventilation cfm	14
Heating cfm	48.03	Calculated Ventilation cfm	13
ft²/Mbh	-2732.22	Number of People	1.00
cfm/Mbh	-836.65	People per 1000 ft²	6
Conditioned ft²	156.8		

ROOM_02_225_OFFICE_R04

Conditions at Time of Cooling Peak

Outside	DB / WB / HR	87.8 °F	/	73.1 °F	/	99.5 gr/lb
Room	DB / RH / HR	75.0 °F	/	50.6 %	/	65.4 gr/lb

	Instant Sensible (Btu/h)	Time Delay Sensible (Btu/h)	Latent (Btu/h)	Total (Btu/h)	Percent of Total (%)
Roof	0	0	0	0	0.0
Other Roof	0	0	0	0	0.0
Glass	0	0	0	0	0.0
Door	0	-10	0	-10	-0.4
Wall	0	0	0	0	0.0
Below-Grade Wall	0	0	0	0	0.0
Other Wall	0	0	0	0	0.0
Partition	0	-307	0	-307	-11.0
Exterior Floor	0	0	0	0	0.0
Interior Floor	0	-171	0	-171	-6.1
Slab	0	0	0	0	0.0
Other Floor	0	0	0	0	0.0
Infiltration	0	0	0	0	0.0
Envelope Subtotal	0	-488	0	-488	-
People	105	273	200	578	20.8
Lights	154	487	0	641	23.0
RA Sensible (Lights)	177	0	0	177	6.4
Miscellaneous Loads	718	972	0	1691	60.7
Internal Subtotal	1154	1733	200	3087	-
RA (All Other)	0	0	0	0	0.0
DOA Direct to Room	0	0	0	0	0.0
Ceiling	0	189	0	189	6.8
Refrigeration	0	0	0	0	0.0
Service Water	0	0	0	0	0.0
HVAC Equipment Losses	0	0	0	0	0.0
Adj Air Transfer Heat	0	0	0	0	0.0
Sizing Factor Correction	0	0	0	0	0.0
Time Delay Correction	0	-2	0	-2	-0.1
Grand Total	1154	1432	200	2787	100.0

Engineering Checks

Cooling tons	0.23	Input Ventilation cfm	14
Cooling cfm	156.07	Calculated Ventilation cfm	23
ft²/ton	649.44	Number of People	1.00
cfm/ton	671.94	People per 1000 ft²	7
Conditioned ft²	150.8		

Conditions at Time of Heating Peak

Outside	DB / WB / HR	16.4 °F	/	12.6 °F	/	5.3 gr/lb
Room	DB / RH / HR	70.0 °F	/	4.9 %	/	5.2 gr/lb

	Instant Sensible (Btu/h)	Time Delay Sensible (Btu/h)	Latent (Btu/h)	Total (Btu/h)	Percent of Total (%)
Roof	0	0	0	0	0.0
Other Roof	0	0	0	0	0.0
Glass	0	0	0	0	0.0
Door	0	-6	0	-6	2.1
Wall	0	0	0	0	0.0
Below-Grade Wall	0	0	0	0	0.0
Other Wall	0	0	0	0	0.0
Partition	0	5	0	5	-1.7
Exterior Floor	0	0	0	0	0.0
Interior Floor	0	97	0	97	-33.1
Slab	0	0	0	0	0.0
Other Floor	0	0	0	0	0.0
Infiltration	0	0	0	0	0.0
Envelope Subtotal	0	96	0	96	-
People	0	0	0	0	0.0
Lights	0	0	0	0	0.0
RA Sensible (Lights)	0	0	0	0	0.0
Miscellaneous Loads	0	0	0	0	0.0
Internal Subtotal	0	0	0	0	-
RA (All Other)	0	0	0	0	0.0
DOA Direct to Room	0	0	0	0	0.0
Ceiling	0	-390	0	-390	132.7
Refrigeration	0	0	0	0	0.0
Service Water	0	0	0	0	0.0
HVAC Equipment Losses	0	0	0	0	0.0
Adj Air Transfer Heat	0	0	0	0	0.0
Sizing Factor Correction	0	0	0	0	0.0
Time Delay Correction	0	0	0	0	0.0
Grand Total	0	-294	0	-294	100.0

Engineering Checks

Heating Mbh	-0.29	Input Ventilation cfm	14
Heating cfm	46.82	Calculated Ventilation cfm	12
ft²/Mbh	-513.70	Number of People	1.00
cfm/Mbh	-159.48	People per 1000 ft²	7
Conditioned ft²	150.8		

ROOM_02_226_OFFICE_R04

Conditions at Time of Cooling Peak

Outside	DB / WB / HR	87.8 °F	/	73.1 °F	/	99.5 gr/lb
Room	DB / RH / HR	75.0 °F	/	50.7 %	/	65.5 gr/lb

	Instant Sensible (Btu/h)	Time Delay Sensible (Btu/h)	Latent (Btu/h)	Total (Btu/h)	Percent of Total (%)
Roof	0	0	0	0	0.0
Other Roof	0	0	0	0	0.0
Glass	0	0	0	0	0.0
Door	0	-4	0	-4	-0.1
Wall	0	0	0	0	0.0
Below-Grade Wall	0	0	0	0	0.0
Other Wall	0	0	0	0	0.0
Partition	0	-306	0	-306	-11.2
Exterior Floor	0	0	0	0	0.0
Interior Floor	0	-169	0	-169	-6.2
Slab	0	0	0	0	0.0
Other Floor	0	0	0	0	0.0
Infiltration	0	0	0	0	0.0
Envelope Subtotal	0	-478	0	-478	-
People	105	279	200	584	21.5
Lights	145	468	0	613	22.6
RA Sensible (Lights)	167	0	0	167	6.1
Miscellaneous Loads	700	967	0	1667	61.3
Internal Subtotal	1117	1714	200	3031	-
RA (All Other)	0	0	0	0	0.0
DOA Direct to Room	0	0	0	0	0.0
Ceiling	0	166	0	166	6.1
Refrigeration	0	0	0	0	0.0
Service Water	0	0	0	0	0.0
HVAC Equipment Losses	0	0	0	0	0.0
Adj Air Transfer Heat	0	0	0	0	0.0
Sizing Factor Correction	0	0	0	0	0.0
Time Delay Correction	0	-2	0	-2	-0.1
Grand Total	1117	1400	200	2717	100.0

Engineering Checks

Cooling tons	0.23	Input Ventilation cfm	14
Cooling cfm	150.25	Calculated Ventilation cfm	22
ft²/ton	627.54	Number of People	1.00
cfm/ton	663.40	People per 1000 ft²	7
Conditioned ft²	142.1		

Conditions at Time of Heating Peak

Outside	DB / WB / HR	16.4 °F	/	12.6 °F	/	5.3 gr/lb
Room	DB / RH / HR	70.0 °F	/	4.9 %	/	5.2 gr/lb

	Instant Sensible (Btu/h)	Time Delay Sensible (Btu/h)	Latent (Btu/h)	Total (Btu/h)	Percent of Total (%)
Roof	0	0	0	0	0.0
Other Roof	0	0	0	0	0.0
Glass	0	0	0	0	0.0
Door	0	-6	0	-6	1.8
Wall	0	0	0	0	0.0
Below-Grade Wall	0	0	0	0	0.0
Other Wall	0	0	0	0	0.0
Partition	0	-21	0	-21	7.0
Exterior Floor	0	0	0	0	0.0
Interior Floor	0	98	0	98	-32.7
Slab	0	0	0	0	0.0
Other Floor	0	0	0	0	0.0
Infiltration	0	0	0	0	0.0
Envelope Subtotal	0	72	0	72	-
People	0	0	0	0	0.0
Lights	0	0	0	0	0.0
RA Sensible (Lights)	0	0	0	0	0.0
Miscellaneous Loads	0	0	0	0	0.0
Internal Subtotal	0	0	0	0	-
RA (All Other)	0	0	0	0	0.0
DOA Direct to Room	0	0	0	0	0.0
Ceiling	0	-373	0	-373	123.9
Refrigeration	0	0	0	0	0.0
Service Water	0	0	0	0	0.0
HVAC Equipment Losses	0	0	0	0	0.0
Adj Air Transfer Heat	0	0	0	0	0.0
Sizing Factor Correction	0	0	0	0	0.0
Time Delay Correction	0	0	0	0	0.0
Grand Total	0	-301	0	-301	100.0

Engineering Checks

Heating Mbh	-0.30	Input Ventilation cfm	14
Heating cfm	45.07	Calculated Ventilation cfm	12
ft²/Mbh	-472.47	Number of People	1.00
cfm/Mbh	-149.87	People per 1000 ft²	7
Conditioned ft²	142.1		

ROOM_02_227_OFFICE_R04

Conditions at Time of Cooling Peak

Outside	DB / WB / HR	87.8 °F	/	73.1 °F	/	99.5 gr/lb
Room	DB / RH / HR	75.0 °F	/	50.6 %	/	65.4 gr/lb

	Instant Sensible (Btu/h)	Time Delay Sensible (Btu/h)	Latent (Btu/h)	Total (Btu/h)	Percent of Total (%)
Roof	0	0	0	0	0.0
Other Roof	0	0	0	0	0.0
Glass	0	0	0	0	0.0
Door	0	-5	0	-5	-0.2
Wall	0	0	0	0	0.0
Below-Grade Wall	0	0	0	0	0.0
Other Wall	0	0	0	0	0.0
Partition	0	-282	0	-282	-9.9
Exterior Floor	0	0	0	0	0.0
Interior Floor	0	-186	0	-186	-6.6
Slab	0	0	0	0	0.0
Other Floor	0	0	0	0	0.0
Infiltration	0	0	0	0	0.0
Envelope Subtotal	0	-473	0	-473	-
People	105	288	200	593	20.9
Lights	151	502	0	653	23.0
RA Sensible (Lights)	173	0	0	173	6.1
Miscellaneous Loads	712	1014	0	1726	60.8
Internal Subtotal	1141	1805	200	3145	-
RA (All Other)	0	0	0	0	0.0
DOA Direct to Room	0	0	0	0	0.0
Ceiling	0	168	0	168	5.9
Refrigeration	0	0	0	0	0.0
Service Water	0	0	0	0	0.0
HVAC Equipment Losses	0	0	0	0	0.0
Adj Air Transfer Heat	0	0	0	0	0.0
Sizing Factor Correction	0	0	0	0	0.0
Time Delay Correction	0	-2	0	-2	-0.1
Grand Total	1141	1498	200	2839	100.0

Engineering Checks

Cooling tons	0.24	Input Ventilation cfm	14
Cooling cfm	153.97	Calculated Ventilation cfm	23
ft²/ton	624.22	Number of People	1.00
cfm/ton	650.63	People per 1000 ft²	7
Conditioned ft²	147.7		

Conditions at Time of Heating Peak

Outside	DB / WB / HR	16.4 °F	/	12.6 °F	/	5.3 gr/lb
Room	DB / RH / HR	70.0 °F	/	4.9 %	/	5.2 gr/lb

	Instant Sensible (Btu/h)	Time Delay Sensible (Btu/h)	Latent (Btu/h)	Total (Btu/h)	Percent of Total (%)
Roof	0	0	0	0	0.0
Other Roof	0	0	0	0	0.0
Glass	0	0	0	0	0.0
Door	0	-5	0	-5	1.7
Wall	0	0	0	0	0.0
Below-Grade Wall	0	0	0	0	0.0
Other Wall	0	0	0	0	0.0
Partition	0	-20	0	-20	6.2
Exterior Floor	0	0	0	0	0.0
Interior Floor	0	103	0	103	-32.7
Slab	0	0	0	0	0.0
Other Floor	0	0	0	0	0.0
Infiltration	0	0	0	0	0.0
Envelope Subtotal	0	78	0	78	-
People	0	0	0	0	0.0
Lights	0	0	0	0	0.0
RA Sensible (Lights)	0	0	0	0	0.0
Miscellaneous Loads	0	0	0	0	0.0
Internal Subtotal	0	0	0	0	-
RA (All Other)	0	0	0	0	0.0
DOA Direct to Room	0	0	0	0	0.0
Ceiling	0	-391	0	-391	124.7
Refrigeration	0	0	0	0	0.0
Service Water	0	0	0	0	0.0
HVAC Equipment Losses	0	0	0	0	0.0
Adj Air Transfer Heat	0	0	0	0	0.0
Sizing Factor Correction	0	0	0	0	0.0
Time Delay Correction	0	0	0	0	0.0
Grand Total	0	-314	0	-314	100.0

Engineering Checks

Heating Mbh	-0.31	Input Ventilation cfm	14
Heating cfm	46.19	Calculated Ventilation cfm	12
ft²/Mbh	-470.50	Number of People	1.00
cfm/Mbh	-147.15	People per 1000 ft²	7
Conditioned ft²	147.7		

ROOM_02_230A_CORRIDOR_R03

Conditions at Time of Cooling Peak

Outside	DB / WB / HR	74.4 °F	/	62.3 °F	/	65.2 gr/lb
Room	DB / RH / HR	81.0 °F	/	39.9 %	/	62.8 gr/lb

	Instant Sensible (Btu/h)	Time Delay Sensible (Btu/h)	Latent (Btu/h)	Total (Btu/h)	Percent of Total (%)
Roof	0	0	0	0	0.0
Other Roof	0	0	0	0	0.0
Glass	416	1649	0	2065	179.5
Door	0	-114	0	-114	-9.9
Wall	0	0	0	0	0.0
Below-Grade Wall	0	0	0	0	0.0
Other Wall	0	0	0	0	0.0
Partition	0	-526	0	-526	-45.7
Exterior Floor	0	0	0	0	0.0
Interior Floor	0	-448	0	-448	-38.9
Slab	0	0	0	0	0.0
Other Floor	0	0	0	0	0.0
Infiltration	0	0	0	0	0.0
Envelope Subtotal	416	561	0	977	-
People	0	0	0	0	0.0
Lights	90	196	0	287	24.9
RA Sensible (Lights)	104	0	0	104	9.0
Miscellaneous Loads	0	0	0	0	0.0
Internal Subtotal	194	196	0	390	-
RA (All Other)	0	0	0	0	0.0
DOA Direct to Room	0	0	0	0	0.0
Ceiling	0	-180	0	-180	-15.6
Refrigeration	0	0	0	0	0.0
Service Water	0	0	0	0	0.0
HVAC Equipment Losses	0	0	0	0	0.0
Adj Air Transfer Heat	0	0	0	0	0.0
Sizing Factor Correction	0	0	0	0	0.0
Time Delay Correction	0	-37	0	-37	-3.2
Grand Total	610	541	0	1151	100.0

Engineering Checks

Cooling tons	0.10	Input Ventilation cfm	9
Cooling cfm	99.01	Calculated Ventilation cfm	13
ft²/ton	1548.99	Number of People	0.00
cfm/ton	1,032.14	People per 1000 ft²	0
Conditioned ft²	148.5		

Conditions at Time of Heating Peak

Outside	DB / WB / HR	16.4 °F	/	12.6 °F	/	5.3 gr/lb
Room	DB / RH / HR	70.0 °F	/	4.9 %	/	5.2 gr/lb

	Instant Sensible (Btu/h)	Time Delay Sensible (Btu/h)	Latent (Btu/h)	Total (Btu/h)	Percent of Total (%)
Roof	0	0	0	0	0.0
Other Roof	0	0	0	0	0.0
Glass	-342	0	0	-342	50.3
Door	0	11	0	11	-1.6
Wall	0	0	0	0	0.0
Below-Grade Wall	0	0	0	0	0.0
Other Wall	0	0	0	0	0.0
Partition	0	53	0	53	-7.8
Exterior Floor	0	0	0	0	0.0
Interior Floor	0	23	0	23	-3.4
Slab	0	0	0	0	0.0
Other Floor	0	0	0	0	0.0
Infiltration	0	0	0	0	0.0
Envelope Subtotal	-342	88	0	-254	-
People	0	0	0	0	0.0
Lights	0	0	0	0	0.0
RA Sensible (Lights)	0	0	0	0	0.0
Miscellaneous Loads	0	0	0	0	0.0
Internal Subtotal	0	0	0	0	-
RA (All Other)	0	0	0	0	0.0
DOA Direct to Room	0	0	0	0	0.0
Ceiling	0	-426	0	-426	62.6
Refrigeration	0	0	0	0	0.0
Service Water	0	0	0	0	0.0
HVAC Equipment Losses	0	0	0	0	0.0
Adj Air Transfer Heat	0	0	0	0	0.0
Sizing Factor Correction	0	0	0	0	0.0
Time Delay Correction	0	0	0	0	0.0
Grand Total	-342	-338	0	-680	100.0

Engineering Checks

Heating Mbh	-0.68	Input Ventilation cfm	9
Heating cfm	29.70	Calculated Ventilation cfm	8
ft²/Mbh	-218.37	Number of People	0.00
cfm/Mbh	-43.66	People per 1000 ft²	0
Conditioned ft²	148.5		

ROOM_02_230A_OPEN OFFICE_R03

Conditions at Time of Cooling Peak

Outside	DB / WB / HR	83.7 °F	/	68.4 °F	/	80.3 gr/lb
Room	DB / RH / HR	75.0 °F	/	50.9 %	/	65.8 gr/lb

	Instant Sensible (Btu/h)	Time Delay Sensible (Btu/h)	Latent (Btu/h)	Total (Btu/h)	Percent of Total (%)
Roof	0	0	0	0	0.0
Other Roof	0	0	0	0	0.0
Glass	5278	21033	0	26311	72.6
Door	0	0	0	0	0.0
Wall	0	88	0	88	0.2
Below-Grade Wall	0	0	0	0	0.0
Other Wall	0	0	0	0	0.0
Partition	0	0	0	0	0.0
Exterior Floor	0	0	0	0	0.0
Interior Floor	0	-8859	0	-8859	-24.4
Slab	0	0	0	0	0.0
Other Floor	0	0	0	0	0.0
Infiltration	0	0	0	0	0.0
Envelope Subtotal	5278	12262	0	17540	-
People	1270	2481	3024	6775	18.7
Lights	764	1566	0	2330	6.4
RA Sensible (Lights)	877	0	0	877	2.4
Miscellaneous Loads	6237	6105	0	12342	34.1
Internal Subtotal	9149	10152	3024	22325	-
RA (All Other)	0	0	0	0	0.0
DOA Direct to Room	0	0	0	0	0.0
Ceiling	0	-1339	0	-1339	-3.7
Refrigeration	0	0	0	0	0.0
Service Water	0	0	0	0	0.0
HVAC Equipment Losses	0	0	0	0	0.0
Adj Air Transfer Heat	0	0	0	0	0.0
Sizing Factor Correction	0	0	0	0	0.0
Time Delay Correction	0	-2283	0	-2283	-6.3
Grand Total	14427	18791	3024	36242	100.0

Engineering Checks

Cooling tons	3.02	Input Ventilation cfm	106
Cooling cfm	1,480.48	Calculated Ventilation cfm	188
ft²/ton	280.30	Number of People	11.00
cfm/ton	490.10	People per 1000 ft²	13
Conditioned ft²	846.5		

Conditions at Time of Heating Peak

Outside	DB / WB / HR	16.4 °F	/	12.6 °F	/	5.3 gr/lb
Room	DB / RH / HR	70.0 °F	/	4.9 %	/	5.2 gr/lb

	Instant Sensible (Btu/h)	Time Delay Sensible (Btu/h)	Latent (Btu/h)	Total (Btu/h)	Percent of Total (%)
Roof	0	0	0	0	0.0
Other Roof	0	0	0	0	0.0
Glass	-6915	0	0	-6915	68.9
Door	0	0	0	0	0.0
Wall	0	-617	0	-617	6.2
Below-Grade Wall	0	0	0	0	0.0
Other Wall	0	0	0	0	0.0
Partition	0	0	0	0	0.0
Exterior Floor	0	0	0	0	0.0
Interior Floor	0	-82	0	-82	0.8
Slab	0	0	0	0	0.0
Other Floor	0	0	0	0	0.0
Infiltration	0	0	0	0	0.0
Envelope Subtotal	-6915	-699	0	-7614	-
People	0	0	0	0	0.0
Lights	0	0	0	0	0.0
RA Sensible (Lights)	0	0	0	0	0.0
Miscellaneous Loads	0	0	0	0	0.0
Internal Subtotal	0	0	0	0	-
RA (All Other)	0	0	0	0	0.0
DOA Direct to Room	0	0	0	0	0.0
Ceiling	0	-2416	0	-2416	24.1
Refrigeration	0	0	0	0	0.0
Service Water	0	0	0	0	0.0
HVAC Equipment Losses	0	0	0	0	0.0
Adj Air Transfer Heat	0	0	0	0	0.0
Sizing Factor Correction	0	0	0	0	0.0
Time Delay Correction	0	0	0	0	0.0
Grand Total	-6915	-3115	0	-10030	100.0

Engineering Checks

Heating Mbh	-10.03	Input Ventilation cfm	106
Heating cfm	444.14	Calculated Ventilation cfm	126
ft²/Mbh	-84.40	Number of People	11.00
cfm/Mbh	-44.28	People per 1000 ft²	13
Conditioned ft²	846.5		

ROOM_02_230B_CORRIDOR_R03

Conditions at Time of Cooling Peak

Outside	DB / WB / HR	83.8 °F	/	68.5 °F	/	80.3 gr/lb
Room	DB / RH / HR	81.0 °F	/	39.9 %	/	62.8 gr/lb

	Instant Sensible (Btu/h)	Time Delay Sensible (Btu/h)	Latent (Btu/h)	Total (Btu/h)	Percent of Total (%)
Roof	0	0	0	0	0.0
Other Roof	0	0	0	0	0.0
Glass	402	1327	0	1729	156.5
Door	0	0	0	0	0.0
Wall	0	0	0	0	0.0
Below-Grade Wall	0	0	0	0	0.0
Other Wall	0	0	0	0	0.0
Partition	0	-493	0	-493	-44.6
Exterior Floor	0	0	0	0	0.0
Interior Floor	0	-313	0	-313	-28.3
Slab	0	0	0	0	0.0
Other Floor	0	0	0	0	0.0
Infiltration	0	0	0	0	0.0
Envelope Subtotal	402	521	0	923	-
People	0	0	0	0	0.0
Lights	84	174	0	258	23.3
RA Sensible (Lights)	97	0	0	97	8.8
Miscellaneous Loads	0	0	0	0	0.0
Internal Subtotal	181	174	0	355	-
RA (All Other)	0	0	0	0	0.0
DOA Direct to Room	0	0	0	0	0.0
Ceiling	0	-127	0	-127	-11.5
Refrigeration	0	0	0	0	0.0
Service Water	0	0	0	0	0.0
HVAC Equipment Losses	0	0	0	0	0.0
Adj Air Transfer Heat	0	0	0	0	0.0
Sizing Factor Correction	0	0	0	0	0.0
Time Delay Correction	0	-47	0	-47	-4.2
Grand Total	584	521	0	1105	100.0

Engineering Checks

Cooling tons	0.09	Input Ventilation cfm	8
Cooling cfm	92.61	Calculated Ventilation cfm	12
ft²/ton	1509.14	Number of People	0.00
cfm/ton	1,005.41	People per 1000 ft²	0
Conditioned ft²	139.0		

Conditions at Time of Heating Peak

Outside	DB / WB / HR	16.4 °F	/	12.6 °F	/	5.3 gr/lb
Room	DB / RH / HR	70.0 °F	/	4.9 %	/	5.2 gr/lb

	Instant Sensible (Btu/h)	Time Delay Sensible (Btu/h)	Latent (Btu/h)	Total (Btu/h)	Percent of Total (%)
Roof	0	0	0	0	0.0
Other Roof	0	0	0	0	0.0
Glass	-383	0	0	-383	52.1
Door	0	0	0	0	0.0
Wall	0	0	0	0	0.0
Below-Grade Wall	0	0	0	0	0.0
Other Wall	0	0	0	0	0.0
Partition	0	51	0	51	-6.9
Exterior Floor	0	0	0	0	0.0
Interior Floor	0	-3	0	-3	0.5
Slab	0	0	0	0	0.0
Other Floor	0	0	0	0	0.0
Infiltration	0	0	0	0	0.0
Envelope Subtotal	-383	47	0	-336	-
People	0	0	0	0	0.0
Lights	0	0	0	0	0.0
RA Sensible (Lights)	0	0	0	0	0.0
Miscellaneous Loads	0	0	0	0	0.0
Internal Subtotal	0	0	0	0	-
RA (All Other)	0	0	0	0	0.0
DOA Direct to Room	0	0	0	0	0.0
Ceiling	0	-399	0	-399	54.3
Refrigeration	0	0	0	0	0.0
Service Water	0	0	0	0	0.0
HVAC Equipment Losses	0	0	0	0	0.0
Adj Air Transfer Heat	0	0	0	0	0.0
Sizing Factor Correction	0	0	0	0	0.0
Time Delay Correction	0	0	0	0	0.0
Grand Total	-383	-352	0	-735	100.0

Engineering Checks

Heating Mbh	-0.74	Input Ventilation cfm	8
Heating cfm	27.78	Calculated Ventilation cfm	8
ft²/Mbh	-189.00	Number of People	0.00
cfm/Mbh	-37.78	People per 1000 ft²	0
Conditioned ft²	139.0		

ROOM_02_230B_OPEN OFFICE_R03

Conditions at Time of Cooling Peak

Outside	DB / WB / HR	74.0 °F	/	62.2 °F	/	65.2 gr/lb
Room	DB / RH / HR	75.0 °F	/	51.8 %	/	67.0 gr/lb

	Instant Sensible (Btu/h)	Time Delay Sensible (Btu/h)	Latent (Btu/h)	Total (Btu/h)	Percent of Total (%)
Roof	0	0	0	0	0.0
Other Roof	0	0	0	0	0.0
Glass	3767	15189	0	18956	71.5
Door	0	0	0	0	0.0
Wall	0	17	0	17	0.1
Below-Grade Wall	0	0	0	0	0.0
Other Wall	0	0	0	0	0.0
Partition	0	0	0	0	0.0
Exterior Floor	0	0	0	0	0.0
Interior Floor	0	-9075	0	-9075	-34.2
Slab	0	0	0	0	0.0
Other Floor	0	0	0	0	0.0
Infiltration	0	0	0	0	0.0
Envelope Subtotal	3767	6130	0	9898	-
People	1270	2725	3024	7019	26.5
Lights	612	1366	0	1979	7.5
RA Sensible (Lights)	703	0	0	703	2.7
Miscellaneous Loads	5893	6659	0	12552	47.4
Internal Subtotal	8479	10750	3024	22253	-
RA (All Other)	0	0	0	0	0.0
DOA Direct to Room	0	0	0	0	0.0
Ceiling	0	-2351	0	-2351	-8.9
Refrigeration	0	0	0	0	0.0
Service Water	0	0	0	0	0.0
HVAC Equipment Losses	0	0	0	0	0.0
Adj Air Transfer Heat	0	0	0	0	0.0
Sizing Factor Correction	0	0	0	0	0.0
Time Delay Correction	0	-3295	0	-3295	-12.4
Grand Total	12246	11234	3024	26505	100.0

Engineering Checks

Cooling tons	2.21	Input Ventilation cfm	96
Cooling cfm	1,063.37	Calculated Ventilation cfm	135
ft²/ton	307.15	Number of People	11.00
cfm/ton	481.35	People per 1000 ft²	16
Conditioned ft²	678.3		

Conditions at Time of Heating Peak

Outside	DB / WB / HR	16.4 °F	/	12.6 °F	/	5.3 gr/lb
Room	DB / RH / HR	70.0 °F	/	4.9 %	/	5.2 gr/lb

	Instant Sensible (Btu/h)	Time Delay Sensible (Btu/h)	Latent (Btu/h)	Total (Btu/h)	Percent of Total (%)
Roof	0	0	0	0	0.0
Other Roof	0	0	0	0	0.0
Glass	-3237	0	0	-3237	61.7
Door	0	0	0	0	0.0
Wall	0	-178	0	-178	3.4
Below-Grade Wall	0	0	0	0	0.0
Other Wall	0	0	0	0	0.0
Partition	0	1	0	1	0.0
Exterior Floor	0	0	0	0	0.0
Interior Floor	0	9	0	9	-0.2
Slab	0	0	0	0	0.0
Other Floor	0	0	0	0	0.0
Infiltration	0	0	0	0	0.0
Envelope Subtotal	-3237	-168	0	-3404	-
People	0	0	0	0	0.0
Lights	0	0	0	0	0.0
RA Sensible (Lights)	0	0	0	0	0.0
Miscellaneous Loads	0	0	0	0	0.0
Internal Subtotal	0	0	0	0	-
RA (All Other)	0	0	0	0	0.0
DOA Direct to Room	0	0	0	0	0.0
Ceiling	0	-1842	0	-1842	35.1
Refrigeration	0	0	0	0	0.0
Service Water	0	0	0	0	0.0
HVAC Equipment Losses	0	0	0	0	0.0
Adj Air Transfer Heat	0	0	0	0	0.0
Sizing Factor Correction	0	0	0	0	0.0
Time Delay Correction	0	0	0	0	0.0
Grand Total	-3237	-2009	0	-5246	100.0

Engineering Checks

Heating Mbh	-5.25	Input Ventilation cfm	96
Heating cfm	319.01	Calculated Ventilation cfm	90
ft²/Mbh	-129.32	Number of People	11.00
cfm/Mbh	-60.81	People per 1000 ft²	16
Conditioned ft²	678.3		

ROOM_02_230C_OPEN OFFICE_R03

Conditions at Time of Cooling Peak

Outside	DB / WB / HR	73.6 °F	/	62.1 °F	/	65.2 gr/lb
Room	DB / RH / HR	75.0 °F	/	51.7 %	/	66.9 gr/lb

	Instant Sensible (Btu/h)	Time Delay Sensible (Btu/h)	Latent (Btu/h)	Total (Btu/h)	Percent of Total (%)
Roof	0	0	0	0	0.0
Other Roof	0	0	0	0	0.0
Glass	3948	14595	0	18543	67.4
Door	0	0	0	0	0.0
Wall	0	50	0	50	0.2
Below-Grade Wall	0	0	0	0	0.0
Other Wall	0	0	0	0	0.0
Partition	0	0	0	0	0.0
Exterior Floor	0	0	0	0	0.0
Interior Floor	0	-8823	0	-8823	-32.1
Slab	0	0	0	0	0.0
Other Floor	0	0	0	0	0.0
Infiltration	0	0	0	0	0.0
Envelope Subtotal	3948	5822	0	9769	-
People	1270	2693	3024	6987	25.4
Lights	715	1619	0	2334	8.5
RA Sensible (Lights)	821	0	0	821	3.0
Miscellaneous Loads	6125	6904	0	13028	47.3
Internal Subtotal	8930	11215	3024	23170	-
RA (All Other)	0	0	0	0	0.0
DOA Direct to Room	0	0	0	0	0.0
Ceiling	0	-2348	0	-2348	-8.5
Refrigeration	0	0	0	0	0.0
Service Water	0	0	0	0	0.0
HVAC Equipment Losses	0	0	0	0	0.0
Adj Air Transfer Heat	0	0	0	0	0.0
Sizing Factor Correction	0	0	0	0	0.0
Time Delay Correction	0	-3065	0	-3065	-11.1
Grand Total	12878	11624	3024	27527	100.0

Engineering Checks

Cooling tons	2.29	Input Ventilation cfm	102
Cooling cfm	1,138.89	Calculated Ventilation cfm	145
ft²/ton	345.16	Number of People	10.99
cfm/ton	496.39	People per 1000 ft²	14
Conditioned ft²	791.7		

Conditions at Time of Heating Peak

Outside	DB / WB / HR	16.4 °F	/	12.6 °F	/	5.3 gr/lb
Room	DB / RH / HR	70.0 °F	/	4.9 %	/	5.2 gr/lb

	Instant Sensible (Btu/h)	Time Delay Sensible (Btu/h)	Latent (Btu/h)	Total (Btu/h)	Percent of Total (%)
Roof	0	0	0	0	0.0
Other Roof	0	0	0	0	0.0
Glass	-2924	0	0	-2924	56.3
Door	0	0	0	0	0.0
Wall	0	-279	0	-279	5.4
Below-Grade Wall	0	0	0	0	0.0
Other Wall	0	0	0	0	0.0
Partition	0	1	0	1	0.0
Exterior Floor	0	0	0	0	0.0
Interior Floor	0	69	0	69	-1.3
Slab	0	0	0	0	0.0
Other Floor	0	0	0	0	0.0
Infiltration	0	0	0	0	0.0
Envelope Subtotal	-2924	-209	0	-3133	-
People	0	0	0	0	0.0
Lights	0	0	0	0	0.0
RA Sensible (Lights)	0	0	0	0	0.0
Miscellaneous Loads	0	0	0	0	0.0
Internal Subtotal	0	0	0	0	-
RA (All Other)	0	0	0	0	0.0
DOA Direct to Room	0	0	0	0	0.0
Ceiling	0	-2059	0	-2059	39.7
Refrigeration	0	0	0	0	0.0
Service Water	0	0	0	0	0.0
HVAC Equipment Losses	0	0	0	0	0.0
Adj Air Transfer Heat	0	0	0	0	0.0
Sizing Factor Correction	0	0	0	0	0.0
Time Delay Correction	0	0	0	0	0.0
Grand Total	-2924	-2268	0	-5192	100.0

Engineering Checks

Heating Mbh	-5.19	Input Ventilation cfm	102
Heating cfm	341.67	Calculated Ventilation cfm	97
ft²/Mbh	-152.51	Number of People	10.99
cfm/Mbh	-65.81	People per 1000 ft²	14
Conditioned ft²	791.7		

ROOM_02_230D_OPEN OFFICE_R03

Conditions at Time of Cooling Peak

Outside	DB / WB / HR	73.6 °F	/	62.1 °F	/	65.2 gr/lb
Room	DB / RH / HR	75.0 °F	/	52.1 %	/	67.3 gr/lb

	Instant Sensible (Btu/h)	Time Delay Sensible (Btu/h)	Latent (Btu/h)	Total (Btu/h)	Percent of Total (%)
Roof	0	0	0	0	0.0
Other Roof	0	0	0	0	0.0
Glass	4031	10087	0	14118	44.4
Door	0	0	0	0	0.0
Wall	0	74	0	74	0.2
Below-Grade Wall	0	0	0	0	0.0
Other Wall	0	0	0	0	0.0
Partition	0	-348	0	-348	-1.1
Exterior Floor	0	0	0	0	0.0
Interior Floor	0	-6815	0	-6815	-21.4
Slab	0	0	0	0	0.0
Other Floor	0	0	0	0	0.0
Infiltration	0	0	0	0	0.0
Envelope Subtotal	4031	2998	0	7029	-
People	1617	3217	3849	8683	27.3
Lights	1022	2247	0	3269	10.3
RA Sensible (Lights)	1174	0	0	1174	3.7
Miscellaneous Loads	8050	8548	0	16598	52.2
Internal Subtotal	11863	14012	3849	29724	-
RA (All Other)	0	0	0	0	0.0
DOA Direct to Room	0	0	0	0	0.0
Ceiling	0	-1852	0	-1852	-5.8
Refrigeration	0	0	0	0	0.0
Service Water	0	0	0	0	0.0
HVAC Equipment Losses	0	0	0	0	0.0
Adj Air Transfer Heat	0	0	0	0	0.0
Sizing Factor Correction	0	0	0	0	0.0
Time Delay Correction	0	-3087	0	-3087	-9.7
Grand Total	15894	12071	3849	31813	100.0

Engineering Checks

Cooling tons	2.65	Input Ventilation cfm	138
Cooling cfm	1,532.53	Calculated Ventilation cfm	195
ft²/ton	427.09	Number of People	14.01
cfm/ton	577.96	People per 1000 ft²	12
Conditioned ft²	1132.1		

Conditions at Time of Heating Peak

Outside	DB / WB / HR	16.4 °F	/	12.6 °F	/	5.3 gr/lb
Room	DB / RH / HR	70.0 °F	/	4.9 %	/	5.2 gr/lb

	Instant Sensible (Btu/h)	Time Delay Sensible (Btu/h)	Latent (Btu/h)	Total (Btu/h)	Percent of Total (%)
Roof	0	0	0	0	0.0
Other Roof	0	0	0	0	0.0
Glass	-2275	0	0	-2275	37.2
Door	0	0	0	0	0.0
Wall	0	-233	0	-233	3.8
Below-Grade Wall	0	0	0	0	0.0
Other Wall	0	0	0	0	0.0
Partition	0	-605	0	-605	9.9
Exterior Floor	0	0	0	0	0.0
Interior Floor	0	80	0	80	-1.3
Slab	0	0	0	0	0.0
Other Floor	0	0	0	0	0.0
Infiltration	0	0	0	0	0.0
Envelope Subtotal	-2275	-758	0	-3033	-
People	0	0	0	0	0.0
Lights	0	0	0	0	0.0
RA Sensible (Lights)	0	0	0	0	0.0
Miscellaneous Loads	0	0	0	0	0.0
Internal Subtotal	0	0	0	0	-
RA (All Other)	0	0	0	0	0.0
DOA Direct to Room	0	0	0	0	0.0
Ceiling	0	-3075	0	-3075	50.3
Refrigeration	0	0	0	0	0.0
Service Water	0	0	0	0	0.0
HVAC Equipment Losses	0	0	0	0	0.0
Adj Air Transfer Heat	0	0	0	0	0.0
Sizing Factor Correction	0	0	0	0	0.0
Time Delay Correction	0	0	0	0	0.0
Grand Total	-2275	-3833	0	-6108	100.0

Engineering Checks

Heating Mbh	-6.11	Input Ventilation cfm	138
Heating cfm	459.76	Calculated Ventilation cfm	130
ft²/Mbh	-185.37	Number of People	14.01
cfm/Mbh	-75.27	People per 1000 ft²	12
Conditioned ft²	1132.1		

ROOM_02_230E_OPEN OFFICE_R03

Conditions at Time of Cooling Peak

Outside	DB / WB / HR	73.6 °F	/	62.1 °F	/	65.2 gr/lb
Room	DB / RH / HR	75.0 °F	/	51.7 %	/	66.9 gr/lb

	Instant Sensible (Btu/h)	Time Delay Sensible (Btu/h)	Latent (Btu/h)	Total (Btu/h)	Percent of Total (%)
Roof	0	0	0	0	0.0
Other Roof	0	0	0	0	0.0
Glass	3589	14411	0	18000	66.1
Door	0	0	0	0	0.0
Wall	0	43	0	43	0.2
Below-Grade Wall	0	0	0	0	0.0
Other Wall	0	0	0	0	0.0
Partition	0	0	0	0	0.0
Exterior Floor	0	0	0	0	0.0
Interior Floor	0	-8513	0	-8513	-31.3
Slab	0	0	0	0	0.0
Other Floor	0	0	0	0	0.0
Infiltration	0	0	0	0	0.0
Envelope Subtotal	3589	5941	0	9530	-
People	1270	2699	3024	6993	25.7
Lights	706	1577	0	2283	8.4
RA Sensible (Lights)	810	0	0	810	3.0
Miscellaneous Loads	6104	6884	0	12988	47.7
Internal Subtotal	8890	11159	3024	23074	-
RA (All Other)	0	0	0	0	0.0
DOA Direct to Room	0	0	0	0	0.0
Ceiling	0	-2083	0	-2083	-7.7
Refrigeration	0	0	0	0	0.0
Service Water	0	0	0	0	0.0
HVAC Equipment Losses	0	0	0	0	0.0
Adj Air Transfer Heat	0	0	0	0	0.0
Sizing Factor Correction	0	0	0	0	0.0
Time Delay Correction	0	-3309	0	-3309	-12.2
Grand Total	12479	11708	3024	27211	100.0

Engineering Checks

Cooling tons	2.27	Input Ventilation cfm	102
Cooling cfm	1,132.13	Calculated Ventilation cfm	144
ft²/ton	344.70	Number of People	11.00
cfm/ton	499.16	People per 1000 ft²	14
Conditioned ft²	781.6		

Conditions at Time of Heating Peak

Outside	DB / WB / HR	16.4 °F	/	12.6 °F	/	5.3 gr/lb
Room	DB / RH / HR	70.0 °F	/	4.9 %	/	5.2 gr/lb

	Instant Sensible (Btu/h)	Time Delay Sensible (Btu/h)	Latent (Btu/h)	Total (Btu/h)	Percent of Total (%)
Roof	0	0	0	0	0.0
Other Roof	0	0	0	0	0.0
Glass	-2875	0	0	-2875	55.5
Door	0	0	0	0	0.0
Wall	0	-269	0	-269	5.2
Below-Grade Wall	0	0	0	0	0.0
Other Wall	0	0	0	0	0.0
Partition	0	1	0	1	0.0
Exterior Floor	0	0	0	0	0.0
Interior Floor	0	31	0	31	-0.6
Slab	0	0	0	0	0.0
Other Floor	0	0	0	0	0.0
Infiltration	0	0	0	0	0.0
Envelope Subtotal	-2875	-237	0	-3112	-
People	0	0	0	0	0.0
Lights	0	0	0	0	0.0
RA Sensible (Lights)	0	0	0	0	0.0
Miscellaneous Loads	0	0	0	0	0.0
Internal Subtotal	0	0	0	0	-
RA (All Other)	0	0	0	0	0.0
DOA Direct to Room	0	0	0	0	0.0
Ceiling	0	-2072	0	-2072	40.0
Refrigeration	0	0	0	0	0.0
Service Water	0	0	0	0	0.0
HVAC Equipment Losses	0	0	0	0	0.0
Adj Air Transfer Heat	0	0	0	0	0.0
Sizing Factor Correction	0	0	0	0	0.0
Time Delay Correction	0	0	0	0	0.0
Grand Total	-2875	-2309	0	-5184	100.0

Engineering Checks

Heating Mbh	-5.18	Input Ventilation cfm	102
Heating cfm	339.64	Calculated Ventilation cfm	96
ft²/Mbh	-150.78	Number of People	11.00
cfm/Mbh	-65.52	People per 1000 ft²	14
Conditioned ft²	781.6		

ROOM_02_230F_OPEN OFFICE_R03

Conditions at Time of Cooling Peak

Outside	DB / WB / HR	73.6 °F	/	62.1 °F	/	65.2 gr/lb
Room	DB / RH / HR	75.0 °F	/	50.8 %	/	65.7 gr/lb

	Instant Sensible (Btu/h)	Time Delay Sensible (Btu/h)	Latent (Btu/h)	Total (Btu/h)	Percent of Total (%)
Roof	0	0	0	0	0.0
Other Roof	0	0	0	0	0.0
Glass	4115	15038	0	19152	70.7
Door	0	0	0	0	0.0
Wall	0	58	0	58	0.2
Below-Grade Wall	0	0	0	0	0.0
Other Wall	0	0	0	0	0.0
Partition	0	0	0	0	0.0
Exterior Floor	0	0	0	0	0.0
Interior Floor	0	-8769	0	-8769	-32.4
Slab	0	0	0	0	0.0
Other Floor	0	0	0	0	0.0
Infiltration	0	0	0	0	0.0
Envelope Subtotal	4115	6326	0	10441	-
People	1155	2414	2199	5768	21.3
Lights	707	1574	0	2281	8.4
RA Sensible (Lights)	811	0	0	811	3.0
Miscellaneous Loads	6106	6778	0	12884	47.6
Internal Subtotal	8779	10766	2199	21745	-
RA (All Other)	0	0	0	0	0.0
DOA Direct to Room	0	0	0	0	0.0
Ceiling	0	-2132	0	-2132	-7.9
Refrigeration	0	0	0	0	0.0
Service Water	0	0	0	0	0.0
HVAC Equipment Losses	0	0	0	0	0.0
Adj Air Transfer Heat	0	0	0	0	0.0
Sizing Factor Correction	0	0	0	0	0.0
Time Delay Correction	0	-2983	0	-2983	-11.0
Grand Total	12893	11978	2199	27071	100.0

Engineering Checks

Cooling tons	2.26	Input Ventilation cfm	102
Cooling cfm	1,132.87	Calculated Ventilation cfm	144
ft²/ton	346.96	Number of People	11.00
cfm/ton	502.08	People per 1000 ft²	14
Conditioned ft²	782.6		

Conditions at Time of Heating Peak

Outside	DB / WB / HR	16.4 °F	/	12.6 °F	/	5.3 gr/lb
Room	DB / RH / HR	70.0 °F	/	4.9 %	/	5.2 gr/lb

	Instant Sensible (Btu/h)	Time Delay Sensible (Btu/h)	Latent (Btu/h)	Total (Btu/h)	Percent of Total (%)
Roof	0	0	0	0	0.0
Other Roof	0	0	0	0	0.0
Glass	-3278	0	0	-3278	57.7
Door	0	0	0	0	0.0
Wall	0	-270	0	-270	4.8
Below-Grade Wall	0	0	0	0	0.0
Other Wall	0	0	0	0	0.0
Partition	0	1	0	1	0.0
Exterior Floor	0	0	0	0	0.0
Interior Floor	0	-4	0	-4	0.1
Slab	0	0	0	0	0.0
Other Floor	0	0	0	0	0.0
Infiltration	0	0	0	0	0.0
Envelope Subtotal	-3278	-273	0	-3550	-
People	0	0	0	0	0.0
Lights	0	0	0	0	0.0
RA Sensible (Lights)	0	0	0	0	0.0
Miscellaneous Loads	0	0	0	0	0.0
Internal Subtotal	0	0	0	0	-
RA (All Other)	0	0	0	0	0.0
DOA Direct to Room	0	0	0	0	0.0
Ceiling	0	-2132	0	-2132	37.5
Refrigeration	0	0	0	0	0.0
Service Water	0	0	0	0	0.0
HVAC Equipment Losses	0	0	0	0	0.0
Adj Air Transfer Heat	0	0	0	0	0.0
Sizing Factor Correction	0	0	0	0	0.0
Time Delay Correction	0	0	0	0	0.0
Grand Total	-3278	-2405	0	-5683	100.0

Engineering Checks

Heating Mbh	-5.68	Input Ventilation cfm	102
Heating cfm	339.86	Calculated Ventilation cfm	96
ft²/Mbh	-137.73	Number of People	11.00
cfm/Mbh	-59.81	People per 1000 ft²	14
Conditioned ft²	782.6		

ROOM_02_230G_OPEN OFFICE_R03

Conditions at Time of Cooling Peak

Outside	DB / WB / HR	75.6 °F	/	65.9 °F	/	80.2 gr/lb
Room	DB / RH / HR	75.0 °F	/	51.2 %	/	66.3 gr/lb

	Instant Sensible (Btu/h)	Time Delay Sensible (Btu/h)	Latent (Btu/h)	Total (Btu/h)	Percent of Total (%)
Roof	0	0	0	0	0.0
Other Roof	0	0	0	0	0.0
Glass	4279	20886	0	25165	79.8
Door	0	0	0	0	0.0
Wall	0	-34	0	-34	-0.1
Below-Grade Wall	0	0	0	0	0.0
Other Wall	0	0	0	0	0.0
Partition	0	0	0	0	0.0
Exterior Floor	0	0	0	0	0.0
Interior Floor	0	-10041	0	-10041	-31.9
Slab	0	0	0	0	0.0
Other Floor	0	0	0	0	0.0
Infiltration	0	0	0	0	0.0
Envelope Subtotal	4279	10811	0	15090	-
People	1270	2259	3024	6554	20.8
Lights	688	1441	0	2129	6.8
RA Sensible (Lights)	790	0	0	790	2.5
Miscellaneous Loads	6063	6078	0	12141	38.5
Internal Subtotal	8811	9778	3024	21614	-
RA (All Other)	0	0	0	0	0.0
DOA Direct to Room	0	0	0	0	0.0
Ceiling	0	-2965	0	-2965	-9.4
Refrigeration	0	0	0	0	0.0
Service Water	0	0	0	0	0.0
HVAC Equipment Losses	0	0	0	0	0.0
Adj Air Transfer Heat	0	0	0	0	0.0
Sizing Factor Correction	0	0	0	0	0.0
Time Delay Correction	0	-2219	0	-2219	-7.0
Grand Total	13090	15406	3024	31520	100.0

Engineering Checks

Cooling tons	2.63	Input Ventilation cfm	101
Cooling cfm	1,268.41	Calculated Ventilation cfm	161
ft²/ton	290.04	Number of People	11.01
cfm/ton	482.81	People per 1000 ft²	14
Conditioned ft²	761.8		

Conditions at Time of Heating Peak

Outside	DB / WB / HR	16.4 °F	/	12.6 °F	/	5.3 gr/lb
Room	DB / RH / HR	70.0 °F	/	4.9 %	/	5.2 gr/lb

	Instant Sensible (Btu/h)	Time Delay Sensible (Btu/h)	Latent (Btu/h)	Total (Btu/h)	Percent of Total (%)
Roof	0	0	0	0	0.0
Other Roof	0	0	0	0	0.0
Glass	-6677	0	0	-6677	70.3
Door	0	0	0	0	0.0
Wall	0	-546	0	-546	5.8
Below-Grade Wall	0	0	0	0	0.0
Other Wall	0	0	0	0	0.0
Partition	0	0	0	0	0.0
Exterior Floor	0	0	0	0	0.0
Interior Floor	0	-83	0	-83	0.9
Slab	0	0	0	0	0.0
Other Floor	0	0	0	0	0.0
Infiltration	0	0	0	0	0.0
Envelope Subtotal	-6677	-629	0	-7306	-
People	0	0	0	0	0.0
Lights	0	0	0	0	0.0
RA Sensible (Lights)	0	0	0	0	0.0
Miscellaneous Loads	0	0	0	0	0.0
Internal Subtotal	0	0	0	0	-
RA (All Other)	0	0	0	0	0.0
DOA Direct to Room	0	0	0	0	0.0
Ceiling	0	-2198	0	-2198	23.1
Refrigeration	0	0	0	0	0.0
Service Water	0	0	0	0	0.0
HVAC Equipment Losses	0	0	0	0	0.0
Adj Air Transfer Heat	0	0	0	0	0.0
Sizing Factor Correction	0	0	0	0	0.0
Time Delay Correction	0	0	0	0	0.0
Grand Total	-6677	-2826	0	-9503	100.0

Engineering Checks

Heating Mbh	-9.50	Input Ventilation cfm	101
Heating cfm	380.52	Calculated Ventilation cfm	108
ft²/Mbh	-80.17	Number of People	11.01
cfm/Mbh	-40.04	People per 1000 ft²	14
Conditioned ft²	761.8		

ROOM_02_231_BREAKOUT_R03

Conditions at Time of Cooling Peak

Outside	DB / WB / HR	88.3 °F	/	73.2 °F	/	99.5 gr/lb
Room	DB / RH / HR	75.0 °F	/	50.2 %	/	64.9 gr/lb

	Instant Sensible (Btu/h)	Time Delay Sensible (Btu/h)	Latent (Btu/h)	Total (Btu/h)	Percent of Total (%)
Roof	0	0	0	0	0.0
Other Roof	0	0	0	0	0.0
Glass	486	2844	0	3331	73.1
Door	0	0	0	0	0.0
Wall	0	79	0	79	1.7
Below-Grade Wall	0	0	0	0	0.0
Other Wall	0	0	0	0	0.0
Partition	0	-87	0	-87	-1.9
Exterior Floor	0	0	0	0	0.0
Interior Floor	0	-714	0	-714	-15.7
Slab	0	0	0	0	0.0
Other Floor	0	0	0	0	0.0
Infiltration	0	0	0	0	0.0
Envelope Subtotal	486	2123	0	2609	-
People	141	336	269	747	16.4
Lights	63	160	0	223	4.9
RA Sensible (Lights)	72	0	0	72	1.6
Miscellaneous Loads	552	674	0	1225	26.9
Internal Subtotal	828	1170	269	2267	-
RA (All Other)	0	0	0	0	0.0
DOA Direct to Room	0	0	0	0	0.0
Ceiling	0	-90	0	-90	-2.0
Refrigeration	0	0	0	0	0.0
Service Water	0	0	0	0	0.0
HVAC Equipment Losses	0	0	0	0	0.0
Adj Air Transfer Heat	0	0	0	0	0.0
Sizing Factor Correction	0	0	0	0	0.0
Time Delay Correction	0	-231	0	-231	-5.1
Grand Total	1315	2972	269	4556	100.0

Engineering Checks

Cooling tons	0.38	Input Ventilation cfm	11
Cooling cfm	192.89	Calculated Ventilation cfm	25
ft²/ton	183.16	Number of People	1.35
cfm/ton	507.94	People per 1000 ft²	19
Conditioned ft²	69.5		

Conditions at Time of Heating Peak

Outside	DB / WB / HR	16.4 °F	/	12.6 °F	/	5.3 gr/lb
Room	DB / RH / HR	70.0 °F	/	4.9 %	/	5.2 gr/lb

	Instant Sensible (Btu/h)	Time Delay Sensible (Btu/h)	Latent (Btu/h)	Total (Btu/h)	Percent of Total (%)
Roof	0	0	0	0	0.0
Other Roof	0	0	0	0	0.0
Glass	-661	0	0	-661	61.4
Door	0	0	0	0	0.0
Wall	0	-131	0	-131	12.1
Below-Grade Wall	0	0	0	0	0.0
Other Wall	0	0	0	0	0.0
Partition	0	-60	0	-60	5.5
Exterior Floor	0	0	0	0	0.0
Interior Floor	0	-25	0	-25	2.3
Slab	0	0	0	0	0.0
Other Floor	0	0	0	0	0.0
Infiltration	0	0	0	0	0.0
Envelope Subtotal	-661	-216	0	-877	-
People	0	0	0	0	0.0
Lights	0	0	0	0	0.0
RA Sensible (Lights)	0	0	0	0	0.0
Miscellaneous Loads	0	0	0	0	0.0
Internal Subtotal	0	0	0	0	-
RA (All Other)	0	0	0	0	0.0
DOA Direct to Room	0	0	0	0	0.0
Ceiling	0	-200	0	-200	18.6
Refrigeration	0	0	0	0	0.0
Service Water	0	0	0	0	0.0
HVAC Equipment Losses	0	0	0	0	0.0
Adj Air Transfer Heat	0	0	0	0	0.0
Sizing Factor Correction	0	0	0	0	0.0
Time Delay Correction	0	0	0	0	0.0
Grand Total	-661	-415	0	-1077	100.0

Engineering Checks

Heating Mbh	-1.08	Input Ventilation cfm	11
Heating cfm	57.87	Calculated Ventilation cfm	16
ft²/Mbh	-64.58	Number of People	1.35
cfm/Mbh	-53.74	People per 1000 ft²	19
Conditioned ft²	69.5		

ROOM_02_231_STORAGE_R03

Conditions at Time of Cooling Peak

Outside	DB / WB / HR	87.1 °F	/	72.9 °F	/	99.5 gr/lb
Room	DB / RH / HR	75.0 °F	/	50.5 %	/	65.3 gr/lb

	Instant Sensible (Btu/h)	Time Delay Sensible (Btu/h)	Latent (Btu/h)	Total (Btu/h)	Percent of Total (%)
Roof	0	0	0	0	0.0
Other Roof	0	0	0	0	0.0
Glass	0	0	0	0	0.0
Door	0	4	0	4	0.6
Wall	0	0	0	0	0.0
Below-Grade Wall	0	0	0	0	0.0
Other Wall	0	0	0	0	0.0
Partition	0	-24	0	-24	-3.5
Exterior Floor	0	0	0	0	0.0
Interior Floor	0	-20	0	-20	-2.9
Slab	0	0	0	0	0.0
Other Floor	0	0	0	0	0.0
Infiltration	0	0	0	0	0.0
Envelope Subtotal	0	-40	0	-40	-
People	25	74	48	147	21.0
Lights	43	155	0	198	28.4
RA Sensible (Lights)	49	0	0	49	7.1
Miscellaneous Loads	98	151	0	248	35.5
Internal Subtotal	215	380	48	643	-
RA (All Other)	0	0	0	0	0.0
DOA Direct to Room	0	0	0	0	0.0
Ceiling	0	96	0	96	13.8
Refrigeration	0	0	0	0	0.0
Service Water	0	0	0	0	0.0
HVAC Equipment Losses	0	0	0	0	0.0
Adj Air Transfer Heat	0	0	0	0	0.0
Sizing Factor Correction	0	0	0	0	0.0
Time Delay Correction	0	0	0	0	-0.1
Grand Total	215	436	48	699	100.0

Engineering Checks

Cooling tons	0.06	Input Ventilation cfm	4
Cooling cfm	45.00	Calculated Ventilation cfm	6
ft²/ton	818.75	Number of People	0.24
cfm/ton	772.49	People per 1000 ft²	5
Conditioned ft²	47.7		

Conditions at Time of Heating Peak

Outside	DB / WB / HR	16.4 °F	/	12.6 °F	/	5.3 gr/lb
Room	DB / RH / HR	70.0 °F	/	4.9 %	/	5.2 gr/lb

	Instant Sensible (Btu/h)	Time Delay Sensible (Btu/h)	Latent (Btu/h)	Total (Btu/h)	Percent of Total (%)
Roof	0	0	0	0	0.0
Other Roof	0	0	0	0	0.0
Glass	0	0	0	0	0.0
Door	0	-5	0	-5	3.0
Wall	0	0	0	0	0.0
Below-Grade Wall	0	0	0	0	0.0
Other Wall	0	0	0	0	0.0
Partition	0	-34	0	-34	19.9
Exterior Floor	0	0	0	0	0.0
Interior Floor	0	6	0	6	-3.4
Slab	0	0	0	0	0.0
Other Floor	0	0	0	0	0.0
Infiltration	0	0	0	0	0.0
Envelope Subtotal	0	-33	0	-33	-
People	0	0	0	0	0.0
Lights	0	0	0	0	0.0
RA Sensible (Lights)	0	0	0	0	0.0
Miscellaneous Loads	0	0	0	0	0.0
Internal Subtotal	0	0	0	0	-
RA (All Other)	0	0	0	0	0.0
DOA Direct to Room	0	0	0	0	0.0
Ceiling	0	-136	0	-136	80.4
Refrigeration	0	0	0	0	0.0
Service Water	0	0	0	0	0.0
HVAC Equipment Losses	0	0	0	0	0.0
Adj Air Transfer Heat	0	0	0	0	0.0
Sizing Factor Correction	0	0	0	0	0.0
Time Delay Correction	0	0	0	0	0.0
Grand Total	0	-169	0	-169	100.0

Engineering Checks

Heating Mbh	-0.17	Input Ventilation cfm	4
Heating cfm	13.50	Calculated Ventilation cfm	4
ft²/Mbh	-282.28	Number of People	0.24
cfm/Mbh	-79.92	People per 1000 ft²	5
Conditioned ft²	47.7		

ROOM_02_232_OFFICE_R04

Conditions at Time of Cooling Peak

Outside	DB / WB / HR	86.4 °F	/	72.7 °F	/	99.5 gr/lb
Room	DB / RH / HR	75.0 °F	/	50.6 %	/	65.4 gr/lb

	Instant Sensible (Btu/h)	Time Delay Sensible (Btu/h)	Latent (Btu/h)	Total (Btu/h)	Percent of Total (%)
Roof	0	0	0	0	0.0
Other Roof	0	0	0	0	0.0
Glass	0	0	0	0	0.0
Door	0	5	0	5	0.2
Wall	0	0	0	0	0.0
Below-Grade Wall	0	0	0	0	0.0
Other Wall	0	0	0	0	0.0
Partition	0	-96	0	-96	-3.4
Exterior Floor	0	0	0	0	0.0
Interior Floor	0	-168	0	-168	-5.9
Slab	0	0	0	0	0.0
Other Floor	0	0	0	0	0.0
Infiltration	0	0	0	0	0.0
Envelope Subtotal	0	-260	0	-260	-
People	105	271	200	576	20.3
Lights	140	428	0	568	20.0
RA Sensible (Lights)	161	0	0	161	5.7
Miscellaneous Loads	690	903	0	1593	56.2
Internal Subtotal	1096	1602	200	2899	-
RA (All Other)	0	0	0	0	0.0
DOA Direct to Room	0	0	0	0	0.0
Ceiling	0	197	0	197	7.0
Refrigeration	0	0	0	0	0.0
Service Water	0	0	0	0	0.0
HVAC Equipment Losses	0	0	0	0	0.0
Adj Air Transfer Heat	0	0	0	0	0.0
Sizing Factor Correction	0	0	0	0	0.0
Time Delay Correction	0	-2	0	-2	-0.1
Grand Total	1096	1538	200	2834	100.0

Engineering Checks

Cooling tons	0.24	Input Ventilation cfm	13
Cooling cfm	146.95	Calculated Ventilation cfm	21
ft²/ton	580.63	Number of People	1.00
cfm/ton	622.01	People per 1000 ft²	7
Conditioned ft²	137.1		

Conditions at Time of Heating Peak

Outside	DB / WB / HR	16.4 °F	/	12.6 °F	/	5.3 gr/lb
Room	DB / RH / HR	70.0 °F	/	4.9 %	/	5.2 gr/lb

	Instant Sensible (Btu/h)	Time Delay Sensible (Btu/h)	Latent (Btu/h)	Total (Btu/h)	Percent of Total (%)
Roof	0	0	0	0	0.0
Other Roof	0	0	0	0	0.0
Glass	0	0	0	0	0.0
Door	0	-10	0	-10	2.6
Wall	0	0	0	0	0.0
Below-Grade Wall	0	0	0	0	0.0
Other Wall	0	0	0	0	0.0
Partition	0	-41	0	-41	10.4
Exterior Floor	0	0	0	0	0.0
Interior Floor	0	25	0	25	-6.3
Slab	0	0	0	0	0.0
Other Floor	0	0	0	0	0.0
Infiltration	0	0	0	0	0.0
Envelope Subtotal	0	-27	0	-27	-
People	0	0	0	0	0.0
Lights	0	0	0	0	0.0
RA Sensible (Lights)	0	0	0	0	0.0
Miscellaneous Loads	0	0	0	0	0.0
Internal Subtotal	0	0	0	0	-
RA (All Other)	0	0	0	0	0.0
DOA Direct to Room	0	0	0	0	0.0
Ceiling	0	-370	0	-370	93.3
Refrigeration	0	0	0	0	0.0
Service Water	0	0	0	0	0.0
HVAC Equipment Losses	0	0	0	0	0.0
Adj Air Transfer Heat	0	0	0	0	0.0
Sizing Factor Correction	0	0	0	0	0.0
Time Delay Correction	0	0	0	0	0.0
Grand Total	0	-397	0	-397	100.0

Engineering Checks

Heating Mbh	-0.40	Input Ventilation cfm	13
Heating cfm	44.08	Calculated Ventilation cfm	12
ft²/Mbh	-345.44	Number of People	1.00
cfm/Mbh	-111.04	People per 1000 ft²	7
Conditioned ft²	137.1		

ROOM_02_233_OFFICE_R04

Conditions at Time of Cooling Peak

Outside	DB / WB / HR	87.8 °F	/	73.1 °F	/	99.5 gr/lb
Room	DB / RH / HR	75.0 °F	/	50.6 %	/	65.5 gr/lb

	Instant Sensible (Btu/h)	Time Delay Sensible (Btu/h)	Latent (Btu/h)	Total (Btu/h)	Percent of Total (%)
Roof	0	0	0	0	0.0
Other Roof	0	0	0	0	0.0
Glass	0	0	0	0	0.0
Door	0	-5	0	-5	-0.2
Wall	0	0	0	0	0.0
Below-Grade Wall	0	0	0	0	0.0
Other Wall	0	0	0	0	0.0
Partition	0	-272	0	-272	-9.9
Exterior Floor	0	0	0	0	0.0
Interior Floor	0	-162	0	-162	-5.9
Slab	0	0	0	0	0.0
Other Floor	0	0	0	0	0.0
Infiltration	0	0	0	0	0.0
Envelope Subtotal	0	-439	0	-439	-
People	105	267	200	572	20.8
Lights	151	458	0	609	22.1
RA Sensible (Lights)	173	0	0	173	6.3
Miscellaneous Loads	711	926	0	1637	59.6
Internal Subtotal	1140	1650	200	2990	-
RA (All Other)	0	0	0	0	0.0
DOA Direct to Room	0	0	0	0	0.0
Ceiling	0	199	0	199	7.2
Refrigeration	0	0	0	0	0.0
Service Water	0	0	0	0	0.0
HVAC Equipment Losses	0	0	0	0	0.0
Adj Air Transfer Heat	0	0	0	0	0.0
Sizing Factor Correction	0	0	0	0	0.0
Time Delay Correction	0	-2	0	-2	-0.1
Grand Total	1140	1408	200	2748	100.0

Engineering Checks

Cooling tons	0.23	Input Ventilation cfm	14
Cooling cfm	153.80	Calculated Ventilation cfm	22
ft²/ton	643.59	Number of People	1.00
cfm/ton	671.53	People per 1000 ft²	7
Conditioned ft²	147.4		

Conditions at Time of Heating Peak

Outside	DB / WB / HR	16.4 °F	/	12.6 °F	/	5.3 gr/lb
Room	DB / RH / HR	70.0 °F	/	4.9 %	/	5.2 gr/lb

	Instant Sensible (Btu/h)	Time Delay Sensible (Btu/h)	Latent (Btu/h)	Total (Btu/h)	Percent of Total (%)
Roof	0	0	0	0	0.0
Other Roof	0	0	0	0	0.0
Glass	0	0	0	0	0.0
Door	0	-6	0	-6	1.6
Wall	0	0	0	0	0.0
Below-Grade Wall	0	0	0	0	0.0
Other Wall	0	0	0	0	0.0
Partition	0	-19	0	-19	5.1
Exterior Floor	0	0	0	0	0.0
Interior Floor	0	42	0	42	-11.3
Slab	0	0	0	0	0.0
Other Floor	0	0	0	0	0.0
Infiltration	0	0	0	0	0.0
Envelope Subtotal	0	17	0	17	-
People	0	0	0	0	0.0
Lights	0	0	0	0	0.0
RA Sensible (Lights)	0	0	0	0	0.0
Miscellaneous Loads	0	0	0	0	0.0
Internal Subtotal	0	0	0	0	-
RA (All Other)	0	0	0	0	0.0
DOA Direct to Room	0	0	0	0	0.0
Ceiling	0	-389	0	-389	104.6
Refrigeration	0	0	0	0	0.0
Service Water	0	0	0	0	0.0
HVAC Equipment Losses	0	0	0	0	0.0
Adj Air Transfer Heat	0	0	0	0	0.0
Sizing Factor Correction	0	0	0	0	0.0
Time Delay Correction	0	0	0	0	0.0
Grand Total	0	-372	0	-372	100.0

Engineering Checks

Heating Mbh	-0.37	Input Ventilation cfm	14
Heating cfm	46.14	Calculated Ventilation cfm	12
ft²/Mbh	-396.30	Number of People	1.00
cfm/Mbh	-124.08	People per 1000 ft²	7
Conditioned ft²	147.4		

ROOM_02_234_OFFICE_R04

Conditions at Time of Cooling Peak

Outside	DB / WB / HR	87.8 °F	/	73.1 °F	/	99.5 gr/lb
Room	DB / RH / HR	75.0 °F	/	50.7 %	/	65.6 gr/lb

	Instant Sensible (Btu/h)	Time Delay Sensible (Btu/h)	Latent (Btu/h)	Total (Btu/h)	Percent of Total (%)
Roof	0	0	0	0	0.0
Other Roof	0	0	0	0	0.0
Glass	0	0	0	0	0.0
Door	0	-5	0	-5	-0.2
Wall	0	0	0	0	0.0
Below-Grade Wall	0	0	0	0	0.0
Other Wall	0	0	0	0	0.0
Partition	0	-287	0	-287	-10.8
Exterior Floor	0	0	0	0	0.0
Interior Floor	0	-166	0	-166	-6.2
Slab	0	0	0	0	0.0
Other Floor	0	0	0	0	0.0
Infiltration	0	0	0	0	0.0
Envelope Subtotal	0	-459	0	-459	-
People	105	270	200	575	21.5
Lights	144	444	0	589	22.0
RA Sensible (Lights)	166	0	0	166	6.2
Miscellaneous Loads	698	922	0	1620	60.7
Internal Subtotal	1113	1637	200	2950	-
RA (All Other)	0	0	0	0	0.0
DOA Direct to Room	0	0	0	0	0.0
Ceiling	0	182	0	182	6.8
Refrigeration	0	0	0	0	0.0
Service Water	0	0	0	0	0.0
HVAC Equipment Losses	0	0	0	0	0.0
Adj Air Transfer Heat	0	0	0	0	0.0
Sizing Factor Correction	0	0	0	0	0.0
Time Delay Correction	0	-2	0	-2	-0.1
Grand Total	1113	1359	200	2671	100.0

Engineering Checks

Cooling tons	0.22	Input Ventilation cfm	13
Cooling cfm	149.54	Calculated Ventilation cfm	22
ft²/ton	633.49	Number of People	1.00
cfm/ton	671.61	People per 1000 ft²	7
Conditioned ft²	141.0		

Conditions at Time of Heating Peak

Outside	DB / WB / HR	16.4 °F	/	12.6 °F	/	5.3 gr/lb
Room	DB / RH / HR	70.0 °F	/	4.9 %	/	5.2 gr/lb

	Instant Sensible (Btu/h)	Time Delay Sensible (Btu/h)	Latent (Btu/h)	Total (Btu/h)	Percent of Total (%)
Roof	0	0	0	0	0.0
Other Roof	0	0	0	0	0.0
Glass	0	0	0	0	0.0
Door	0	-6	0	-6	1.8
Wall	0	0	0	0	0.0
Below-Grade Wall	0	0	0	0	0.0
Other Wall	0	0	0	0	0.0
Partition	0	-19	0	-19	5.4
Exterior Floor	0	0	0	0	0.0
Interior Floor	0	48	0	48	-13.8
Slab	0	0	0	0	0.0
Other Floor	0	0	0	0	0.0
Infiltration	0	0	0	0	0.0
Envelope Subtotal	0	23	0	23	-
People	0	0	0	0	0.0
Lights	0	0	0	0	0.0
RA Sensible (Lights)	0	0	0	0	0.0
Miscellaneous Loads	0	0	0	0	0.0
Internal Subtotal	0	0	0	0	-
RA (All Other)	0	0	0	0	0.0
DOA Direct to Room	0	0	0	0	0.0
Ceiling	0	-372	0	-372	106.6
Refrigeration	0	0	0	0	0.0
Service Water	0	0	0	0	0.0
HVAC Equipment Losses	0	0	0	0	0.0
Adj Air Transfer Heat	0	0	0	0	0.0
Sizing Factor Correction	0	0	0	0	0.0
Time Delay Correction	0	0	0	0	0.0
Grand Total	0	-349	0	-349	100.0

Engineering Checks

Heating Mbh	-0.35	Input Ventilation cfm	13
Heating cfm	44.86	Calculated Ventilation cfm	12
ft²/Mbh	-404.60	Number of People	1.00
cfm/Mbh	-128.71	People per 1000 ft²	7
Conditioned ft²	141.0		

ROOM_02_235_OFFICE_R04

Conditions at Time of Cooling Peak

Outside	DB / WB / HR	88.3 °F	/	73.2 °F	/	99.5 gr/lb
Room	DB / RH / HR	75.0 °F	/	50.7 %	/	65.5 gr/lb

	Instant Sensible (Btu/h)	Time Delay Sensible (Btu/h)	Latent (Btu/h)	Total (Btu/h)	Percent of Total (%)
Roof	0	0	0	0	0.0
Other Roof	0	0	0	0	0.0
Glass	0	0	0	0	0.0
Door	0	2	0	2	0.1
Wall	0	0	0	0	0.0
Below-Grade Wall	0	0	0	0	0.0
Other Wall	0	0	0	0	0.0
Partition	0	-269	0	-269	-9.9
Exterior Floor	0	0	0	0	0.0
Interior Floor	0	-172	0	-172	-6.3
Slab	0	0	0	0	0.0
Other Floor	0	0	0	0	0.0
Infiltration	0	0	0	0	0.0
Envelope Subtotal	0	-440	0	-440	-
People	105	271	200	576	21.2
Lights	145	452	0	596	21.9
RA Sensible (Lights)	166	0	0	166	6.1
Miscellaneous Loads	700	934	0	1634	60.0
Internal Subtotal	1116	1657	200	2973	-
RA (All Other)	0	0	0	0	0.0
DOA Direct to Room	0	0	0	0	0.0
Ceiling	0	192	0	192	7.1
Refrigeration	0	0	0	0	0.0
Service Water	0	0	0	0	0.0
HVAC Equipment Losses	0	0	0	0	0.0
Adj Air Transfer Heat	0	0	0	0	0.0
Sizing Factor Correction	0	0	0	0	0.0
Time Delay Correction	0	-2	0	-2	-0.1
Grand Total	1116	1408	200	2724	100.0

Engineering Checks

Cooling tons	0.23	Input Ventilation cfm	14
Cooling cfm	150.05	Calculated Ventilation cfm	22
ft²/ton	624.58	Number of People	1.00
cfm/ton	660.89	People per 1000 ft²	7
Conditioned ft²	141.8		

Conditions at Time of Heating Peak

Outside	DB / WB / HR	16.4 °F	/	12.6 °F	/	5.3 gr/lb
Room	DB / RH / HR	70.0 °F	/	4.9 %	/	5.2 gr/lb

	Instant Sensible (Btu/h)	Time Delay Sensible (Btu/h)	Latent (Btu/h)	Total (Btu/h)	Percent of Total (%)
Roof	0	0	0	0	0.0
Other Roof	0	0	0	0	0.0
Glass	0	0	0	0	0.0
Door	0	-5	0	-5	1.6
Wall	0	0	0	0	0.0
Below-Grade Wall	0	0	0	0	0.0
Other Wall	0	0	0	0	0.0
Partition	0	-16	0	-16	4.5
Exterior Floor	0	0	0	0	0.0
Interior Floor	0	48	0	48	-13.9
Slab	0	0	0	0	0.0
Other Floor	0	0	0	0	0.0
Infiltration	0	0	0	0	0.0
Envelope Subtotal	0	27	0	27	-
People	0	0	0	0	0.0
Lights	0	0	0	0	0.0
RA Sensible (Lights)	0	0	0	0	0.0
Miscellaneous Loads	0	0	0	0	0.0
Internal Subtotal	0	0	0	0	-
RA (All Other)	0	0	0	0	0.0
DOA Direct to Room	0	0	0	0	0.0
Ceiling	0	-373	0	-373	107.8
Refrigeration	0	0	0	0	0.0
Service Water	0	0	0	0	0.0
HVAC Equipment Losses	0	0	0	0	0.0
Adj Air Transfer Heat	0	0	0	0	0.0
Sizing Factor Correction	0	0	0	0	0.0
Time Delay Correction	0	0	0	0	0.0
Grand Total	0	-346	0	-346	100.0

Engineering Checks

Heating Mbh	-0.35	Input Ventilation cfm	14
Heating cfm	45.01	Calculated Ventilation cfm	12
ft²/Mbh	-409.54	Number of People	1.00
cfm/Mbh	-130.03	People per 1000 ft²	7
Conditioned ft²	141.8		

ROOM_02_236_OFFICE_R04

Conditions at Time of Cooling Peak

Outside	DB / WB / HR	88.3 °F	/	73.2 °F	/	99.5 gr/lb
Room	DB / RH / HR	75.0 °F	/	50.5 %	/	65.3 gr/lb

	Instant Sensible (Btu/h)	Time Delay Sensible (Btu/h)	Latent (Btu/h)	Total (Btu/h)	Percent of Total (%)
Roof	0	0	0	0	0.0
Other Roof	0	0	0	0	0.0
Glass	0	0	0	0	0.0
Door	0	1	0	1	0.0
Wall	0	0	0	0	0.0
Below-Grade Wall	0	0	0	0	0.0
Other Wall	0	0	0	0	0.0
Partition	0	-182	0	-182	-6.3
Exterior Floor	0	0	0	0	0.0
Interior Floor	0	-188	0	-188	-6.5
Slab	0	0	0	0	0.0
Other Floor	0	0	0	0	0.0
Infiltration	0	0	0	0	0.0
Envelope Subtotal	0	-369	0	-369	-
People	105	274	200	579	20.0
Lights	152	477	0	629	21.8
RA Sensible (Lights)	174	0	0	174	6.0
Miscellaneous Loads	713	961	0	1674	57.9
Internal Subtotal	1144	1712	200	3056	-
RA (All Other)	0	0	0	0	0.0
DOA Direct to Room	0	0	0	0	0.0
Ceiling	0	204	0	204	7.1
Refrigeration	0	0	0	0	0.0
Service Water	0	0	0	0	0.0
HVAC Equipment Losses	0	0	0	0	0.0
Adj Air Transfer Heat	0	0	0	0	0.0
Sizing Factor Correction	0	0	0	0	0.0
Time Delay Correction	0	-2	0	-2	-0.1
Grand Total	1144	1546	200	2889	100.0

Engineering Checks

Cooling tons	0.24	Input Ventilation cfm	14
Cooling cfm	154.44	Calculated Ventilation cfm	23
ft²/ton	616.06	Number of People	1.00
cfm/ton	641.25	People per 1000 ft²	7
Conditioned ft²	148.3		

Conditions at Time of Heating Peak

Outside	DB / WB / HR	16.4 °F	/	12.6 °F	/	5.3 gr/lb
Room	DB / RH / HR	70.0 °F	/	4.9 %	/	5.2 gr/lb

	Instant Sensible (Btu/h)	Time Delay Sensible (Btu/h)	Latent (Btu/h)	Total (Btu/h)	Percent of Total (%)
Roof	0	0	0	0	0.0
Other Roof	0	0	0	0	0.0
Glass	0	0	0	0	0.0
Door	0	-5	0	-5	1.5
Wall	0	0	0	0	0.0
Below-Grade Wall	0	0	0	0	0.0
Other Wall	0	0	0	0	0.0
Partition	0	-16	0	-16	4.6
Exterior Floor	0	0	0	0	0.0
Interior Floor	0	51	0	51	-14.1
Slab	0	0	0	0	0.0
Other Floor	0	0	0	0	0.0
Infiltration	0	0	0	0	0.0
Envelope Subtotal	0	29	0	29	-
People	0	0	0	0	0.0
Lights	0	0	0	0	0.0
RA Sensible (Lights)	0	0	0	0	0.0
Miscellaneous Loads	0	0	0	0	0.0
Internal Subtotal	0	0	0	0	-
RA (All Other)	0	0	0	0	0.0
DOA Direct to Room	0	0	0	0	0.0
Ceiling	0	-391	0	-391	108.1
Refrigeration	0	0	0	0	0.0
Service Water	0	0	0	0	0.0
HVAC Equipment Losses	0	0	0	0	0.0
Adj Air Transfer Heat	0	0	0	0	0.0
Sizing Factor Correction	0	0	0	0	0.0
Time Delay Correction	0	0	0	0	0.0
Grand Total	0	-362	0	-362	100.0

Engineering Checks

Heating Mbh	-0.36	Input Ventilation cfm	14
Heating cfm	46.33	Calculated Ventilation cfm	12
ft²/Mbh	-410.25	Number of People	1.00
cfm/Mbh	-128.13	People per 1000 ft²	7
Conditioned ft²	148.3		

ROOM_02_237_OFFICE_R03

Conditions at Time of Cooling Peak

Outside	DB / WB / HR	88.3 °F	/	73.2 °F	/	99.5 gr/lb
Room	DB / RH / HR	75.0 °F	/	50.8 %	/	65.7 gr/lb

	Instant Sensible (Btu/h)	Time Delay Sensible (Btu/h)	Latent (Btu/h)	Total (Btu/h)	Percent of Total (%)
Roof	0	0	0	0	0.0
Other Roof	0	0	0	0	0.0
Glass	0	0	0	0	0.0
Door	0	-10	0	-10	-0.4
Wall	0	0	0	0	0.0
Below-Grade Wall	0	0	0	0	0.0
Other Wall	0	0	0	0	0.0
Partition	0	-381	0	-381	-14.7
Exterior Floor	0	0	0	0	0.0
Interior Floor	0	-197	0	-197	-7.6
Slab	0	0	0	0	0.0
Other Floor	0	0	0	0	0.0
Infiltration	0	0	0	0	0.0
Envelope Subtotal	0	-588	0	-588	-
People	105	267	200	572	22.0
Lights	150	463	0	614	23.6
RA Sensible (Lights)	173	0	0	173	6.6
Miscellaneous Loads	710	939	0	1649	63.4
Internal Subtotal	1138	1669	200	3007	-
RA (All Other)	0	0	0	0	0.0
DOA Direct to Room	0	0	0	0	0.0
Ceiling	0	183	0	183	7.0
Refrigeration	0	0	0	0	0.0
Service Water	0	0	0	0	0.0
HVAC Equipment Losses	0	0	0	0	0.0
Adj Air Transfer Heat	0	0	0	0	0.0
Sizing Factor Correction	0	0	0	0	0.0
Time Delay Correction	0	-2	0	-2	-0.1
Grand Total	1138	1261	200	2599	100.0

Engineering Checks

Cooling tons	0.22	Input Ventilation cfm	14
Cooling cfm	153.52	Calculated Ventilation cfm	20
ft²/ton	678.33	Number of People	1.00
cfm/ton	708.56	People per 1000 ft²	7
Conditioned ft²	146.9		

Conditions at Time of Heating Peak

Outside	DB / WB / HR	16.4 °F	/	12.6 °F	/	5.3 gr/lb
Room	DB / RH / HR	70.0 °F	/	4.9 %	/	5.2 gr/lb

	Instant Sensible (Btu/h)	Time Delay Sensible (Btu/h)	Latent (Btu/h)	Total (Btu/h)	Percent of Total (%)
Roof	0	0	0	0	0.0
Other Roof	0	0	0	0	0.0
Glass	0	0	0	0	0.0
Door	0	-4	0	-4	1.0
Wall	0	0	0	0	0.0
Below-Grade Wall	0	0	0	0	0.0
Other Wall	0	0	0	0	0.0
Partition	0	-18	0	-18	4.8
Exterior Floor	0	0	0	0	0.0
Interior Floor	0	27	0	27	-7.1
Slab	0	0	0	0	0.0
Other Floor	0	0	0	0	0.0
Infiltration	0	0	0	0	0.0
Envelope Subtotal	0	5	0	5	-
People	0	0	0	0	0.0
Lights	0	0	0	0	0.0
RA Sensible (Lights)	0	0	0	0	0.0
Miscellaneous Loads	0	0	0	0	0.0
Internal Subtotal	0	0	0	0	-
RA (All Other)	0	0	0	0	0.0
DOA Direct to Room	0	0	0	0	0.0
Ceiling	0	-389	0	-389	101.3
Refrigeration	0	0	0	0	0.0
Service Water	0	0	0	0	0.0
HVAC Equipment Losses	0	0	0	0	0.0
Adj Air Transfer Heat	0	0	0	0	0.0
Sizing Factor Correction	0	0	0	0	0.0
Time Delay Correction	0	0	0	0	0.0
Grand Total	0	-384	0	-384	100.0

Engineering Checks

Heating Mbh	-0.38	Input Ventilation cfm	14
Heating cfm	46.06	Calculated Ventilation cfm	13
ft²/Mbh	-382.28	Number of People	1.00
cfm/Mbh	-119.82	People per 1000 ft²	7
Conditioned ft²	146.9		

ROOM_02_240_OFFICE_R03

Conditions at Time of Cooling Peak

Outside	DB / WB / HR	88.3 °F	/	73.2 °F	/	99.5 gr/lb
Room	DB / RH / HR	75.0 °F	/	50.8 %	/	65.6 gr/lb

	Instant Sensible (Btu/h)	Time Delay Sensible (Btu/h)	Latent (Btu/h)	Total (Btu/h)	Percent of Total (%)
Roof	0	0	0	0	0.0
Other Roof	0	0	0	0	0.0
Glass	0	0	0	0	0.0
Door	0	-9	0	-9	-0.3
Wall	0	0	0	0	0.0
Below-Grade Wall	0	0	0	0	0.0
Other Wall	0	0	0	0	0.0
Partition	0	-329	0	-329	-12.6
Exterior Floor	0	0	0	0	0.0
Interior Floor	0	-190	0	-190	-7.3
Slab	0	0	0	0	0.0
Other Floor	0	0	0	0	0.0
Infiltration	0	0	0	0	0.0
Envelope Subtotal	0	-528	0	-528	-
People	105	256	200	561	21.6
Lights	150	448	0	598	23.0
RA Sensible (Lights)	173	0	0	173	6.6
Miscellaneous Loads	711	906	0	1617	62.1
Internal Subtotal	1139	1610	200	2948	-
RA (All Other)	0	0	0	0	0.0
DOA Direct to Room	0	0	0	0	0.0
Ceiling	0	184	0	184	7.1
Refrigeration	0	0	0	0	0.0
Service Water	0	0	0	0	0.0
HVAC Equipment Losses	0	0	0	0	0.0
Adj Air Transfer Heat	0	0	0	0	0.0
Sizing Factor Correction	0	0	0	0	0.0
Time Delay Correction	0	-2	0	-2	-0.1
Grand Total	1139	1265	200	2603	100.0

Engineering Checks

Cooling tons	0.22	Input Ventilation cfm	14
Cooling cfm	153.61	Calculated Ventilation cfm	20
ft²/ton	677.85	Number of People	1.00
cfm/ton	707.95	People per 1000 ft²	7
Conditioned ft²	147.0		

Conditions at Time of Heating Peak

Outside	DB / WB / HR	16.4 °F	/	12.6 °F	/	5.3 gr/lb
Room	DB / RH / HR	70.0 °F	/	4.9 %	/	5.2 gr/lb

	Instant Sensible (Btu/h)	Time Delay Sensible (Btu/h)	Latent (Btu/h)	Total (Btu/h)	Percent of Total (%)
Roof	0	0	0	0	0.0
Other Roof	0	0	0	0	0.0
Glass	0	0	0	0	0.0
Door	0	1	0	1	-0.2
Wall	0	0	0	0	0.0
Below-Grade Wall	0	0	0	0	0.0
Other Wall	0	0	0	0	0.0
Partition	0	-27	0	-27	6.9
Exterior Floor	0	0	0	0	0.0
Interior Floor	0	22	0	22	-5.7
Slab	0	0	0	0	0.0
Other Floor	0	0	0	0	0.0
Infiltration	0	0	0	0	0.0
Envelope Subtotal	0	-4	0	-4	-
People	0	0	0	0	0.0
Lights	0	0	0	0	0.0
RA Sensible (Lights)	0	0	0	0	0.0
Miscellaneous Loads	0	0	0	0	0.0
Internal Subtotal	0	0	0	0	-
RA (All Other)	0	0	0	0	0.0
DOA Direct to Room	0	0	0	0	0.0
Ceiling	0	-386	0	-386	99.0
Refrigeration	0	0	0	0	0.0
Service Water	0	0	0	0	0.0
HVAC Equipment Losses	0	0	0	0	0.0
Adj Air Transfer Heat	0	0	0	0	0.0
Sizing Factor Correction	0	0	0	0	0.0
Time Delay Correction	0	0	0	0	0.0
Grand Total	0	-390	0	-390	100.0

Engineering Checks

Heating Mbh	-0.39	Input Ventilation cfm	14
Heating cfm	46.08	Calculated Ventilation cfm	13
ft²/Mbh	-376.67	Number of People	1.00
cfm/Mbh	-118.04	People per 1000 ft²	7
Conditioned ft²	147.0		

ROOM_02_240A_COMM STAIR_R04

Conditions at Time of Cooling Peak

Outside	DB / WB / HR	88.3 °F	/	73.2 °F	/	99.5 gr/lb
Room	DB / RH / HR	81.0 °F	/	39.9 %	/	62.8 gr/lb

	Instant Sensible (Btu/h)	Time Delay Sensible (Btu/h)	Latent (Btu/h)	Total (Btu/h)	Percent of Total (%)
Roof	0	0	0	0	0.0
Other Roof	0	0	0	0	0.0
Glass	-5	138	0	133	11.7
Door	0	0	0	0	0.0
Wall	0	0	0	0	0.0
Below-Grade Wall	0	0	0	0	0.0
Other Wall	0	0	0	0	0.0
Partition	0	-70	0	-70	-6.2
Exterior Floor	0	0	0	0	0.0
Interior Floor	0	-178	0	-178	-15.7
Slab	0	0	0	0	0.0
Other Floor	0	0	0	0	0.0
Infiltration	0	0	0	0	0.0
Envelope Subtotal	-5	-110	0	-115	-
People	0	0	0	0	0.0
Lights	178	367	0	544	48.1
RA Sensible (Lights)	204	0	0	204	18.1
Miscellaneous Loads	0	0	0	0	0.0
Internal Subtotal	382	367	0	749	-
RA (All Other)	0	0	0	0	0.0
DOA Direct to Room	0	0	0	0	0.0
Ceiling	0	543	0	543	48.0
Refrigeration	0	0	0	0	0.0
Service Water	0	0	0	0	0.0
HVAC Equipment Losses	0	0	0	0	0.0
Adj Air Transfer Heat	0	0	0	0	0.0
Sizing Factor Correction	0	0	0	0	0.0
Time Delay Correction	0	-46	0	-46	-4.0
Grand Total	377	754	0	1131	100.0

Engineering Checks

Cooling tons	0.09	Input Ventilation cfm	0
Cooling cfm	95.30	Calculated Ventilation cfm	14
ft²/ton	2969.16	Number of People	0.00
cfm/ton	1,011.20	People per 1000 ft²	0
Conditioned ft²	279.8		

Conditions at Time of Heating Peak

Outside	DB / WB / HR	16.4 °F	/	12.6 °F	/	5.3 gr/lb
Room	DB / RH / HR	70.0 °F	/	4.9 %	/	5.2 gr/lb

	Instant Sensible (Btu/h)	Time Delay Sensible (Btu/h)	Latent (Btu/h)	Total (Btu/h)	Percent of Total (%)
Roof	0	0	0	0	0.0
Other Roof	0	0	0	0	0.0
Glass	-65	0	0	-65	8.5
Door	0	0	0	0	0.0
Wall	0	0	0	0	0.0
Below-Grade Wall	0	0	0	0	0.0
Other Wall	0	0	0	0	0.0
Partition	0	-64	0	-64	8.3
Exterior Floor	0	0	0	0	0.0
Interior Floor	0	119	0	119	-15.4
Slab	0	0	0	0	0.0
Other Floor	0	0	0	0	0.0
Infiltration	0	0	0	0	0.0
Envelope Subtotal	-65	55	0	-10	-
People	0	0	0	0	0.0
Lights	0	0	0	0	0.0
RA Sensible (Lights)	0	0	0	0	0.0
Miscellaneous Loads	0	0	0	0	0.0
Internal Subtotal	0	0	0	0	-
RA (All Other)	0	0	0	0	0.0
DOA Direct to Room	0	0	0	0	0.0
Ceiling	0	-759	0	-759	98.6
Refrigeration	0	0	0	0	0.0
Service Water	0	0	0	0	0.0
HVAC Equipment Losses	0	0	0	0	0.0
Adj Air Transfer Heat	0	0	0	0	0.0
Sizing Factor Correction	0	0	0	0	0.0
Time Delay Correction	0	0	0	0	0.0
Grand Total	-65	-704	0	-770	100.0

Engineering Checks

Heating Mbh	-0.77	Input Ventilation cfm	0
Heating cfm	28.59	Calculated Ventilation cfm	8
ft²/Mbh	-363.58	Number of People	0.00
cfm/Mbh	-37.15	People per 1000 ft²	0
Conditioned ft²	279.8		

ROOM_02_240A_CORRIDOR_R03

Conditions at Time of Cooling Peak

Outside	DB / WB / HR	88.3 °F	/	73.2 °F	/	99.5 gr/lb
Room	DB / RH / HR	81.0 °F	/	39.9 %	/	62.8 gr/lb

	Instant Sensible (Btu/h)	Time Delay Sensible (Btu/h)	Latent (Btu/h)	Total (Btu/h)	Percent of Total (%)
Roof	0	0	0	0	0.0
Other Roof	0	0	0	0	0.0
Glass	28	117	0	144	38.5
Door	0	-79	0	-79	-21.0
Wall	0	0	0	0	0.0
Below-Grade Wall	0	0	0	0	0.0
Other Wall	0	0	0	0	0.0
Partition	0	-305	0	-305	-81.2
Exterior Floor	0	0	0	0	0.0
Interior Floor	0	-77	0	-77	-20.6
Slab	0	0	0	0	0.0
Other Floor	0	0	0	0	0.0
Infiltration	0	0	0	0	0.0
Envelope Subtotal	28	-344	0	-316	-
People	0	0	0	0	0.0
Lights	100	189	0	289	77.0
RA Sensible (Lights)	115	0	0	115	30.7
Miscellaneous Loads	0	0	0	0	0.0
Internal Subtotal	216	189	0	404	-
RA (All Other)	0	0	0	0	0.0
DOA Direct to Room	0	0	0	0	0.0
Ceiling	0	298	0	298	79.4
Refrigeration	0	0	0	0	0.0
Service Water	0	0	0	0	0.0
HVAC Equipment Losses	0	0	0	0	0.0
Adj Air Transfer Heat	0	0	0	0	0.0
Sizing Factor Correction	0	0	0	0	0.0
Time Delay Correction	0	-11	0	-11	-2.8
Grand Total	244	132	0	375	100.0

Engineering Checks

Cooling tons	0.03	Input Ventilation cfm	10
Cooling cfm	110.12	Calculated Ventilation cfm	16
ft²/ton	5282.70	Number of People	0.00
cfm/ton	3,519.67	People per 1000 ft²	0
Conditioned ft²	165.2		

Conditions at Time of Heating Peak

Outside	DB / WB / HR	16.4 °F	/	12.6 °F	/	5.3 gr/lb
Room	DB / RH / HR	70.0 °F	/	4.9 %	/	5.2 gr/lb

	Instant Sensible (Btu/h)	Time Delay Sensible (Btu/h)	Latent (Btu/h)	Total (Btu/h)	Percent of Total (%)
Roof	0	0	0	0	0.0
Other Roof	0	0	0	0	0.0
Glass	-78	0	0	-78	16.2
Door	0	3	0	3	-0.6
Wall	0	0	0	0	0.0
Below-Grade Wall	0	0	0	0	0.0
Other Wall	0	0	0	0	0.0
Partition	0	13	0	13	-2.6
Exterior Floor	0	0	0	0	0.0
Interior Floor	0	22	0	22	-4.6
Slab	0	0	0	0	0.0
Other Floor	0	0	0	0	0.0
Infiltration	0	0	0	0	0.0
Envelope Subtotal	-78	38	0	-40	-
People	0	0	0	0	0.0
Lights	0	0	0	0	0.0
RA Sensible (Lights)	0	0	0	0	0.0
Miscellaneous Loads	0	0	0	0	0.0
Internal Subtotal	0	0	0	0	-
RA (All Other)	0	0	0	0	0.0
DOA Direct to Room	0	0	0	0	0.0
Ceiling	0	-444	0	-444	91.7
Refrigeration	0	0	0	0	0.0
Service Water	0	0	0	0	0.0
HVAC Equipment Losses	0	0	0	0	0.0
Adj Air Transfer Heat	0	0	0	0	0.0
Sizing Factor Correction	0	0	0	0	0.0
Time Delay Correction	0	0	0	0	0.0
Grand Total	-78	-406	0	-484	100.0

Engineering Checks

Heating Mbh	-0.48	Input Ventilation cfm	10
Heating cfm	33.04	Calculated Ventilation cfm	9
ft²/Mbh	-341.44	Number of People	0.00
cfm/Mbh	-68.26	People per 1000 ft²	0
Conditioned ft²	165.2		

ROOM_02_240B_COMM STAIR_R04

Conditions at Time of Cooling Peak

Outside	DB / WB / HR	88.3 °F	/	73.2 °F	/	99.5 gr/lb
Room	DB / RH / HR	81.0 °F	/	39.9 %	/	62.8 gr/lb

	Instant Sensible (Btu/h)	Time Delay Sensible (Btu/h)	Latent (Btu/h)	Total (Btu/h)	Percent of Total (%)
Roof	0	0	0	0	0.0
Other Roof	0	0	0	0	0.0
Glass	53	123	0	175	18.0
Door	0	0	0	0	0.0
Wall	0	0	0	0	0.0
Below-Grade Wall	0	0	0	0	0.0
Other Wall	0	0	0	0	0.0
Partition	0	-110	0	-110	-11.3
Exterior Floor	0	0	0	0	0.0
Interior Floor	0	-174	0	-174	-17.9
Slab	0	0	0	0	0.0
Other Floor	0	0	0	0	0.0
Infiltration	0	0	0	0	0.0
Envelope Subtotal	53	-161	0	-108	-
People	0	0	0	0	0.0
Lights	164	304	0	469	48.2
RA Sensible (Lights)	189	0	0	189	19.4
Miscellaneous Loads	0	0	0	0	0.0
Internal Subtotal	353	304	0	657	-
RA (All Other)	0	0	0	0	0.0
DOA Direct to Room	0	0	0	0	0.0
Ceiling	0	465	0	465	47.8
Refrigeration	0	0	0	0	0.0
Service Water	0	0	0	0	0.0
HVAC Equipment Losses	0	0	0	0	0.0
Adj Air Transfer Heat	0	0	0	0	0.0
Sizing Factor Correction	0	0	0	0	0.0
Time Delay Correction	0	-42	0	-42	-4.3
Grand Total	405	567	0	972	100.0

Engineering Checks

Cooling tons	0.08	Input Ventilation cfm	0
Cooling cfm	86.54	Calculated Ventilation cfm	13
ft²/ton	3190.54	Number of People	0.00
cfm/ton	1,067.99	People per 1000 ft²	0
Conditioned ft²	258.4		

Conditions at Time of Heating Peak

Outside	DB / WB / HR	16.4 °F	/	12.6 °F	/	5.3 gr/lb
Room	DB / RH / HR	70.0 °F	/	4.9 %	/	5.2 gr/lb

	Instant Sensible (Btu/h)	Time Delay Sensible (Btu/h)	Latent (Btu/h)	Total (Btu/h)	Percent of Total (%)
Roof	0	0	0	0	0.0
Other Roof	0	0	0	0	0.0
Glass	-88	0	0	-88	12.6
Door	0	0	0	0	0.0
Wall	0	0	0	0	0.0
Below-Grade Wall	0	0	0	0	0.0
Other Wall	0	0	0	0	0.0
Partition	0	-5	0	-5	0.8
Exterior Floor	0	0	0	0	0.0
Interior Floor	0	62	0	62	-8.8
Slab	0	0	0	0	0.0
Other Floor	0	0	0	0	0.0
Infiltration	0	0	0	0	0.0
Envelope Subtotal	-88	56	0	-32	-
People	0	0	0	0	0.0
Lights	0	0	0	0	0.0
RA Sensible (Lights)	0	0	0	0	0.0
Miscellaneous Loads	0	0	0	0	0.0
Internal Subtotal	0	0	0	0	-
RA (All Other)	0	0	0	0	0.0
DOA Direct to Room	0	0	0	0	0.0
Ceiling	0	-667	0	-667	95.5
Refrigeration	0	0	0	0	0.0
Service Water	0	0	0	0	0.0
HVAC Equipment Losses	0	0	0	0	0.0
Adj Air Transfer Heat	0	0	0	0	0.0
Sizing Factor Correction	0	0	0	0	0.0
Time Delay Correction	0	0	0	0	0.0
Grand Total	-88	-611	0	-699	100.0

Engineering Checks

Heating Mbh	-0.70	Input Ventilation cfm	0
Heating cfm	25.96	Calculated Ventilation cfm	7
ft²/Mbh	-369.92	Number of People	0.00
cfm/Mbh	-37.16	People per 1000 ft²	0
Conditioned ft²	258.4		

ROOM_02_240C_BRIDGE_R04

Conditions at Time of Cooling Peak

Outside	DB / WB / HR	88.9 °F	/	73.4 °F	/	99.5 gr/lb
Room	DB / RH / HR	81.0 °F	/	39.9 %	/	62.8 gr/lb

	Instant Sensible (Btu/h)	Time Delay Sensible (Btu/h)	Latent (Btu/h)	Total (Btu/h)	Percent of Total (%)
Roof	0	0	0	0	0.0
Other Roof	0	0	0	0	0.0
Glass	206	235	0	441	28.0
Door	0	-8	0	-8	-0.5
Wall	0	0	0	0	0.0
Below-Grade Wall	0	0	0	0	0.0
Other Wall	0	0	0	0	0.0
Partition	0	-78	0	-78	-5.0
Exterior Floor	0	0	0	0	0.0
Interior Floor	0	-303	0	-303	-19.2
Slab	0	0	0	0	0.0
Other Floor	0	0	0	0	0.0
Infiltration	0	0	0	0	0.0
Envelope Subtotal	206	-154	0	52	-
People	0	0	0	0	0.0
Lights	225	465	0	690	43.8
RA Sensible (Lights)	258	0	0	258	16.4
Miscellaneous Loads	0	0	0	0	0.0
Internal Subtotal	483	465	0	948	-
RA (All Other)	0	0	0	0	0.0
DOA Direct to Room	0	0	0	0	0.0
Ceiling	0	689	0	689	43.7
Refrigeration	0	0	0	0	0.0
Service Water	0	0	0	0	0.0
HVAC Equipment Losses	0	0	0	0	0.0
Adj Air Transfer Heat	0	0	0	0	0.0
Sizing Factor Correction	0	0	0	0	0.0
Time Delay Correction	0	-114	0	-114	-7.2
Grand Total	690	885	0	1575	100.0

Engineering Checks

Cooling tons	0.13	Input Ventilation cfm	22
Cooling cfm	246.65	Calculated Ventilation cfm	36
ft²/ton	2819.28	Number of People	0.00
cfm/ton	1,879.07	People per 1000 ft²	0
Conditioned ft²	370.0		

Conditions at Time of Heating Peak

Outside	DB / WB / HR	16.4 °F	/	12.6 °F	/	5.3 gr/lb
Room	DB / RH / HR	70.0 °F	/	4.9 %	/	5.2 gr/lb

	Instant Sensible (Btu/h)	Time Delay Sensible (Btu/h)	Latent (Btu/h)	Total (Btu/h)	Percent of Total (%)
Roof	0	0	0	0	0.0
Other Roof	0	0	0	0	0.0
Glass	-47	0	0	-47	3.1
Door	0	-47	0	-47	3.2
Wall	0	0	0	0	0.0
Below-Grade Wall	0	0	0	0	0.0
Other Wall	0	0	0	0	0.0
Partition	0	-346	0	-346	23.1
Exterior Floor	0	0	0	0	0.0
Interior Floor	0	-12	0	-12	0.8
Slab	0	0	0	0	0.0
Other Floor	0	0	0	0	0.0
Infiltration	0	0	0	0	0.0
Envelope Subtotal	-47	-405	0	-451	-
People	0	0	0	0	0.0
Lights	0	0	0	0	0.0
RA Sensible (Lights)	0	0	0	0	0.0
Miscellaneous Loads	0	0	0	0	0.0
Internal Subtotal	0	0	0	0	-
RA (All Other)	0	0	0	0	0.0
DOA Direct to Room	0	0	0	0	0.0
Ceiling	0	-1045	0	-1045	69.8
Refrigeration	0	0	0	0	0.0
Service Water	0	0	0	0	0.0
HVAC Equipment Losses	0	0	0	0	0.0
Adj Air Transfer Heat	0	0	0	0	0.0
Sizing Factor Correction	0	0	0	0	0.0
Time Delay Correction	0	0	0	0	0.0
Grand Total	-47	-1449	0	-1496	100.0

Engineering Checks

Heating Mbh	-1.50	Input Ventilation cfm	22
Heating cfm	74.00	Calculated Ventilation cfm	19
ft²/Mbh	-247.31	Number of People	0.00
cfm/Mbh	-49.46	People per 1000 ft²	0
Conditioned ft²	370.0		

ROOM_02_241_OFFICE_R03

Conditions at Time of Cooling Peak

Outside	DB / WB / HR	87.8 °F	/	73.1 °F	/	99.5 gr/lb
Room	DB / RH / HR	75.0 °F	/	50.8 %	/	65.7 gr/lb

	Instant Sensible (Btu/h)	Time Delay Sensible (Btu/h)	Latent (Btu/h)	Total (Btu/h)	Percent of Total (%)
Roof	0	0	0	0	0.0
Other Roof	0	0	0	0	0.0
Glass	0	0	0	0	0.0
Door	0	-8	0	-8	-0.3
Wall	0	0	0	0	0.0
Below-Grade Wall	0	0	0	0	0.0
Other Wall	0	0	0	0	0.0
Partition	0	-368	0	-368	-14.6
Exterior Floor	0	0	0	0	0.0
Interior Floor	0	-205	0	-205	-8.1
Slab	0	0	0	0	0.0
Other Floor	0	0	0	0	0.0
Infiltration	0	0	0	0	0.0
Envelope Subtotal	0	-582	0	-582	-
People	105	262	200	567	22.4
Lights	148	445	0	593	23.5
RA Sensible (Lights)	170	0	0	170	6.7
Miscellaneous Loads	705	910	0	1616	63.9
Internal Subtotal	1128	1617	200	2945	-
RA (All Other)	0	0	0	0	0.0
DOA Direct to Room	0	0	0	0	0.0
Ceiling	0	165	0	165	6.5
Refrigeration	0	0	0	0	0.0
Service Water	0	0	0	0	0.0
HVAC Equipment Losses	0	0	0	0	0.0
Adj Air Transfer Heat	0	0	0	0	0.0
Sizing Factor Correction	0	0	0	0	0.0
Time Delay Correction	0	-2	0	-2	-0.1
Grand Total	1128	1200	200	2527	100.0

Engineering Checks

Cooling tons	0.21	Input Ventilation cfm	14
Cooling cfm	151.89	Calculated Ventilation cfm	19
ft²/ton	685.92	Number of People	1.00
cfm/ton	721.04	People per 1000 ft²	7
Conditioned ft²	144.5		

Conditions at Time of Heating Peak

Outside	DB / WB / HR	16.4 °F	/	12.6 °F	/	5.3 gr/lb
Room	DB / RH / HR	70.0 °F	/	4.9 %	/	5.2 gr/lb

	Instant Sensible (Btu/h)	Time Delay Sensible (Btu/h)	Latent (Btu/h)	Total (Btu/h)	Percent of Total (%)
Roof	0	0	0	0	0.0
Other Roof	0	0	0	0	0.0
Glass	0	0	0	0	0.0
Door	0	0	0	0	0.0
Wall	0	0	0	0	0.0
Below-Grade Wall	0	0	0	0	0.0
Other Wall	0	0	0	0	0.0
Partition	0	-6	0	-6	1.7
Exterior Floor	0	0	0	0	0.0
Interior Floor	0	29	0	29	-8.2
Slab	0	0	0	0	0.0
Other Floor	0	0	0	0	0.0
Infiltration	0	0	0	0	0.0
Envelope Subtotal	0	23	0	23	-
People	0	0	0	0	0.0
Lights	0	0	0	0	0.0
RA Sensible (Lights)	0	0	0	0	0.0
Miscellaneous Loads	0	0	0	0	0.0
Internal Subtotal	0	0	0	0	-
RA (All Other)	0	0	0	0	0.0
DOA Direct to Room	0	0	0	0	0.0
Ceiling	0	-373	0	-373	106.5
Refrigeration	0	0	0	0	0.0
Service Water	0	0	0	0	0.0
HVAC Equipment Losses	0	0	0	0	0.0
Adj Air Transfer Heat	0	0	0	0	0.0
Sizing Factor Correction	0	0	0	0	0.0
Time Delay Correction	0	0	0	0	0.0
Grand Total	0	-350	0	-350	100.0

Engineering Checks

Heating Mbh	-0.35	Input Ventilation cfm	14
Heating cfm	45.57	Calculated Ventilation cfm	13
ft²/Mbh	-412.46	Number of People	1.00
cfm/Mbh	-130.09	People per 1000 ft²	7
Conditioned ft²	144.5		

ROOM_02_242_OFFICE_R03

Conditions at Time of Cooling Peak

Outside	DB / WB / HR	87.8 °F	/	73.1 °F	/	99.5 gr/lb
Room	DB / RH / HR	75.0 °F	/	50.8 %	/	65.7 gr/lb

	Instant Sensible (Btu/h)	Time Delay Sensible (Btu/h)	Latent (Btu/h)	Total (Btu/h)	Percent of Total (%)
Roof	0	0	0	0	0.0
Other Roof	0	0	0	0	0.0
Glass	0	0	0	0	0.0
Door	0	-8	0	-8	-0.3
Wall	0	0	0	0	0.0
Below-Grade Wall	0	0	0	0	0.0
Other Wall	0	0	0	0	0.0
Partition	0	-364	0	-364	-14.3
Exterior Floor	0	0	0	0	0.0
Interior Floor	0	-198	0	-198	-7.8
Slab	0	0	0	0	0.0
Other Floor	0	0	0	0	0.0
Infiltration	0	0	0	0	0.0
Envelope Subtotal	0	-570	0	-570	-
People	105	260	200	565	22.2
Lights	150	447	0	596	23.4
RA Sensible (Lights)	172	0	0	172	6.8
Miscellaneous Loads	710	906	0	1615	63.4
Internal Subtotal	1137	1612	200	2949	-
RA (All Other)	0	0	0	0	0.0
DOA Direct to Room	0	0	0	0	0.0
Ceiling	0	172	0	172	6.8
Refrigeration	0	0	0	0	0.0
Service Water	0	0	0	0	0.0
HVAC Equipment Losses	0	0	0	0	0.0
Adj Air Transfer Heat	0	0	0	0	0.0
Sizing Factor Correction	0	0	0	0	0.0
Time Delay Correction	0	-2	0	-2	-0.1
Grand Total	1137	1213	200	2550	100.0

Engineering Checks

Cooling tons	0.21	Input Ventilation cfm	14
Cooling cfm	153.31	Calculated Ventilation cfm	19
ft²/ton	690.06	Number of People	1.00
cfm/ton	721.39	People per 1000 ft²	7
Conditioned ft²	146.6		

Conditions at Time of Heating Peak

Outside	DB / WB / HR	16.4 °F	/	12.6 °F	/	5.3 gr/lb
Room	DB / RH / HR	70.0 °F	/	4.9 %	/	5.2 gr/lb

	Instant Sensible (Btu/h)	Time Delay Sensible (Btu/h)	Latent (Btu/h)	Total (Btu/h)	Percent of Total (%)
Roof	0	0	0	0	0.0
Other Roof	0	0	0	0	0.0
Glass	0	0	0	0	0.0
Door	0	0	0	0	0.0
Wall	0	0	0	0	0.0
Below-Grade Wall	0	0	0	0	0.0
Other Wall	0	0	0	0	0.0
Partition	0	-3	0	-3	0.8
Exterior Floor	0	0	0	0	0.0
Interior Floor	0	29	0	29	-8.2
Slab	0	0	0	0	0.0
Other Floor	0	0	0	0	0.0
Infiltration	0	0	0	0	0.0
Envelope Subtotal	0	26	0	26	-
People	0	0	0	0	0.0
Lights	0	0	0	0	0.0
RA Sensible (Lights)	0	0	0	0	0.0
Miscellaneous Loads	0	0	0	0	0.0
Internal Subtotal	0	0	0	0	-
RA (All Other)	0	0	0	0	0.0
DOA Direct to Room	0	0	0	0	0.0
Ceiling	0	-378	0	-378	107.5
Refrigeration	0	0	0	0	0.0
Service Water	0	0	0	0	0.0
HVAC Equipment Losses	0	0	0	0	0.0
Adj Air Transfer Heat	0	0	0	0	0.0
Sizing Factor Correction	0	0	0	0	0.0
Time Delay Correction	0	0	0	0	0.0
Grand Total	0	-352	0	-352	100.0

Engineering Checks

Heating Mbh	-0.35	Input Ventilation cfm	14
Heating cfm	45.99	Calculated Ventilation cfm	13
ft²/Mbh	-416.75	Number of People	1.00
cfm/Mbh	-130.73	People per 1000 ft²	7
Conditioned ft²	146.6		

ROOM_02_243_OFFICE_R03

Conditions at Time of Cooling Peak

Outside	DB / WB / HR	87.8 °F	/	73.1 °F	/	99.5 gr/lb
Room	DB / RH / HR	75.0 °F	/	50.8 %	/	65.6 gr/lb

	Instant Sensible (Btu/h)	Time Delay Sensible (Btu/h)	Latent (Btu/h)	Total (Btu/h)	Percent of Total (%)
Roof	0	0	0	0	0.0
Other Roof	0	0	0	0	0.0
Glass	0	0	0	0	0.0
Door	0	-9	0	-9	-0.3
Wall	0	0	0	0	0.0
Below-Grade Wall	0	0	0	0	0.0
Other Wall	0	0	0	0	0.0
Partition	0	-261	0	-261	-10.0
Exterior Floor	0	0	0	0	0.0
Interior Floor	0	-191	0	-191	-7.3
Slab	0	0	0	0	0.0
Other Floor	0	0	0	0	0.0
Infiltration	0	0	0	0	0.0
Envelope Subtotal	0	-461	0	-461	-
People	105	257	200	562	21.6
Lights	146	428	0	574	22.0
RA Sensible (Lights)	167	0	0	167	6.4
Miscellaneous Loads	701	883	0	1584	60.8
Internal Subtotal	1119	1568	200	2887	-
RA (All Other)	0	0	0	0	0.0
DOA Direct to Room	0	0	0	0	0.0
Ceiling	0	180	0	180	6.9
Refrigeration	0	0	0	0	0.0
Service Water	0	0	0	0	0.0
HVAC Equipment Losses	0	0	0	0	0.0
Adj Air Transfer Heat	0	0	0	0	0.0
Sizing Factor Correction	0	0	0	0	0.0
Time Delay Correction	0	-2	0	-2	-0.1
Grand Total	1119	1285	200	2604	100.0

Engineering Checks

Cooling tons	0.22	Input Ventilation cfm	14
Cooling cfm	150.47	Calculated Ventilation cfm	19
ft²/ton	656.30	Number of People	1.00
cfm/ton	693.28	People per 1000 ft²	7
Conditioned ft²	142.4		

Conditions at Time of Heating Peak

Outside	DB / WB / HR	16.4 °F	/	12.6 °F	/	5.3 gr/lb
Room	DB / RH / HR	70.0 °F	/	4.9 %	/	5.2 gr/lb

	Instant Sensible (Btu/h)	Time Delay Sensible (Btu/h)	Latent (Btu/h)	Total (Btu/h)	Percent of Total (%)
Roof	0	0	0	0	0.0
Other Roof	0	0	0	0	0.0
Glass	0	0	0	0	0.0
Door	0	0	0	0	-0.1
Wall	0	0	0	0	0.0
Below-Grade Wall	0	0	0	0	0.0
Other Wall	0	0	0	0	0.0
Partition	0	-17	0	-17	4.6
Exterior Floor	0	0	0	0	0.0
Interior Floor	0	26	0	26	-7.2
Slab	0	0	0	0	0.0
Other Floor	0	0	0	0	0.0
Infiltration	0	0	0	0	0.0
Envelope Subtotal	0	10	0	10	-
People	0	0	0	0	0.0
Lights	0	0	0	0	0.0
RA Sensible (Lights)	0	0	0	0	0.0
Miscellaneous Loads	0	0	0	0	0.0
Internal Subtotal	0	0	0	0	-
RA (All Other)	0	0	0	0	0.0
DOA Direct to Room	0	0	0	0	0.0
Ceiling	0	-374	0	-374	102.7
Refrigeration	0	0	0	0	0.0
Service Water	0	0	0	0	0.0
HVAC Equipment Losses	0	0	0	0	0.0
Adj Air Transfer Heat	0	0	0	0	0.0
Sizing Factor Correction	0	0	0	0	0.0
Time Delay Correction	0	0	0	0	0.0
Grand Total	0	-364	0	-364	100.0

Engineering Checks

Heating Mbh	-0.36	Input Ventilation cfm	14
Heating cfm	45.14	Calculated Ventilation cfm	13
ft²/Mbh	-390.78	Number of People	1.00
cfm/Mbh	-123.86	People per 1000 ft²	7
Conditioned ft²	142.4		

ROOM_02_244_OFFICE_R03

Conditions at Time of Cooling Peak

Outside	DB / WB / HR	88.3 °F	/	73.2 °F	/	99.5 gr/lb
Room	DB / RH / HR	75.0 °F	/	50.6 %	/	65.5 gr/lb

	Instant Sensible (Btu/h)	Time Delay Sensible (Btu/h)	Latent (Btu/h)	Total (Btu/h)	Percent of Total (%)
Roof	0	0	0	0	0.0
Other Roof	0	0	0	0	0.0
Glass	0	0	0	0	0.0
Door	0	-11	0	-11	-0.4
Wall	0	0	0	0	0.0
Below-Grade Wall	0	0	0	0	0.0
Other Wall	0	0	0	0	0.0
Partition	0	-147	0	-147	-5.3
Exterior Floor	0	0	0	0	0.0
Interior Floor	0	-193	0	-193	-7.0
Slab	0	0	0	0	0.0
Other Floor	0	0	0	0	0.0
Infiltration	0	0	0	0	0.0
Envelope Subtotal	0	-351	0	-351	-
People	105	249	200	553	20.0
Lights	152	434	0	586	21.2
RA Sensible (Lights)	175	0	0	175	6.3
Miscellaneous Loads	714	873	0	1587	57.4
Internal Subtotal	1146	1555	200	2901	-
RA (All Other)	0	0	0	0	0.0
DOA Direct to Room	0	0	0	0	0.0
Ceiling	0	218	0	218	7.9
Refrigeration	0	0	0	0	0.0
Service Water	0	0	0	0	0.0
HVAC Equipment Losses	0	0	0	0	0.0
Adj Air Transfer Heat	0	0	0	0	0.0
Sizing Factor Correction	0	0	0	0	0.0
Time Delay Correction	0	-2	0	-2	-0.1
Grand Total	1146	1420	200	2766	100.0

Engineering Checks

Cooling tons	0.23	Input Ventilation cfm	14
Cooling cfm	154.72	Calculated Ventilation cfm	20
ft²/ton	645.45	Number of People	1.00
cfm/ton	671.15	People per 1000 ft²	7
Conditioned ft²	148.8		

Conditions at Time of Heating Peak

Outside	DB / WB / HR	16.4 °F	/	12.6 °F	/	5.3 gr/lb
Room	DB / RH / HR	70.0 °F	/	4.9 %	/	5.2 gr/lb

	Instant Sensible (Btu/h)	Time Delay Sensible (Btu/h)	Latent (Btu/h)	Total (Btu/h)	Percent of Total (%)
Roof	0	0	0	0	0.0
Other Roof	0	0	0	0	0.0
Glass	0	0	0	0	0.0
Door	0	-3	0	-3	0.7
Wall	0	0	0	0	0.0
Below-Grade Wall	0	0	0	0	0.0
Other Wall	0	0	0	0	0.0
Partition	0	-46	0	-46	10.8
Exterior Floor	0	0	0	0	0.0
Interior Floor	0	21	0	21	-4.8
Slab	0	0	0	0	0.0
Other Floor	0	0	0	0	0.0
Infiltration	0	0	0	0	0.0
Envelope Subtotal	0	-29	0	-29	-
People	0	0	0	0	0.0
Lights	0	0	0	0	0.0
RA Sensible (Lights)	0	0	0	0	0.0
Miscellaneous Loads	0	0	0	0	0.0
Internal Subtotal	0	0	0	0	-
RA (All Other)	0	0	0	0	0.0
DOA Direct to Room	0	0	0	0	0.0
Ceiling	0	-402	0	-402	93.3
Refrigeration	0	0	0	0	0.0
Service Water	0	0	0	0	0.0
HVAC Equipment Losses	0	0	0	0	0.0
Adj Air Transfer Heat	0	0	0	0	0.0
Sizing Factor Correction	0	0	0	0	0.0
Time Delay Correction	0	0	0	0	0.0
Grand Total	0	-431	0	-431	100.0

Engineering Checks

Heating Mbh	-0.43	Input Ventilation cfm	14
Heating cfm	46.42	Calculated Ventilation cfm	13
ft²/Mbh	-345.12	Number of People	1.00
cfm/Mbh	-107.68	People per 1000 ft²	7
Conditioned ft²	148.8		

ROOM_02_245_OFFICE_R03

Conditions at Time of Cooling Peak

Outside	DB / WB / HR	88.3 °F	/	73.2 °F	/	99.5 gr/lb
Room	DB / RH / HR	75.0 °F	/	50.6 %	/	65.4 gr/lb

	Instant Sensible (Btu/h)	Time Delay Sensible (Btu/h)	Latent (Btu/h)	Total (Btu/h)	Percent of Total (%)
Roof	0	0	0	0	0.0
Other Roof	0	0	0	0	0.0
Glass	0	0	0	0	0.0
Door	0	-12	0	-12	-0.4
Wall	0	0	0	0	0.0
Below-Grade Wall	0	0	0	0	0.0
Other Wall	0	0	0	0	0.0
Partition	0	-97	0	-97	-3.5
Exterior Floor	0	0	0	0	0.0
Interior Floor	0	-164	0	-164	-5.9
Slab	0	0	0	0	0.0
Other Floor	0	0	0	0	0.0
Infiltration	0	0	0	0	0.0
Envelope Subtotal	0	-272	0	-272	-
People	105	255	200	560	20.1
Lights	143	421	0	563	20.2
RA Sensible (Lights)	164	0	0	164	5.9
Miscellaneous Loads	695	878	0	1573	56.5
Internal Subtotal	1106	1554	200	2860	-
RA (All Other)	0	0	0	0	0.0
DOA Direct to Room	0	0	0	0	0.0
Ceiling	0	198	0	198	7.1
Refrigeration	0	0	0	0	0.0
Service Water	0	0	0	0	0.0
HVAC Equipment Losses	0	0	0	0	0.0
Adj Air Transfer Heat	0	0	0	0	0.0
Sizing Factor Correction	0	0	0	0	0.0
Time Delay Correction	0	-2	0	-2	-0.1
Grand Total	1106	1478	200	2785	100.0

Engineering Checks

Cooling tons	0.23	Input Ventilation cfm	13
Cooling cfm	148.55	Calculated Ventilation cfm	19
ft²/ton	601.23	Number of People	1.00
cfm/ton	640.04	People per 1000 ft²	7
Conditioned ft²	139.5		

Conditions at Time of Heating Peak

Outside	DB / WB / HR	16.4 °F	/	12.6 °F	/	5.3 gr/lb
Room	DB / RH / HR	70.0 °F	/	4.9 %	/	5.2 gr/lb

	Instant Sensible (Btu/h)	Time Delay Sensible (Btu/h)	Latent (Btu/h)	Total (Btu/h)	Percent of Total (%)
Roof	0	0	0	0	0.0
Other Roof	0	0	0	0	0.0
Glass	0	0	0	0	0.0
Door	0	-3	0	-3	1.9
Wall	0	0	0	0	0.0
Below-Grade Wall	0	0	0	0	0.0
Other Wall	0	0	0	0	0.0
Partition	0	159	0	159	-93.3
Exterior Floor	0	0	0	0	0.0
Interior Floor	0	39	0	39	-23.0
Slab	0	0	0	0	0.0
Other Floor	0	0	0	0	0.0
Infiltration	0	0	0	0	0.0
Envelope Subtotal	0	196	0	196	-
People	0	0	0	0	0.0
Lights	0	0	0	0	0.0
RA Sensible (Lights)	0	0	0	0	0.0
Miscellaneous Loads	0	0	0	0	0.0
Internal Subtotal	0	0	0	0	-
RA (All Other)	0	0	0	0	0.0
DOA Direct to Room	0	0	0	0	0.0
Ceiling	0	-366	0	-366	214.4
Refrigeration	0	0	0	0	0.0
Service Water	0	0	0	0	0.0
HVAC Equipment Losses	0	0	0	0	0.0
Adj Air Transfer Heat	0	0	0	0	0.0
Sizing Factor Correction	0	0	0	0	0.0
Time Delay Correction	0	0	0	0	0.0
Grand Total	0	-171	0	-171	100.0

Engineering Checks

Heating Mbh	-0.17	Input Ventilation cfm	13
Heating cfm	44.56	Calculated Ventilation cfm	13
ft²/Mbh	-816.30	Number of People	1.00
cfm/Mbh	-260.75	People per 1000 ft²	7
Conditioned ft²	139.5		

ROOM_02_246_OFFICE_R03

Conditions at Time of Cooling Peak

Outside	DB / WB / HR	87.8 °F	/	73.1 °F	/	99.5 gr/lb
Room	DB / RH / HR	75.0 °F	/	50.7 %	/	65.6 gr/lb

	Instant Sensible (Btu/h)	Time Delay Sensible (Btu/h)	Latent (Btu/h)	Total (Btu/h)	Percent of Total (%)
Roof	0	0	0	0	0.0
Other Roof	0	0	0	0	0.0
Glass	0	0	0	0	0.0
Door	0	-10	0	-10	-0.4
Wall	0	0	0	0	0.0
Below-Grade Wall	0	0	0	0	0.0
Other Wall	0	0	0	0	0.0
Partition	0	-261	0	-261	-9.8
Exterior Floor	0	0	0	0	0.0
Interior Floor	0	-167	0	-167	-6.3
Slab	0	0	0	0	0.0
Other Floor	0	0	0	0	0.0
Infiltration	0	0	0	0	0.0
Envelope Subtotal	0	-437	0	-437	-
People	105	260	200	565	21.3
Lights	145	434	0	579	21.8
RA Sensible (Lights)	167	0	0	167	6.3
Miscellaneous Loads	700	897	0	1597	60.3
Internal Subtotal	1117	1591	200	2907	-
RA (All Other)	0	0	0	0	0.0
DOA Direct to Room	0	0	0	0	0.0
Ceiling	0	182	0	182	6.9
Refrigeration	0	0	0	0	0.0
Service Water	0	0	0	0	0.0
HVAC Equipment Losses	0	0	0	0	0.0
Adj Air Transfer Heat	0	0	0	0	0.0
Sizing Factor Correction	0	0	0	0	0.0
Time Delay Correction	0	-2	0	-2	-0.1
Grand Total	1117	1334	200	2651	100.0

Engineering Checks

Cooling tons	0.22	Input Ventilation cfm	14
Cooling cfm	150.16	Calculated Ventilation cfm	19
ft²/ton	642.30	Number of People	1.00
cfm/ton	679.63	People per 1000 ft²	7
Conditioned ft²	141.9		

Conditions at Time of Heating Peak

Outside	DB / WB / HR	16.4 °F	/	12.6 °F	/	5.3 gr/lb
Room	DB / RH / HR	70.0 °F	/	4.9 %	/	5.2 gr/lb

	Instant Sensible (Btu/h)	Time Delay Sensible (Btu/h)	Latent (Btu/h)	Total (Btu/h)	Percent of Total (%)
Roof	0	0	0	0	0.0
Other Roof	0	0	0	0	0.0
Glass	0	0	0	0	0.0
Door	0	-1	0	-1	0.4
Wall	0	0	0	0	0.0
Below-Grade Wall	0	0	0	0	0.0
Other Wall	0	0	0	0	0.0
Partition	0	25	0	25	-8.9
Exterior Floor	0	0	0	0	0.0
Interior Floor	0	60	0	60	-21.6
Slab	0	0	0	0	0.0
Other Floor	0	0	0	0	0.0
Infiltration	0	0	0	0	0.0
Envelope Subtotal	0	84	0	84	-
People	0	0	0	0	0.0
Lights	0	0	0	0	0.0
RA Sensible (Lights)	0	0	0	0	0.0
Miscellaneous Loads	0	0	0	0	0.0
Internal Subtotal	0	0	0	0	-
RA (All Other)	0	0	0	0	0.0
DOA Direct to Room	0	0	0	0	0.0
Ceiling	0	-363	0	-363	130.1
Refrigeration	0	0	0	0	0.0
Service Water	0	0	0	0	0.0
HVAC Equipment Losses	0	0	0	0	0.0
Adj Air Transfer Heat	0	0	0	0	0.0
Sizing Factor Correction	0	0	0	0	0.0
Time Delay Correction	0	0	0	0	0.0
Grand Total	0	-279	0	-279	100.0

Engineering Checks

Heating Mbh	-0.28	Input Ventilation cfm	14
Heating cfm	45.05	Calculated Ventilation cfm	13
ft²/Mbh	-508.77	Number of People	1.00
cfm/Mbh	-161.53	People per 1000 ft²	7
Conditioned ft²	141.9		

ROOM_02_247_OFFICE_R03

Conditions at Time of Cooling Peak

Outside	DB / WB / HR	88.9 °F	/	73.4 °F	/	99.5 gr/lb
Room	DB / RH / HR	75.0 °F	/	50.6 %	/	65.5 gr/lb

	Instant Sensible (Btu/h)	Time Delay Sensible (Btu/h)	Latent (Btu/h)	Total (Btu/h)	Percent of Total (%)
Roof	0	0	0	0	0.0
Other Roof	0	0	0	0	0.0
Glass	0	0	0	0	0.0
Door	0	-12	0	-12	-0.4
Wall	0	0	0	0	0.0
Below-Grade Wall	0	0	0	0	0.0
Other Wall	0	0	0	0	0.0
Partition	0	-238	0	-238	-8.6
Exterior Floor	0	0	0	0	0.0
Interior Floor	0	-186	0	-186	-6.8
Slab	0	0	0	0	0.0
Other Floor	0	0	0	0	0.0
Infiltration	0	0	0	0	0.0
Envelope Subtotal	0	-435	0	-435	-
People	105	258	200	563	20.5
Lights	150	461	0	611	22.2
RA Sensible (Lights)	173	0	0	173	6.3
Miscellaneous Loads	710	934	0	1644	59.8
Internal Subtotal	1138	1653	200	2991	-
RA (All Other)	0	0	0	0	0.0
DOA Direct to Room	0	0	0	0	0.0
Ceiling	0	196	0	196	7.1
Refrigeration	0	0	0	0	0.0
Service Water	0	0	0	0	0.0
HVAC Equipment Losses	0	0	0	0	0.0
Adj Air Transfer Heat	0	0	0	0	0.0
Sizing Factor Correction	0	0	0	0	0.0
Time Delay Correction	0	-2	0	-2	-0.1
Grand Total	1138	1411	200	2749	100.0

Engineering Checks

Cooling tons	0.23	Input Ventilation cfm	14
Cooling cfm	153.53	Calculated Ventilation cfm	20
ft²/ton	641.34	Number of People	1.00
cfm/ton	669.95	People per 1000 ft²	7
Conditioned ft²	146.9		

Conditions at Time of Heating Peak

Outside	DB / WB / HR	16.4 °F	/	12.6 °F	/	5.3 gr/lb
Room	DB / RH / HR	70.0 °F	/	4.9 %	/	5.2 gr/lb

	Instant Sensible (Btu/h)	Time Delay Sensible (Btu/h)	Latent (Btu/h)	Total (Btu/h)	Percent of Total (%)
Roof	0	0	0	0	0.0
Other Roof	0	0	0	0	0.0
Glass	0	0	0	0	0.0
Door	0	1	0	1	-0.2
Wall	0	0	0	0	0.0
Below-Grade Wall	0	0	0	0	0.0
Other Wall	0	0	0	0	0.0
Partition	0	-22	0	-22	5.8
Exterior Floor	0	0	0	0	0.0
Interior Floor	0	28	0	28	-7.3
Slab	0	0	0	0	0.0
Other Floor	0	0	0	0	0.0
Infiltration	0	0	0	0	0.0
Envelope Subtotal	0	6	0	6	-
People	0	0	0	0	0.0
Lights	0	0	0	0	0.0
RA Sensible (Lights)	0	0	0	0	0.0
Miscellaneous Loads	0	0	0	0	0.0
Internal Subtotal	0	0	0	0	-
RA (All Other)	0	0	0	0	0.0
DOA Direct to Room	0	0	0	0	0.0
Ceiling	0	-387	0	-387	101.7
Refrigeration	0	0	0	0	0.0
Service Water	0	0	0	0	0.0
HVAC Equipment Losses	0	0	0	0	0.0
Adj Air Transfer Heat	0	0	0	0	0.0
Sizing Factor Correction	0	0	0	0	0.0
Time Delay Correction	0	0	0	0	0.0
Grand Total	0	-381	0	-381	100.0

Engineering Checks

Heating Mbh	-0.38	Input Ventilation cfm	14
Heating cfm	46.06	Calculated Ventilation cfm	13
ft²/Mbh	-386.03	Number of People	1.00
cfm/Mbh	-121.00	People per 1000 ft²	7
Conditioned ft²	146.9		

ROOM_02_248_OFFICE_R03

Conditions at Time of Cooling Peak

Outside	DB / WB / HR	88.9 °F	/	73.4 °F	/	99.5 gr/lb
Room	DB / RH / HR	75.0 °F	/	50.5 %	/	65.3 gr/lb

	Instant Sensible (Btu/h)	Time Delay Sensible (Btu/h)	Latent (Btu/h)	Total (Btu/h)	Percent of Total (%)
Roof	0	0	0	0	0.0
Other Roof	0	0	0	0	0.0
Glass	0	0	0	0	0.0
Door	0	-3	0	-3	-0.1
Wall	0	0	0	0	0.0
Below-Grade Wall	0	0	0	0	0.0
Other Wall	0	0	0	0	0.0
Partition	0	-151	0	-151	-5.2
Exterior Floor	0	0	0	0	0.0
Interior Floor	0	-165	0	-165	-5.7
Slab	0	0	0	0	0.0
Other Floor	0	0	0	0	0.0
Infiltration	0	0	0	0	0.0
Envelope Subtotal	0	-319	0	-319	-
People	105	254	200	559	19.2
Lights	155	463	0	618	21.2
RA Sensible (Lights)	178	0	0	178	6.1
Miscellaneous Loads	720	920	0	1640	56.4
Internal Subtotal	1158	1637	200	2996	-
RA (All Other)	0	0	0	0	0.0
DOA Direct to Room	0	0	0	0	0.0
Ceiling	0	235	0	235	8.1
Refrigeration	0	0	0	0	0.0
Service Water	0	0	0	0	0.0
HVAC Equipment Losses	0	0	0	0	0.0
Adj Air Transfer Heat	0	0	0	0	0.0
Sizing Factor Correction	0	0	0	0	0.0
Time Delay Correction	0	-2	0	-2	-0.1
Grand Total	1158	1552	200	2910	100.0

Engineering Checks

Cooling tons	0.24	Input Ventilation cfm	14
Cooling cfm	156.71	Calculated Ventilation cfm	20
ft²/ton	625.89	Number of People	1.00
cfm/ton	646.09	People per 1000 ft²	7
Conditioned ft²	151.8		

Conditions at Time of Heating Peak

Outside	DB / WB / HR	16.4 °F	/	12.6 °F	/	5.3 gr/lb
Room	DB / RH / HR	70.0 °F	/	4.9 %	/	5.2 gr/lb

	Instant Sensible (Btu/h)	Time Delay Sensible (Btu/h)	Latent (Btu/h)	Total (Btu/h)	Percent of Total (%)
Roof	0	0	0	0	0.0
Other Roof	0	0	0	0	0.0
Glass	0	0	0	0	0.0
Door	0	-1	0	-1	0.2
Wall	0	0	0	0	0.0
Below-Grade Wall	0	0	0	0	0.0
Other Wall	0	0	0	0	0.0
Partition	0	-10	0	-10	2.5
Exterior Floor	0	0	0	0	0.0
Interior Floor	0	30	0	30	-7.6
Slab	0	0	0	0	0.0
Other Floor	0	0	0	0	0.0
Infiltration	0	0	0	0	0.0
Envelope Subtotal	0	19	0	19	-
People	0	0	0	0	0.0
Lights	0	0	0	0	0.0
RA Sensible (Lights)	0	0	0	0	0.0
Miscellaneous Loads	0	0	0	0	0.0
Internal Subtotal	0	0	0	0	-
RA (All Other)	0	0	0	0	0.0
DOA Direct to Room	0	0	0	0	0.0
Ceiling	0	-408	0	-408	104.9
Refrigeration	0	0	0	0	0.0
Service Water	0	0	0	0	0.0
HVAC Equipment Losses	0	0	0	0	0.0
Adj Air Transfer Heat	0	0	0	0	0.0
Sizing Factor Correction	0	0	0	0	0.0
Time Delay Correction	0	0	0	0	0.0
Grand Total	0	-389	0	-389	100.0

Engineering Checks

Heating Mbh	-0.39	Input Ventilation cfm	14
Heating cfm	47.01	Calculated Ventilation cfm	13
ft²/Mbh	-390.54	Number of People	1.00
cfm/Mbh	-120.96	People per 1000 ft²	7
Conditioned ft²	151.8		

ROOM_02_250_CORRIDOR_R03

Conditions at Time of Cooling Peak

Outside	DB / WB / HR	89.4 °F	/	73.5 °F	/	99.5 gr/lb
Room	DB / RH / HR	81.0 °F	/	39.9 %	/	62.8 gr/lb

	Instant Sensible (Btu/h)	Time Delay Sensible (Btu/h)	Latent (Btu/h)	Total (Btu/h)	Percent of Total (%)
Roof	0	0	0	0	0.0
Other Roof	0	0	0	0	0.0
Glass	4	232	0	236	28.5
Door	0	-8	0	-8	-0.9
Wall	0	0	0	0	0.0
Below-Grade Wall	0	0	0	0	0.0
Other Wall	0	0	0	0	0.0
Partition	0	-70	0	-70	-8.5
Exterior Floor	0	0	0	0	0.0
Interior Floor	0	-57	0	-57	-6.9
Slab	0	0	0	0	0.0
Other Floor	0	0	0	0	0.0
Infiltration	0	0	0	0	0.0
Envelope Subtotal	4	97	0	101	-
People	0	0	0	0	0.0
Lights	90	231	0	321	38.7
RA Sensible (Lights)	103	0	0	103	12.4
Miscellaneous Loads	0	0	0	0	0.0
Internal Subtotal	193	231	0	424	-
RA (All Other)	0	0	0	0	0.0
DOA Direct to Room	0	0	0	0	0.0
Ceiling	0	313	0	313	37.8
Refrigeration	0	0	0	0	0.0
Service Water	0	0	0	0	0.0
HVAC Equipment Losses	0	0	0	0	0.0
Adj Air Transfer Heat	0	0	0	0	0.0
Sizing Factor Correction	0	0	0	0	0.0
Time Delay Correction	0	-10	0	-10	-1.2
Grand Total	197	631	0	828	100.0

Engineering Checks

Cooling tons	0.07	Input Ventilation cfm	9
Cooling cfm	98.41	Calculated Ventilation cfm	14
ft²/ton	2139.50	Number of People	0.00
cfm/ton	1,426.28	People per 1000 ft²	0
Conditioned ft²	147.6		

Conditions at Time of Heating Peak

Outside	DB / WB / HR	16.4 °F	/	12.6 °F	/	5.3 gr/lb
Room	DB / RH / HR	70.0 °F	/	4.9 %	/	5.2 gr/lb

	Instant Sensible (Btu/h)	Time Delay Sensible (Btu/h)	Latent (Btu/h)	Total (Btu/h)	Percent of Total (%)
Roof	0	0	0	0	0.0
Other Roof	0	0	0	0	0.0
Glass	-106	0	0	-106	21.9
Door	0	58	0	58	-12.0
Wall	0	0	0	0	0.0
Below-Grade Wall	0	0	0	0	0.0
Other Wall	0	0	0	0	0.0
Partition	0	52	0	52	-10.7
Exterior Floor	0	0	0	0	0.0
Interior Floor	0	-40	0	-40	8.3
Slab	0	0	0	0	0.0
Other Floor	0	0	0	0	0.0
Infiltration	0	0	0	0	0.0
Envelope Subtotal	-106	69	0	-36	-
People	0	0	0	0	0.0
Lights	0	0	0	0	0.0
RA Sensible (Lights)	0	0	0	0	0.0
Miscellaneous Loads	0	0	0	0	0.0
Internal Subtotal	0	0	0	0	-
RA (All Other)	0	0	0	0	0.0
DOA Direct to Room	0	0	0	0	0.0
Ceiling	0	-445	0	-445	92.5
Refrigeration	0	0	0	0	0.0
Service Water	0	0	0	0	0.0
HVAC Equipment Losses	0	0	0	0	0.0
Adj Air Transfer Heat	0	0	0	0	0.0
Sizing Factor Correction	0	0	0	0	0.0
Time Delay Correction	0	0	0	0	0.0
Grand Total	-106	-376	0	-481	100.0

Engineering Checks

Heating Mbh	-0.48	Input Ventilation cfm	9
Heating cfm	29.52	Calculated Ventilation cfm	8
ft²/Mbh	-306.58	Number of People	0.00
cfm/Mbh	-61.33	People per 1000 ft²	0
Conditioned ft²	147.6		

ROOM_02_250_ELEC

Conditions at Time of Cooling Peak

Outside	DB / WB / HR	88.3 °F	/	73.2 °F	/	99.5 gr/lb
Room	DB / RH / HR	81.0 °F	/	39.9 %	/	62.8 gr/lb

	Instant Sensible (Btu/h)	Time Delay Sensible (Btu/h)	Latent (Btu/h)	Total (Btu/h)	Percent of Total (%)
Roof	0	0	0	0	0.0
Other Roof	0	0	0	0	0.0
Glass	0	0	0	0	0.0
Door	0	-66	0	-66	-1.8
Wall	0	0	0	0	0.0
Below-Grade Wall	0	0	0	0	0.0
Other Wall	0	0	0	0	0.0
Partition	0	-1315	0	-1315	-36.8
Exterior Floor	0	0	0	0	0.0
Interior Floor	0	-435	0	-435	-12.2
Slab	0	0	0	0	0.0
Other Floor	0	0	0	0	0.0
Infiltration	0	0	0	0	0.0
Envelope Subtotal	0	-1816	0	-1816	-
People	0	0	0	0	0.0
Lights	37	112	0	150	4.2
RA Sensible (Lights)	43	0	0	43	1.2
Miscellaneous Loads	2351	3047	0	5398	151.2
Internal Subtotal	2430	3160	0	5590	-
RA (All Other)	0	0	0	0	0.0
DOA Direct to Room	0	0	0	0	0.0
Ceiling	0	-205	0	-205	-5.7
Refrigeration	0	0	0	0	0.0
Service Water	0	0	0	0	0.0
HVAC Equipment Losses	0	0	0	0	0.0
Adj Air Transfer Heat	0	0	0	0	0.0
Sizing Factor Correction	0	0	0	0	0.0
Time Delay Correction	0	0	0	0	0.0
Grand Total	2430	1139	0	3570	100.0

Engineering Checks

Cooling tons	0.30	Input Ventilation cfm	124
Cooling cfm	124.11	Calculated Ventilation cfm	0
ft²/ton	322.81	Number of People	0.00
cfm/ton	417.16	People per 1000 ft²	0
Conditioned ft²	96.0		

Conditions at Time of Heating Peak

Outside	DB / WB / HR	32.0 °F	/	32.0 °F	/	0.0 gr/lb
Room	DB / RH / HR	32.0 °F	/	0.0 %	/	0.0 gr/lb

	Instant Sensible (Btu/h)	Time Delay Sensible (Btu/h)	Latent (Btu/h)	Total (Btu/h)	Percent of Total (%)
Roof	0	0	0	0	0.0
Other Roof	0	0	0	0	0.0
Glass	0	0	0	0	0.0
Door	0	0	0	0	0.0
Wall	0	0	0	0	0.0
Below-Grade Wall	0	0	0	0	0.0
Other Wall	0	0	0	0	0.0
Partition	0	0	0	0	0.0
Exterior Floor	0	0	0	0	0.0
Interior Floor	0	0	0	0	0.0
Slab	0	0	0	0	0.0
Other Floor	0	0	0	0	0.0
Infiltration	0	0	0	0	0.0
Envelope Subtotal	0	0	0	0	-
People	0	0	0	0	0.0
Lights	0	0	0	0	0.0
RA Sensible (Lights)	0	0	0	0	0.0
Miscellaneous Loads	0	0	0	0	0.0
Internal Subtotal	0	0	0	0	-
RA (All Other)	0	0	0	0	0.0
DOA Direct to Room	0	0	0	0	0.0
Ceiling	0	0	0	0	0.0
Refrigeration	0	0	0	0	0.0
Service Water	0	0	0	0	0.0
HVAC Equipment Losses	0	0	0	0	0.0
Adj Air Transfer Heat	0	0	0	0	0.0
Sizing Factor Correction	0	0	0	0	0.0
Time Delay Correction	0	0	0	0	0.0
Grand Total	0	0	0	0	100.0

Engineering Checks

Heating Mbh	0.00	Input Ventilation cfm	124
Heating cfm	124.11	Calculated Ventilation cfm	0
ft²/Mbh	0.00	Number of People	0.00
cfm/Mbh	0.00	People per 1000 ft²	0
Conditioned ft²	96.0		

ROOM_02_251_TELECOM

Conditions at Time of Cooling Peak

Outside	DB / WB / HR	87.8 °F	/	73.1 °F	/	99.5 gr/lb
Room	DB / RH / HR	81.0 °F	/	39.9 %	/	62.8 gr/lb

	Instant Sensible (Btu/h)	Time Delay Sensible (Btu/h)	Latent (Btu/h)	Total (Btu/h)	Percent of Total (%)
Roof	0	0	0	0	0.0
Other Roof	0	0	0	0	0.0
Glass	0	0	0	0	0.0
Door	0	-1	0	-1	-0.3
Wall	0	0	0	0	0.0
Below-Grade Wall	0	0	0	0	0.0
Other Wall	0	0	0	0	0.0
Partition	0	-61	0	-61	-10.8
Exterior Floor	0	0	0	0	0.0
Interior Floor	0	-40	0	-40	-7.0
Slab	0	0	0	0	0.0
Other Floor	0	0	0	0	0.0
Infiltration	0	0	0	0	0.0
Envelope Subtotal	0	-102	0	-102	-
People	0	0	0	0	0.0
Lights	41	99	0	140	24.8
RA Sensible (Lights)	47	0	0	47	8.3
Miscellaneous Loads	137	142	0	278	49.2
Internal Subtotal	225	241	0	466	-
RA (All Other)	0	0	0	0	0.0
DOA Direct to Room	0	0	0	0	0.0
Ceiling	0	202	0	202	35.7
Refrigeration	0	0	0	0	0.0
Service Water	0	0	0	0	0.0
HVAC Equipment Losses	0	0	0	0	0.0
Adj Air Transfer Heat	0	0	0	0	0.0
Sizing Factor Correction	0	0	0	0	0.0
Time Delay Correction	0	0	0	0	0.0
Grand Total	225	340	0	565	100.0

Engineering Checks

Cooling tons	0.05	Input Ventilation cfm	18
Cooling cfm	18.24	Calculated Ventilation cfm	0
ft²/ton	2251.08	Number of People	0.00
cfm/ton	387.05	People per 1000 ft²	0
Conditioned ft²	106.0		

Conditions at Time of Heating Peak

Outside	DB / WB / HR	16.4 °F	/	12.6 °F	/	5.3 gr/lb
Room	DB / RH / HR	70.0 °F	/	4.9 %	/	5.2 gr/lb

	Instant Sensible (Btu/h)	Time Delay Sensible (Btu/h)	Latent (Btu/h)	Total (Btu/h)	Percent of Total (%)
Roof	0	0	0	0	0.0
Other Roof	0	0	0	0	0.0
Glass	0	0	0	0	0.0
Door	0	-8	0	-8	69.7
Wall	0	0	0	0	0.0
Below-Grade Wall	0	0	0	0	0.0
Other Wall	0	0	0	0	0.0
Partition	0	224	0	224	-1915.6
Exterior Floor	0	0	0	0	0.0
Interior Floor	0	60	0	60	-511.8
Slab	0	0	0	0	0.0
Other Floor	0	0	0	0	0.0
Infiltration	0	0	0	0	0.0
Envelope Subtotal	0	276	0	276	-
People	0	0	0	0	0.0
Lights	0	0	0	0	0.0
RA Sensible (Lights)	0	0	0	0	0.0
Miscellaneous Loads	0	0	0	0	0.0
Internal Subtotal	0	0	0	0	-
RA (All Other)	0	0	0	0	0.0
DOA Direct to Room	0	0	0	0	0.0
Ceiling	0	-287	0	-287	2457.7
Refrigeration	0	0	0	0	0.0
Service Water	0	0	0	0	0.0
HVAC Equipment Losses	0	0	0	0	0.0
Adj Air Transfer Heat	0	0	0	0	0.0
Sizing Factor Correction	0	0	0	0	0.0
Time Delay Correction	0	0	0	0	0.0
Grand Total	0	-12	0	-12	100.0

Engineering Checks

Heating Mbh	-0.01	Input Ventilation cfm	18
Heating cfm	18.24	Calculated Ventilation cfm	0
ft²/Mbh	-9073.87	Number of People	0.00
cfm/Mbh	-1,560.46	People per 1000 ft²	0
Conditioned ft²	106.0		

ROOM_02_252_BREAKOUT_R03

Conditions at Time of Cooling Peak

Outside	DB / WB / HR	79.2 °F	/	70.6 °F	/	99.4 gr/lb
Room	DB / RH / HR	75.0 °F	/	50.5 %	/	65.3 gr/lb

	Instant Sensible (Btu/h)	Time Delay Sensible (Btu/h)	Latent (Btu/h)	Total (Btu/h)	Percent of Total (%)
Roof	0	0	0	0	0.0
Other Roof	0	0	0	0	0.0
Glass	516	3057	0	3573	96.1
Door	0	0	0	0	0.0
Wall	0	59	0	59	1.6
Below-Grade Wall	0	0	0	0	0.0
Other Wall	0	0	0	0	0.0
Partition	0	-631	0	-631	-17.0
Exterior Floor	0	0	0	0	0.0
Interior Floor	0	-962	0	-962	-25.9
Slab	0	0	0	0	0.0
Other Floor	0	0	0	0	0.0
Infiltration	0	0	0	0	0.0
Envelope Subtotal	516	1522	0	2039	-
People	142	246	271	659	17.7
Lights	64	167	0	231	6.2
RA Sensible (Lights)	73	0	0	73	2.0
Miscellaneous Loads	554	690	0	1245	33.5
Internal Subtotal	834	1104	271	2208	-
RA (All Other)	0	0	0	0	0.0
DOA Direct to Room	0	0	0	0	0.0
Ceiling	0	-318	0	-318	-8.5
Refrigeration	0	0	0	0	0.0
Service Water	0	0	0	0	0.0
HVAC Equipment Losses	0	0	0	0	0.0
Adj Air Transfer Heat	0	0	0	0	0.0
Sizing Factor Correction	0	0	0	0	0.0
Time Delay Correction	0	-212	0	-212	-5.7
Grand Total	1350	2096	271	3717	100.0

Engineering Checks

Cooling tons	0.31	Input Ventilation cfm	11
Cooling cfm	154.35	Calculated Ventilation cfm	20
ft²/ton	228.71	Number of People	1.35
cfm/ton	498.27	People per 1000 ft²	19
Conditioned ft²	70.8		

Conditions at Time of Heating Peak

Outside	DB / WB / HR	16.4 °F	/	12.6 °F	/	5.3 gr/lb
Room	DB / RH / HR	70.0 °F	/	4.9 %	/	5.2 gr/lb

	Instant Sensible (Btu/h)	Time Delay Sensible (Btu/h)	Latent (Btu/h)	Total (Btu/h)	Percent of Total (%)
Roof	0	0	0	0	0.0
Other Roof	0	0	0	0	0.0
Glass	-668	0	0	-668	68.3
Door	0	0	0	0	0.0
Wall	0	-127	0	-127	13.0
Below-Grade Wall	0	0	0	0	0.0
Other Wall	0	0	0	0	0.0
Partition	0	79	0	79	-8.1
Exterior Floor	0	0	0	0	0.0
Interior Floor	0	-29	0	-29	3.0
Slab	0	0	0	0	0.0
Other Floor	0	0	0	0	0.0
Infiltration	0	0	0	0	0.0
Envelope Subtotal	-668	-77	0	-745	-
People	0	0	0	0	0.0
Lights	0	0	0	0	0.0
RA Sensible (Lights)	0	0	0	0	0.0
Miscellaneous Loads	0	0	0	0	0.0
Internal Subtotal	0	0	0	0	-
RA (All Other)	0	0	0	0	0.0
DOA Direct to Room	0	0	0	0	0.0
Ceiling	0	-233	0	-233	23.8
Refrigeration	0	0	0	0	0.0
Service Water	0	0	0	0	0.0
HVAC Equipment Losses	0	0	0	0	0.0
Adj Air Transfer Heat	0	0	0	0	0.0
Sizing Factor Correction	0	0	0	0	0.0
Time Delay Correction	0	0	0	0	0.0
Grand Total	-668	-310	0	-978	100.0

Engineering Checks

Heating Mbh	-0.98	Input Ventilation cfm	11
Heating cfm	46.30	Calculated Ventilation cfm	13
ft²/Mbh	-72.42	Number of People	1.35
cfm/Mbh	-47.34	People per 1000 ft²	19
Conditioned ft²	70.8		

ROOM_02_STAIR 1

Conditions at Time of Cooling Peak

Outside	DB / WB / HR	88.3 °F	/	73.2 °F	/	99.5 gr/lb
Room	DB / RH / HR	81.0 °F	/	39.9 %	/	62.8 gr/lb

	Instant Sensible (Btu/h)	Time Delay Sensible (Btu/h)	Latent (Btu/h)	Total (Btu/h)	Percent of Total (%)
Roof	0	692	0	692	3.0
Other Roof	0	0	0	0	0.0
Glass	5946	22574	0	28520	124.9
Door	0	-150	0	-150	-0.7
Wall	0	0	0	0	0.0
Below-Grade Wall	0	0	0	0	0.0
Other Wall	0	0	0	0	0.0
Partition	0	-5389	0	-5389	-23.6
Exterior Floor	0	0	0	0	0.0
Interior Floor	0	-1406	0	-1406	-6.2
Slab	0	0	0	0	0.0
Other Floor	0	0	0	0	0.0
Infiltration	0	0	0	0	0.0
Envelope Subtotal	5946	16322	0	22268	-
People	0	0	0	0	0.0
Lights	138	293	0	431	1.9
RA Sensible (Lights)	158	0	0	158	0.7
Miscellaneous Loads	0	0	0	0	0.0
Internal Subtotal	297	293	0	589	-
RA (All Other)	0	0	0	0	0.0
DOA Direct to Room	0	0	0	0	0.0
Ceiling	0	0	0	0	0.0
Refrigeration	0	0	0	0	0.0
Service Water	0	0	0	0	0.0
HVAC Equipment Losses	0	0	0	0	0.0
Adj Air Transfer Heat	0	0	0	0	0.0
Sizing Factor Correction	0	0	0	0	0.0
Time Delay Correction	0	-18	0	-18	-0.1
Grand Total	6243	16597	0	22840	100.0

Engineering Checks

Cooling tons	1.90	Input Ventilation cfm	798
Cooling cfm	798.17	Calculated Ventilation cfm	0
ft²/ton	114.08	Number of People	0.00
cfm/ton	419.28	People per 1000 ft²	0
Conditioned ft²	217.1		

Conditions at Time of Heating Peak

Outside	DB / WB / HR	16.4 °F	/	12.6 °F	/	5.3 gr/lb
Room	DB / RH / HR	70.0 °F	/	4.9 %	/	5.2 gr/lb

	Instant Sensible (Btu/h)	Time Delay Sensible (Btu/h)	Latent (Btu/h)	Total (Btu/h)	Percent of Total (%)
Roof	0	-537	0	-537	6.9
Other Roof	0	0	0	0	0.0
Glass	-7926	0	0	-7926	102.3
Door	0	41	0	41	-0.5
Wall	0	-1	0	-1	0.0
Below-Grade Wall	0	0	0	0	0.0
Other Wall	0	0	0	0	0.0
Partition	0	545	0	545	-7.0
Exterior Floor	0	0	0	0	0.0
Interior Floor	0	132	0	132	-1.7
Slab	0	0	0	0	0.0
Other Floor	0	0	0	0	0.0
Infiltration	0	0	0	0	0.0
Envelope Subtotal	-7926	180	0	-7746	-
People	0	0	0	0	0.0
Lights	0	0	0	0	0.0
RA Sensible (Lights)	0	0	0	0	0.0
Miscellaneous Loads	0	0	0	0	0.0
Internal Subtotal	0	0	0	0	-
RA (All Other)	0	0	0	0	0.0
DOA Direct to Room	0	0	0	0	0.0
Ceiling	0	0	0	0	0.0
Refrigeration	0	0	0	0	0.0
Service Water	0	0	0	0	0.0
HVAC Equipment Losses	0	0	0	0	0.0
Adj Air Transfer Heat	0	0	0	0	0.0
Sizing Factor Correction	0	0	0	0	0.0
Time Delay Correction	0	0	0	0	0.0
Grand Total	-7926	180	0	-7746	100.0

Engineering Checks

Heating Mbh	-7.75	Input Ventilation cfm	798
Heating cfm	798.17	Calculated Ventilation cfm	0
ft²/Mbh	-28.03	Number of People	0.00
cfm/Mbh	-103.04	People per 1000 ft²	0
Conditioned ft²	217.1		

ROOM_02_STAIR 2

Conditions at Time of Cooling Peak

Outside	DB / WB / HR	86.6 °F	/	72.7 °F	/	99.5 gr/lb
Room	DB / RH / HR	81.0 °F	/	39.9 %	/	62.8 gr/lb

	Instant Sensible (Btu/h)	Time Delay Sensible (Btu/h)	Latent (Btu/h)	Total (Btu/h)	Percent of Total (%)
Roof	0	0	0	0	0.0
Other Roof	0	0	0	0	0.0
Glass	0	0	0	0	0.0
Door	0	-11	0	-11	-0.6
Wall	0	561	0	561	30.4
Below-Grade Wall	0	0	0	0	0.0
Other Wall	0	0	0	0	0.0
Partition	0	-91	0	-91	-4.9
Exterior Floor	0	0	0	0	0.0
Interior Floor	0	331	0	331	17.9
Slab	0	0	0	0	0.0
Other Floor	0	0	0	0	0.0
Infiltration	0	0	0	0	0.0
Envelope Subtotal	0	789	0	789	-
People	0	0	0	0	0.0
Lights	154	349	0	503	27.3
RA Sensible (Lights)	176	0	0	176	9.6
Miscellaneous Loads	0	0	0	0	0.0
Internal Subtotal	330	349	0	679	-
RA (All Other)	0	0	0	0	0.0
DOA Direct to Room	0	0	0	0	0.0
Ceiling	0	375	0	375	20.4
Refrigeration	0	0	0	0	0.0
Service Water	0	0	0	0	0.0
HVAC Equipment Losses	0	0	0	0	0.0
Adj Air Transfer Heat	0	0	0	0	0.0
Sizing Factor Correction	0	0	0	0	0.0
Time Delay Correction	0	0	0	0	0.0
Grand Total	330	1514	0	1844	100.0

Engineering Checks

Cooling tons	0.15	Input Ventilation cfm	62
Cooling cfm	61.92	Calculated Ventilation cfm	0
ft²/ton	1572.43	Number of People	0.00
cfm/ton	402.97	People per 1000 ft²	0
Conditioned ft²	241.5		

Conditions at Time of Heating Peak

Outside	DB / WB / HR	16.4 °F	/	12.6 °F	/	5.3 gr/lb
Room	DB / RH / HR	70.0 °F	/	4.9 %	/	5.2 gr/lb

	Instant Sensible (Btu/h)	Time Delay Sensible (Btu/h)	Latent (Btu/h)	Total (Btu/h)	Percent of Total (%)
Roof	0	0	0	0	0.0
Other Roof	0	0	0	0	0.0
Glass	0	0	0	0	0.0
Door	0	11	0	11	-0.7
Wall	0	-719	0	-719	43.2
Below-Grade Wall	0	0	0	0	0.0
Other Wall	0	0	0	0	0.0
Partition	0	69	0	69	-4.1
Exterior Floor	0	0	0	0	0.0
Interior Floor	0	-217	0	-217	13.0
Slab	0	0	0	0	0.0
Other Floor	0	0	0	0	0.0
Infiltration	0	0	0	0	0.0
Envelope Subtotal	0	-856	0	-856	-
People	0	0	0	0	0.0
Lights	0	0	0	0	0.0
RA Sensible (Lights)	0	0	0	0	0.0
Miscellaneous Loads	0	0	0	0	0.0
Internal Subtotal	0	0	0	0	-
RA (All Other)	0	0	0	0	0.0
DOA Direct to Room	0	0	0	0	0.0
Ceiling	0	-810	0	-810	48.6
Refrigeration	0	0	0	0	0.0
Service Water	0	0	0	0	0.0
HVAC Equipment Losses	0	0	0	0	0.0
Adj Air Transfer Heat	0	0	0	0	0.0
Sizing Factor Correction	0	0	0	0	0.0
Time Delay Correction	0	0	0	0	0.0
Grand Total	0	-1666	0	-1666	100.0

Engineering Checks

Heating Mbh	-1.67	Input Ventilation cfm	62
Heating cfm	61.92	Calculated Ventilation cfm	0
ft²/Mbh	-144.96	Number of People	0.00
cfm/Mbh	-37.16	People per 1000 ft²	0
Conditioned ft²	241.5		

ROOM_Room 00-77

Conditions at Time of Cooling Peak

Outside	DB / WB / HR	82.1 °F	/	70.6 °F	/	95.0 gr/lb
Room	DB / RH / HR	75.0 °F	/	50.5 %	/	65.3 gr/lb

	Instant Sensible (Btu/h)	Time Delay Sensible (Btu/h)	Latent (Btu/h)	Total (Btu/h)	Percent of Total (%)
Roof	0	0	0	0	0.0
Other Roof	0	0	0	0	0.0
Glass	1116	375	0	1491	52.9
Door	0	0	0	0	0.0
Wall	0	0	0	0	0.0
Below-Grade Wall	0	0	0	0	0.0
Other Wall	0	0	0	0	0.0
Partition	0	-64	0	-64	-2.3
Exterior Floor	0	0	0	0	0.0
Interior Floor	0	0	0	0	0.0
Slab	0	-93	0	-93	-3.3
Other Floor	0	0	0	0	0.0
Infiltration	0	0	0	0	0.0
Envelope Subtotal	1116	218	0	1334	-
People	100	146	190	437	15.5
Lights	172	238	0	410	14.6
RA Sensible (Lights)	197	0	0	197	7.0
Miscellaneous Loads	390	292	0	682	24.2
Internal Subtotal	859	677	190	1726	-
RA (All Other)	0	0	0	0	0.0
DOA Direct to Room	0	0	0	0	0.0
Ceiling	0	-1	0	-1	0.0
Refrigeration	0	0	0	0	0.0
Service Water	0	0	0	0	0.0
HVAC Equipment Losses	0	0	0	0	0.0
Adj Air Transfer Heat	0	0	0	0	0.0
Sizing Factor Correction	0	0	0	0	0.0
Time Delay Correction	0	-244	0	-244	-8.7
Grand Total	1975	651	190	2816	100.0

Engineering Checks

Cooling tons	0.23	Input Ventilation cfm	16
Cooling cfm	179.87	Calculated Ventilation cfm	38
ft²/ton	811.37	Number of People	0.95
cfm/ton	766.23	People per 1000 ft²	5
Conditioned ft²	190.4		

Conditions at Time of Heating Peak

Outside	DB / WB / HR	16.4 °F	/	12.6 °F	/	5.3 gr/lb
Room	DB / RH / HR	70.0 °F	/	4.9 %	/	5.2 gr/lb

	Instant Sensible (Btu/h)	Time Delay Sensible (Btu/h)	Latent (Btu/h)	Total (Btu/h)	Percent of Total (%)
Roof	0	0	0	0	0.0
Other Roof	0	0	0	0	0.0
Glass	-337	0	0	-337	93.0
Door	0	0	0	0	0.0
Wall	0	0	0	0	0.0
Below-Grade Wall	0	0	0	0	0.0
Other Wall	0	0	0	0	0.0
Partition	0	73	0	73	-20.2
Exterior Floor	0	0	0	0	0.0
Interior Floor	0	0	0	0	0.0
Slab	0	-1	0	-1	0.2
Other Floor	0	0	0	0	0.0
Infiltration	0	0	0	0	0.0
Envelope Subtotal	-337	72	0	-265	-
People	0	0	0	0	0.0
Lights	0	0	0	0	0.0
RA Sensible (Lights)	0	0	0	0	0.0
Miscellaneous Loads	0	0	0	0	0.0
Internal Subtotal	0	0	0	0	-
RA (All Other)	0	0	0	0	0.0
DOA Direct to Room	0	0	0	0	0.0
Ceiling	0	-98	0	-98	27.0
Refrigeration	0	0	0	0	0.0
Service Water	0	0	0	0	0.0
HVAC Equipment Losses	0	0	0	0	0.0
Adj Air Transfer Heat	0	0	0	0	0.0
Sizing Factor Correction	0	0	0	0	0.0
Time Delay Correction	0	0	0	0	0.0
Grand Total	-337	-25	0	-362	100.0

Engineering Checks

Heating Mbh	-0.36	Input Ventilation cfm	16
Heating cfm	53.96	Calculated Ventilation cfm	15
ft²/Mbh	-525.39	Number of People	0.95
cfm/Mbh	-148.88	People per 1000 ft²	5
Conditioned ft²	190.4		

ROOM_Room 00-78

Conditions at Time of Cooling Peak

Outside	DB / WB / HR	83.2 °F	/	71.0 °F	/	95.0 gr/lb
Room	DB / RH / HR	75.0 °F	/	50.4 %	/	65.1 gr/lb

	Instant Sensible (Btu/h)	Time Delay Sensible (Btu/h)	Latent (Btu/h)	Total (Btu/h)	Percent of Total (%)
Roof	0	0	0	0	0.0
Other Roof	0	0	0	0	0.0
Glass	2815	1455	0	4270	61.9
Door	0	0	0	0	0.0
Wall	0	68	0	68	1.0
Below-Grade Wall	0	0	0	0	0.0
Other Wall	0	0	0	0	0.0
Partition	0	0	0	0	0.0
Exterior Floor	0	0	0	0	0.0
Interior Floor	0	0	0	0	0.0
Slab	0	-585	0	-585	-8.5
Other Floor	0	0	0	0	0.0
Infiltration	0	0	0	0	0.0
Envelope Subtotal	2815	937	0	3752	-
People	228	264	434	926	13.4
Lights	392	442	0	833	12.1
RA Sensible (Lights)	450	0	0	450	6.5
Miscellaneous Loads	888	534	0	1422	20.6
Internal Subtotal	1958	1239	434	3631	-
RA (All Other)	0	0	0	0	0.0
DOA Direct to Room	0	0	0	0	0.0
Ceiling	0	-48	0	-48	-0.7
Refrigeration	0	0	0	0	0.0
Service Water	0	0	0	0	0.0
HVAC Equipment Losses	0	0	0	0	0.0
Adj Air Transfer Heat	0	0	0	0	0.0
Sizing Factor Correction	0	0	0	0	0.0
Time Delay Correction	0	-441	0	-441	-6.4
Grand Total	4773	1687	434	6894	100.0

Engineering Checks

Cooling tons	0.57	Input Ventilation cfm	37
Cooling cfm	433.07	Calculated Ventilation cfm	92
ft²/ton	755.35	Number of People	2.17
cfm/ton	753.69	People per 1000 ft²	5
Conditioned ft²	433.9		

Conditions at Time of Heating Peak

Outside	DB / WB / HR	16.4 °F	/	12.6 °F	/	5.3 gr/lb
Room	DB / RH / HR	70.0 °F	/	4.9 %	/	5.2 gr/lb

	Instant Sensible (Btu/h)	Time Delay Sensible (Btu/h)	Latent (Btu/h)	Total (Btu/h)	Percent of Total (%)
Roof	0	0	0	0	0.0
Other Roof	0	0	0	0	0.0
Glass	-3084	0	0	-3084	88.2
Door	0	0	0	0	0.0
Wall	0	-200	0	-200	5.7
Below-Grade Wall	0	0	0	0	0.0
Other Wall	0	0	0	0	0.0
Partition	0	1	0	1	0.0
Exterior Floor	0	0	0	0	0.0
Interior Floor	0	0	0	0	0.0
Slab	0	-4	0	-4	0.1
Other Floor	0	0	0	0	0.0
Infiltration	0	0	0	0	0.0
Envelope Subtotal	-3084	-203	0	-3287	-
People	0	0	0	0	0.0
Lights	0	0	0	0	0.0
RA Sensible (Lights)	0	0	0	0	0.0
Miscellaneous Loads	0	0	0	0	0.0
Internal Subtotal	0	0	0	0	-
RA (All Other)	0	0	0	0	0.0
DOA Direct to Room	0	0	0	0	0.0
Ceiling	0	-209	0	-209	6.0
Refrigeration	0	0	0	0	0.0
Service Water	0	0	0	0	0.0
HVAC Equipment Losses	0	0	0	0	0.0
Adj Air Transfer Heat	0	0	0	0	0.0
Sizing Factor Correction	0	0	0	0	0.0
Time Delay Correction	0	0	0	0	0.0
Grand Total	-3084	-412	0	-3497	100.0

Engineering Checks

Heating Mbh	-3.50	Input Ventilation cfm	37
Heating cfm	129.92	Calculated Ventilation cfm	37
ft²/Mbh	-124.10	Number of People	2.17
cfm/Mbh	-37.16	People per 1000 ft²	5
Conditioned ft²	433.9		

ROOM_Room 00-79

Conditions at Time of Cooling Peak

Outside	DB / WB / HR	82.8 °F	/	71.6 °F	/	99.4 gr/lb
Room	DB / RH / HR	75.0 °F	/	49.7 %	/	64.3 gr/lb

	Instant Sensible (Btu/h)	Time Delay Sensible (Btu/h)	Latent (Btu/h)	Total (Btu/h)	Percent of Total (%)
Roof	0	0	0	0	0.0
Other Roof	0	0	0	0	0.0
Glass	808	680	0	1487	96.3
Door	0	0	0	0	0.0
Wall	0	0	0	0	0.0
Below-Grade Wall	0	0	0	0	0.0
Other Wall	0	0	0	0	0.0
Partition	0	-176	0	-176	-11.4
Exterior Floor	0	0	0	0	0.0
Interior Floor	0	0	0	0	0.0
Slab	0	-123	0	-123	-7.9
Other Floor	0	0	0	0	0.0
Infiltration	0	0	0	0	0.0
Envelope Subtotal	808	381	0	1188	-
People	34	52	64	150	9.7
Lights	58	91	0	148	9.6
RA Sensible (Lights)	66	0	0	66	4.3
Miscellaneous Loads	131	123	0	254	16.5
Internal Subtotal	289	266	64	619	-
RA (All Other)	0	0	0	0	0.0
DOA Direct to Room	0	0	0	0	0.0
Ceiling	0	-126	0	-126	-8.1
Refrigeration	0	0	0	0	0.0
Service Water	0	0	0	0	0.0
HVAC Equipment Losses	0	0	0	0	0.0
Adj Air Transfer Heat	0	0	0	0	0.0
Sizing Factor Correction	0	0	0	0	0.0
Time Delay Correction	0	-138	0	-138	-8.9
Grand Total	1097	384	64	1544	100.0

Engineering Checks

Cooling tons	0.13	Input Ventilation cfm	5
Cooling cfm	64.69	Calculated Ventilation cfm	14
ft²/ton	497.77	Number of People	0.32
cfm/ton	502.59	People per 1000 ft²	5
Conditioned ft²	64.0		

Conditions at Time of Heating Peak

Outside	DB / WB / HR	16.4 °F	/	12.6 °F	/	5.3 gr/lb
Room	DB / RH / HR	70.0 °F	/	4.9 %	/	5.2 gr/lb

	Instant Sensible (Btu/h)	Time Delay Sensible (Btu/h)	Latent (Btu/h)	Total (Btu/h)	Percent of Total (%)
Roof	0	0	0	0	0.0
Other Roof	0	0	0	0	0.0
Glass	-376	0	0	-376	93.5
Door	0	0	0	0	0.0
Wall	0	0	0	0	0.0
Below-Grade Wall	0	0	0	0	0.0
Other Wall	0	0	0	0	0.0
Partition	0	41	0	41	-10.3
Exterior Floor	0	0	0	0	0.0
Interior Floor	0	0	0	0	0.0
Slab	0	-1	0	-1	0.2
Other Floor	0	0	0	0	0.0
Infiltration	0	0	0	0	0.0
Envelope Subtotal	-376	41	0	-335	-
People	0	0	0	0	0.0
Lights	0	0	0	0	0.0
RA Sensible (Lights)	0	0	0	0	0.0
Miscellaneous Loads	0	0	0	0	0.0
Internal Subtotal	0	0	0	0	-
RA (All Other)	0	0	0	0	0.0
DOA Direct to Room	0	0	0	0	0.0
Ceiling	0	-67	0	-67	16.7
Refrigeration	0	0	0	0	0.0
Service Water	0	0	0	0	0.0
HVAC Equipment Losses	0	0	0	0	0.0
Adj Air Transfer Heat	0	0	0	0	0.0
Sizing Factor Correction	0	0	0	0	0.0
Time Delay Correction	0	0	0	0	0.0
Grand Total	-376	-26	0	-402	100.0

Engineering Checks

Heating Mbh	-0.40	Input Ventilation cfm	5
Heating cfm	19.40	Calculated Ventilation cfm	5
ft²/Mbh	-159.21	Number of People	0.32
cfm/Mbh	-48.23	People per 1000 ft²	5
Conditioned ft²	64.0		

ROOM_Room 00-80

Conditions at Time of Cooling Peak

Outside	DB / WB / HR	90.7 °F	/	73.9 °F	/	99.5 gr/lb
Room	DB / RH / HR	75.0 °F	/	50.6 %	/	65.5 gr/lb

	Instant Sensible (Btu/h)	Time Delay Sensible (Btu/h)	Latent (Btu/h)	Total (Btu/h)	Percent of Total (%)
Roof	0	0	0	0	0.0
Other Roof	0	0	0	0	0.0
Glass	2034	1168	0	3202	48.4
Door	0	0	0	0	0.0
Wall	0	101	0	101	1.5
Below-Grade Wall	0	0	0	0	0.0
Other Wall	0	0	0	0	0.0
Partition	0	-4	0	-4	-0.1
Exterior Floor	0	0	0	0	0.0
Interior Floor	0	0	0	0	0.0
Slab	0	-461	0	-461	-7.0
Other Floor	0	0	0	0	0.0
Infiltration	0	0	0	0	0.0
Envelope Subtotal	2034	803	0	2837	-
People	248	271	473	992	15.0
Lights	427	545	0	972	14.7
RA Sensible (Lights)	490	0	0	490	7.4
Miscellaneous Loads	968	607	0	1576	23.8
Internal Subtotal	2134	1423	473	4030	-
RA (All Other)	0	0	0	0	0.0
DOA Direct to Room	0	0	0	0	0.0
Ceiling	0	105	0	105	1.6
Refrigeration	0	0	0	0	0.0
Service Water	0	0	0	0	0.0
HVAC Equipment Losses	0	0	0	0	0.0
Adj Air Transfer Heat	0	0	0	0	0.0
Sizing Factor Correction	0	0	0	0	0.0
Time Delay Correction	0	-350	0	-350	-5.3
Grand Total	4168	1981	473	6622	100.0

Engineering Checks

Cooling tons	0.55	Input Ventilation cfm	40
Cooling cfm	452.74	Calculated Ventilation cfm	96
ft²/ton	857.34	Number of People	2.37
cfm/ton	820.25	People per 1000 ft²	5
Conditioned ft²	473.1		

Conditions at Time of Heating Peak

Outside	DB / WB / HR	16.4 °F	/	12.6 °F	/	5.3 gr/lb
Room	DB / RH / HR	70.0 °F	/	4.9 %	/	5.2 gr/lb

	Instant Sensible (Btu/h)	Time Delay Sensible (Btu/h)	Latent (Btu/h)	Total (Btu/h)	Percent of Total (%)
Roof	0	0	0	0	0.0
Other Roof	0	0	0	0	0.0
Glass	-3076	0	0	-3076	84.1
Door	0	0	0	0	0.0
Wall	0	-282	0	-282	7.7
Below-Grade Wall	0	0	0	0	0.0
Other Wall	0	0	0	0	0.0
Partition	0	22	0	22	-0.6
Exterior Floor	0	0	0	0	0.0
Interior Floor	0	0	0	0	0.0
Slab	0	-4	0	-4	0.1
Other Floor	0	0	0	0	0.0
Infiltration	0	0	0	0	0.0
Envelope Subtotal	-3076	-264	0	-3340	-
People	0	0	0	0	0.0
Lights	0	0	0	0	0.0
RA Sensible (Lights)	0	0	0	0	0.0
Miscellaneous Loads	0	0	0	0	0.0
Internal Subtotal	0	0	0	0	-
RA (All Other)	0	0	0	0	0.0
DOA Direct to Room	0	0	0	0	0.0
Ceiling	0	-316	0	-316	8.6
Refrigeration	0	0	0	0	0.0
Service Water	0	0	0	0	0.0
HVAC Equipment Losses	0	0	0	0	0.0
Adj Air Transfer Heat	0	0	0	0	0.0
Sizing Factor Correction	0	0	0	0	0.0
Time Delay Correction	0	0	0	0	0.0
Grand Total	-3076	-580	0	-3656	100.0

Engineering Checks

Heating Mbh	-3.66	Input Ventilation cfm	40
Heating cfm	135.82	Calculated Ventilation cfm	38
ft²/Mbh	-129.43	Number of People	2.37
cfm/Mbh	-37.16	People per 1000 ft²	5
Conditioned ft²	473.1		

ROOM_Room 00-81

Conditions at Time of Cooling Peak

Outside	DB / WB / HR	90.3 °F	/	73.7 °F	/	99.5 gr/lb
Room	DB / RH / HR	75.0 °F	/	50.4 %	/	65.1 gr/lb

	Instant Sensible (Btu/h)	Time Delay Sensible (Btu/h)	Latent (Btu/h)	Total (Btu/h)	Percent of Total (%)
Roof	0	0	0	0	0.0
Other Roof	0	0	0	0	0.0
Glass	880	346	0	1226	62.4
Door	0	0	0	0	0.0
Wall	0	0	0	0	0.0
Below-Grade Wall	0	0	0	0	0.0
Other Wall	0	0	0	0	0.0
Partition	0	-133	0	-133	-6.8
Exterior Floor	0	0	0	0	0.0
Interior Floor	0	0	0	0	0.0
Slab	0	-105	0	-105	-5.3
Other Floor	0	0	0	0	0.0
Infiltration	0	0	0	0	0.0
Envelope Subtotal	880	108	0	988	-
People	66	102	126	294	15.0
Lights	114	178	0	291	14.8
RA Sensible (Lights)	130	0	0	130	6.6
Miscellaneous Loads	257	219	0	477	24.3
Internal Subtotal	567	499	126	1192	-
RA (All Other)	0	0	0	0	0.0
DOA Direct to Room	0	0	0	0	0.0
Ceiling	0	-27	0	-27	-1.4
Refrigeration	0	0	0	0	0.0
Service Water	0	0	0	0	0.0
HVAC Equipment Losses	0	0	0	0	0.0
Adj Air Transfer Heat	0	0	0	0	0.0
Sizing Factor Correction	0	0	0	0	0.0
Time Delay Correction	0	-189	0	-189	-9.6
Grand Total	1447	392	126	1965	100.0

Engineering Checks

Cooling tons	0.16	Input Ventilation cfm	11
Cooling cfm	118.77	Calculated Ventilation cfm	25
ft²/ton	768.01	Number of People	0.63
cfm/ton	725.32	People per 1000 ft²	5
Conditioned ft²	125.7		

Conditions at Time of Heating Peak

Outside	DB / WB / HR	16.4 °F	/	12.6 °F	/	5.3 gr/lb
Room	DB / RH / HR	70.0 °F	/	4.9 %	/	5.2 gr/lb

	Instant Sensible (Btu/h)	Time Delay Sensible (Btu/h)	Latent (Btu/h)	Total (Btu/h)	Percent of Total (%)
Roof	0	0	0	0	0.0
Other Roof	0	0	0	0	0.0
Glass	-384	0	0	-384	104.3
Door	0	0	0	0	0.0
Wall	0	0	0	0	0.0
Below-Grade Wall	0	0	0	0	0.0
Other Wall	0	0	0	0	0.0
Partition	0	62	0	62	-16.7
Exterior Floor	0	0	0	0	0.0
Interior Floor	0	0	0	0	0.0
Slab	0	-1	0	-1	0.4
Other Floor	0	0	0	0	0.0
Infiltration	0	0	0	0	0.0
Envelope Subtotal	-384	60	0	-324	-
People	0	0	0	0	0.0
Lights	0	0	0	0	0.0
RA Sensible (Lights)	0	0	0	0	0.0
Miscellaneous Loads	0	0	0	0	0.0
Internal Subtotal	0	0	0	0	-
RA (All Other)	0	0	0	0	0.0
DOA Direct to Room	0	0	0	0	0.0
Ceiling	0	-44	0	-44	12.1
Refrigeration	0	0	0	0	0.0
Service Water	0	0	0	0	0.0
HVAC Equipment Losses	0	0	0	0	0.0
Adj Air Transfer Heat	0	0	0	0	0.0
Sizing Factor Correction	0	0	0	0	0.0
Time Delay Correction	0	0	0	0	0.0
Grand Total	-384	16	0	-368	100.0

Engineering Checks

Heating Mbh	-0.37	Input Ventilation cfm	11
Heating cfm	35.63	Calculated Ventilation cfm	10
ft²/Mbh	-341.25	Number of People	0.63
cfm/Mbh	-96.70	People per 1000 ft²	5
Conditioned ft²	125.7		

ROOM_Room 00-82

Conditions at Time of Cooling Peak

Outside	DB / WB / HR	82.8 °F	/	68.2 °F	/	80.3 gr/lb
Room	DB / RH / HR	75.0 °F	/	49.9 %	/	64.4 gr/lb

	Instant Sensible (Btu/h)	Time Delay Sensible (Btu/h)	Latent (Btu/h)	Total (Btu/h)	Percent of Total (%)
Roof	0	0	0	0	0.0
Other Roof	0	0	0	0	0.0
Glass	1099	-948	0	151	4.6
Door	0	0	0	0	0.0
Wall	0	465	0	465	14.3
Below-Grade Wall	0	0	0	0	0.0
Other Wall	0	0	0	0	0.0
Partition	0	452	0	452	13.9
Exterior Floor	0	0	0	0	0.0
Interior Floor	0	0	0	0	0.0
Slab	0	15	0	15	0.5
Other Floor	0	0	0	0	0.0
Infiltration	0	0	0	0	0.0
Envelope Subtotal	1099	-16	0	1083	-
People	79	-45	151	184	5.6
Lights	136	-117	0	19	0.6
RA Sensible (Lights)	156	0	0	156	4.8
Miscellaneous Loads	308	-104	0	205	6.3
Internal Subtotal	680	-266	151	564	-
RA (All Other)	0	0	0	0	0.0
DOA Direct to Room	0	0	0	0	0.0
Ceiling	0	1675	0	1675	51.4
Refrigeration	0	0	0	0	0.0
Service Water	0	0	0	0	0.0
HVAC Equipment Losses	0	0	0	0	0.0
Adj Air Transfer Heat	0	0	0	0	0.0
Sizing Factor Correction	0	0	0	0	0.0
Time Delay Correction	0	-60	0	-60	-1.8
Grand Total	1778	1333	151	3262	100.0

Engineering Checks

Cooling tons	0.27	Input Ventilation cfm	13
Cooling cfm	142.24	Calculated Ventilation cfm	22
ft²/ton	553.99	Number of People	0.75
cfm/ton	523.14	People per 1000 ft²	5
Conditioned ft²	150.6		

Conditions at Time of Heating Peak

Outside	DB / WB / HR	16.4 °F	/	12.6 °F	/	5.3 gr/lb
Room	DB / RH / HR	70.0 °F	/	4.9 %	/	5.2 gr/lb

	Instant Sensible (Btu/h)	Time Delay Sensible (Btu/h)	Latent (Btu/h)	Total (Btu/h)	Percent of Total (%)
Roof	0	0	0	0	0.0
Other Roof	0	0	0	0	0.0
Glass	-454	0	0	-454	57.2
Door	0	0	0	0	0.0
Wall	0	-221	0	-221	27.8
Below-Grade Wall	0	0	0	0	0.0
Other Wall	0	0	0	0	0.0
Partition	0	9	0	9	-1.1
Exterior Floor	0	0	0	0	0.0
Interior Floor	0	0	0	0	0.0
Slab	0	-2	0	-2	0.2
Other Floor	0	0	0	0	0.0
Infiltration	0	0	0	0	0.0
Envelope Subtotal	-454	-213	0	-668	-
People	0	0	0	0	0.0
Lights	0	0	0	0	0.0
RA Sensible (Lights)	0	0	0	0	0.0
Miscellaneous Loads	0	0	0	0	0.0
Internal Subtotal	0	0	0	0	-
RA (All Other)	0	0	0	0	0.0
DOA Direct to Room	0	0	0	0	0.0
Ceiling	0	-127	0	-127	16.0
Refrigeration	0	0	0	0	0.0
Service Water	0	0	0	0	0.0
HVAC Equipment Losses	0	0	0	0	0.0
Adj Air Transfer Heat	0	0	0	0	0.0
Sizing Factor Correction	0	0	0	0	0.0
Time Delay Correction	0	0	0	0	0.0
Grand Total	-454	-340	0	-794	100.0

Engineering Checks

Heating Mbh	-0.79	Input Ventilation cfm	13
Heating cfm	42.67	Calculated Ventilation cfm	12
ft²/Mbh	-189.57	Number of People	0.75
cfm/Mbh	-53.71	People per 1000 ft²	5
Conditioned ft²	150.6		

ROOM_Room 00-83

Conditions at Time of Cooling Peak

Outside	DB / WB / HR	74.8 °F	/	62.5 °F	/	65.2 gr/lb
Room	DB / RH / HR	75.0 °F	/	50.2 %	/	64.9 gr/lb

	Instant Sensible (Btu/h)	Time Delay Sensible (Btu/h)	Latent (Btu/h)	Total (Btu/h)	Percent of Total (%)
Roof	0	0	0	0	0.0
Other Roof	0	0	0	0	0.0
Glass	1063	957	0	2020	68.9
Door	0	-12	0	-12	-0.4
Wall	0	0	0	0	0.0
Below-Grade Wall	0	0	0	0	0.0
Other Wall	0	0	0	0	0.0
Partition	0	-146	0	-146	-5.0
Exterior Floor	0	0	0	0	0.0
Interior Floor	0	0	0	0	0.0
Slab	0	-212	0	-212	-7.2
Other Floor	0	0	0	0	0.0
Infiltration	0	0	0	0	0.0
Envelope Subtotal	1063	587	0	1650	-
People	88	127	168	383	13.1
Lights	151	228	0	380	13.0
RA Sensible (Lights)	174	0	0	174	5.9
Miscellaneous Loads	343	279	0	622	21.2
Internal Subtotal	757	634	168	1559	-
RA (All Other)	0	0	0	0	0.0
DOA Direct to Room	0	0	0	0	0.0
Ceiling	0	-57	0	-57	-1.9
Refrigeration	0	0	0	0	0.0
Service Water	0	0	0	0	0.0
HVAC Equipment Losses	0	0	0	0	0.0
Adj Air Transfer Heat	0	0	0	0	0.0
Sizing Factor Correction	0	0	0	0	0.0
Time Delay Correction	0	-220	0	-220	-7.5
Grand Total	1820	944	168	2932	100.0

Engineering Checks

Cooling tons	0.24	Input Ventilation cfm	14
Cooling cfm	158.44	Calculated Ventilation cfm	24
ft²/ton	686.97	Number of People	0.84
cfm/ton	648.43	People per 1000 ft²	5
Conditioned ft²	167.8		

Conditions at Time of Heating Peak

Outside	DB / WB / HR	16.4 °F	/	12.6 °F	/	5.3 gr/lb
Room	DB / RH / HR	70.0 °F	/	4.9 %	/	5.2 gr/lb

	Instant Sensible (Btu/h)	Time Delay Sensible (Btu/h)	Latent (Btu/h)	Total (Btu/h)	Percent of Total (%)
Roof	0	0	0	0	0.0
Other Roof	0	0	0	0	0.0
Glass	-398	0	0	-398	113.3
Door	0	11	0	11	-3.1
Wall	0	0	0	0	0.0
Below-Grade Wall	0	0	0	0	0.0
Other Wall	0	0	0	0	0.0
Partition	0	112	0	112	-32.0
Exterior Floor	0	0	0	0	0.0
Interior Floor	0	0	0	0	0.0
Slab	0	-1	0	-1	0.3
Other Floor	0	0	0	0	0.0
Infiltration	0	0	0	0	0.0
Envelope Subtotal	-398	122	0	-275	-
People	0	0	0	0	0.0
Lights	0	0	0	0	0.0
RA Sensible (Lights)	0	0	0	0	0.0
Miscellaneous Loads	0	0	0	0	0.0
Internal Subtotal	0	0	0	0	-
RA (All Other)	0	0	0	0	0.0
DOA Direct to Room	0	0	0	0	0.0
Ceiling	0	-76	0	-76	21.5
Refrigeration	0	0	0	0	0.0
Service Water	0	0	0	0	0.0
HVAC Equipment Losses	0	0	0	0	0.0
Adj Air Transfer Heat	0	0	0	0	0.0
Sizing Factor Correction	0	0	0	0	0.0
Time Delay Correction	0	0	0	0	0.0
Grand Total	-398	47	0	-351	100.0

Engineering Checks

Heating Mbh	-0.35	Input Ventilation cfm	14
Heating cfm	47.53	Calculated Ventilation cfm	13
ft²/Mbh	-478.12	Number of People	0.84
cfm/Mbh	-135.42	People per 1000 ft²	5
Conditioned ft²	167.8		

ROOM_Room 00-84

Conditions at Time of Cooling Peak

Outside	DB / WB / HR	74.4 °F	/	62.3 °F	/	65.2 gr/lb
Room	DB / RH / HR	75.0 °F	/	50.5 %	/	65.3 gr/lb

	Instant Sensible (Btu/h)	Time Delay Sensible (Btu/h)	Latent (Btu/h)	Total (Btu/h)	Percent of Total (%)
Roof	0	0	0	0	0.0
Other Roof	0	0	0	0	0.0
Glass	1294	739	0	2033	55.2
Door	0	-7	0	-7	-0.2
Wall	0	0	0	0	0.0
Below-Grade Wall	0	0	0	0	0.0
Other Wall	0	0	0	0	0.0
Partition	0	-212	0	-212	-5.7
Exterior Floor	0	0	0	0	0.0
Interior Floor	0	0	0	0	0.0
Slab	0	-199	0	-199	-5.4
Other Floor	0	0	0	0	0.0
Infiltration	0	0	0	0	0.0
Envelope Subtotal	1294	321	0	1615	-
People	132	179	252	563	15.3
Lights	227	351	0	579	15.7
RA Sensible (Lights)	261	0	0	261	7.1
Miscellaneous Loads	515	397	0	912	24.8
Internal Subtotal	1136	927	252	2315	-
RA (All Other)	0	0	0	0	0.0
DOA Direct to Room	0	0	0	0	0.0
Ceiling	0	-34	0	-34	-0.9
Refrigeration	0	0	0	0	0.0
Service Water	0	0	0	0	0.0
HVAC Equipment Losses	0	0	0	0	0.0
Adj Air Transfer Heat	0	0	0	0	0.0
Sizing Factor Correction	0	0	0	0	0.0
Time Delay Correction	0	-212	0	-212	-5.7
Grand Total	2430	1003	252	3684	100.0

Engineering Checks

Cooling tons	0.31	Input Ventilation cfm	21
Cooling cfm	237.74	Calculated Ventilation cfm	36
ft²/ton	820.13	Number of People	1.26
cfm/ton	774.21	People per 1000 ft²	5
Conditioned ft²	251.8		

Conditions at Time of Heating Peak

Outside	DB / WB / HR	16.4 °F	/	12.6 °F	/	5.3 gr/lb
Room	DB / RH / HR	70.0 °F	/	4.9 %	/	5.2 gr/lb

	Instant Sensible (Btu/h)	Time Delay Sensible (Btu/h)	Latent (Btu/h)	Total (Btu/h)	Percent of Total (%)
Roof	0	0	0	0	0.0
Other Roof	0	0	0	0	0.0
Glass	-356	0	0	-356	95.5
Door	0	3	0	3	-0.9
Wall	0	0	0	0	0.0
Below-Grade Wall	0	0	0	0	0.0
Other Wall	0	0	0	0	0.0
Partition	0	74	0	74	-19.7
Exterior Floor	0	0	0	0	0.0
Interior Floor	0	0	0	0	0.0
Slab	0	-1	0	-1	0.4
Other Floor	0	0	0	0	0.0
Infiltration	0	0	0	0	0.0
Envelope Subtotal	-356	75	0	-281	-
People	0	0	0	0	0.0
Lights	0	0	0	0	0.0
RA Sensible (Lights)	0	0	0	0	0.0
Miscellaneous Loads	0	0	0	0	0.0
Internal Subtotal	0	0	0	0	-
RA (All Other)	0	0	0	0	0.0
DOA Direct to Room	0	0	0	0	0.0
Ceiling	0	-92	0	-92	24.8
Refrigeration	0	0	0	0	0.0
Service Water	0	0	0	0	0.0
HVAC Equipment Losses	0	0	0	0	0.0
Adj Air Transfer Heat	0	0	0	0	0.0
Sizing Factor Correction	0	0	0	0	0.0
Time Delay Correction	0	0	0	0	0.0
Grand Total	-356	-17	0	-373	100.0

Engineering Checks

Heating Mbh	-0.37	Input Ventilation cfm	21
Heating cfm	71.32	Calculated Ventilation cfm	20
ft²/Mbh	-675.17	Number of People	1.26
cfm/Mbh	-191.25	People per 1000 ft²	5
Conditioned ft²	251.8		

ROOM_Room 00-85

Conditions at Time of Cooling Peak

Outside	DB / WB / HR	83.3 °F	/	71.3 °F	/	96.6 gr/lb
Room	DB / RH / HR	75.0 °F	/	49.9 %	/	64.5 gr/lb

	Instant Sensible (Btu/h)	Time Delay Sensible (Btu/h)	Latent (Btu/h)	Total (Btu/h)	Percent of Total (%)
Roof	0	0	0	0	0.0
Other Roof	0	0	0	0	0.0
Glass	1085	-2189	0	-1104	-36.2
Door	0	344	0	344	11.3
Wall	0	814	0	814	26.7
Below-Grade Wall	0	0	0	0	0.0
Other Wall	0	0	0	0	0.0
Partition	0	1257	0	1257	41.2
Exterior Floor	0	0	0	0	0.0
Interior Floor	0	0	0	0	0.0
Slab	0	593	0	593	19.5
Other Floor	0	0	0	0	0.0
Infiltration	0	0	0	0	0.0
Envelope Subtotal	1085	819	0	1904	-
People	75	12	144	231	7.6
Lights	130	-108	0	22	0.7
RA Sensible (Lights)	149	0	0	149	4.9
Miscellaneous Loads	294	2	0	296	9.7
Internal Subtotal	648	-93	144	698	-
RA (All Other)	0	0	0	0	0.0
DOA Direct to Room	0	0	0	0	0.0
Ceiling	0	940	0	940	30.8
Refrigeration	0	0	0	0	0.0
Service Water	0	0	0	0	0.0
HVAC Equipment Losses	0	0	0	0	0.0
Adj Air Transfer Heat	0	0	0	0	0.0
Sizing Factor Correction	0	0	0	0	0.0
Time Delay Correction	0	-494	0	-494	-16.2
Grand Total	1733	1171	144	3048	100.0

Engineering Checks

Cooling tons	0.25	Input Ventilation cfm	12
Cooling cfm	135.70	Calculated Ventilation cfm	21
ft²/ton	565.83	Number of People	0.72
cfm/ton	534.19	People per 1000 ft²	5
Conditioned ft²	143.7		

Conditions at Time of Heating Peak

Outside	DB / WB / HR	16.4 °F	/	12.6 °F	/	5.3 gr/lb
Room	DB / RH / HR	70.0 °F	/	4.9 %	/	5.2 gr/lb

	Instant Sensible (Btu/h)	Time Delay Sensible (Btu/h)	Latent (Btu/h)	Total (Btu/h)	Percent of Total (%)
Roof	0	0	0	0	0.0
Other Roof	0	0	0	0	0.0
Glass	-437	0	0	-437	58.8
Door	0	-11	0	-11	1.4
Wall	0	-195	0	-195	26.3
Below-Grade Wall	0	0	0	0	0.0
Other Wall	0	0	0	0	0.0
Partition	0	22	0	22	-2.9
Exterior Floor	0	0	0	0	0.0
Interior Floor	0	0	0	0	0.0
Slab	0	-2	0	-2	0.2
Other Floor	0	0	0	0	0.0
Infiltration	0	0	0	0	0.0
Envelope Subtotal	-437	-186	0	-623	-
People	0	0	0	0	0.0
Lights	0	0	0	0	0.0
RA Sensible (Lights)	0	0	0	0	0.0
Miscellaneous Loads	0	0	0	0	0.0
Internal Subtotal	0	0	0	0	-
RA (All Other)	0	0	0	0	0.0
DOA Direct to Room	0	0	0	0	0.0
Ceiling	0	-121	0	-121	16.2
Refrigeration	0	0	0	0	0.0
Service Water	0	0	0	0	0.0
HVAC Equipment Losses	0	0	0	0	0.0
Adj Air Transfer Heat	0	0	0	0	0.0
Sizing Factor Correction	0	0	0	0	0.0
Time Delay Correction	0	0	0	0	0.0
Grand Total	-437	-306	0	-743	100.0

Engineering Checks

Heating Mbh	-0.74	Input Ventilation cfm	12
Heating cfm	40.71	Calculated Ventilation cfm	11
ft²/Mbh	-193.40	Number of People	0.72
cfm/Mbh	-54.79	People per 1000 ft²	5
Conditioned ft²	143.7		

ROOM_Room 01-79

Conditions at Time of Cooling Peak

Outside	DB / WB / HR	87.8 °F	/	73.1 °F	/	99.5 gr/lb
Room	DB / RH / HR	75.0 °F	/	49.4 %	/	63.8 gr/lb

	Instant Sensible (Btu/h)	Time Delay Sensible (Btu/h)	Latent (Btu/h)	Total (Btu/h)	Percent of Total (%)
Roof	0	0	0	0	0.0
Other Roof	0	0	0	0	0.0
Glass	810	2345	0	3155	128.6
Door	0	0	0	0	0.0
Wall	0	0	0	0	0.0
Below-Grade Wall	0	0	0	0	0.0
Other Wall	0	0	0	0	0.0
Partition	0	-541	0	-541	-22.1
Exterior Floor	0	0	0	0	0.0
Interior Floor	0	-610	0	-610	-24.9
Slab	0	0	0	0	0.0
Other Floor	0	0	0	0	0.0
Infiltration	0	0	0	0	0.0
Envelope Subtotal	810	1194	0	2004	-
People	37	133	71	240	9.8
Lights	64	220	0	283	11.6
RA Sensible (Lights)	73	0	0	73	3.0
Miscellaneous Loads	144	277	0	421	17.2
Internal Subtotal	318	629	71	1018	-
RA (All Other)	0	0	0	0	0.0
DOA Direct to Room	0	0	0	0	0.0
Ceiling	0	-329	0	-329	-13.4
Refrigeration	0	0	0	0	0.0
Service Water	0	0	0	0	0.0
HVAC Equipment Losses	0	0	0	0	0.0
Adj Air Transfer Heat	0	0	0	0	0.0
Sizing Factor Correction	0	0	0	0	0.0
Time Delay Correction	0	-241	0	-241	-9.8
Grand Total	1128	1254	71	2452	100.0

Engineering Checks

Cooling tons	0.20	Input Ventilation cfm	6
Cooling cfm	105.64	Calculated Ventilation cfm	15
ft²/ton	345.01	Number of People	0.35
cfm/ton	516.79	People per 1000 ft²	5
Conditioned ft²	70.5		

Conditions at Time of Heating Peak

Outside	DB / WB / HR	16.4 °F	/	12.6 °F	/	5.3 gr/lb
Room	DB / RH / HR	70.0 °F	/	4.9 %	/	5.2 gr/lb

	Instant Sensible (Btu/h)	Time Delay Sensible (Btu/h)	Latent (Btu/h)	Total (Btu/h)	Percent of Total (%)
Roof	0	0	0	0	0.0
Other Roof	0	0	0	0	0.0
Glass	-518	0	0	-518	118.5
Door	0	0	0	0	0.0
Wall	0	0	0	0	0.0
Below-Grade Wall	0	0	0	0	0.0
Other Wall	0	0	0	0	0.0
Partition	0	278	0	278	-63.5
Exterior Floor	0	0	0	0	0.0
Interior Floor	0	11	0	11	-2.5
Slab	0	0	0	0	0.0
Other Floor	0	0	0	0	0.0
Infiltration	0	0	0	0	0.0
Envelope Subtotal	-518	288	0	-230	-
People	0	0	0	0	0.0
Lights	0	0	0	0	0.0
RA Sensible (Lights)	0	0	0	0	0.0
Miscellaneous Loads	0	0	0	0	0.0
Internal Subtotal	0	0	0	0	-
RA (All Other)	0	0	0	0	0.0
DOA Direct to Room	0	0	0	0	0.0
Ceiling	0	-207	0	-207	47.5
Refrigeration	0	0	0	0	0.0
Service Water	0	0	0	0	0.0
HVAC Equipment Losses	0	0	0	0	0.0
Adj Air Transfer Heat	0	0	0	0	0.0
Sizing Factor Correction	0	0	0	0	0.0
Time Delay Correction	0	0	0	0	0.0
Grand Total	-518	81	0	-437	100.0

Engineering Checks

Heating Mbh	-0.44	Input Ventilation cfm	6
Heating cfm	31.69	Calculated Ventilation cfm	8
ft²/Mbh	-161.31	Number of People	0.35
cfm/Mbh	-72.51	People per 1000 ft²	5
Conditioned ft²	70.5		

ROOM_Room 01-80

Conditions at Time of Cooling Peak

Outside	DB / WB / HR	83.9 °F	/	71.2 °F	/	95.0 gr/lb
Room	DB / RH / HR	75.0 °F	/	49.8 %	/	64.4 gr/lb

	Instant Sensible (Btu/h)	Time Delay Sensible (Btu/h)	Latent (Btu/h)	Total (Btu/h)	Percent of Total (%)
Roof	0	0	0	0	0.0
Other Roof	0	0	0	0	0.0
Glass	907	1349	0	2256	93.1
Door	0	-108	0	-108	-4.5
Wall	0	0	0	0	0.0
Below-Grade Wall	0	0	0	0	0.0
Other Wall	0	0	0	0	0.0
Partition	0	-500	0	-500	-20.6
Exterior Floor	0	0	0	0	0.0
Interior Floor	0	-342	0	-342	-14.1
Slab	0	0	0	0	0.0
Other Floor	0	0	0	0	0.0
Infiltration	0	0	0	0	0.0
Envelope Subtotal	907	399	0	1306	-
People	57	186	109	352	14.5
Lights	98	303	0	401	16.5
RA Sensible (Lights)	113	0	0	113	4.7
Miscellaneous Loads	223	364	0	587	24.2
Internal Subtotal	492	853	109	1453	-
RA (All Other)	0	0	0	0	0.0
DOA Direct to Room	0	0	0	0	0.0
Ceiling	0	-60	0	-60	-2.5
Refrigeration	0	0	0	0	0.0
Service Water	0	0	0	0	0.0
HVAC Equipment Losses	0	0	0	0	0.0
Adj Air Transfer Heat	0	0	0	0	0.0
Sizing Factor Correction	0	0	0	0	0.0
Time Delay Correction	0	-276	0	-276	-11.4
Grand Total	1399	916	109	2424	100.0

Engineering Checks

Cooling tons	0.20	Input Ventilation cfm	9
Cooling cfm	102.90	Calculated Ventilation cfm	15
ft²/ton	539.35	Number of People	0.54
cfm/ton	509.35	People per 1000 ft²	5
Conditioned ft²	108.9		

Conditions at Time of Heating Peak

Outside	DB / WB / HR	16.4 °F	/	12.6 °F	/	5.3 gr/lb
Room	DB / RH / HR	70.0 °F	/	4.9 %	/	5.2 gr/lb

	Instant Sensible (Btu/h)	Time Delay Sensible (Btu/h)	Latent (Btu/h)	Total (Btu/h)	Percent of Total (%)
Roof	0	0	0	0	0.0
Other Roof	0	0	0	0	0.0
Glass	-430	0	0	-430	72.9
Door	0	17	0	17	-2.9
Wall	0	0	0	0	0.0
Below-Grade Wall	0	0	0	0	0.0
Other Wall	0	0	0	0	0.0
Partition	0	82	0	82	-13.9
Exterior Floor	0	0	0	0	0.0
Interior Floor	0	43	0	43	-7.2
Slab	0	0	0	0	0.0
Other Floor	0	0	0	0	0.0
Infiltration	0	0	0	0	0.0
Envelope Subtotal	-430	142	0	-288	-
People	0	0	0	0	0.0
Lights	0	0	0	0	0.0
RA Sensible (Lights)	0	0	0	0	0.0
Miscellaneous Loads	0	0	0	0	0.0
Internal Subtotal	0	0	0	0	-
RA (All Other)	0	0	0	0	0.0
DOA Direct to Room	0	0	0	0	0.0
Ceiling	0	-302	0	-302	51.2
Refrigeration	0	0	0	0	0.0
Service Water	0	0	0	0	0.0
HVAC Equipment Losses	0	0	0	0	0.0
Adj Air Transfer Heat	0	0	0	0	0.0
Sizing Factor Correction	0	0	0	0	0.0
Time Delay Correction	0	0	0	0	0.0
Grand Total	-430	-160	0	-590	100.0

Engineering Checks

Heating Mbh	-0.59	Input Ventilation cfm	9
Heating cfm	30.87	Calculated Ventilation cfm	8
ft²/Mbh	-184.75	Number of People	0.54
cfm/Mbh	-52.35	People per 1000 ft²	5
Conditioned ft²	108.9		

ROOM_Room 01-81

Conditions at Time of Cooling Peak

Outside	DB / WB / HR	88.5 °F	/	72.7 °F	/	96.6 gr/lb
Room	DB / RH / HR	75.0 °F	/	49.5 %	/	64.0 gr/lb

	Instant Sensible (Btu/h)	Time Delay Sensible (Btu/h)	Latent (Btu/h)	Total (Btu/h)	Percent of Total (%)
Roof	0	0	0	0	0.0
Other Roof	0	0	0	0	0.0
Glass	1901	2034	0	3935	86.9
Door	0	-69	0	-69	-1.5
Wall	0	116	0	116	2.6
Below-Grade Wall	0	0	0	0	0.0
Other Wall	0	0	0	0	0.0
Partition	0	-257	0	-257	-5.7
Exterior Floor	0	0	0	0	0.0
Interior Floor	0	-612	0	-612	-13.5
Slab	0	0	0	0	0.0
Other Floor	0	0	0	0	0.0
Infiltration	0	0	0	0	0.0
Envelope Subtotal	1901	1211	0	3112	-
People	83	222	159	464	10.3
Lights	144	355	0	498	11.0
RA Sensible (Lights)	165	0	0	165	3.6
Miscellaneous Loads	326	441	0	767	16.9
Internal Subtotal	717	1018	159	1894	-
RA (All Other)	0	0	0	0	0.0
DOA Direct to Room	0	0	0	0	0.0
Ceiling	0	-87	0	-87	-1.9
Refrigeration	0	0	0	0	0.0
Service Water	0	0	0	0	0.0
HVAC Equipment Losses	0	0	0	0	0.0
Adj Air Transfer Heat	0	0	0	0	0.0
Sizing Factor Correction	0	0	0	0	0.0
Time Delay Correction	0	-390	0	-390	-8.6
Grand Total	2618	1751	159	4529	100.0

Engineering Checks

Cooling tons	0.38	Input Ventilation cfm	14
Cooling cfm	192.40	Calculated Ventilation cfm	24
ft²/ton	421.30	Number of People	0.79
cfm/ton	509.69	People per 1000 ft²	5
Conditioned ft²	159.0		

Conditions at Time of Heating Peak

Outside	DB / WB / HR	16.4 °F	/	12.6 °F	/	5.3 gr/lb
Room	DB / RH / HR	70.0 °F	/	4.9 %	/	5.2 gr/lb

	Instant Sensible (Btu/h)	Time Delay Sensible (Btu/h)	Latent (Btu/h)	Total (Btu/h)	Percent of Total (%)
Roof	0	0	0	0	0.0
Other Roof	0	0	0	0	0.0
Glass	-567	0	0	-567	45.6
Door	0	10	0	10	-0.8
Wall	0	-201	0	-201	16.2
Below-Grade Wall	0	0	0	0	0.0
Other Wall	0	0	0	0	0.0
Partition	0	40	0	40	-3.3
Exterior Floor	0	0	0	0	0.0
Interior Floor	0	-33	0	-33	2.7
Slab	0	0	0	0	0.0
Other Floor	0	0	0	0	0.0
Infiltration	0	0	0	0	0.0
Envelope Subtotal	-567	-183	0	-751	-
People	0	0	0	0	0.0
Lights	0	0	0	0	0.0
RA Sensible (Lights)	0	0	0	0	0.0
Miscellaneous Loads	0	0	0	0	0.0
Internal Subtotal	0	0	0	0	-
RA (All Other)	0	0	0	0	0.0
DOA Direct to Room	0	0	0	0	0.0
Ceiling	0	-493	0	-493	39.6
Refrigeration	0	0	0	0	0.0
Service Water	0	0	0	0	0.0
HVAC Equipment Losses	0	0	0	0	0.0
Adj Air Transfer Heat	0	0	0	0	0.0
Sizing Factor Correction	0	0	0	0	0.0
Time Delay Correction	0	0	0	0	0.0
Grand Total	-567	-677	0	-1244	100.0

Engineering Checks

Heating Mbh	-1.24	Input Ventilation cfm	14
Heating cfm	57.72	Calculated Ventilation cfm	16
ft²/Mbh	-127.83	Number of People	0.79
cfm/Mbh	-46.40	People per 1000 ft²	5
Conditioned ft²	159.0		

ROOM_Room 01-82

Conditions at Time of Cooling Peak

Outside	DB / WB / HR	74.8 °F	/	62.5 °F	/	65.2 gr/lb
Room	DB / RH / HR	75.0 °F	/	49.7 %	/	64.3 gr/lb

	Instant Sensible (Btu/h)	Time Delay Sensible (Btu/h)	Latent (Btu/h)	Total (Btu/h)	Percent of Total (%)
Roof	0	0	0	0	0.0
Other Roof	0	0	0	0	0.0
Glass	1257	2127	0	3384	114.1
Door	0	-158	0	-158	-5.3
Wall	0	0	0	0	0.0
Below-Grade Wall	0	0	0	0	0.0
Other Wall	0	0	0	0	0.0
Partition	0	-624	0	-624	-21.0
Exterior Floor	0	0	0	0	0.0
Interior Floor	0	-547	0	-547	-18.4
Slab	0	0	0	0	0.0
Other Floor	0	0	0	0	0.0
Infiltration	0	0	0	0	0.0
Envelope Subtotal	1257	798	0	2055	-
People	67	188	127	382	12.9
Lights	115	321	0	437	14.7
RA Sensible (Lights)	132	0	0	132	4.5
Miscellaneous Loads	261	387	0	648	21.8
Internal Subtotal	575	896	127	1598	-
RA (All Other)	0	0	0	0	0.0
DOA Direct to Room	0	0	0	0	0.0
Ceiling	0	-400	0	-400	-13.5
Refrigeration	0	0	0	0	0.0
Service Water	0	0	0	0	0.0
HVAC Equipment Losses	0	0	0	0	0.0
Adj Air Transfer Heat	0	0	0	0	0.0
Sizing Factor Correction	0	0	0	0	0.0
Time Delay Correction	0	-287	0	-287	-9.7
Grand Total	1832	1006	127	2966	100.0

Engineering Checks

Cooling tons	0.25	Input Ventilation cfm	11
Cooling cfm	123.83	Calculated Ventilation cfm	16
ft²/ton	515.70	Number of People	0.64
cfm/ton	500.91	People per 1000 ft²	5
Conditioned ft²	127.4		

Conditions at Time of Heating Peak

Outside	DB / WB / HR	16.4 °F	/	12.6 °F	/	5.3 gr/lb
Room	DB / RH / HR	70.0 °F	/	4.9 %	/	5.2 gr/lb

	Instant Sensible (Btu/h)	Time Delay Sensible (Btu/h)	Latent (Btu/h)	Total (Btu/h)	Percent of Total (%)
Roof	0	0	0	0	0.0
Other Roof	0	0	0	0	0.0
Glass	-366	0	0	-366	55.2
Door	0	12	0	12	-1.9
Wall	0	0	0	0	0.0
Below-Grade Wall	0	0	0	0	0.0
Other Wall	0	0	0	0	0.0
Partition	0	51	0	51	-7.7
Exterior Floor	0	0	0	0	0.0
Interior Floor	0	4	0	4	-0.6
Slab	0	0	0	0	0.0
Other Floor	0	0	0	0	0.0
Infiltration	0	0	0	0	0.0
Envelope Subtotal	-366	68	0	-298	-
People	0	0	0	0	0.0
Lights	0	0	0	0	0.0
RA Sensible (Lights)	0	0	0	0	0.0
Miscellaneous Loads	0	0	0	0	0.0
Internal Subtotal	0	0	0	0	-
RA (All Other)	0	0	0	0	0.0
DOA Direct to Room	0	0	0	0	0.0
Ceiling	0	-364	0	-364	55.0
Refrigeration	0	0	0	0	0.0
Service Water	0	0	0	0	0.0
HVAC Equipment Losses	0	0	0	0	0.0
Adj Air Transfer Heat	0	0	0	0	0.0
Sizing Factor Correction	0	0	0	0	0.0
Time Delay Correction	0	0	0	0	0.0
Grand Total	-366	-297	0	-663	100.0

Engineering Checks

Heating Mbh	-0.66	Input Ventilation cfm	11
Heating cfm	37.15	Calculated Ventilation cfm	11
ft²/Mbh	-192.37	Number of People	0.64
cfm/Mbh	-56.07	People per 1000 ft²	5
Conditioned ft²	127.4		

ROOM_Room 01-83

Conditions at Time of Cooling Peak

Outside	DB / WB / HR	74.4 °F	/	62.3 °F	/	65.2 gr/lb
Room	DB / RH / HR	75.0 °F	/	49.8 %	/	64.3 gr/lb

	Instant Sensible (Btu/h)	Time Delay Sensible (Btu/h)	Latent (Btu/h)	Total (Btu/h)	Percent of Total (%)
Roof	0	0	0	0	0.0
Other Roof	0	0	0	0	0.0
Glass	645	1702	0	2346	122.7
Door	0	0	0	0	0.0
Wall	0	0	0	0	0.0
Below-Grade Wall	0	0	0	0	0.0
Other Wall	0	0	0	0	0.0
Partition	0	-526	0	-526	-27.5
Exterior Floor	0	0	0	0	0.0
Interior Floor	0	-443	0	-443	-23.2
Slab	0	0	0	0	0.0
Other Floor	0	0	0	0	0.0
Infiltration	0	0	0	0	0.0
Envelope Subtotal	645	733	0	1378	-
People	43	135	83	261	13.6
Lights	75	231	0	306	16.0
RA Sensible (Lights)	86	0	0	86	4.5
Miscellaneous Loads	169	283	0	452	23.7
Internal Subtotal	374	649	83	1105	-
RA (All Other)	0	0	0	0	0.0
DOA Direct to Room	0	0	0	0	0.0
Ceiling	0	-351	0	-351	-18.3
Refrigeration	0	0	0	0	0.0
Service Water	0	0	0	0	0.0
HVAC Equipment Losses	0	0	0	0	0.0
Adj Air Transfer Heat	0	0	0	0	0.0
Sizing Factor Correction	0	0	0	0	0.0
Time Delay Correction	0	-219	0	-219	-11.5
Grand Total	1018	811	83	1912	100.0

Engineering Checks

Cooling tons	0.16	Input Ventilation cfm	7
Cooling cfm	79.78	Calculated Ventilation cfm	10
ft²/ton	519.49	Number of People	0.41
cfm/ton	500.55	People per 1000 ft²	5
Conditioned ft²	82.8		

Conditions at Time of Heating Peak

Outside	DB / WB / HR	16.4 °F	/	12.6 °F	/	5.3 gr/lb
Room	DB / RH / HR	70.0 °F	/	4.9 %	/	5.2 gr/lb

	Instant Sensible (Btu/h)	Time Delay Sensible (Btu/h)	Latent (Btu/h)	Total (Btu/h)	Percent of Total (%)
Roof	0	0	0	0	0.0
Other Roof	0	0	0	0	0.0
Glass	-185	0	0	-185	48.0
Door	0	0	0	0	0.0
Wall	0	0	0	0	0.0
Below-Grade Wall	0	0	0	0	0.0
Other Wall	0	0	0	0	0.0
Partition	0	26	0	26	-6.8
Exterior Floor	0	0	0	0	0.0
Interior Floor	0	8	0	8	-2.1
Slab	0	0	0	0	0.0
Other Floor	0	0	0	0	0.0
Infiltration	0	0	0	0	0.0
Envelope Subtotal	-185	34	0	-151	-
People	0	0	0	0	0.0
Lights	0	0	0	0	0.0
RA Sensible (Lights)	0	0	0	0	0.0
Miscellaneous Loads	0	0	0	0	0.0
Internal Subtotal	0	0	0	0	-
RA (All Other)	0	0	0	0	0.0
DOA Direct to Room	0	0	0	0	0.0
Ceiling	0	-234	0	-234	60.9
Refrigeration	0	0	0	0	0.0
Service Water	0	0	0	0	0.0
HVAC Equipment Losses	0	0	0	0	0.0
Adj Air Transfer Heat	0	0	0	0	0.0
Sizing Factor Correction	0	0	0	0	0.0
Time Delay Correction	0	0	0	0	0.0
Grand Total	-185	-200	0	-385	100.0

Engineering Checks

Heating Mbh	-0.39	Input Ventilation cfm	7
Heating cfm	23.93	Calculated Ventilation cfm	7
ft²/Mbh	-214.94	Number of People	0.41
cfm/Mbh	-62.14	People per 1000 ft²	5
Conditioned ft²	82.8		

ROOM_Room 01-84

Conditions at Time of Cooling Peak

Outside	DB / WB / HR	83.8 °F	/	68.5 °F	/	80.3 gr/lb
Room	DB / RH / HR	75.0 °F	/	50.0 %	/	64.6 gr/lb

	Instant Sensible (Btu/h)	Time Delay Sensible (Btu/h)	Latent (Btu/h)	Total (Btu/h)	Percent of Total (%)
Roof	0	0	0	0	0.0
Other Roof	0	0	0	0	0.0
Glass	988	1235	0	2223	92.8
Door	0	-61	0	-61	-2.5
Wall	0	0	0	0	0.0
Below-Grade Wall	0	0	0	0	0.0
Other Wall	0	0	0	0	0.0
Partition	0	-332	0	-332	-13.9
Exterior Floor	0	0	0	0	0.0
Interior Floor	0	-401	0	-401	-16.7
Slab	0	0	0	0	0.0
Other Floor	0	0	0	0	0.0
Infiltration	0	0	0	0	0.0
Envelope Subtotal	988	441	0	1428	-
People	63	177	120	361	15.1
Lights	109	296	0	405	16.9
RA Sensible (Lights)	125	0	0	125	5.2
Miscellaneous Loads	247	374	0	621	25.9
Internal Subtotal	543	848	120	1511	-
RA (All Other)	0	0	0	0	0.0
DOA Direct to Room	0	0	0	0	0.0
Ceiling	0	-214	0	-214	-8.9
Refrigeration	0	0	0	0	0.0
Service Water	0	0	0	0	0.0
HVAC Equipment Losses	0	0	0	0	0.0
Adj Air Transfer Heat	0	0	0	0	0.0
Sizing Factor Correction	0	0	0	0	0.0
Time Delay Correction	0	-331	0	-331	-13.8
Grand Total	1531	744	120	2395	100.0

Engineering Checks

Cooling tons	0.20	Input Ventilation cfm	10
Cooling cfm	113.74	Calculated Ventilation cfm	14
ft²/ton	603.55	Number of People	0.60
cfm/ton	569.77	People per 1000 ft²	5
Conditioned ft²	120.4		

Conditions at Time of Heating Peak

Outside	DB / WB / HR	16.4 °F	/	12.6 °F	/	5.3 gr/lb
Room	DB / RH / HR	70.0 °F	/	4.9 %	/	5.2 gr/lb

	Instant Sensible (Btu/h)	Time Delay Sensible (Btu/h)	Latent (Btu/h)	Total (Btu/h)	Percent of Total (%)
Roof	0	0	0	0	0.0
Other Roof	0	0	0	0	0.0
Glass	-238	0	0	-238	45.1
Door	0	4	0	4	-0.7
Wall	0	0	0	0	0.0
Below-Grade Wall	0	0	0	0	0.0
Other Wall	0	0	0	0	0.0
Partition	0	23	0	23	-4.3
Exterior Floor	0	0	0	0	0.0
Interior Floor	0	10	0	10	-1.9
Slab	0	0	0	0	0.0
Other Floor	0	0	0	0	0.0
Infiltration	0	0	0	0	0.0
Envelope Subtotal	-238	36	0	-202	-
People	0	0	0	0	0.0
Lights	0	0	0	0	0.0
RA Sensible (Lights)	0	0	0	0	0.0
Miscellaneous Loads	0	0	0	0	0.0
Internal Subtotal	0	0	0	0	-
RA (All Other)	0	0	0	0	0.0
DOA Direct to Room	0	0	0	0	0.0
Ceiling	0	-326	0	-326	61.8
Refrigeration	0	0	0	0	0.0
Service Water	0	0	0	0	0.0
HVAC Equipment Losses	0	0	0	0	0.0
Adj Air Transfer Heat	0	0	0	0	0.0
Sizing Factor Correction	0	0	0	0	0.0
Time Delay Correction	0	0	0	0	0.0
Grand Total	-238	-290	0	-528	100.0

Engineering Checks

Heating Mbh	-0.53	Input Ventilation cfm	10
Heating cfm	34.12	Calculated Ventilation cfm	10
ft²/Mbh	-228.15	Number of People	0.60
cfm/Mbh	-64.63	People per 1000 ft²	5
Conditioned ft²	120.4		

ROOM_Room 01-85

Conditions at Time of Cooling Peak

Outside	DB / WB / HR	74.4 °F	/	62.3 °F	/	65.2 gr/lb
Room	DB / RH / HR	75.0 °F	/	49.8 %	/	64.4 gr/lb

	Instant Sensible (Btu/h)	Time Delay Sensible (Btu/h)	Latent (Btu/h)	Total (Btu/h)	Percent of Total (%)
Roof	0	0	0	0	0.0
Other Roof	0	0	0	0	0.0
Glass	1328	2034	0	3362	110.8
Door	0	-74	0	-74	-2.4
Wall	0	0	0	0	0.0
Below-Grade Wall	0	0	0	0	0.0
Other Wall	0	0	0	0	0.0
Partition	0	-743	0	-743	-24.5
Exterior Floor	0	0	0	0	0.0
Interior Floor	0	-559	0	-559	-18.4
Slab	0	0	0	0	0.0
Other Floor	0	0	0	0	0.0
Infiltration	0	0	0	0	0.0
Envelope Subtotal	1328	658	0	1986	-
People	73	201	139	412	13.6
Lights	125	355	0	480	15.8
RA Sensible (Lights)	144	0	0	144	4.7
Miscellaneous Loads	284	424	0	708	23.3
Internal Subtotal	626	979	139	1744	-
RA (All Other)	0	0	0	0	0.0
DOA Direct to Room	0	0	0	0	0.0
Ceiling	0	-392	0	-392	-12.9
Refrigeration	0	0	0	0	0.0
Service Water	0	0	0	0	0.0
HVAC Equipment Losses	0	0	0	0	0.0
Adj Air Transfer Heat	0	0	0	0	0.0
Sizing Factor Correction	0	0	0	0	0.0
Time Delay Correction	0	-303	0	-303	-10.0
Grand Total	1954	943	139	3035	100.0

Engineering Checks

Cooling tons	0.25	Input Ventilation cfm	12
Cooling cfm	131.01	Calculated Ventilation cfm	17
ft²/ton	548.61	Number of People	0.69
cfm/ton	517.86	People per 1000 ft²	5
Conditioned ft²	138.7		

Conditions at Time of Heating Peak

Outside	DB / WB / HR	16.4 °F	/	12.6 °F	/	5.3 gr/lb
Room	DB / RH / HR	70.0 °F	/	4.9 %	/	5.2 gr/lb

	Instant Sensible (Btu/h)	Time Delay Sensible (Btu/h)	Latent (Btu/h)	Total (Btu/h)	Percent of Total (%)
Roof	0	0	0	0	0.0
Other Roof	0	0	0	0	0.0
Glass	-354	0	0	-354	52.7
Door	0	5	0	5	-0.8
Wall	0	0	0	0	0.0
Below-Grade Wall	0	0	0	0	0.0
Other Wall	0	0	0	0	0.0
Partition	0	49	0	49	-7.3
Exterior Floor	0	0	0	0	0.0
Interior Floor	0	14	0	14	-2.1
Slab	0	0	0	0	0.0
Other Floor	0	0	0	0	0.0
Infiltration	0	0	0	0	0.0
Envelope Subtotal	-354	68	0	-287	-
People	0	0	0	0	0.0
Lights	0	0	0	0	0.0
RA Sensible (Lights)	0	0	0	0	0.0
Miscellaneous Loads	0	0	0	0	0.0
Internal Subtotal	0	0	0	0	-
RA (All Other)	0	0	0	0	0.0
DOA Direct to Room	0	0	0	0	0.0
Ceiling	0	-386	0	-386	57.4
Refrigeration	0	0	0	0	0.0
Service Water	0	0	0	0	0.0
HVAC Equipment Losses	0	0	0	0	0.0
Adj Air Transfer Heat	0	0	0	0	0.0
Sizing Factor Correction	0	0	0	0	0.0
Time Delay Correction	0	0	0	0	0.0
Grand Total	-354	-318	0	-673	100.0

Engineering Checks

Heating Mbh	-0.67	Input Ventilation cfm	12
Heating cfm	39.30	Calculated Ventilation cfm	11
ft²/Mbh	-206.27	Number of People	0.69
cfm/Mbh	-58.42	People per 1000 ft²	5
Conditioned ft²	138.7		

ROOM_Room 01-86

Conditions at Time of Cooling Peak

Outside	DB / WB / HR	83.3 °F	/	71.3 °F	/	96.6 gr/lb
Room	DB / RH / HR	75.0 °F	/	49.6 %	/	64.1 gr/lb

	Instant Sensible (Btu/h)	Time Delay Sensible (Btu/h)	Latent (Btu/h)	Total (Btu/h)	Percent of Total (%)
Roof	0	0	0	0	0.0
Other Roof	0	0	0	0	0.0
Glass	1591	1772	0	3363	94.1
Door	0	0	0	0	0.0
Wall	0	61	0	61	1.7
Below-Grade Wall	0	0	0	0	0.0
Other Wall	0	0	0	0	0.0
Partition	0	-251	0	-251	-7.0
Exterior Floor	0	0	0	0	0.0
Interior Floor	0	-432	0	-432	-12.1
Slab	0	0	0	0	0.0
Other Floor	0	0	0	0	0.0
Infiltration	0	0	0	0	0.0
Envelope Subtotal	1591	1150	0	2741	-
People	71	162	135	369	10.3
Lights	122	291	0	413	11.6
RA Sensible (Lights)	140	0	0	140	3.9
Miscellaneous Loads	277	369	0	646	18.1
Internal Subtotal	610	823	135	1568	-
RA (All Other)	0	0	0	0	0.0
DOA Direct to Room	0	0	0	0	0.0
Ceiling	0	-391	0	-391	-10.9
Refrigeration	0	0	0	0	0.0
Service Water	0	0	0	0	0.0
HVAC Equipment Losses	0	0	0	0	0.0
Adj Air Transfer Heat	0	0	0	0	0.0
Sizing Factor Correction	0	0	0	0	0.0
Time Delay Correction	0	-342	0	-342	-9.6
Grand Total	2201	1239	135	3576	100.0

Engineering Checks

Cooling tons	0.30	Input Ventilation cfm	11
Cooling cfm	151.01	Calculated Ventilation cfm	19
ft²/ton	453.76	Number of People	0.68
cfm/ton	506.68	People per 1000 ft²	5
Conditioned ft²	135.2		

Conditions at Time of Heating Peak

Outside	DB / WB / HR	16.4 °F	/	12.6 °F	/	5.3 gr/lb
Room	DB / RH / HR	70.0 °F	/	4.9 %	/	5.2 gr/lb

	Instant Sensible (Btu/h)	Time Delay Sensible (Btu/h)	Latent (Btu/h)	Total (Btu/h)	Percent of Total (%)
Roof	0	0	0	0	0.0
Other Roof	0	0	0	0	0.0
Glass	-489	0	0	-489	44.0
Door	0	0	0	0	0.0
Wall	0	-192	0	-192	17.3
Below-Grade Wall	0	0	0	0	0.0
Other Wall	0	0	0	0	0.0
Partition	0	41	0	41	-3.7
Exterior Floor	0	0	0	0	0.0
Interior Floor	0	-37	0	-37	3.4
Slab	0	0	0	0	0.0
Other Floor	0	0	0	0	0.0
Infiltration	0	0	0	0	0.0
Envelope Subtotal	-489	-189	0	-678	-
People	0	0	0	0	0.0
Lights	0	0	0	0	0.0
RA Sensible (Lights)	0	0	0	0	0.0
Miscellaneous Loads	0	0	0	0	0.0
Internal Subtotal	0	0	0	0	-
RA (All Other)	0	0	0	0	0.0
DOA Direct to Room	0	0	0	0	0.0
Ceiling	0	-433	0	-433	39.0
Refrigeration	0	0	0	0	0.0
Service Water	0	0	0	0	0.0
HVAC Equipment Losses	0	0	0	0	0.0
Adj Air Transfer Heat	0	0	0	0	0.0
Sizing Factor Correction	0	0	0	0	0.0
Time Delay Correction	0	0	0	0	0.0
Grand Total	-489	-622	0	-1111	100.0

Engineering Checks

Heating Mbh	-1.11	Input Ventilation cfm	11
Heating cfm	45.30	Calculated Ventilation cfm	13
ft²/Mbh	-121.74	Number of People	0.68
cfm/Mbh	-40.79	People per 1000 ft²	5
Conditioned ft²	135.2		

ROOM_Room 01-87

Conditions at Time of Cooling Peak

Outside	DB / WB / HR	89.9 °F	/	73.6 °F	/	99.5 gr/lb
Room	DB / RH / HR	75.0 °F	/	49.9 %	/	64.5 gr/lb

	Instant Sensible (Btu/h)	Time Delay Sensible (Btu/h)	Latent (Btu/h)	Total (Btu/h)	Percent of Total (%)
Roof	0	0	0	0	0.0
Other Roof	0	0	0	0	0.0
Glass	1210	788	0	1998	70.3
Door	0	0	0	0	0.0
Wall	0	0	0	0	0.0
Below-Grade Wall	0	0	0	0	0.0
Other Wall	0	0	0	0	0.0
Partition	0	-313	0	-313	-11.0
Exterior Floor	0	0	0	0	0.0
Interior Floor	0	-295	0	-295	-10.4
Slab	0	0	0	0	0.0
Other Floor	0	0	0	0	0.0
Infiltration	0	0	0	0	0.0
Envelope Subtotal	1210	179	0	1390	-
People	73	214	138	425	15.0
Lights	125	353	0	478	16.8
RA Sensible (Lights)	143	0	0	143	5.0
Miscellaneous Loads	283	436	0	719	25.3
Internal Subtotal	624	1003	138	1765	-
RA (All Other)	0	0	0	0	0.0
DOA Direct to Room	0	0	0	0	0.0
Ceiling	0	68	0	68	2.4
Refrigeration	0	0	0	0	0.0
Service Water	0	0	0	0	0.0
HVAC Equipment Losses	0	0	0	0	0.0
Adj Air Transfer Heat	0	0	0	0	0.0
Sizing Factor Correction	0	0	0	0	0.0
Time Delay Correction	0	-380	0	-380	-13.4
Grand Total	1835	870	138	2843	100.0

Engineering Checks

Cooling tons	0.24	Input Ventilation cfm	12
Cooling cfm	130.69	Calculated Ventilation cfm	19
ft²/ton	584.32	Number of People	0.69
cfm/ton	551.49	People per 1000 ft²	5
Conditioned ft²	138.4		

Conditions at Time of Heating Peak

Outside	DB / WB / HR	16.4 °F	/	12.6 °F	/	5.3 gr/lb
Room	DB / RH / HR	70.0 °F	/	4.9 %	/	5.2 gr/lb

	Instant Sensible (Btu/h)	Time Delay Sensible (Btu/h)	Latent (Btu/h)	Total (Btu/h)	Percent of Total (%)
Roof	0	0	0	0	0.0
Other Roof	0	0	0	0	0.0
Glass	-439	0	0	-439	56.1
Door	0	0	0	0	0.0
Wall	0	0	0	0	0.0
Below-Grade Wall	0	0	0	0	0.0
Other Wall	0	0	0	0	0.0
Partition	0	50	0	50	-6.4
Exterior Floor	0	0	0	0	0.0
Interior Floor	0	3	0	3	-0.4
Slab	0	0	0	0	0.0
Other Floor	0	0	0	0	0.0
Infiltration	0	0	0	0	0.0
Envelope Subtotal	-439	53	0	-386	-
People	0	0	0	0	0.0
Lights	0	0	0	0	0.0
RA Sensible (Lights)	0	0	0	0	0.0
Miscellaneous Loads	0	0	0	0	0.0
Internal Subtotal	0	0	0	0	-
RA (All Other)	0	0	0	0	0.0
DOA Direct to Room	0	0	0	0	0.0
Ceiling	0	-396	0	-396	50.7
Refrigeration	0	0	0	0	0.0
Service Water	0	0	0	0	0.0
HVAC Equipment Losses	0	0	0	0	0.0
Adj Air Transfer Heat	0	0	0	0	0.0
Sizing Factor Correction	0	0	0	0	0.0
Time Delay Correction	0	0	0	0	0.0
Grand Total	-439	-343	0	-781	100.0

Engineering Checks

Heating Mbh	-0.78	Input Ventilation cfm	12
Heating cfm	39.21	Calculated Ventilation cfm	10
ft²/Mbh	-177.17	Number of People	0.69
cfm/Mbh	-50.17	People per 1000 ft²	5
Conditioned ft²	138.4		

ROOM_Room 01-88

Conditions at Time of Cooling Peak

Outside	DB / WB / HR	89.9 °F	/	73.6 °F	/	99.5 gr/lb
Room	DB / RH / HR	75.0 °F	/	49.9 %	/	64.5 gr/lb

	Instant Sensible (Btu/h)	Time Delay Sensible (Btu/h)	Latent (Btu/h)	Total (Btu/h)	Percent of Total (%)
Roof	0	0	0	0	0.0
Other Roof	0	0	0	0	0.0
Glass	917	883	0	1800	80.3
Door	0	-40	0	-40	-1.8
Wall	0	0	0	0	0.0
Below-Grade Wall	0	0	0	0	0.0
Other Wall	0	0	0	0	0.0
Partition	0	-341	0	-341	-15.2
Exterior Floor	0	0	0	0	0.0
Interior Floor	0	-282	0	-282	-12.6
Slab	0	0	0	0	0.0
Other Floor	0	0	0	0	0.0
Infiltration	0	0	0	0	0.0
Envelope Subtotal	917	220	0	1137	-
People	57	177	108	341	15.2
Lights	97	287	0	385	17.2
RA Sensible (Lights)	112	0	0	112	5.0
Miscellaneous Loads	221	362	0	582	26.0
Internal Subtotal	486	826	108	1419	-
RA (All Other)	0	0	0	0	0.0
DOA Direct to Room	0	0	0	0	0.0
Ceiling	0	8	0	8	0.4
Refrigeration	0	0	0	0	0.0
Service Water	0	0	0	0	0.0
HVAC Equipment Losses	0	0	0	0	0.0
Adj Air Transfer Heat	0	0	0	0	0.0
Sizing Factor Correction	0	0	0	0	0.0
Time Delay Correction	0	-325	0	-325	-14.5
Grand Total	1403	730	108	2241	100.0

Engineering Checks

Cooling tons	0.19	Input Ventilation cfm	9
Cooling cfm	101.73	Calculated Ventilation cfm	15
ft²/ton	577.07	Number of People	0.54
cfm/ton	544.67	People per 1000 ft²	5
Conditioned ft²	107.7		

Conditions at Time of Heating Peak

Outside	DB / WB / HR	16.4 °F	/	12.6 °F	/	5.3 gr/lb
Room	DB / RH / HR	70.0 °F	/	4.9 %	/	5.2 gr/lb

	Instant Sensible (Btu/h)	Time Delay Sensible (Btu/h)	Latent (Btu/h)	Total (Btu/h)	Percent of Total (%)
Roof	0	0	0	0	0.0
Other Roof	0	0	0	0	0.0
Glass	-383	0	0	-383	62.1
Door	0	3	0	3	-0.5
Wall	0	0	0	0	0.0
Below-Grade Wall	0	0	0	0	0.0
Other Wall	0	0	0	0	0.0
Partition	0	41	0	41	-6.7
Exterior Floor	0	0	0	0	0.0
Interior Floor	0	35	0	35	-5.7
Slab	0	0	0	0	0.0
Other Floor	0	0	0	0	0.0
Infiltration	0	0	0	0	0.0
Envelope Subtotal	-383	80	0	-303	-
People	0	0	0	0	0.0
Lights	0	0	0	0	0.0
RA Sensible (Lights)	0	0	0	0	0.0
Miscellaneous Loads	0	0	0	0	0.0
Internal Subtotal	0	0	0	0	-
RA (All Other)	0	0	0	0	0.0
DOA Direct to Room	0	0	0	0	0.0
Ceiling	0	-314	0	-314	50.9
Refrigeration	0	0	0	0	0.0
Service Water	0	0	0	0	0.0
HVAC Equipment Losses	0	0	0	0	0.0
Adj Air Transfer Heat	0	0	0	0	0.0
Sizing Factor Correction	0	0	0	0	0.0
Time Delay Correction	0	0	0	0	0.0
Grand Total	-383	-234	0	-617	100.0

Engineering Checks

Heating Mbh	-0.62	Input Ventilation cfm	9
Heating cfm	30.52	Calculated Ventilation cfm	8
ft²/Mbh	-174.75	Number of People	0.54
cfm/Mbh	-49.49	People per 1000 ft²	5
Conditioned ft²	107.7		

ROOM_Room 01-89

Conditions at Time of Cooling Peak

Outside	DB / WB / HR	80.4 °F	/	70.9 °F	/	99.4 gr/lb
Room	DB / RH / HR	75.0 °F	/	49.6 %	/	64.2 gr/lb

	Instant Sensible (Btu/h)	Time Delay Sensible (Btu/h)	Latent (Btu/h)	Total (Btu/h)	Percent of Total (%)
Roof	0	0	0	0	0.0
Other Roof	0	0	0	0	0.0
Glass	2120	10444	0	12564	112.8
Door	0	0	0	0	0.0
Wall	0	28	0	28	0.3
Below-Grade Wall	0	0	0	0	0.0
Other Wall	0	0	0	0	0.0
Partition	0	0	0	0	0.0
Exterior Floor	0	0	0	0	0.0
Interior Floor	0	-4490	0	-4490	-40.3
Slab	0	0	0	0	0.0
Other Floor	0	0	0	0	0.0
Infiltration	0	0	0	0	0.0
Envelope Subtotal	2120	5983	0	8102	-
People	227	406	432	1064	9.6
Lights	390	860	0	1250	11.2
RA Sensible (Lights)	448	0	0	448	4.0
Miscellaneous Loads	884	964	0	1847	16.6
Internal Subtotal	1948	2229	432	4609	-
RA (All Other)	0	0	0	0	0.0
DOA Direct to Room	0	0	0	0	0.0
Ceiling	0	-1044	0	-1044	-9.4
Refrigeration	0	0	0	0	0.0
Service Water	0	0	0	0	0.0
HVAC Equipment Losses	0	0	0	0	0.0
Adj Air Transfer Heat	0	0	0	0	0.0
Sizing Factor Correction	0	0	0	0	0.0
Time Delay Correction	0	-527	0	-527	-4.7
Grand Total	4067	6642	432	11141	100.0

Engineering Checks

Cooling tons	0.93	Input Ventilation cfm	37
Cooling cfm	798.18	Calculated Ventilation cfm	117
ft²/ton	465.09	Number of People	2.16
cfm/ton	859.59	People per 1000 ft²	5
Conditioned ft²	431.7		

Conditions at Time of Heating Peak

Outside	DB / WB / HR	16.4 °F	/	12.6 °F	/	5.3 gr/lb
Room	DB / RH / HR	70.0 °F	/	4.9 %	/	5.2 gr/lb

	Instant Sensible (Btu/h)	Time Delay Sensible (Btu/h)	Latent (Btu/h)	Total (Btu/h)	Percent of Total (%)
Roof	0	0	0	0	0.0
Other Roof	0	0	0	0	0.0
Glass	-4672	0	0	-4672	72.5
Door	0	0	0	0	0.0
Wall	0	-498	0	-498	7.7
Below-Grade Wall	0	0	0	0	0.0
Other Wall	0	0	0	0	0.0
Partition	0	0	0	0	0.0
Exterior Floor	0	0	0	0	0.0
Interior Floor	0	-6	0	-6	0.1
Slab	0	0	0	0	0.0
Other Floor	0	0	0	0	0.0
Infiltration	0	0	0	0	0.0
Envelope Subtotal	-4672	-503	0	-5175	-
People	0	0	0	0	0.0
Lights	0	0	0	0	0.0
RA Sensible (Lights)	0	0	0	0	0.0
Miscellaneous Loads	0	0	0	0	0.0
Internal Subtotal	0	0	0	0	-
RA (All Other)	0	0	0	0	0.0
DOA Direct to Room	0	0	0	0	0.0
Ceiling	0	-1269	0	-1269	19.7
Refrigeration	0	0	0	0	0.0
Service Water	0	0	0	0	0.0
HVAC Equipment Losses	0	0	0	0	0.0
Adj Air Transfer Heat	0	0	0	0	0.0
Sizing Factor Correction	0	0	0	0	0.0
Time Delay Correction	0	0	0	0	0.0
Grand Total	-4672	-1773	0	-6445	100.0

Engineering Checks

Heating Mbh	-6.44	Input Ventilation cfm	37
Heating cfm	239.45	Calculated Ventilation cfm	63
ft²/Mbh	-67.00	Number of People	2.16
cfm/Mbh	-37.15	People per 1000 ft²	5
Conditioned ft²	431.7		

Project Summary

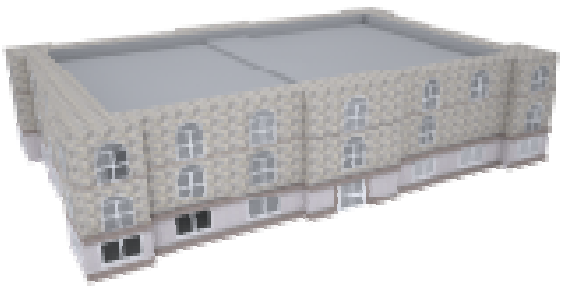

Building Summary

Building Type	
Conditioned Floor Area	39,748 ft²
Total Building Area	40,028 ft²
Gross Wall Area	18,827 ft²
Window-Wall Ratio	36.28 %
Gross Roof Area	21,596 ft²
Skylight-Roof Ratio	0 %
Average Plug Load Density	2.18 W/ft²
Average Lighting Density	0.58 W/ft²
Peak Occupancy	449
Site Ventilation	7,722 ft³/min
Cooling Specific Air Flow	34,717 ft³/min
Heating Specific Air Flow	10,974 ft³/min
Site Peak Cooling Load	101 tons
Site Peak Heating Load	1,901 MBh

Weather Summary

Location	Manassas Muni Awos VA USA
Weather File	USA_VA_Manassas.Muni.AWOS.724036
Latitude	N 38° 43
Longitude	W 77° 31
Time Zone	GMT -5.0 Hours
Summer Design Dry Bulb Temperature (1%)	90.7
Winter Design Dry Bulb Temperature (99%)	16.3
User Defined	
Summer Design Day Dry Bulb Temperature	93.0
Coincident Design Day Wet Bulb Temperature	74.1
Winter Design Day Dry Bulb Temperature	11.8

Project Information

Project Name	FAA WCC 35_EM
Building Owner	
Location	
Program User	
Company	

Site Performance

Net Source Energy Use Intensity (EUI)	178.5 kBtu/ft²
Annual Electrical Consumption	652,642 kWh
Annual Peak Electrical Demand	154 kW
Annual Gas Consumption	87 Mbtu
Annual Water Consumption	0 gal

Building Performance

Unmet cooling load hours (Occupied) — This Building: **4,504 hours (Coincident)**

Less hours — More hours

0 hours — 4,504 hours

Unmet heating load hours (Occupied) — This Building: 81 hours (Coincident)

Less hours — More hours

0 hours — 300 hours

Number of hours not comfortable (ASHRAE 55) — This Building: **4,504 hours (Coincident)**

More comfortable — Less comfortable

0 hours — 4,504 hours

Net Site Energy Intensity — This Building: 57.78 kBtu/ft²

Uses less energy — Uses more energy

0 kBtu/ft² — 349.89 kBtu/ft²

Site Power Generation

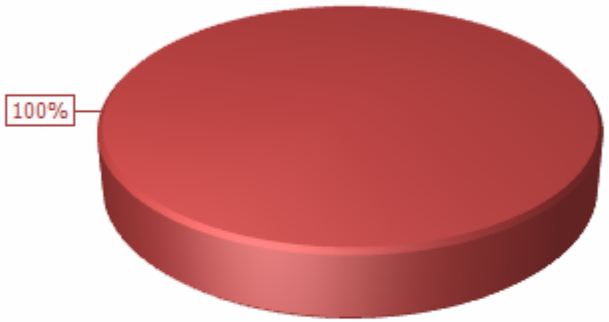

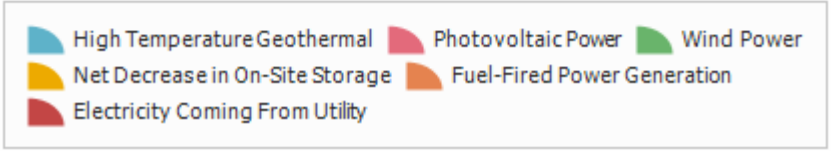

Fuel-Fired Power Generation	0 kWh
High Temperature Geothermal	0 kWh
Photovoltaic Power	0 kWh
Wind Power	0 kWh
Net Decrease in On-Site Storage	0 kWh
Sub-Total On Site Electricity	0 kWh
Electricity Coming From Utility	652,642 kWh
Surplus Electricity To Utility	0 kWh
Net Electricity From Utility	652,642 kWh
Total Electric Sources	652,642 kWh

Site Thermal Energy Recovery

Water-Side Heat Recovery	0 kWh
Air to Air Heat Recovery Cooling	0 kWh
Air to Air Heat Recover Heating	0 kWh
High-Temperature Geothermal	0 kWh
Solar Water Thermal	0 kWh
Solar Air Thermal	0 kWh
Total On-Site Thermal Sources	0 kWh

Alternative Annual Electricity End Use and Demand Comparison

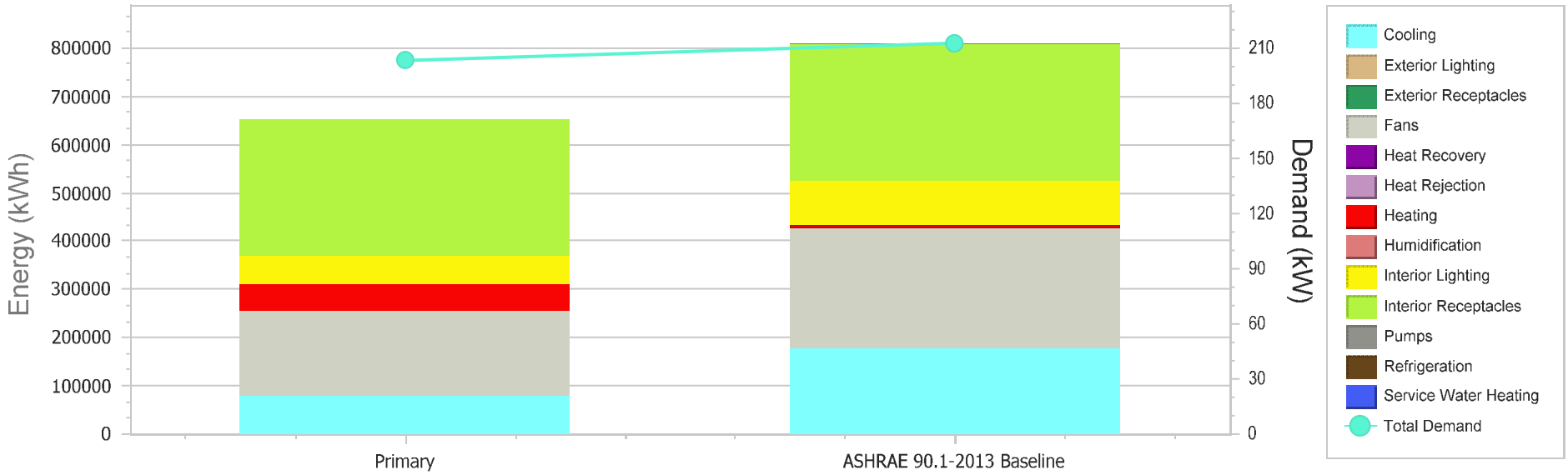

	Primary		ASHRAE 90.1-2013 Baseline	
	Energy (kWh)	Demand (kW)	Energy (kWh)	Demand (kW)
Cooling	80,380.27	49.11	178,654.90	80.50
Exterior Lighting	0.00	0.00	0.00	0.00
Exterior Receptacles	0.00	0.00	0.00	0.00
Fans	175,582.00	24.99	248,229.00	28.77
Heat Recovery	0.00	0.00	0.00	0.00
Heat Rejection	0.00	0.00	0.00	0.00
Heating	54,679.42	48.60	6,081.67	10.79
Humidification	0.00	0.00	0.00	0.00
Interior Lighting	59,577.18	19.90	92,888.25	31.03
Interior Receptacles	282,428.90	61.13	282,428.90	61.13
Pumps	0.00	0.00	379.41	0.59
Refrigeration	0.00	0.00	0.00	0.00
Service Water Heating	0.00	0.00	0.00	0.00
Grand Total	**652,647.77**	**203.73**	**808,662.13**	**212.81**

Economic Alternative Comparison

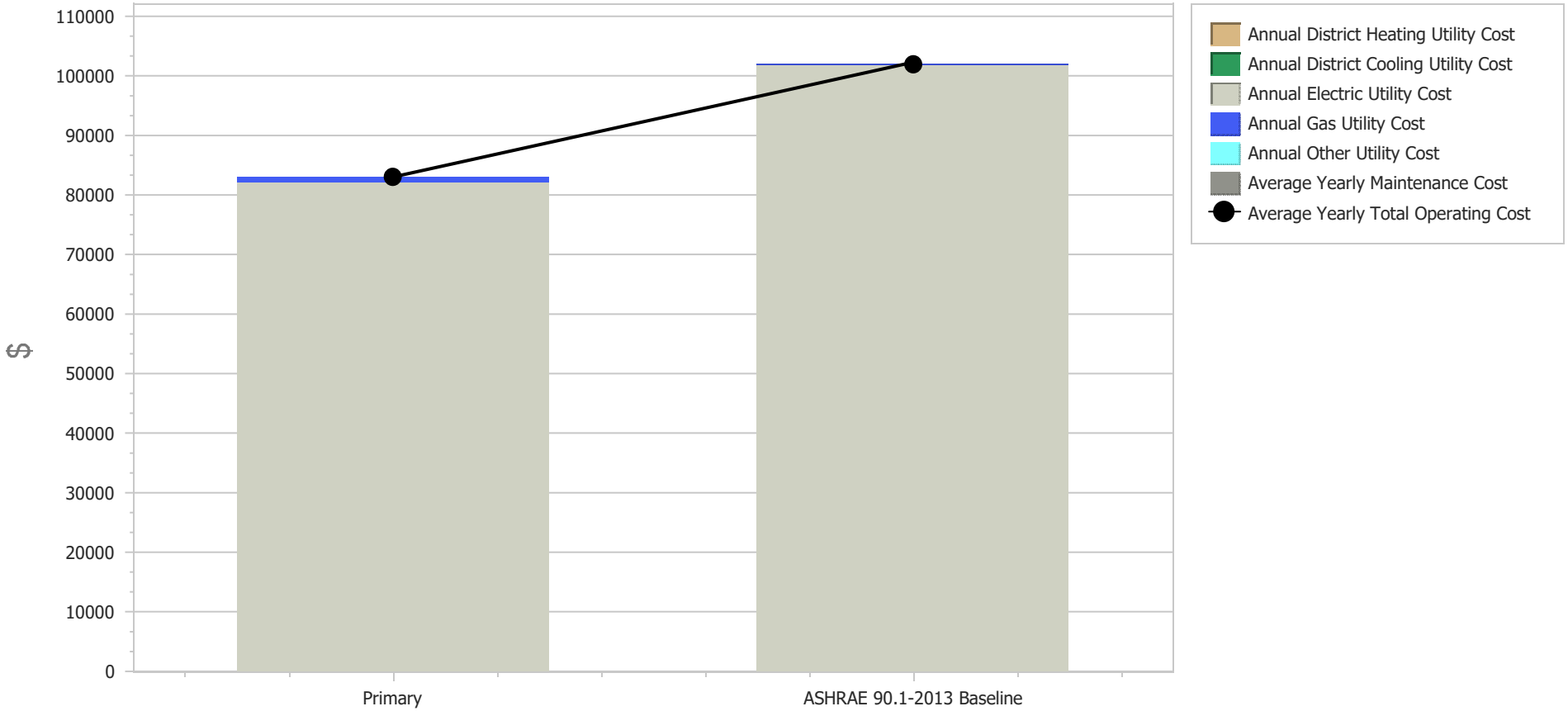

	Primary	ASHRAE 90.1-2013 Baseline
Annual District Cooling Utility Cost	0	0
Annual District Heating Utility Cost	0	0
Annual Electric Utility Cost	82,146	101,776
Annual Gas Utility Cost	866	243
Annual Other Utility Cost	0	0
Average Yearly Maintenance Cost	0	0
Average Yearly Total Operating Cost	83,012	102,019

Economic Summary and Calculation Parameters

Life Cycle and Costing Parameters

Length of Study	25 years
Inflation Approach	ConstantDollar
Discounting Convention	BeginningOfYear
Real Discount Rate	3.00%
Nominal Discount Rate	-- N/A --
Inflation Rate	-- N/A --
Tax Rate	0.00%
Depreciation Method	None
Base Date	July 2019
Service Date	July 2019
Building Area	40,028 ft²
Net Conditioned Building Area	39,748 ft²
Initial Capital Investment Cost	$0

Average Costs

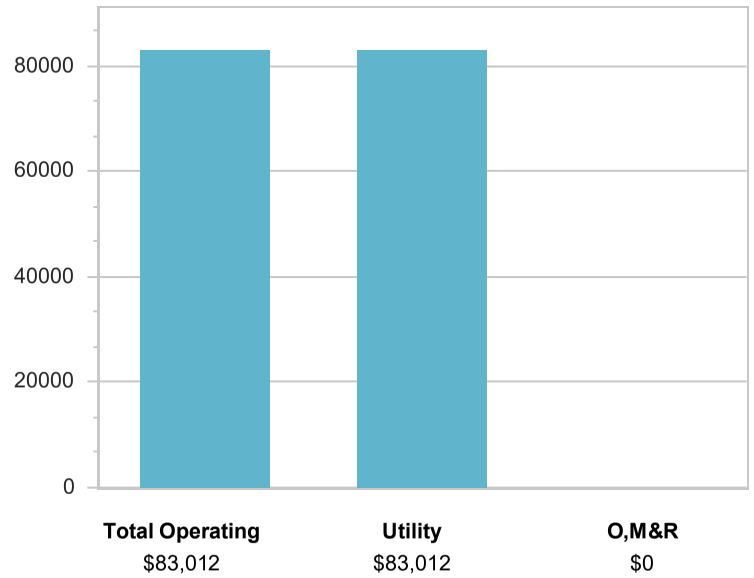

Energy Cost Summary

Name	Electricity	Gas	Other	Total
Energy Cost (Net)	$82,146	$866	$0	$83,012
Renewables Offset	$0	$0	$0	$0
Energy Cost (Total)	$82,146	$866	$0	$83,012
Cost per Building Area	$2.05	$0.02	$0.00	$2.07
Cost per Net Cond. Bldg Area	$2.07	$0.02	$0.00	$2.09

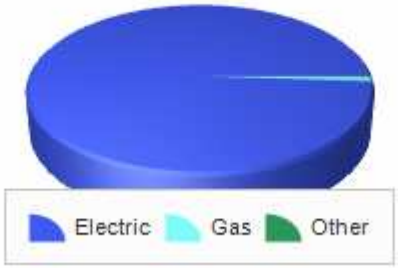

Monthly Utilities Cost Summary

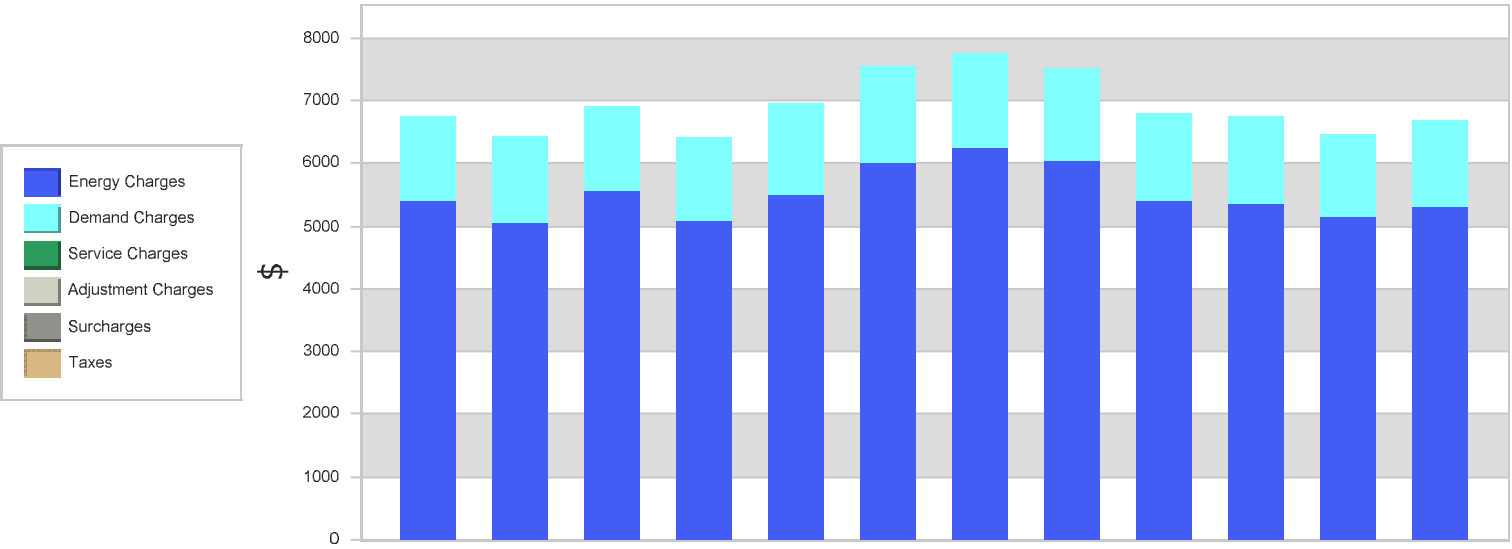

Tariff Catagory	Fuel Type	Jan ($)	Feb ($)	Mar ($)	Apr ($)	May ($)	Jun ($)	Jul ($)	Aug ($)	Sep ($)	Oct ($)	Nov ($)	Dec ($)	Annual Total ($)	% of Total
Consumption Charges	Electricity	5,269	4,672	5,409	5,088	5,505	6,010	6,256	6,041	5,396	5,352	5,067	5,203	65,269	78.63%
	Natural Gas	140	377	153	0	0	0	0	0	0	0	86	110	866	1.04%
Demand Charges	Electricity	1,341	1,377	1,342	1,325	1,454	1,539	1,508	1,477	1,406	1,407	1,320	1,382	16,876	20.33%
ServiceCharges	All	0	0	0	0	0	0	0	0	0	0	0	0	0	0.00%
Basis	All	6,750	6,426	6,904	6,413	6,959	7,549	7,764	7,518	6,802	6,758	6,473	6,695	83,012	100.00%
Adjustment	All	0	0	0	0	0	0	0	0	0	0	0	0	0	0.00%
Surcharge	All	0	0	0	0	0	0	0	0	0	0	0	0	0	0.00%
Subtotal	All	6,750	6,426	6,904	6,413	6,959	7,549	7,764	7,518	6,802	6,758	6,473	6,695	83,012	100.00%
Taxes	All	0	0	0	0	0	0	0	0	0	0	0	0	0	0.00%
	Total	6,750	6,426	6,904	6,413	6,959	7,549	7,764	7,518	6,802	6,758	6,473	6,695	83,012	

Monthly Utility Details

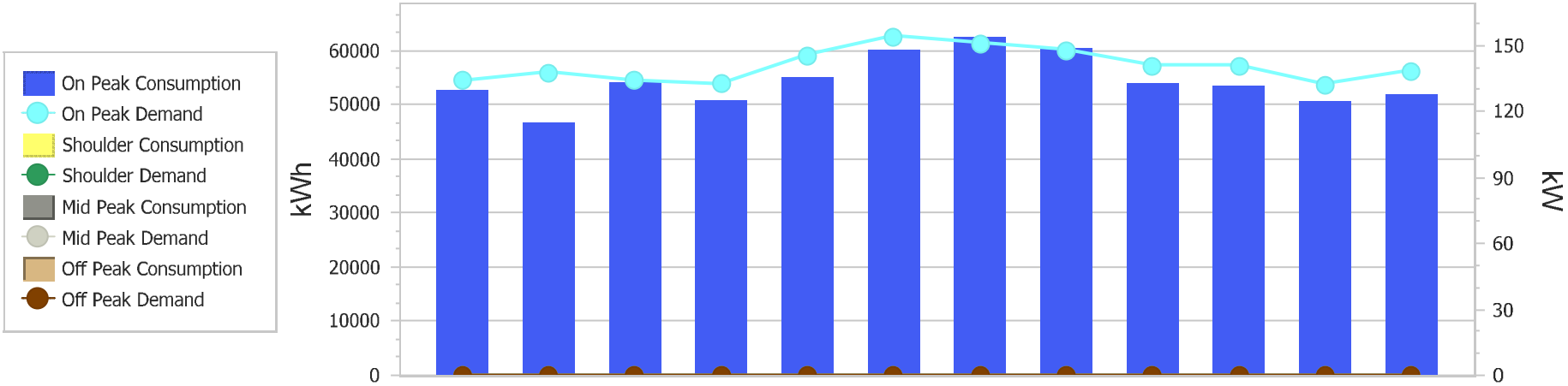

Electricity	Jan	Feb	Mar	Apr	May	Jun	Jul	Aug	Sep	Oct	Nov	Dec	Annual Totals
On Peak Consumption kWh	52,690	46,723	54,092	50,882	55,054	60,097	62,559	60,412	53,965	53,517	50,671	52,032	652,695
On Peak Demand kW	134	138	134	133	145	154	151	148	141	141	132	138	154

Monthly Utility Details

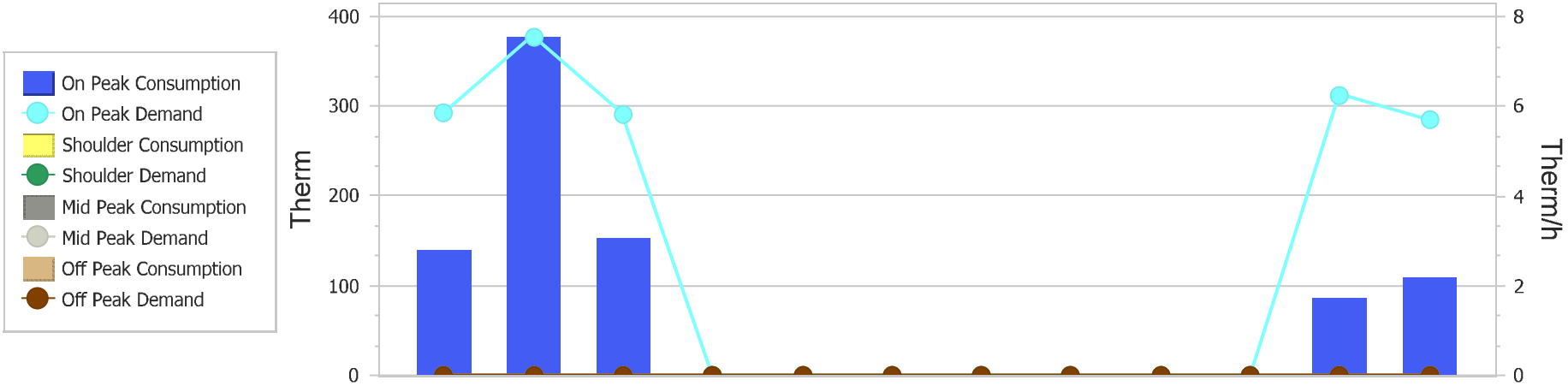

Natural Gas		Jan	Feb	Mar	Apr	May	Jun	Jul	Aug	Sep	Oct	Nov	Dec	Annual Totals
On Peak Consumption	Therm	140	377	153	0	0	0	0	0	0	0	86	110	866
On Peak Demand	Therm/h	6	8	6	0	0	0	0	0	0	0	6	6	8

Tariff Details

Tariff Name	Selected	Qualified	Meter Name	Buy or Sell	Group	Total Annual Cost
SAMPLE WITH ALL UTILITIES_ELEC	Yes	Yes	BUILDING ELECTRICITY	Buy	(none)	$82,146
SAMPLE WITH ALL UTILITIES_NGAS	Yes	Yes	NATURALGAS:FACILITY	Buy	(none)	$866

Life Cycle Operating Cash Flow (without escalation)

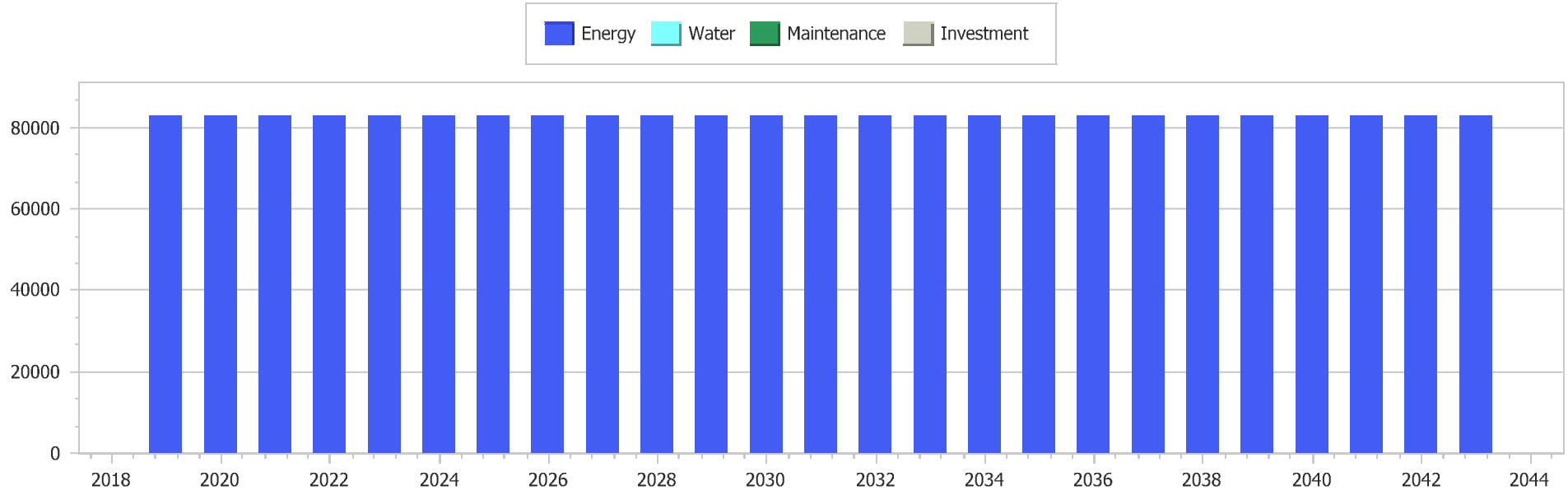

Year	Energy	Water	Maintenance	Investment	Total
2019	83,012	0	0	0	83,012
2020	83,012	0	0	0	83,012
2021	83,012	0	0	0	83,012
2022	83,012	0	0	0	83,012
2023	83,012	0	0	0	83,012
2024	83,012	0	0	0	83,012
2025	83,012	0	0	0	83,012

Year	Energy	Water	Maintenance	Investment	Total
2026	83,012	0	0	0	83,012
2027	83,012	0	0	0	83,012
2028	83,012	0	0	0	83,012
2029	83,012	0	0	0	83,012
2030	83,012	0	0	0	83,012
2031	83,012	0	0	0	83,012
2032	83,012	0	0	0	83,012
2033	83,012	0	0	0	83,012
2034	83,012	0	0	0	83,012
2035	83,012	0	0	0	83,012
2036	83,012	0	0	0	83,012
2037	83,012	0	0	0	83,012
2038	83,012	0	0	0	83,012
2039	83,012	0	0	0	83,012
2040	83,012	0	0	0	83,012
2041	83,012	0	0	0	83,012
2042	83,012	0	0	0	83,012
2043	83,012	0	0	0	83,012

Present Value Analysis (Without Escalation)

Present Value By Year

Year	Total Cost	Present Value
2019	0	83011.77
2020	0	80593.95
2021	0	78246.55
2022	0	75967.53
2023	0	73754.88
2024	0	71606.68
2025	0	69521.05
2026	0	67496.16
2027	0	65530.26
2028	0	63621.61
2029	0	61768.55
2030	0	59969.47
2031	0	58222.78
2032	0	56526.97
2033	0	54880.56
2034	0	53282.09
2035	0	51730.19
2036	0	50223.48
2037	0	48760.66
2038	0	47340.45
2039	0	45961.6
2040	0	44622.92
2041	0	43323.22
2042	0	42061.38
2043	0	40836.29
	Total Life Cycle Cost	1,488,861

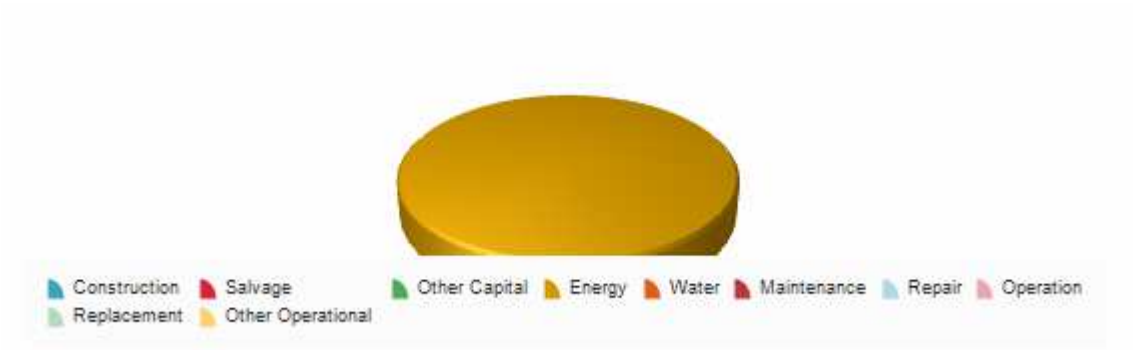

Category	Present Value	
Grand Total	$1,488,861	
Construction	$0	0%
Salvage	$0	0%
Other Capital	$0	0%
Energy	$1,488,861	100%
Water	$0	0%
Maintenance	$0	0%
Repair	$0	0%
Operation	$0	0%
Replacement	$0	0%
Other Operational	$0	0%
Total Energy	$1,488,861	
Total Operation	$1,488,861	
Total Capital	$0	

Economic Summary and Calculation Parameters

Life Cycle and Costing Parameters

Length of Study	25 years
Inflation Approach	ConstantDollar
Discounting Convention	BeginningOfYear
Real Discount Rate	3.00%
Nominal Discount Rate	-- N/A --
Inflation Rate	-- N/A --
Tax Rate	0.00%
Depreciation Method	None
Base Date	July 2019
Service Date	July 2019
Building Area	40,028 ft²
Net Conditioned Building Area	39,748 ft²
Initial Capital Investment Cost	$0

Average Costs

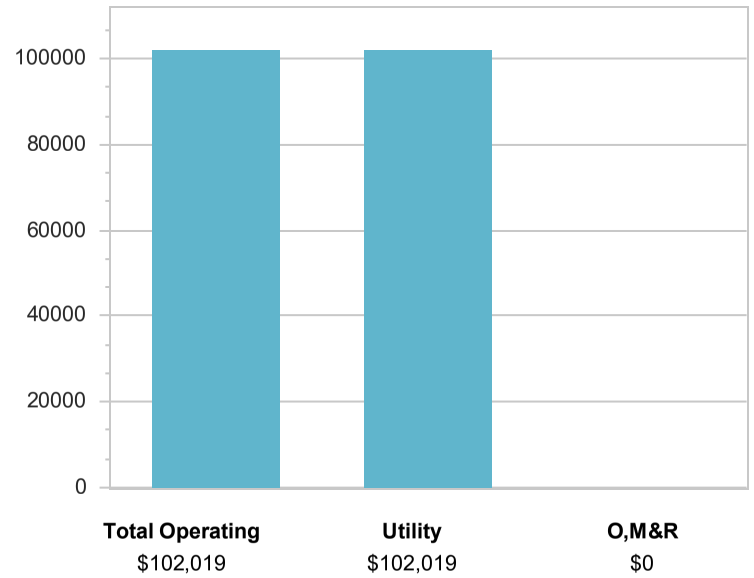

Energy Cost Summary

Name	Electricity	Gas	Other	Total
Energy Cost (Net)	$101,776	$243	$0	$102,019
Renewables Offset	$0	$0	$0	$0
Energy Cost (Total)	$101,776	$243	$0	$102,019
Cost per Building Area	$2.54	$0.01	$0.00	$2.55
Cost per Net Cond. Bldg Area	$2.56	$0.01	$0.00	$2.57

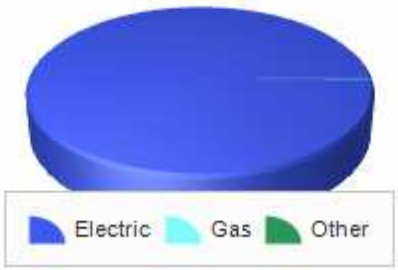

Monthly Utilities Cost Summary

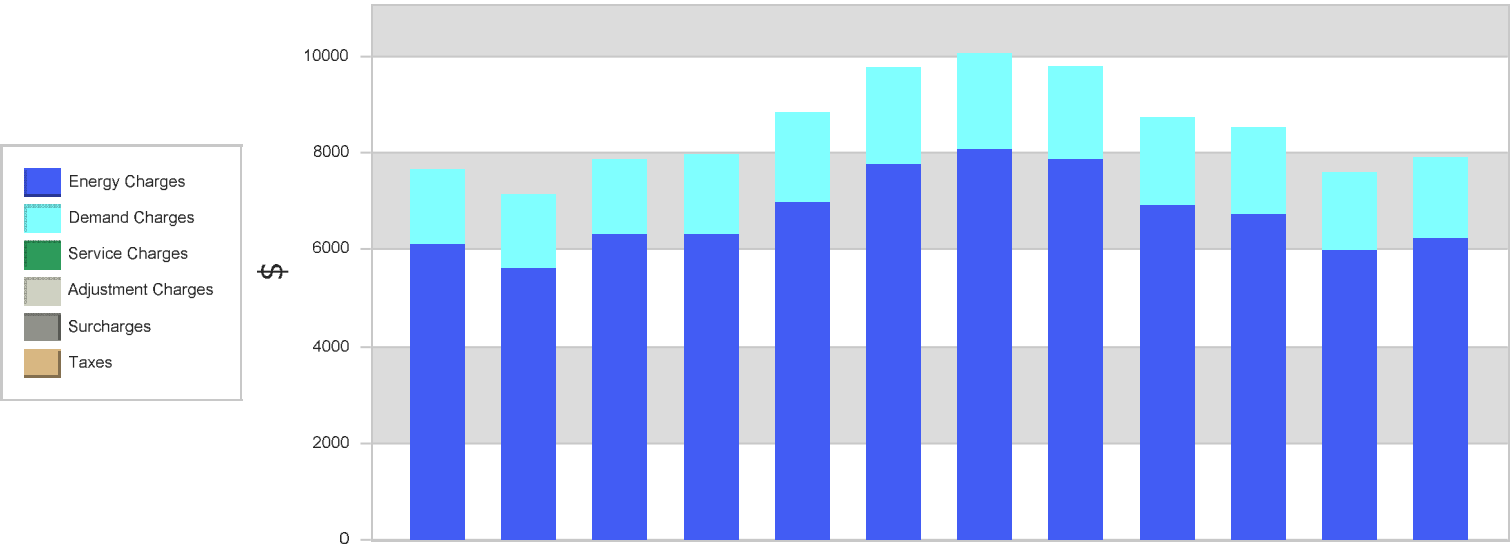

Tariff Catagory	Fuel Type	Jan ($)	Feb ($)	Mar ($)	Apr ($)	May ($)	Jun ($)	Jul ($)	Aug ($)	Sep ($)	Oct ($)	Nov ($)	Dec ($)	Annual Total ($)	% of Total
Consumption Charges	Electricity	6,071	5,550	6,286	6,332	7,011	7,774	8,086	7,876	6,936	6,763	5,962	6,225	80,872	79.27%
	Natural Gas	52	86	37	1	0	0	0	0	0	1	32	35	243	0.24%
Demand Charges	Electricity	1,538	1,531	1,555	1,654	1,844	2,002	1,992	1,924	1,811	1,784	1,608	1,662	20,904	20.49%
ServiceCharges	All	0	0	0	0	0	0	0	0	0	0	0	0	0	0.00%
Basis	All	7,661	7,167	7,877	7,986	8,854	9,776	10,077	9,800	8,747	8,548	7,602	7,922	102,019	100.00%
Adjustment	All	0	0	0	0	0	0	0	0	0	0	0	0	0	0.00%
Surcharge	All	0	0	0	0	0	0	0	0	0	0	0	0	0	0.00%
Subtotal	All	7,661	7,167	7,877	7,986	8,854	9,776	10,077	9,800	8,747	8,548	7,602	7,922	102,019	100.00%
Taxes	All	0	0	0	0	0	0	0	0	0	0	0	0	0	0.00%
	Total	7,661	7,167	7,877	7,986	8,854	9,776	10,077	9,800	8,747	8,548	7,602	7,922	102,019	

Monthly Utility Details

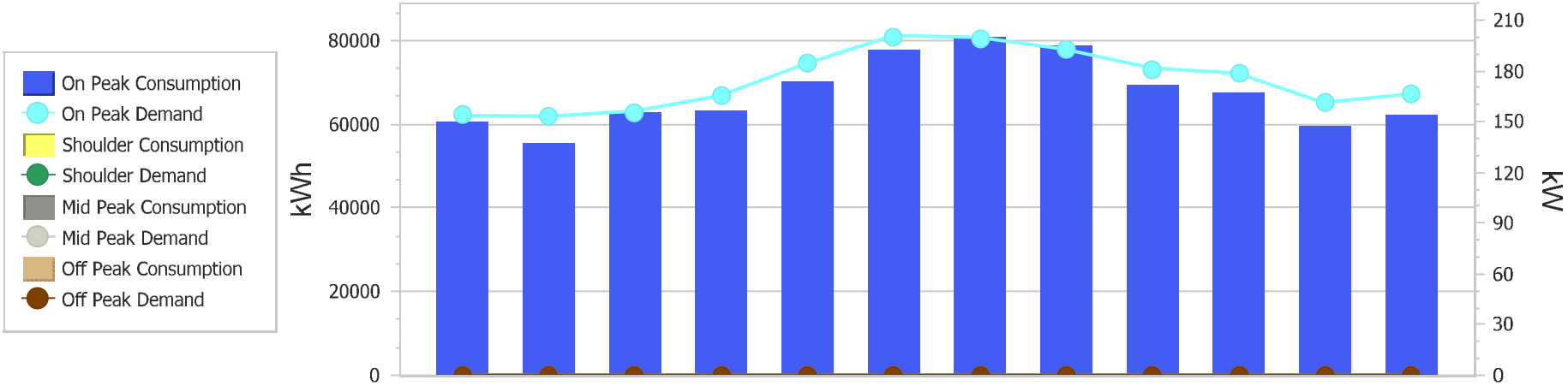

Electricity	Jan	Feb	Mar	Apr	May	Jun	Jul	Aug	Sep	Oct	Nov	Dec	Annual Totals
On Peak Consumption kWh	60,712	55,501	62,855	63,320	70,106	77,744	80,855	78,761	69,361	67,630	59,621	62,255	808,720
On Peak Demand kW	154	153	155	165	184	200	199	192	181	178	161	166	200

Monthly Utility Details

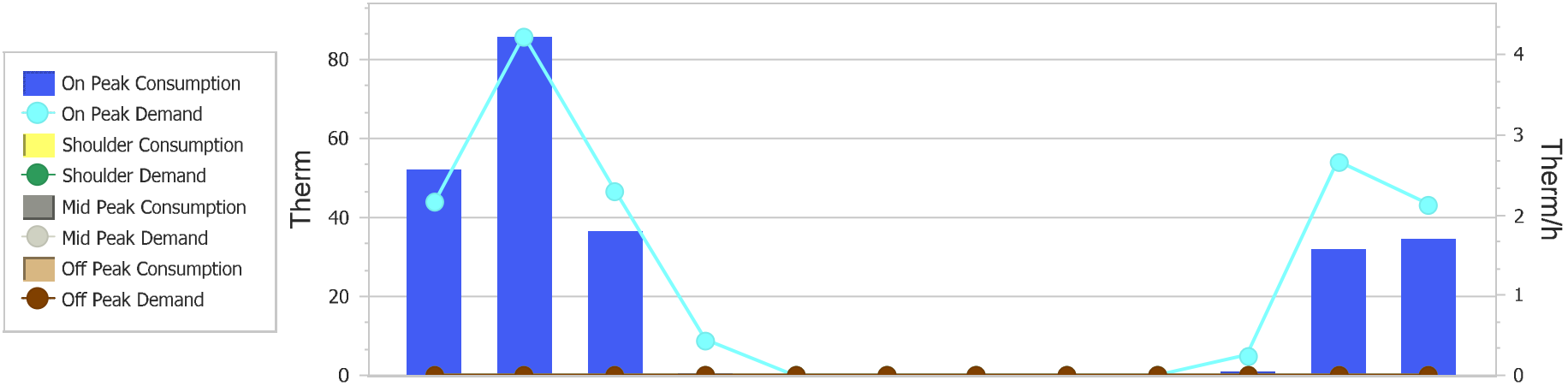

Natural Gas		Jan	Feb	Mar	Apr	May	Jun	Jul	Aug	Sep	Oct	Nov	Dec	Annual Totals
On Peak Consumption	Therm	52	86	37	1	0	0	0	0	0	1	32	35	243
On Peak Demand	Therm/h	2	4	2	0	0	0	0	0	0	0	3	2	4

Tariff Details

Tariff Name	Selected	Qualified	Meter Name	Buy or Sell	Group	Total Annual Cost
SAMPLE WITH ALL UTILITIES_ELEC	Yes	Yes	BUILDING ELECTRICITY	Buy	(none)	$101,776
SAMPLE WITH ALL UTILITIES_NGAS	Yes	Yes	NATURALGAS:FACILITY	Buy	(none)	$243

Life Cycle Operating Cash Flow (without escalation)

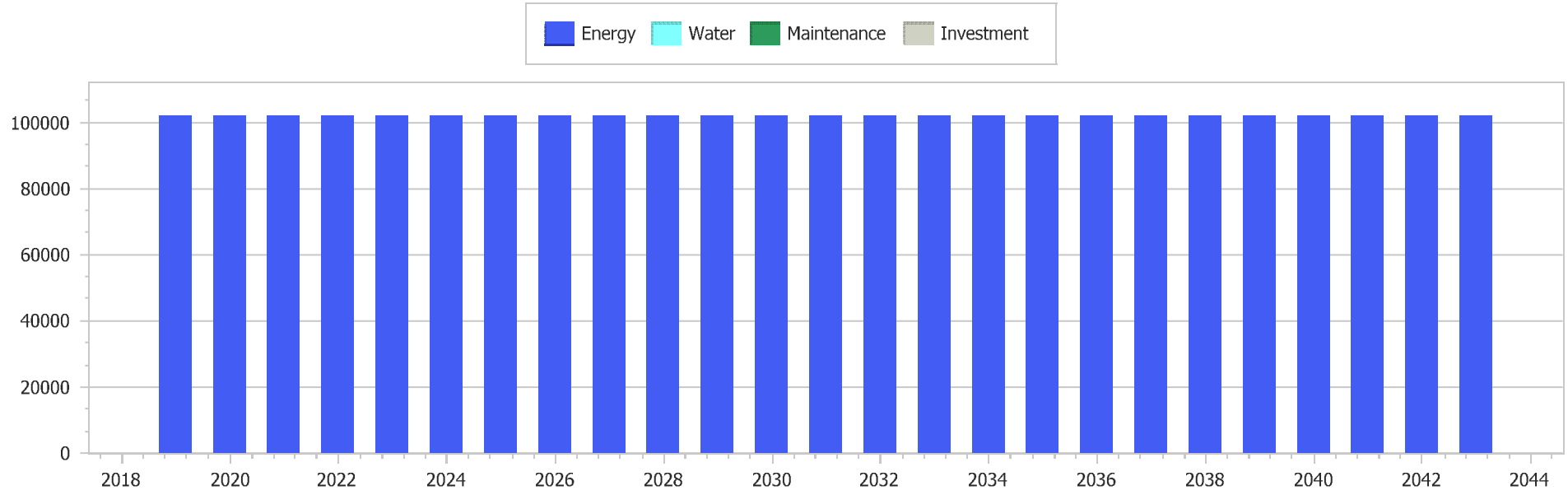

Year	Energy	Water	Maintenance	Investment	Total
2019	102,019	0	0	0	102,019
2020	102,019	0	0	0	102,019
2021	102,019	0	0	0	102,019
2022	102,019	0	0	0	102,019
2023	102,019	0	0	0	102,019
2024	102,019	0	0	0	102,019
2025	102,019	0	0	0	102,019

Year	Energy	Water	Maintenance	Investment	Total
2026	102,019	0	0	0	102,019
2027	102,019	0	0	0	102,019
2028	102,019	0	0	0	102,019
2029	102,019	0	0	0	102,019
2030	102,019	0	0	0	102,019
2031	102,019	0	0	0	102,019
2032	102,019	0	0	0	102,019
2033	102,019	0	0	0	102,019
2034	102,019	0	0	0	102,019
2035	102,019	0	0	0	102,019
2036	102,019	0	0	0	102,019
2037	102,019	0	0	0	102,019
2038	102,019	0	0	0	102,019
2039	102,019	0	0	0	102,019
2040	102,019	0	0	0	102,019
2041	102,019	0	0	0	102,019
2042	102,019	0	0	0	102,019
2043	102,019	0	0	0	102,019

Present Value Analysis (Without Escalation)

Present Value By Year

Year	Total Cost	Present Value
2019	0	102018.5
2020	0	99047.13
2021	0	96162.26
2022	0	93361.42
2023	0	90642.16
2024	0	88002.09
2025	0	85438.93
2026	0	82950.41
2027	0	80534.38
2028	0	78188.72
2029	0	75911.38
2030	0	73700.37
2031	0	71553.75
2032	0	69469.66
2033	0	67446.28
2034	0	65481.82
2035	0	63574.58
2036	0	61722.9
2037	0	59925.14
2038	0	58179.75
2039	0	56485.19
2040	0	54839.99
2041	0	53242.71
2042	0	51691.95
2043	0	50186.36
	Total Life Cycle Cost	1,829,758

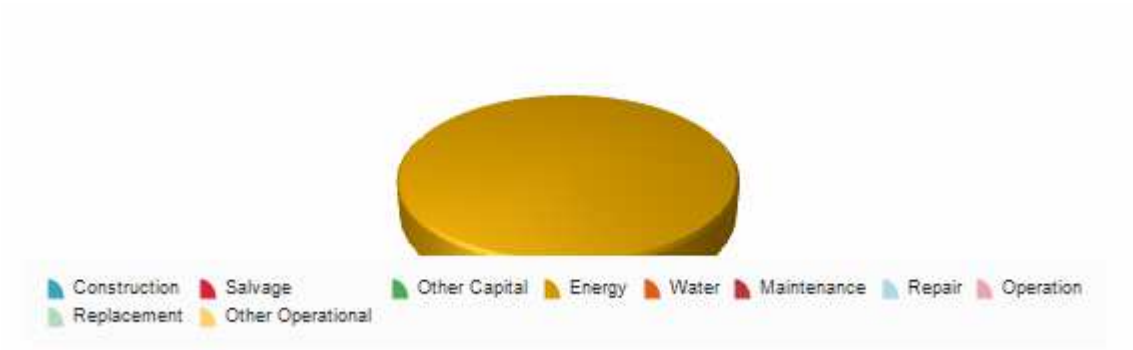

Category	Present Value	
Grand Total	$1,829,758	
Construction	$0	0%
Salvage	$0	0%
Other Capital	$0	0%
Energy	$1,829,758	100%
Water	$0	0%
Maintenance	$0	0%
Repair	$0	0%
Operation	$0	0%
Replacement	$0	0%
Other Operational	$0	0%
Total Energy	$1,829,758	
Total Operation	$1,829,758	
Total Capital	$0	

RTU-01

Unit Rating

2425 South Yukon Ave - Tulsa, Oklahoma 74107-2728 - Ph. (918) 583-2266 Fax (918) 583-6094
AAONEcat32 Ver. 4.317 (SN: 5593632-RL5UQX09)

1A 1B 1C 1D 2 3 4 5A 5B 5C 6A 6B 6C 7 8 9 10 11 12 13 14A 14B 15 16 17 18 19 20 21 22 23

RN-030-3-A-EB19-34B:BEDF-D0K-DQH-AHC-EJQA5B3-00-00A0000VB

Tag: RTU-1 RN30

Job Information

Job Name:	*WCC SD Jacobs*
Job Number:	*WCC SD Jacobs*
Site Altitude:	*0 ft*
Refrigerant	*R-410A*

Unit Information

Approx. Op./Ship Weights:	*3123 / 3123 lbs. (±5%)*
Supply CFM/ESP:	*7400 / 2.5 in. wg.*
Pre-Filter FV / Qty:	*355.20 fpm / 6*
Final Filter FV / Qty:	*355.20 fpm / 6*
Exhaust CFM/ESP/TSP:	*6200 / 0.50 / 0.97 in. wg.*
Outside CFM:	*1200*
Ambient Temperature:	*90.7 ºF DB / 73.8 ºF WB*
Return Temperature:	*75 ºF DB / 62 ºF WB*

Static Pressure

External:	*2.50 in. wg.*	Economizer:	*0.14 in. wg.*
Evaporator:	*0.49 in. wg.*	Heating:	*0.27 in. wg.*
Filters Clean:	*0.49 in. wg.*	Cabinet:	*0.08 in. wg.*
Dirt Allowance	*0.5 in. wg.*	Re-Heat Coil:	*0.07 in. wg.*
		Total:	*4.54 in. wg.*

Cooling Section

	Gross	Net
Total Capacity:	*324.38*	*302.07 MBH*
Sensible Capacity:	*230.63*	*208.32 MBH*
Latent Capacity:	*93.75 MBH*	
Mixed Air Temp:	*77.55 ºF DB*	*64.13 ºF WB*
Entering Air Temp:	*77.55 ºF DB*	*64.13 ºF WB*
Lv Air Temp (Coil):	*48.22 ºF DB*	*48.02 ºF WB*
Lv Air Temp (Unit)	*50.97 ºF DB*	*49.27 ºF WB*
Digital Comp. Capacity Ratio:	*100%*	
Supply Air Fan:	*1 x 270D60 @ 8.04 BHP*	
SA Fan RPM / Width:	*1649 / 3.680"*	
Exhaust Air Fan:	*1 x RM220A @ 3.00 BHP*	
EA Fan RPM / Width:	*1341 / 4.930"*	
Evaporator Coil:	*19.9 ft² / 6 Rows / 12 FPI*	
Evaporator Face Velocity:	*372.6 fpm*	

Heating Section

PreHeat Type:	*Std (No Preheat)*
Heating Type:	*Nat. Gas Heat*
Heating CFM:	*7400*
Total Capacity:	*218.7 MBH*
OA Temp:	*16.4 ºF DB / 13.2 ºF WB*
RA Temp:	*75.0 ºF DB / 62.0 ºF WB*
Entering Air Temp:	*65.5 ºF DB / 56.4 ºF WB*
Leaving Air Temp:	*92.9 ºF DB / 66.1 ºF WB*
Input:	*270.0 MBH*
Heater Qty:	*1*
Consumption:	*270.0 MBH*
Total Turndown Ratio:	*9:1*

Re-Heat Coil:

Capacity:	*174 MBH*
LA DB / WB:	*70.00 ºF / 57.17 ºF*
RH:	*45%*

Rating Information

Cooling Capacity (MBH):	*322.0*
Cooling EER:	*11*
Cooling IEER:	*12*

Rated in accordance with AHRI 340/360

Application EER @ Op. Conditions: *9.3*

Electrical Data

Rating:	*460/3/60*	Minimum Circuit Amp:	*79*
Unit FLA:	*73*	Maximum Overcurrent:	*100*
SCCR:	*5 KAIC*		

	Qty	HP	VAC	Phase	RPM	FLA	RLA
Compressor 1:	1		460	3			23.1
Compressor 2:	1		460	3			23.1
Condenser Fans:	3	0.75	460	3	1080	1.8	
Supply Fan:	1	10.00	460	3	1760	14.0	
Exhaust Fan:	1	5.00	460	3	1760	7.6	
Combustion:	1	0.25	460	1	3210	0.9	

Cabinet Sound Power Levels*

Octave Bands:	**63**	**125**	**250**	**500**	**1000**	**2000**	**4000**	**8000**
Discharge LW(dB):	96	94	95	95	92	90	92	88
Return LW(dB):	90	88	85	78	77	76	70	62

**Sound power levels are given for informational purposes only. The sound levels are not guaranteed.*

RTU-01

27.0" STAR Plenum

2425 South Yukon Ave - Tulsa, Oklahoma 74107-2728 - Ph. (918) 583-2266 Fax (918) 583-6094
AAONEcat32 Ver. 4.317 (SN: 5593632-RL5UQX09)

JOB INFORMATION:

Job Name:	*WCC SD Jacobs*
Job Tag:	*RTU-1 RN30*
Rep Firm:	
Date:	*12/20/2021*

WHEEL SPECIFICATION:

Max RPM:	*1,800*
Diameter x Qty:	*27.4 in. x 1*
Width%:	*100*
Tip Speed:	*11,829 FPM*
Inertia:	*16 WR²*

OPERATING CONDITIONS:

Air Flow:	*7,400 CFM*
Static Pressure:	*4.54 in. Wg.*
Plenum DP:	*0.00 in. Wg.*
Inlet Grill DP:	*0.00 in. Wg.*
TSP:	*4.54 in. Wg.*
Site Altitude:	*0.00 Ft*
TSP @ Sea Level:	*4.54 in. Wg.*

MOTOR SELECTION:

Rated HP / Bypass:	*10 / No*
Frame Size:	*215T*
Nominal RPM:	*1760*
VAC/PH/HZ:	*460/3/60*
Efficiency	*Premium / 0.917*
Enclosure Type:	*ODP*
Max Inertial Load:	*82 WR²*

FAN PERFORMANCE:

RPM:	*1649*
BHP:	*8.04*
Efficiency:	*65.9%*
In/Out Velocity:	*1932/2022 FPM*
Plenum Out Velocity:	*123 FPM*

FAN SOUND POWER (Inlet/Outlet):

Octave Band: **(Re 10^-12 watts)**

1	2	3	4	5	6	7	8
94	*92*	*89*	*88*	*88*	*88*	*88*	*87*
96	*94*	*95*	*97*	*95*	*94*	*96*	*92*

SOUND POWER A-Weighted: 97 / 102 dB

Max Duct SP with Blocked Airway: **6.3 in. Wg. @ 1649 rpm**

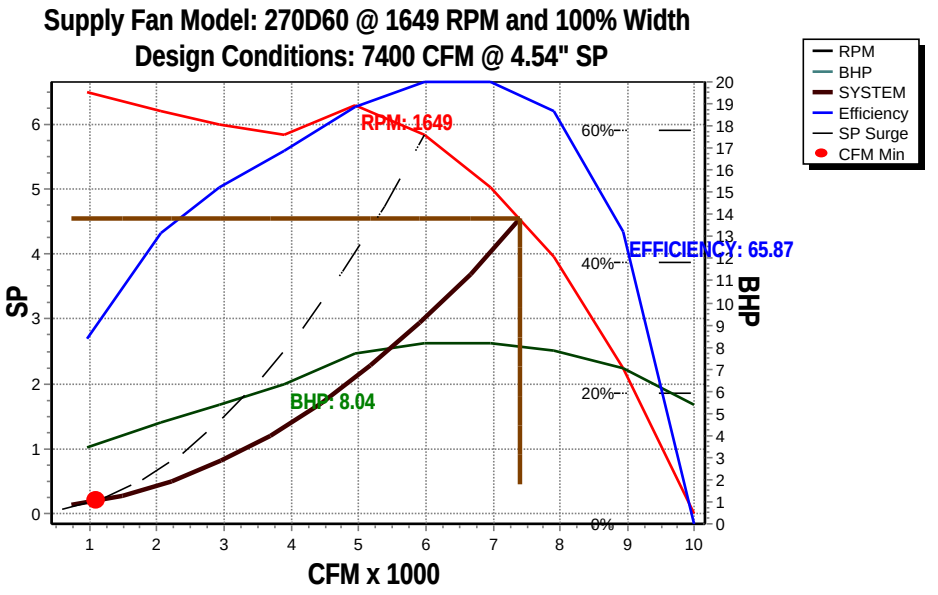

RTU-01

22.0" STAR Plenum

2425 South Yukon Ave - Tulsa, Oklahoma 74107-2728 - Ph. (918) 583-2266 Fax (918) 583-6094
AAONEcat32 Ver. 4.317 (SN: 5593632-RL5UQX09)

JOB INFORMATION:

Job Name:	*WCC SD Jacobs*
Job Tag:	*RTU-1 RN30*
Rep Firm:	
Date:	*12/20/2021*

WHEEL SPECIFICATION:

Max RPM:	*2,200*
Diameter x Qty:	*22.0 in. x 1*
CFM:	*6200*
Tip Speed:	*7,724 FPM*
Inertia:	*5 WR²*

OPERATING CONDITIONS:

Air Flow:	*6,200 CFM*
Static Pressure:	*0.50 in. Wg.*
Relief Dampers DP:	*0.47 in. Wg.*
TSP:	*0.97 in. Wg.*
Site Altitude:	*0.00 Ft*
TSP @ Sea Level:	*0.97 in. Wg.*

MOTOR SELECTION:

Rated HP / Bypass:	*5 / No*
Frame Size:	*184T*
Nominal RPM:	*1760*
VAC/PH/HZ:	*460/3/60*
Efficiency	*Premium / 0.895*
Enclosure Type:	*ODP*
Max Inertial Load:	*52 WR²*

FAN PERFORMANCE:

RPM:	*1341*
BHP:	*3.00*
Efficiency:	*31.6%*
In/Out Velocity:	*1896/2088 FPM*
Plenum Out Velocity:	*103 FPM*

FAN SOUND POWER (Inlet/Outlet):

Octave Band: **(Re 10^-12 watts)**

1	2	3	4	5	6	7	8
89	*88*	*89*	*84*	*78*	*77*	*72*	*64*
89	*88*	*89*	*84*	*78*	*77*	*72*	*64*

SOUND POWER A-Weighted: 90 / 90 dB

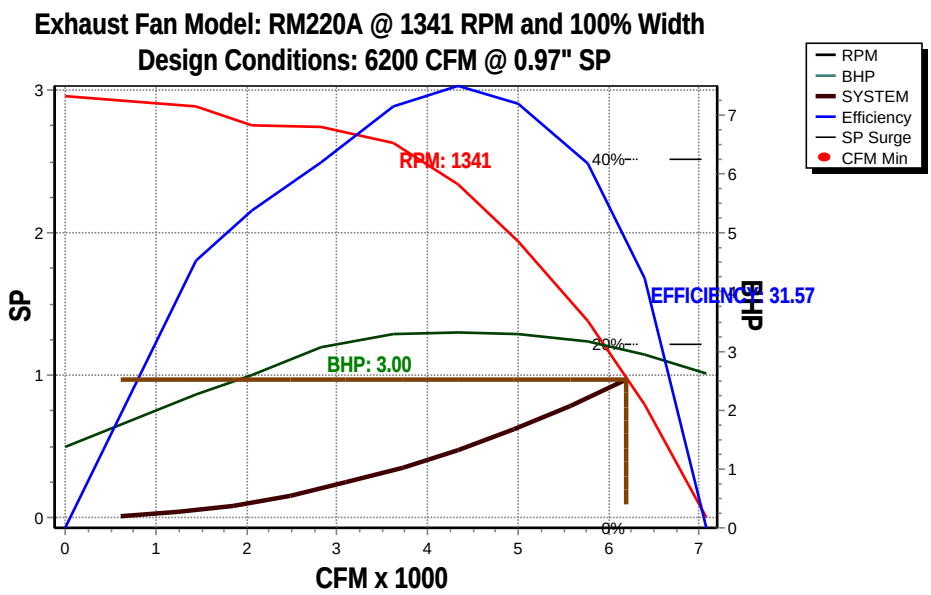

RTU-01

Unit Submittal

2425 South Yukon Ave - Tulsa, Oklahoma 74107-2728 - Ph. (918) 583-2266 Fax (918) 583-6094
AAONEcat32 Ver. 4.317 (SN: 5593632-RL5UQX09)

1A 1B 1C 1D 2 3 4 5A 5B 5C 6A 6B 6C 7 8 9 10 11 12 13 14A 14B 15 16 17 18 19 20 21 22 23

RN-030-3-A-EB19-34B:BEDF-D0K-DQH-AHC-EJQA5B3-00-00A0000VB

Tag: RTU-1 RN30

Job Name: *WCC SD Jacobs* **Unit Submittal For:**
Job Number: *WCC SD Jacobs* **Unit Submittal Date:** *December 20, 2021*

	Base Option	Description
R	Series	Roof Top Unit
N	Generation	Ninth Generation
030	Unit Size	Thirty
3	Voltage	460V/3Ø/60Hz
A	Interior Protection	Interior Corrosion Protection
E	Refrigerant Style	R-410A Variable Capacity Scroll Compressor (VCC)
B	Unit Configuration	Air-Cooled Cond. + 6 Row Evap. Coil
1	Coil Coating	Polymer E-Coated Evap. and Cond. Coils
9	Cooling/Heat Pump Staging	Modulating - 1 VCC + 1 On/Off Comp.
3	Heating Type	Natural Gas Stainless Steel
4	Heating Designation	Heat 4 - 270 MBtuh
B	Heating Staging	High Turndown Modulating Gas - Temperature Control

	Feature Option	Description
B	**1A.** RA/OA Section	Economizer + Power Exhaust
E	**1B.** RA/EA Blower Configuration	1 Blower + Premium Efficiency Motor + 1 VFD
D	**1C.** RA/EA Blower	22" Backward Curved Plenum
F	**1D.** RA/EA Blower Motor	5.0 hp - 1760 rpm
D	**2.** OA Control	Fully Modulating Actuator - Enthalpy Limit
0	**3.** Heat Options	Standard
K	**4.** Maintenance Options	115V Convenience Outlet - Factory Wired + Blower Aux. Contact - LVTB + Remote Start/Stop Terminals - LVTB
D	**5A.** SA Blower Configuration	1 Blower + Premium Efficiency Motor + 1 VFD
Q	**5B.** SA Blower	27" Direct Drive Backward Curved Plenum - 60% Width
H	**5C.** SA Motor	10 hp - 1760 rpm
A	**6A.** Pre Filter Type	2" Pleated Pre Filter - 30% Eff
H	**6B.** Unit Filter Type	4" Pleated - 95% Eff - MERV 14
C	**6C.** Filter Options	Clogged Filter Switch + Magnehelic Gauge
E	**7.** Refrigeration Control	Freeze Stat
J	**8.** Refrigeration Options	HGB Lead + HGB Lag + MHGR
Q	**9.** Refrigeration Accessories	VFD Condenser Fan - Head Pressure Control + Sight Glass + Compressor Isolation Valves
A	**10.** Power Options	Non-fused Disconnect Power Switch - 100 Amps
5	**11.** Safety Options	RA and SA Smoke Detector + Remote Safety Shutdown Terminals + High Condensate Level Switch
B	**12.** Controls	Phase & Brown Out Protection
3	**13.** Special Controls	VAV Single Zone Unit Controller - VAV Cool + VAV Heat
0	**14A.** Outside Air Configuration	Standard - None
0	**14B.** Preheat Sizing	Standard - None
0	**15.** Glycol Percent	Water or No WSHP
0	**16.** Interior Cabinet Options	Standard - Double Wall + R-13 Foam Insulation + Stainless Steel Drain Pan
A	**17.** Exterior Cabinet Options	Base Insulation
0	**18.** Electrical Rating	Standard - 5 KAIC
0	**19.** Code Options	Standard - ETL U.S.A. Listing
0	**20.** Crating	Standard
0	**21.** Water-Cooled Cond.	Standard - None
V	**22.** Control Vendors	VCC-X Controls + Integrated BACnet MSTP
B	**23.** Type	Standard - Includes AAON Gray Paint

RTU-01

VCCX Components

2425 South Yukon Ave - Tulsa, Oklahoma 74107-2728 - Ph. (918) 583-2266 Fax (918) 583-6094
AAONEcat32 Ver. 4.317 (SN: 5593632-RL5UQX09)

1A 1B 1C 1D 2 3 4 5A 5B 5C 6A 6B 6C 7 8 9 10 11 12 13 14A 14B 15 16 17 18 19 20 21 22 23

RN-030-3-A-EB19-34B:BEDF-D0K-DQH-AHC-EJQA5B3-00-00A0000VB

Tag: RTU-1 RN30

Job Name: ***WCC SD Jacobs*** **VCCX For:**

Job Number: ***WCC SD Jacobs*** **VCCX Date:** ***December 20, 2021***

Hardware Included For VCCX Controller

Part #	Included Parts	Assigned Channel	BACnet Point
ASM01698	VCCX2 CONTROLLER		
ASM01692	OSA Temp/Hum Sensor	EBUS2 communicating sensor	AI:16,AI:17,AI:18,AI:19
ASM01820	Space Digital Temp/Hum Sensor	EBUS3 communicating sensor	AI:12,AI:13
R82890	Supply Temp Sensor - Field Installed	VCCX control point AI 3	AI:9
R37030	Building Pressure Sensor	VCCX control point AI 5	AI:23
	Supply Fan Control Signal 0-10VDC	VCCX control point AO 1	AI:22
	Economizer	VCCX control point AO 2	AI:30
	Building Pressure Control Signal	VCCX control point AO 4	AI:24
R62330	Proof of Air Flow	VCCX control point BI 1	BI:6, BI:24
R64580	Dirty Filter Sensor	VCCX control point BI 2	BI:25
	Safety Shut Down	VCCX control point BI 8	BI:26
	Supply Fan	Configured Relay Point	BI:47
	Exhaust Fan	Configured Relay Point	BI:48
ASM02201	DIGITAL REFRIGERATION MODULE		
R42680	Comp Discharge Temp A	RSMD point TEMP1	AI:66
V38391	Suction Pressure Sensor A	RSMD point SP-1	AI:48
V38410	Discharge Pressure Sensor A	RSMD point HP-1	AI:50
V38410	Discharge Pressure Sensor B	RSMD point HP-2	AI:75
	Modulated Condenser Signal AB	RSMD point AO1	AI:46
	Comp Status Input A	RSMD point BIN1	BI:77
	Comp Status Input B	RSMD point BIN2	BI:78
	Emergency Shutdown	RSMD point BIN4	BI:83
	Comp Unload Signal A	RSMD point T1	AI:44
	Comp Enable A	RSMD Fixed Relay point	BI:84
	Comp Enable B	RSMD Fixed Relay point	BI:85
ASM01670	MODULATING HOT GAS REHEAT MODULE		
	Reheat HGR Valve	MHGRV-X	AI:42
ASM01695	MODULATING GAS MODULE		
	Gas Valve Signal 1B	MODGAS-XWR Gas Valve 2	
	Gas Valve Signal 1A	MODGAS-XWR Gas Valve 1	
	Proof of Ignition 1B	MODGAS-XWR BI4	
	Proof of Ignition 1A	MODGAS-XWR BI3	
	Mod Heat Stage 2 (IGN 1B)	MODGAS-XWR Heat 2 Relay	
	Mod Heat Stage 1 (IGN 1A)	MODGAS-XWR Heat 1 Relay	
	Low Speed Enable	MODGAS-XWR Low Speed Relay	

RTU-01

RN SERIES
C - CABINET WITH ECONOMIZER ~ 16-30 TON AND POWER EXHAUST

CLEARANCES

LOCATION	• UNIT SIZE • 16 - 30 TON
OUTSIDE AIR (BACK)	48
CONTROLS SIDE (FRONT)	48
LEFT SIDE	6
RIGHT SIDE	60
TOP	UNOBSTRUCTED

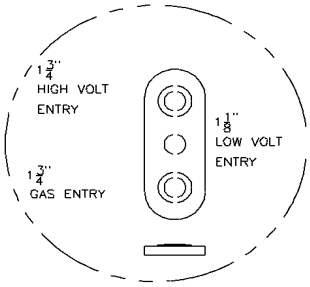

DETAIL A

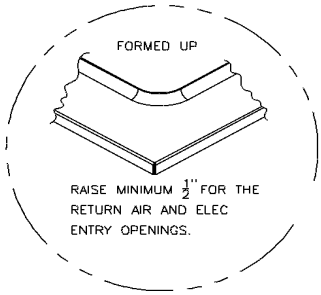

DETAIL B

NUMBER OF CONDENSER FANS

16,18 & 20 TON - 2 FANS

25 & 30 TON - 3 FANS

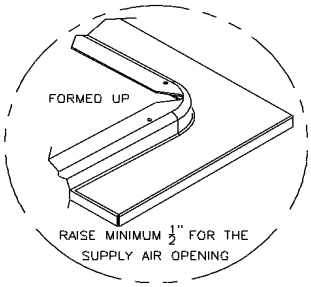

DETAIL C

TOP VIEW

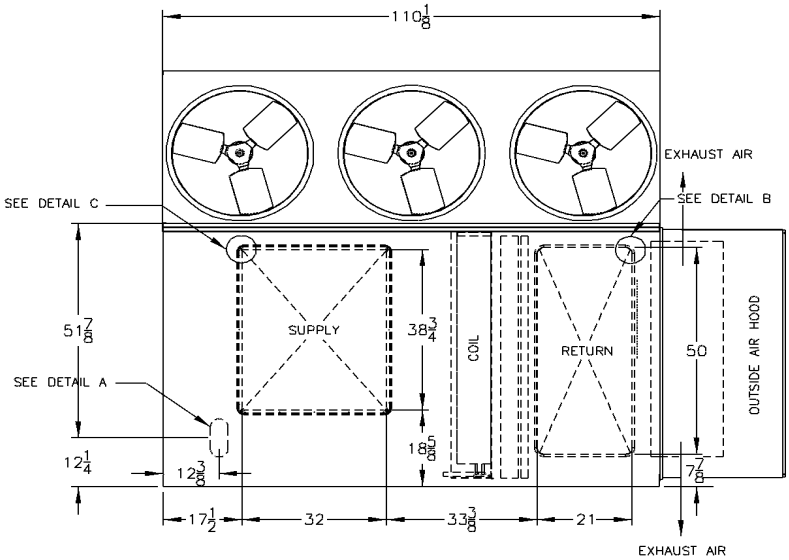

FRONT VIEW

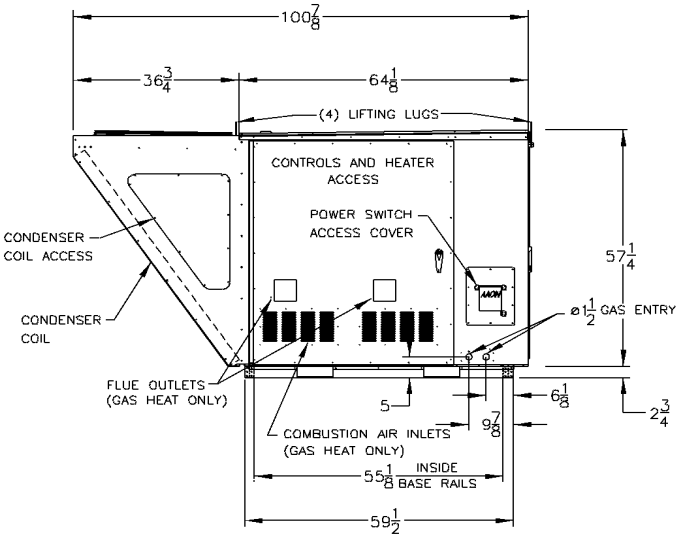

RIGHT SIDE VIEW

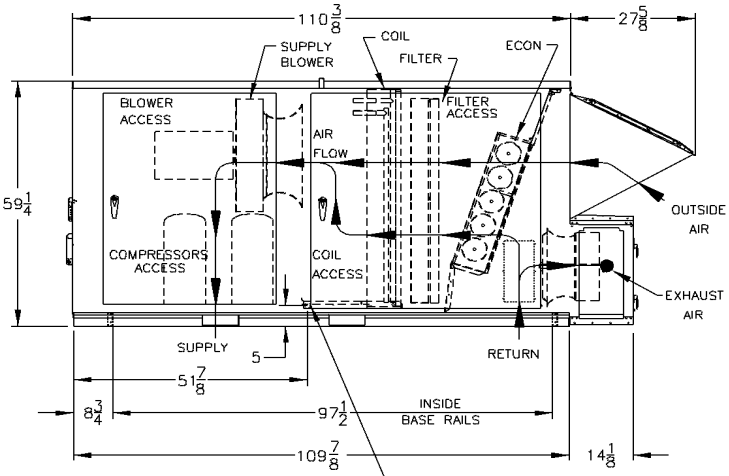

1" MPT STAINLESS CONDENSATE CONNECTION. 'P' TRAP FURNISHED BY MANUFACTURER FOR DRAIN CONNECTION.

RNC-00003 REV:B 08/23/10 JWC

NOTE: ALL DIMENSIONS ARE IN INCHES

RTU-01

RNC CABINET
AIR COOLED CONDENSING UNIT
WITH POWER EXHAUST

AAON®

RN-030-3-A-EB19-34B:BEDF-D0K-DQH-AHC-EJQA5B3-00-00A0000VB

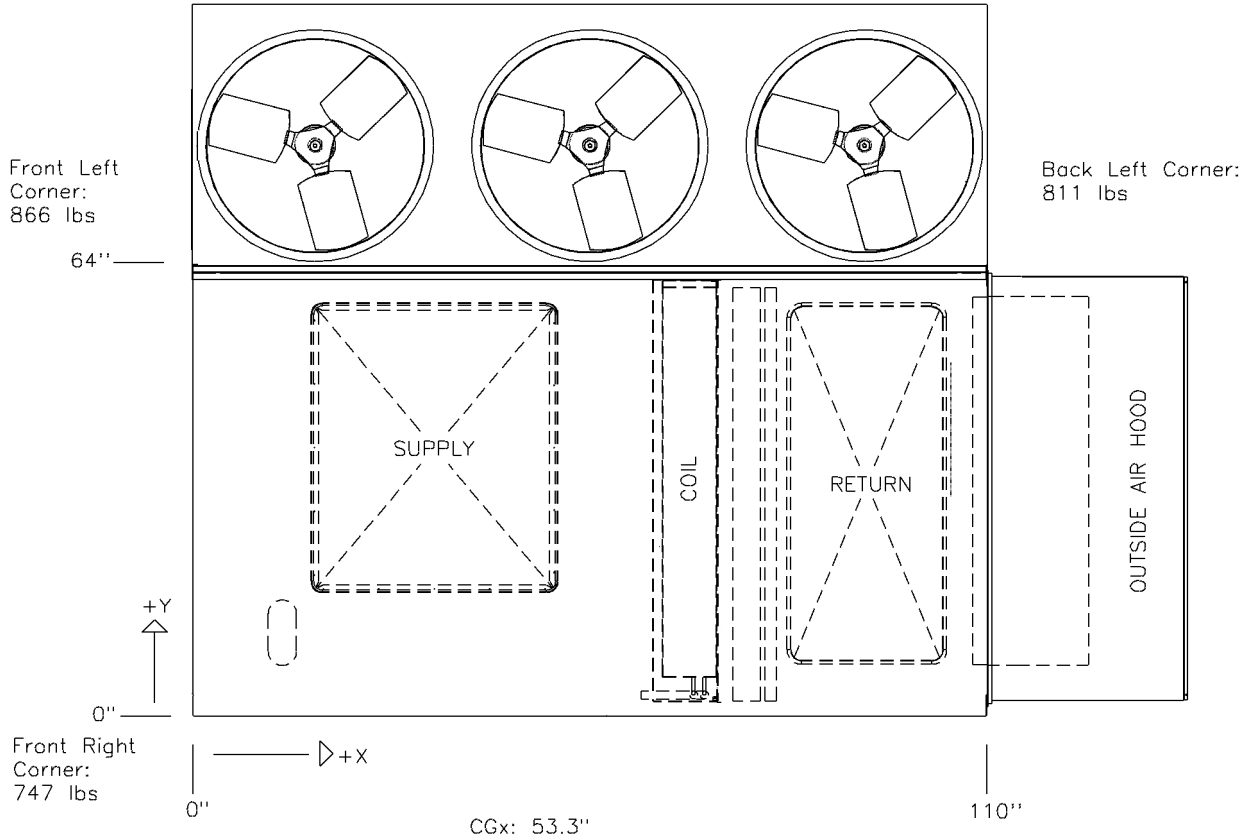

Total Weight:
3123 lbs (±5%)

Disclaimer:
This weight estimate does not account for any SPAs.

RTU-02

Unit Rating

2425 South Yukon Ave - Tulsa, Oklahoma 74107-2728 - Ph. (918) 583-2266 Fax (918) 583-6094
AAONEcat32 Ver. 4.317 (SN: 5593632-RL5UQX09)

1A 1B 1C 1D 2 3 4 5A 5B 5C 6A 6B 6C 7 8 9 10 11 12 13 14A 14B 15 16 17 18 19 20 21 22 23

RN-030-3-A-EB19-34B:BEDD-D0K-DQG-AHC-EJQA5B3-00-00A0000VB

Tag: RTU-2 RN30

Job Information

Job Name:	*WCC SD Jacobs*
Job Number:	*WCC SD Jacobs*
Site Altitude:	*0 ft*
Refrigerant	*R-410A*

Unit Information

Approx. Op./Ship Weights:	*3087 / 3087 lbs. (±5%)*
Supply CFM/ESP:	*6200 / 2.5 in. wg.*
Pre-Filter FV / Qty:	*297.60 fpm / 6*
Final Filter FV / Qty:	*297.60 fpm / 6*
Exhaust CFM/ESP/TSP:	*4800 / 0.50 / 0.83 in. wg.*
Outside CFM:	*1400*
Ambient Temperature:	*90.7 ºF DB / 73.8 ºF WB*
Return Temperature:	*75 ºF DB / 62 ºF WB*

Static Pressure

External:	*2.50 in. wg.*	Economizer:	*0.10 in. wg.*
Evaporator:	*0.38 in. wg.*	Heating:	*0.20 in. wg.*
Filters Clean:	*0.38 in. wg.*	Cabinet:	*0.05 in. wg.*
Dirt Allowance	*0.5 in. wg.*	Re-Heat Coil:	*0.05 in. wg.*
		Total:	*4.16 in. wg.*

Cooling Section

	Gross	Net
Total Capacity:	*313.93*	*297.13 MBH*
Sensible Capacity:	*212.20*	*195.40 MBH*
Latent Capacity:	*101.72 MBH*	
Mixed Air Temp:	*78.55 ºF DB*	*64.94 ºF WB*
Entering Air Temp:	*78.55 ºF DB*	*64.94 ºF WB*
Lv Air Temp (Coil):	*46.25 ºF DB*	*46.13 ºF WB*
Lv Air Temp (Unit)	*48.73 ºF DB*	*47.29 ºF WB*
Digital Comp. Capacity Ratio:	*100%*	
Supply Air Fan:	*1 x 270D60 @ 6.01 BHP*	
SA Fan RPM / Width:	*1487 / 3.643"*	
Exhaust Air Fan:	*1 x RM220A @ 1.67 BHP*	
EA Fan RPM / Width:	*1090 / 4.930"*	
Evaporator Coil:	*19.9 ft² / 6 Rows / 12 FPI*	
Evaporator Face Velocity:	*312.2 fpm*	

Heating Section

PreHeat Type:	*Std (No Preheat)*
Heating Type:	*Nat. Gas Heat*
Heating CFM:	*6200*
Total Capacity:	*218.7 MBH*
OA Temp:	*16.4 ºF DB / 13.2 ºF WB*
RA Temp:	*75.0 ºF DB / 62.0 ºF WB*
Entering Air Temp:	*61.8 ºF DB / 54.0 ºF WB*
Leaving Air Temp:	*94.4 ºF DB / 65.8 ºF WB*
Input:	*270.0 MBH*
Heater Qty:	*1*
Consumption:	*270.0 MBH*
Total Turndown Ratio:	*9:1*

Re-Heat Coil:

Capacity:	*159 MBH*
LA DB / WB:	*70.00 ºF / 56.36 ºF*
RH:	*42%*

Rating Information

Cooling Capacity (MBH):	*322.0*
Cooling EER:	*11*
Cooling IEER:	*12*

Rated in accordance with AHRI 340/360

Application EER @ Op. Conditions: *9.6*

Electrical Data

Rating:	*460/3/60*	Minimum Circuit Amp:	*72*
Unit FLA:	*66*	Maximum Overcurrent:	*90*
SCCR:	*5 KAIC*		

	Qty	HP	VAC	Phase	RPM	FLA	RLA
Compressor 1:	1		460	3			23.1
Compressor 2:	1		460	3			23.1
Condenser Fans:	3	0.75	460	3	1080	1.8	
Supply Fan:	1	7.50	460	3	1760	11.0	
Exhaust Fan:	1	2.00	460	3	1760	3.4	
Combustion:	1	0.25	460	1	3210	0.9	

Cabinet Sound Power Levels*

Octave Bands:	**63**	**125**	**250**	**500**	**1000**	**2000**	**4000**	**8000**
Discharge LW(dB):	94	92	93	92	89	89	89	85
Return LW(dB):	85	85	80	73	73	70	63	56

**Sound power levels are given for informational purposes only. The sound levels are not guaranteed.*

RTU-02

27.0" STAR Plenum

2425 South Yukon Ave - Tulsa, Oklahoma 74107-2728 - Ph. (918) 583-2266 Fax (918) 583-6094
AAONEcat32 Ver. 4.317 (SN: 5593632-RL5UQX09)

JOB INFORMATION:

Job Name:	*WCC SD Jacobs*
Job Tag:	*RTU-2 RN30*
Rep Firm:	
Date:	*12/20/2021*

WHEEL SPECIFICATION:

Max RPM:	*1,800*
Diameter x Qty:	*27.4 in. x 1*
Width%:	*99*
Tip Speed:	*10,667 FPM*
Inertia:	*16 WR²*

OPERATING CONDITIONS:

Air Flow:	*6,200 CFM*
Static Pressure:	*4.16 in. Wg.*
Plenum DP:	*0.00 in. Wg.*
Inlet Grill DP:	*0.00 in. Wg.*
TSP:	*4.16 in. Wg.*
Site Altitude:	*0.00 Ft*
TSP @ Sea Level:	*4.16 in. Wg.*

MOTOR SELECTION:

Rated HP / Bypass:	*7.5 / No*
Frame Size:	*213T*
Nominal RPM:	*1760*
VAC/PH/HZ:	*460/3/60*
Efficiency	*Premium / 0.91*
Enclosure Type:	*ODP*
Max Inertial Load:	*64 WR²*

FAN PERFORMANCE:

RPM:	*1487*
BHP:	*6.01*
Efficiency:	*67.7%*
In/Out Velocity:	*1619/1694 FPM*
Plenum Out Velocity:	*103 FPM*

FAN SOUND POWER (Inlet/Outlet):

Octave Band: **(Re 10^-12 watts)**

1	2	3	4	5	6	7	8
92	*89*	*86*	*86*	*85*	*86*	*85*	*84*
94	*92*	*93*	*94*	*92*	*92*	*93*	*89*

SOUND POWER A-Weighted: 95 / 99 dB

Max Duct SP with Blocked Airway: **5.1 in. Wg. @ 1487 rpm**

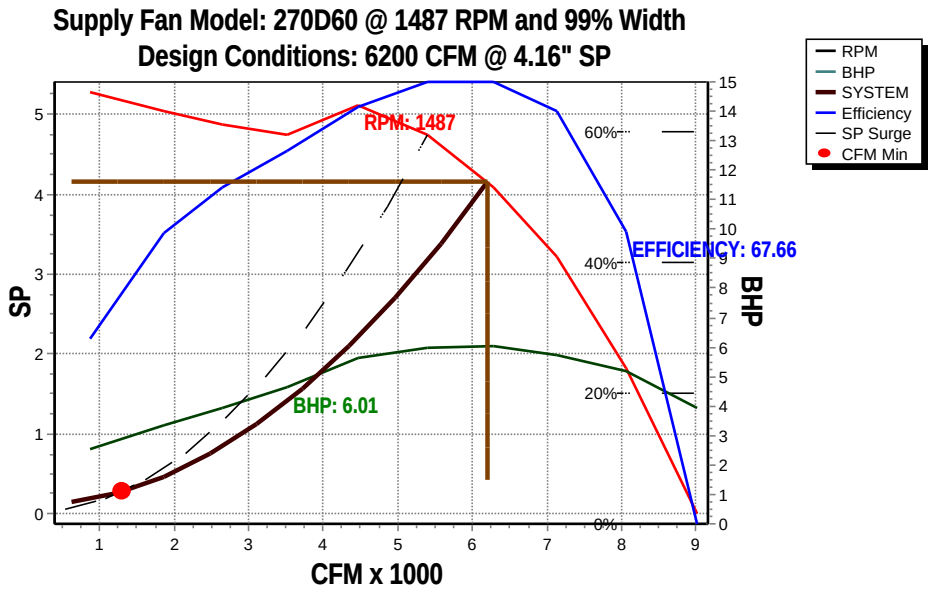

RTU-02

22.0" STAR Plenum

2425 South Yukon Ave - Tulsa, Oklahoma 74107-2728 - Ph. (918) 583-2266 Fax (918) 583-6094
AAONEcat32 Ver. 4.317 (SN: 5593632-RL5UQX09)

JOB INFORMATION:

Job Name:	*WCC SD Jacobs*
Job Tag:	*RTU-2 RN30*
Rep Firm:	
Date:	*12/20/2021*

WHEEL SPECIFICATION:

Max RPM:	*2,200*
Diameter x Qty:	*22.0 in. x 1*
CFM:	*4800*
Tip Speed:	*6,278 FPM*
Inertia:	*5 WR²*

OPERATING CONDITIONS:

Air Flow:	*4,800 CFM*
Static Pressure:	*0.50 in. Wg.*
Relief Dampers DP:	*0.33 in. Wg.*
TSP:	*0.83 in. Wg.*
Site Altitude:	*0.00 Ft*
TSP @ Sea Level:	*0.83 in. Wg.*

MOTOR SELECTION:

Rated HP / Bypass:	*2 / No*
Frame Size:	*145T*
Nominal RPM:	*1760*
VAC/PH/HZ:	*460/3/60*
Efficiency	*Premium / 0.865*
Enclosure Type:	*ODP*
Max Inertial Load:	*27 WR²*

FAN PERFORMANCE:

RPM:	*1090*
BHP:	*1.67*
Efficiency:	*37.3%*
In/Out Velocity:	*1468/1616 FPM*
Plenum Out Velocity:	*80 FPM*

FAN SOUND POWER (Inlet/Outlet):

Octave Band: **(Re 10^-12 watts)**

1	2	3	4	5	6	7	8
83	*84*	*84*	*77*	*73*	*71*	*65*	*58*
83	*84*	*84*	*77*	*73*	*71*	*65*	*58*

SOUND POWER A-Weighted: 84 / 84 dB

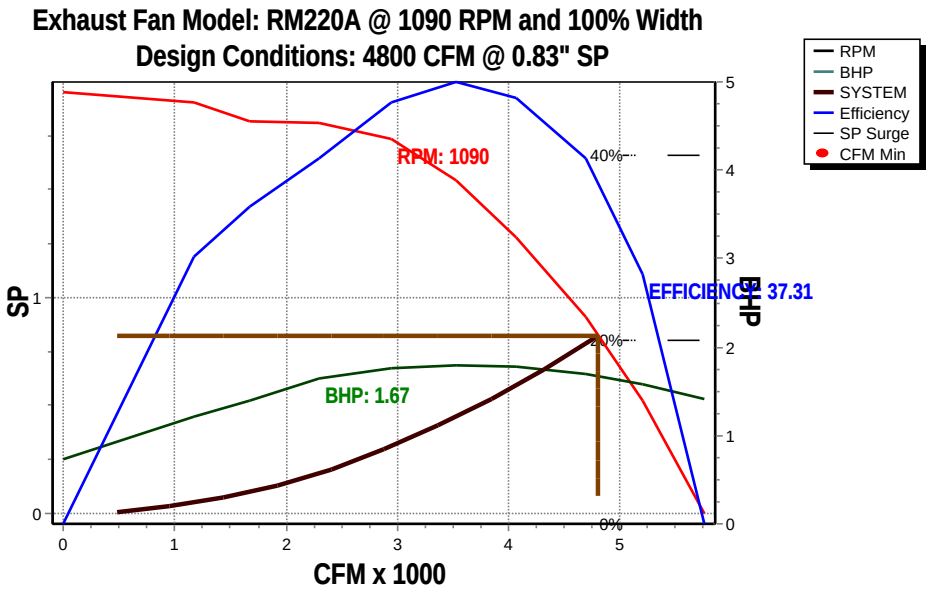

RTU-02

Unit Submittal

2425 South Yukon Ave - Tulsa, Oklahoma 74107-2728 - Ph. (918) 583-2266 Fax (918) 583-6094
AAONEcat32 Ver. 4.317 (SN: 5593632-RL5UQX09)

1A 1B 1C 1D 2 3 4 5A 5B 5C 6A 6B 6C 7 8 9 10 11 12 13 14A 14B 15 16 17 18 19 20 21 22 23

RN-030-3-A-EB19-34B:BEDD-D0K-DQG-AHC-EJQA5B3-00-00A0000VB

Tag: RTU-2 RN30

Job Name: *WCC SD Jacobs*
Job Number: *WCC SD Jacobs*
Unit Submittal For:
Unit Submittal Date: *December 20, 2021*

	Base Option	Description
R	Series	Roof Top Unit
N	Generation	Ninth Generation
030	Unit Size	Thirty
3	Voltage	460V/3Ø/60Hz
A	Interior Protection	Interior Corrosion Protection
E	Refrigerant Style	R-410A Variable Capacity Scroll Compressor (VCC)
B	Unit Configuration	Air-Cooled Cond. + 6 Row Evap. Coil
1	Coil Coating	Polymer E-Coated Evap. and Cond. Coils
9	Cooling/Heat Pump Staging	Modulating - 1 VCC + 1 On/Off Comp.
3	Heating Type	Natural Gas Stainless Steel
4	Heating Designation	Heat 4 - 270 MBtuh
B	Heating Staging	High Turndown Modulating Gas - Temperature Control

	Feature Option	Description
B	**1A.** RA/OA Section	Economizer + Power Exhaust
E	**1B.** RA/EA Blower Configuration	1 Blower + Premium Efficiency Motor + 1 VFD
D	**1C.** RA/EA Blower	22" Backward Curved Plenum
D	**1D.** RA/EA Blower Motor	2.0 hp - 1760 rpm
D	**2.** OA Control	Fully Modulating Actuator - Enthalpy Limit
0	**3.** Heat Options	Standard
K	**4.** Maintenance Options	115V Convenience Outlet - Factory Wired + Blower Aux. Contact - LVTB + Remote Start/Stop Terminals - LVTB
D	**5A.** SA Blower Configuration	1 Blower + Premium Efficiency Motor + 1 VFD
Q	**5B.** SA Blower	27" Direct Drive Backward Curved Plenum - 60% Width
G	**5C.** SA Motor	7.5 hp - 1760 rpm
A	**6A.** Pre Filter Type	2" Pleated Pre Filter - 30% Eff
H	**6B.** Unit Filter Type	4" Pleated - 95% Eff - MERV 14
C	**6C.** Filter Options	Clogged Filter Switch + Magnehelic Gauge
E	**7.** Refrigeration Control	Freeze Stat
J	**8.** Refrigeration Options	HGB Lead + HGB Lag + MHGR
Q	**9.** Refrigeration Accessories	VFD Condenser Fan - Head Pressure Control + Sight Glass + Compressor Isolation Valves
A	**10.** Power Options	Non-fused Disconnect Power Switch - 100 Amps
5	**11.** Safety Options	RA and SA Smoke Detector + Remote Safety Shutdown Terminals + High Condensate Level Switch
B	**12.** Controls	Phase & Brown Out Protection
3	**13.** Special Controls	VAV Single Zone Unit Controller - VAV Cool + VAV Heat
0	**14A.** Outside Air Configuration	Standard - None
0	**14B.** Preheat Sizing	Standard - None
0	**15.** Glycol Percent	Water or No WSHP
0	**16.** Interior Cabinet Options	Standard - Double Wall + R-13 Foam Insulation + Stainless Steel Drain Pan
A	**17.** Exterior Cabinet Options	Base Insulation
0	**18.** Electrical Rating	Standard - 5 KAIC
0	**19.** Code Options	Standard - ETL U.S.A. Listing
0	**20.** Crating	Standard
0	**21.** Water-Cooled Cond.	Standard - None
V	**22.** Control Vendors	VCC-X Controls + Integrated BACnet MSTP
B	**23.** Type	Standard - Includes AAON Gray Paint

RTU-02

VCCX Components

2425 South Yukon Ave - Tulsa, Oklahoma 74107-2728 - Ph. (918) 583-2266 Fax (918) 583-6094
AAONEcat32 Ver. 4.317 (SN: 5593632-RL5UQX09)

1A 1B 1C 1D 2 3 4 5A 5B 5C 6A 6B 6C 7 8 9 10 11 12 13 14A 14B 15 16 17 18 19 20 21 22 23

RN-030-3-A-EB19-34B:BEDD-D0K-DQG-AHC-EJQA5B3-00-00A0000VB

Tag: RTU-2 RN30

Job Name: ***WCC SD Jacobs*** **VCCX For:**

Job Number: ***WCC SD Jacobs*** **VCCX Date:** ***December 20, 2021***

Hardware Included For VCCX Controller

Part #	Included Parts	Assigned Channel	BACnet Point
ASM01698	VCCX2 CONTROLLER		
ASM01692	OSA Temp/Hum Sensor	EBUS2 communicating sensor	AI:16,AI:17,AI:18,AI:19
ASM01820	Space Digital Temp/Hum Sensor	EBUS3 communicating sensor	AI:12,AI:13
R82890	Supply Temp Sensor - Field Installed	VCCX control point AI 3	AI:9
R37030	Building Pressure Sensor	VCCX control point AI 5	AI:23
	Supply Fan Control Signal 0-10VDC	VCCX control point AO 1	AI:22
	Economizer	VCCX control point AO 2	AI:30
	Building Pressure Control Signal	VCCX control point AO 4	AI:24
R62330	Proof of Air Flow	VCCX control point BI 1	BI:6, BI:24
R64580	Dirty Filter Sensor	VCCX control point BI 2	BI:25
	Safety Shut Down	VCCX control point BI 8	BI:26
	Supply Fan	Configured Relay Point	BI:47
	Exhaust Fan	Configured Relay Point	BI:48
ASM02201	DIGITAL REFRIGERATION MODULE		
R42680	Comp Discharge Temp A	RSMD point TEMP1	AI:66
V38391	Suction Pressure Sensor A	RSMD point SP-1	AI:48
V38410	Discharge Pressure Sensor A	RSMD point HP-1	AI:50
V38410	Discharge Pressure Sensor B	RSMD point HP-2	AI:75
	Modulated Condenser Signal AB	RSMD point AO1	AI:46
	Comp Status Input A	RSMD point BIN1	BI:77
	Comp Status Input B	RSMD point BIN2	BI:78
	Emergency Shutdown	RSMD point BIN4	BI:83
	Comp Unload Signal A	RSMD point T1	AI:44
	Comp Enable A	RSMD Fixed Relay point	BI:84
	Comp Enable B	RSMD Fixed Relay point	BI:85
ASM01670	MODULATING HOT GAS REHEAT MODULE		
	Reheat HGR Valve	MHGRV-X	AI:42
ASM01695	MODULATING GAS MODULE		
	Gas Valve Signal 1B	MODGAS-XWR Gas Valve 2	
	Gas Valve Signal 1A	MODGAS-XWR Gas Valve 1	
	Proof of Ignition 1B	MODGAS-XWR BI4	
	Proof of Ignition 1A	MODGAS-XWR BI3	
	Mod Heat Stage 2 (IGN 1B)	MODGAS-XWR Heat 2 Relay	
	Mod Heat Stage 1 (IGN 1A)	MODGAS-XWR Heat 1 Relay	
	Low Speed Enable	MODGAS-XWR Low Speed Relay	

RTU-02

RN SERIES
C - CABINET WITH ECONOMIZER ~ 16-30 TON AND POWER EXHAUST

CLEARANCES

LOCATION	• UNIT SIZE • 16 - 30 TON
OUTSIDE AIR (BACK)	48
CONTROLS SIDE (FRONT)	48
LEFT SIDE	6
RIGHT SIDE	60
TOP	UNOBSTRUCTED

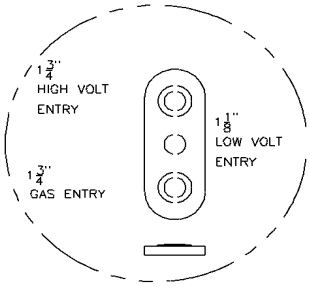

DETAIL A

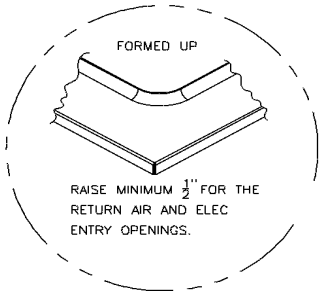

DETAIL B

NUMBER OF CONDENSER FANS

16,18 & 20 TON - 2 FANS

25 & 30 TON - 3 FANS

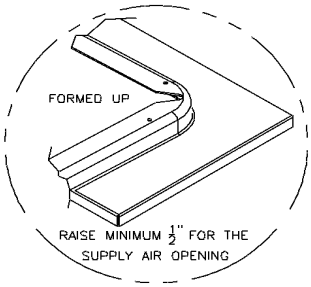

DETAIL C

TOP VIEW

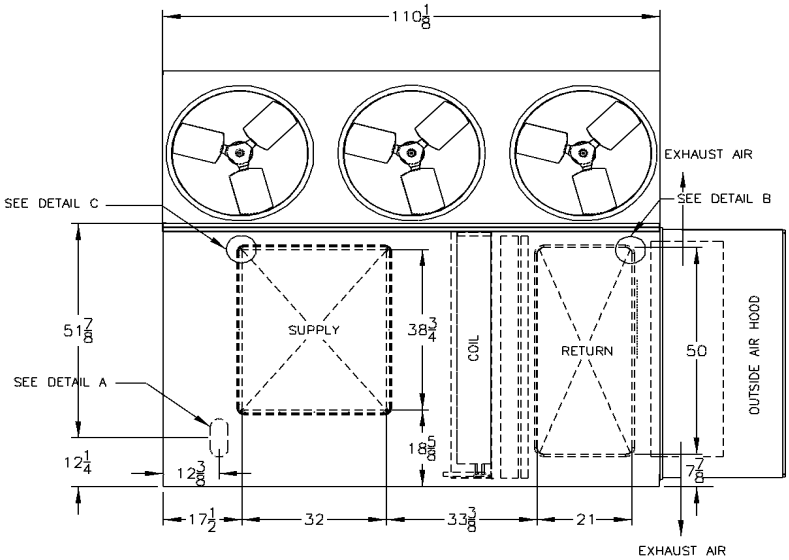

FRONT VIEW

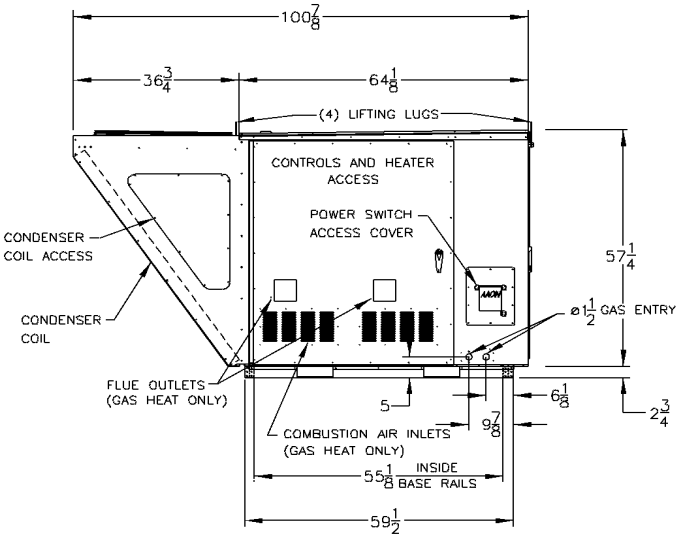

RIGHT SIDE VIEW

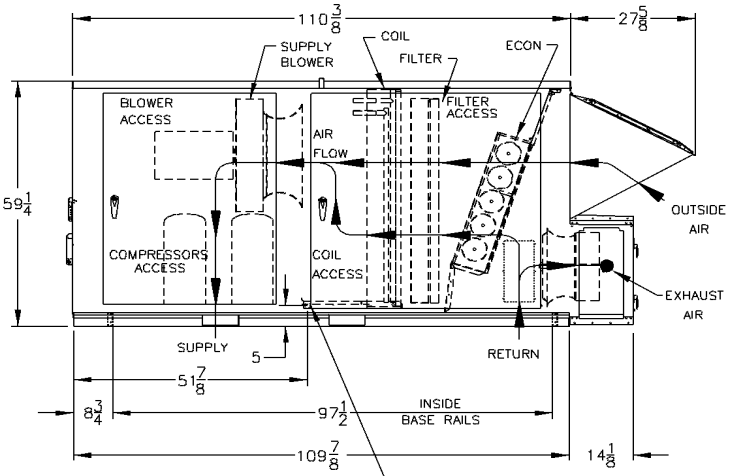

1" MPT STAINLESS CONDENSATE CONNECTION. 'P' TRAP FURNISHED BY MANUFACTURER FOR DRAIN CONNECTION.

RNC-00003 REV:B 08/23/10 JWC

NOTE: ALL DIMENSIONS ARE IN INCHES

RTU-02

RNC CABINET
AIR COOLED CONDENSING UNIT WITH POWER EXHAUST

AAON®

RN-030-3-A-EB19-34B:BEDD-D0K-DQG-AHC-EJQA5B3-00-00A0000VB

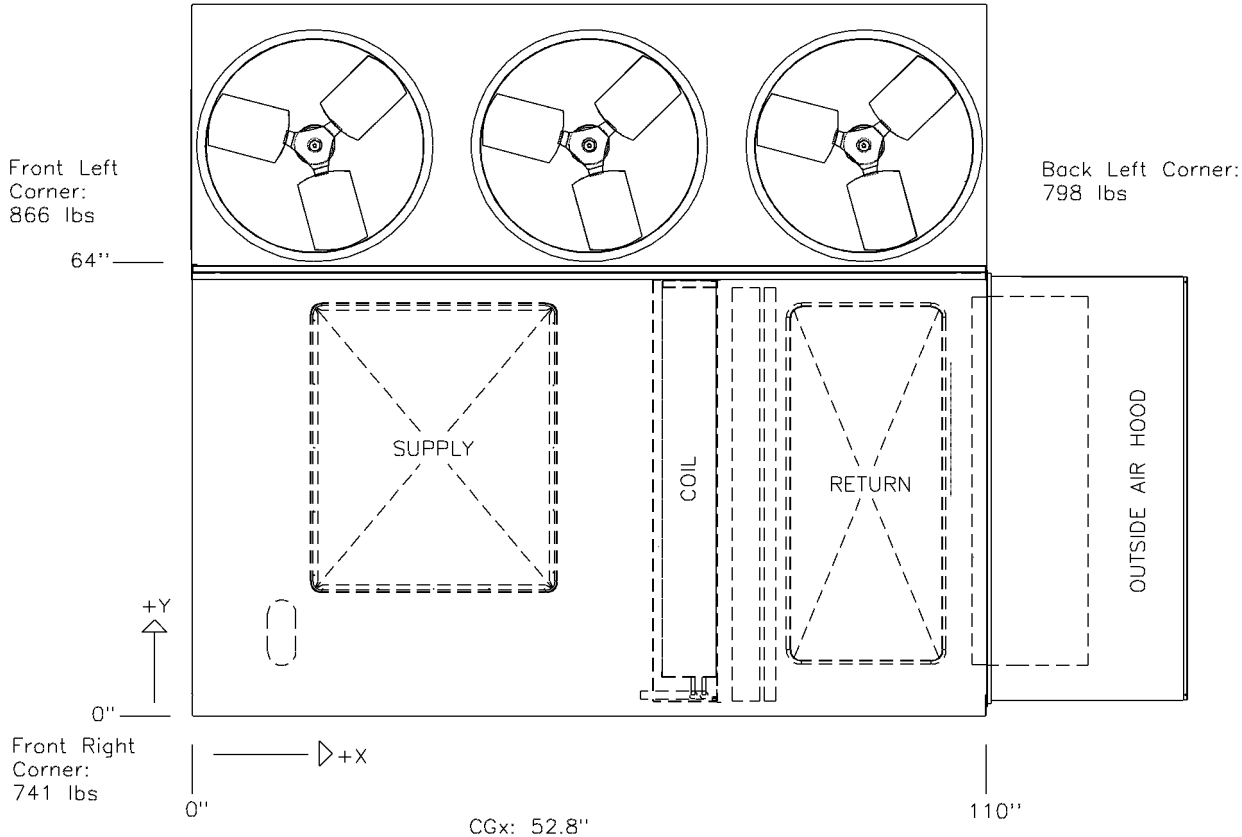

Total Weight:
3087 lbs (±5%)

Disclaimer:
This weight estimate does not account for any SPAs.

RTU-03

Unit Rating

2425 South Yukon Ave - Tulsa, Oklahoma 74107-2728 - Ph. (918) 583-2266 Fax (918) 583-6094
AAONEcat32 Ver. 4.317 (SN: 5593632-RL5UQX09)

1A 1B 1C 1D 2 3 4 5A 5B 5C 6A 6B 6C 7 8 9 10 11 12 13 14A 14B 15 16 17 18 19 20 21 22 23

RN-030-3-A-EB19-34B:BEDF-D0K-DQL-AHC-EJQA5B3-00-00A0000VB

Tag: RTU-3 RN30

Job Information

Job Name:	*WCC SD Jacobs*
Job Number:	*WCC SD Jacobs*
Site Altitude:	*0 ft*
Refrigerant	*R-410A*

Unit Information

Approx. Op./Ship Weights:	*3190 / 3190 lbs. (±5%)*
Supply CFM/ESP:	*8400 / 2.5 in. wg.*
Pre-Filter FV / Qty:	*403.20 fpm / 6*
Final Filter FV / Qty:	*403.20 fpm / 6*
Exhaust CFM/ESP/TSP:	*7200 / 0.50 / 1.10 in. wg.*
Outside CFM:	*1200*
Ambient Temperature:	*90.7 ºF DB / 73.8 ºF WB*
Return Temperature:	*75 ºF DB / 62 ºF WB*

Static Pressure

External:	*2.50 in. wg.*	Economizer:	*0.17 in. wg.*
Evaporator:	*0.58 in. wg.*	Heating:	*0.34 in. wg.*
Filters Clean:	*0.59 in. wg.*	Cabinet:	*0.11 in. wg.*
Dirt Allowance	*0.5 in. wg.*	Re-Heat Coil:	*0.08 in. wg.*
		Total:	*4.88 in. wg.*

Cooling Section

	Gross	Net
Total Capacity:	*331.97*	*304.35 MBH*
Sensible Capacity:	*244.28*	*216.67 MBH*
Latent Capacity:	*87.68 MBH*	
Mixed Air Temp:	*77.24 ºF DB*	*63.88 ºF WB*
Entering Air Temp:	*77.24 ºF DB*	*63.88 ºF WB*
Lv Air Temp (Coil):	*49.89 ºF DB*	*49.51 ºF WB*
Lv Air Temp (Unit)	*52.90 ºF DB*	*50.83 ºF WB*
Digital Comp. Capacity Ratio:	*100%*	
Supply Air Fan:	*1 x 270D60 @ 10.09 BHP*	
SA Fan RPM / Width:	*1788 / 3.680"*	
Exhaust Air Fan:	*1 x RM220A @ 4.34 BHP*	
EA Fan RPM / Width:	*1524 / 4.930"*	
Evaporator Coil:	*19.9 ft² / 6 Rows / 12 FPI*	
Evaporator Face Velocity:	*422.9 fpm*	

Heating Section

PreHeat Type:	*Std (No Preheat)*
Heating Type:	*Nat. Gas Heat*
Heating CFM:	*8400*
Total Capacity:	*218.7 MBH*
OA Temp:	*16.4 ºF DB / 13.2 ºF WB*
RA Temp:	*75.0 ºF DB / 62.0 ºF WB*
Entering Air Temp:	*66.6 ºF DB / 57.1 ºF WB*
Leaving Air Temp:	*90.7 ºF DB / 65.6 ºF WB*
Input:	*270.0 MBH*
Heater Qty:	*1*
Consumption:	*270.0 MBH*
Total Turndown Ratio:	*9:1*

Re-Heat Coil:

Capacity:	*182 MBH*
LA DB / WB:	*70.00 ºF / 57.79 ºF*
RH:	*48%*

Rating Information

Cooling Capacity (MBH):	*322.0*
Cooling EER:	*11*
Cooling IEER:	*12*

Rated in accordance with AHRI 340/360

Application EER @ Op. Conditions: *8.9*

Electrical Data

Rating:	*460/3/60*	Minimum Circuit Amp:	*86*
Unit FLA:	*80*	Maximum Overcurrent:	*100*
SCCR:	*5 KAIC*		

	Qty	HP	VAC	Phase	RPM	FLA	RLA
Compressor 1:	1		460	3			23.1
Compressor 2:	1		460	3			23.1
Condenser Fans:	3	0.75	460	3	1080	1.8	
Supply Fan:	1	15.00	460	3	1760	21.0	
Exhaust Fan:	1	5.00	460	3	1760	7.6	
Combustion:	1	0.25	460	1	3210	0.9	

Cabinet Sound Power Levels*

Octave Bands:	**63**	**125**	**250**	**500**	**1000**	**2000**	**4000**	**8000**
Discharge LW(dB):	97	95	97	98	94	92	93	89
Return LW(dB):	93	90	88	83	80	79	74	66

**Sound power levels are given for informational purposes only. The sound levels are not guaranteed.*

RTU-03

27.0" STAR Plenum

2425 South Yukon Ave - Tulsa, Oklahoma 74107-2728 - Ph. (918) 583-2266 Fax (918) 583-6094
AAONEcat32 Ver. 4.317 (SN: 5593632-RL5UQX09)

JOB INFORMATION:

Job Name:	*WCC SD Jacobs*
Job Tag:	*RTU-3 RN30*
Rep Firm:	
Date:	*12/20/2021*

WHEEL SPECIFICATION:

Max RPM:	*1,800*
Diameter x Qty:	*27.4 in. x 1*
Width%:	*100*
Tip Speed:	*12,826 FPM*
Inertia:	*16 WR²*

OPERATING CONDITIONS:

Air Flow:	*8,400 CFM*
Static Pressure:	*4.88 in. Wg.*
Plenum DP:	*0.00 in. Wg.*
Inlet Grill DP:	*0.00 in. Wg.*
TSP:	*4.88 in. Wg.*
Site Altitude:	*0.00 Ft*
TSP @ Sea Level:	*4.88 in. Wg.*

MOTOR SELECTION:

Rated HP / Bypass:	*15 / No*
Frame Size:	*254T*
Nominal RPM:	*1760*
VAC/PH/HZ:	*460/3/60*
Efficiency	*Premium / 0.93*
Enclosure Type:	*ODP*
Max Inertial Load:	*149 WR²*

FAN PERFORMANCE:

RPM:	*1788*
BHP:	*10.09*
Efficiency:	*64.0%*
In/Out Velocity:	*2193/2295 FPM*
Plenum Out Velocity:	*140 FPM*

FAN SOUND POWER (Inlet/Outlet):

Octave Band: **(Re 10^-12 watts)**

1	2	3	4	5	6	7	8
95	93	91	90	89	90	90	89
97	95	96	99	97	95	97	93

SOUND POWER A-Weighted: 99 / 103 dB

Max Duct SP with Blocked Airway: 7.4 in. Wg. @ 1788 rpm

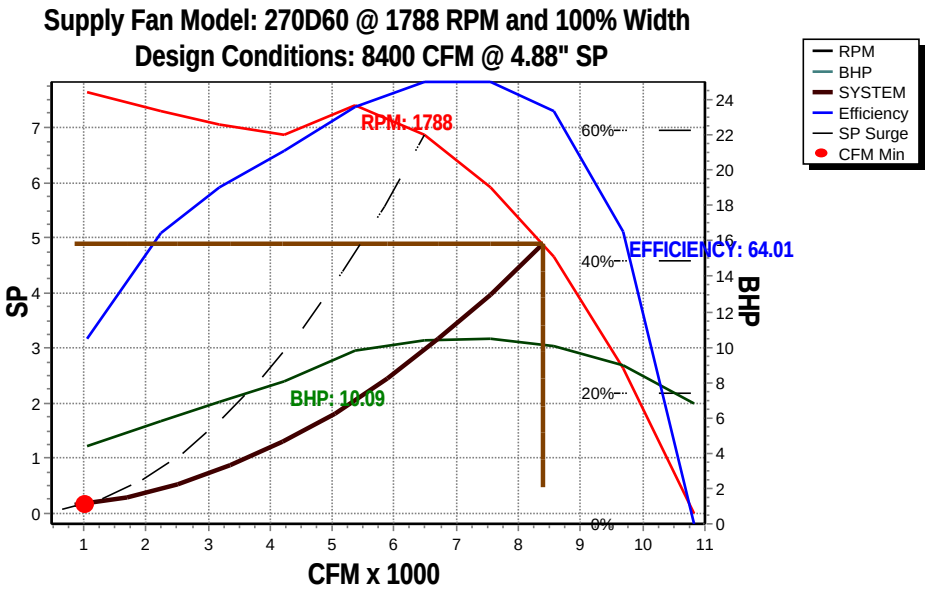

RTU-03

22.0" STAR Plenum

2425 South Yukon Ave - Tulsa, Oklahoma 74107-2728 - Ph. (918) 583-2266 Fax (918) 583-6094
AAONEcat32 Ver. 4.317 (SN: 5593632-RL5UQX09)

JOB INFORMATION:

Job Name:	*WCC SD Jacobs*
Job Tag:	*RTU-3 RN30*
Rep Firm:	
Date:	*12/20/2021*

WHEEL SPECIFICATION:

Max RPM:	*2,200*
Diameter x Qty:	*22.0 in. x 1*
CFM:	*7200*
Tip Speed:	*8,778 FPM*
Inertia:	*5 WR²*

OPERATING CONDITIONS:

Air Flow:	*7,200 CFM*
Static Pressure:	*0.50 in. Wg.*
Relief Dampers DP:	*0.60 in. Wg.*
TSP:	*1.10 in. Wg.*
Site Altitude:	*0.00 Ft*
TSP @ Sea Level:	*1.10 in. Wg.*

MOTOR SELECTION:

Rated HP / Bypass:	*5 / No*
Frame Size:	*184T*
Nominal RPM:	*1760*
VAC/PH/HZ:	*460/3/60*
Efficiency	*Premium / 0.895*
Enclosure Type:	*ODP*
Max Inertial Load:	*52 WR²*

FAN PERFORMANCE:

RPM:	*1524*
BHP:	*4.34*
Efficiency:	*28.6%*
In/Out Velocity:	*2202/2424 FPM*
Plenum Out Velocity:	*120 FPM*

FAN SOUND POWER (Inlet/Outlet):

Octave Band: **(Re 10^-12 watts)**

1	2	3	4	5	6	7	8
92	*90*	*93*	*90*	*82*	*81*	*77*	*69*
92	*90*	*93*	*90*	*82*	*81*	*77*	*69*

SOUND POWER A-Weighted: 93 / 93 dB

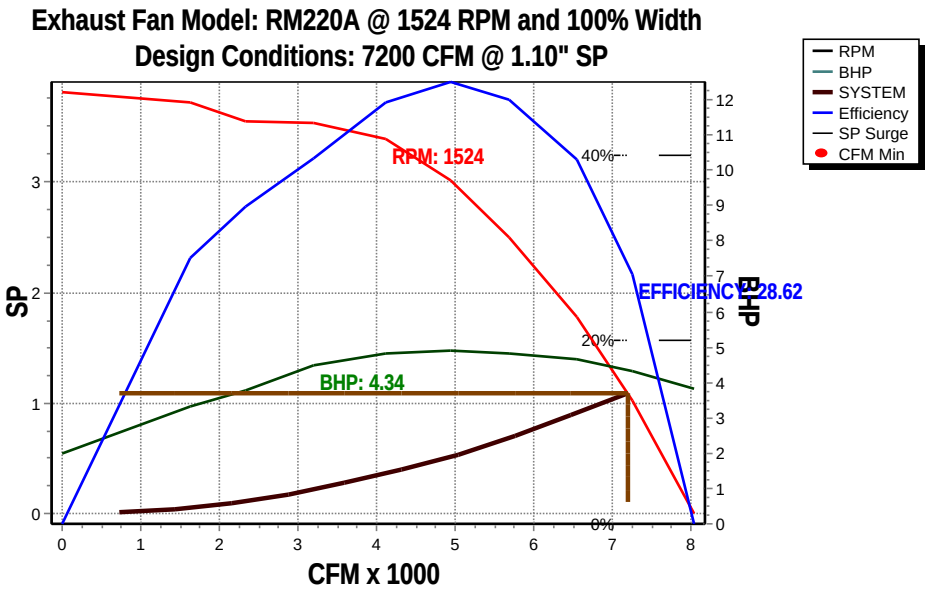

RTU-03

Unit Submittal

2425 South Yukon Ave - Tulsa, Oklahoma 74107-2728 - Ph. (918) 583-2266 Fax (918) 583-6094
AAONEcat32 Ver. 4.317 (SN: 5593632-RL5UQX09)

1A 1B 1C 1D 2 3 4 5A 5B 5C 6A 6B 6C 7 8 9 10 11 12 13 14A 14B 15 16 17 18 19 20 21 22 23

RN-030-3-A-EB19-34B:BEDF-D0K-DQL-AHC-EJQA5B3-00-00A0000VB

Tag: RTU-3 RN30

Job Name: *WCC SD Jacobs* **Unit Submittal For:**
Job Number: *WCC SD Jacobs* **Unit Submittal Date:** *December 20, 2021*

	Base Option	Description
R	Series	Roof Top Unit
N	Generation	Ninth Generation
030	Unit Size	Thirty
3	Voltage	460V/3Ø/60Hz
A	Interior Protection	Interior Corrosion Protection
E	Refrigerant Style	R-410A Variable Capacity Scroll Compressor (VCC)
B	Unit Configuration	Air-Cooled Cond. + 6 Row Evap. Coil
1	Coil Coating	Polymer E-Coated Evap. and Cond. Coils
9	Cooling/Heat Pump Staging	Modulating - 1 VCC + 1 On/Off Comp.
3	Heating Type	Natural Gas Stainless Steel
4	Heating Designation	Heat 4 - 270 MBtuh
B	Heating Staging	High Turndown Modulating Gas - Temperature Control

	Feature Option	Description
B	**1A.** RA/OA Section	Economizer + Power Exhaust
E	**1B.** RA/EA Blower Configuration	1 Blower + Premium Efficiency Motor + 1 VFD
D	**1C.** RA/EA Blower	22" Backward Curved Plenum
F	**1D.** RA/EA Blower Motor	5.0 hp - 1760 rpm
D	**2.** OA Control	Fully Modulating Actuator - Enthalpy Limit
0	**3.** Heat Options	Standard
K	**4.** Maintenance Options	115V Convenience Outlet - Factory Wired + Blower Aux. Contact - LVTB + Remote Start/Stop Terminals - LVTB
D	**5A.** SA Blower Configuration	1 Blower + Premium Efficiency Motor + 1 VFD
Q	**5B.** SA Blower	27" Direct Drive Backward Curved Plenum - 60% Width
L	**5C.** SA Motor	15 hp - 1760 rpm
A	**6A.** Pre Filter Type	2" Pleated Pre Filter - 30% Eff
H	**6B.** Unit Filter Type	4" Pleated - 95% Eff - MERV 14
C	**6C.** Filter Options	Clogged Filter Switch + Magnehelic Gauge
E	**7.** Refrigeration Control	Freeze Stat
J	**8.** Refrigeration Options	HGB Lead + HGB Lag + MHGR
Q	**9.** Refrigeration Accessories	VFD Condenser Fan - Head Pressure Control + Sight Glass + Compressor Isolation Valves
A	**10.** Power Options	Non-fused Disconnect Power Switch - 100 Amps
5	**11.** Safety Options	RA and SA Smoke Detector + Remote Safety Shutdown Terminals + High Condensate Level Switch
B	**12.** Controls	Phase & Brown Out Protection
3	**13.** Special Controls	VAV Single Zone Unit Controller - VAV Cool + VAV Heat
0	**14A.** Outside Air Configuration	Standard - None
0	**14B.** Preheat Sizing	Standard - None
0	**15.** Glycol Percent	Water or No WSHP
0	**16.** Interior Cabinet Options	Standard - Double Wall + R-13 Foam Insulation + Stainless Steel Drain Pan
A	**17.** Exterior Cabinet Options	Base Insulation
0	**18.** Electrical Rating	Standard - 5 KAIC
0	**19.** Code Options	Standard - ETL U.S.A. Listing
0	**20.** Crating	Standard
0	**21.** Water-Cooled Cond.	Standard - None
V	**22.** Control Vendors	VCC-X Controls + Integrated BACnet MSTP
B	**23.** Type	Standard - Includes AAON Gray Paint

RTU-03

VCCX Components

2425 South Yukon Ave - Tulsa, Oklahoma 74107-2728 - Ph. (918) 583-2266 Fax (918) 583-6094
AAONEcat32 Ver. 4.317 (SN: 5593632-RL5UQX09)

1A 1B 1C 1D 2 3 4 5A 5B 5C 6A 6B 6C 7 8 9 10 11 12 13 14A 14B 15 16 17 18 19 20 21 22 23

RN-030-3-A-EB19-34B:BEDF-D0K-DQL-AHC-EJQA5B3-00-00A0000VB

Tag: RTU-3 RN30

Job Name: ***WCC SD Jacobs*** **VCCX For:**

Job Number: ***WCC SD Jacobs*** **VCCX Date:** ***December 20, 2021***

Hardware Included For VCCX Controller

Part #	Included Parts	Assigned Channel	BACnet Point
ASM01698	VCCX2 CONTROLLER		
ASM01692	OSA Temp/Hum Sensor	EBUS2 communicating sensor	AI:16,AI:17,AI:18,AI:19
ASM01820	Space Digital Temp/Hum Sensor	EBUS3 communicating sensor	AI:12,AI:13
R82890	Supply Temp Sensor - Field Installed	VCCX control point AI 3	AI:9
R37030	Building Pressure Sensor	VCCX control point AI 5	AI:23
	Supply Fan Control Signal 0-10VDC	VCCX control point AO 1	AI:22
	Economizer	VCCX control point AO 2	AI:30
	Building Pressure Control Signal	VCCX control point AO 4	AI:24
R62330	Proof of Air Flow	VCCX control point BI 1	BI:6, BI:24
R64580	Dirty Filter Sensor	VCCX control point BI 2	BI:25
	Safety Shut Down	VCCX control point BI 8	BI:26
	Supply Fan	Configured Relay Point	BI:47
	Exhaust Fan	Configured Relay Point	BI:48
ASM02201	DIGITAL REFRIGERATION MODULE		
R42680	Comp Discharge Temp A	RSMD point TEMP1	AI:66
V38391	Suction Pressure Sensor A	RSMD point SP-1	AI:48
V38410	Discharge Pressure Sensor A	RSMD point HP-1	AI:50
V38410	Discharge Pressure Sensor B	RSMD point HP-2	AI:75
	Modulated Condenser Signal AB	RSMD point AO1	AI:46
	Comp Status Input A	RSMD point BIN1	BI:77
	Comp Status Input B	RSMD point BIN2	BI:78
	Emergency Shutdown	RSMD point BIN4	BI:83
	Comp Unload Signal A	RSMD point T1	AI:44
	Comp Enable A	RSMD Fixed Relay point	BI:84
	Comp Enable B	RSMD Fixed Relay point	BI:85
ASM01670	MODULATING HOT GAS REHEAT MODULE		
	Reheat HGR Valve	MHGRV-X	AI:42
ASM01695	MODULATING GAS MODULE		
	Gas Valve Signal 1B	MODGAS-XWR Gas Valve 2	
	Gas Valve Signal 1A	MODGAS-XWR Gas Valve 1	
	Proof of Ignition 1B	MODGAS-XWR BI4	
	Proof of Ignition 1A	MODGAS-XWR BI3	
	Mod Heat Stage 2 (IGN 1B)	MODGAS-XWR Heat 2 Relay	
	Mod Heat Stage 1 (IGN 1A)	MODGAS-XWR Heat 1 Relay	
	Low Speed Enable	MODGAS-XWR Low Speed Relay	

RTU-03

RN SERIES
C - CABINET WITH ECONOMIZER ~ 16-30 TON AND POWER EXHAUST

CLEARANCES

LOCATION	• UNIT SIZE • 16 - 30 TON
OUTSIDE AIR (BACK)	48
CONTROLS SIDE (FRONT)	48
LEFT SIDE	6
RIGHT SIDE	60
TOP	UNOBSTRUCTED

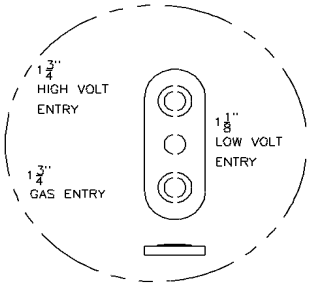

DETAIL A

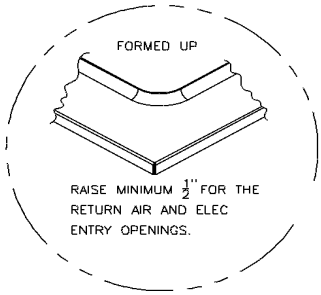

DETAIL B

NUMBER OF CONDENSER FANS

16,18 & 20 TON - 2 FANS

25 & 30 TON - 3 FANS

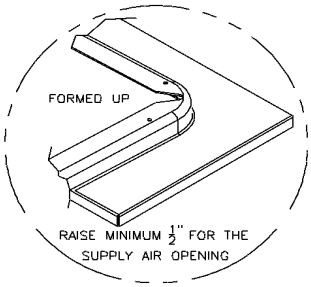

DETAIL C

TOP VIEW

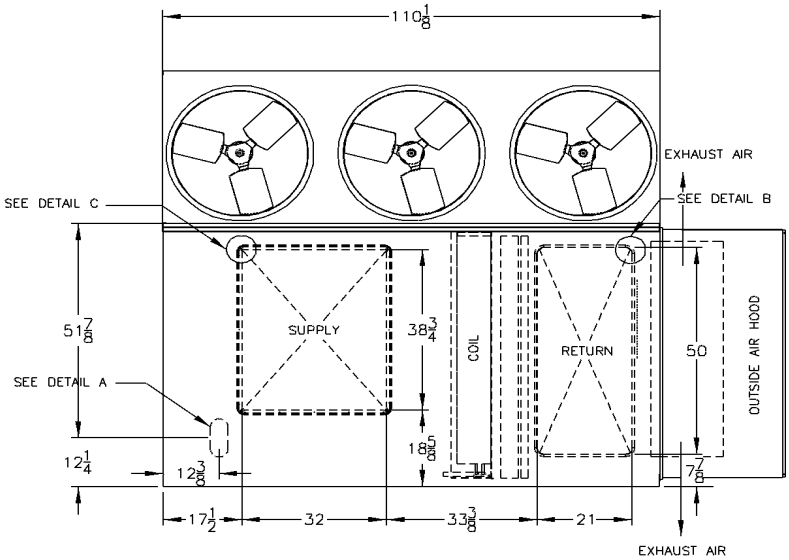

FRONT VIEW

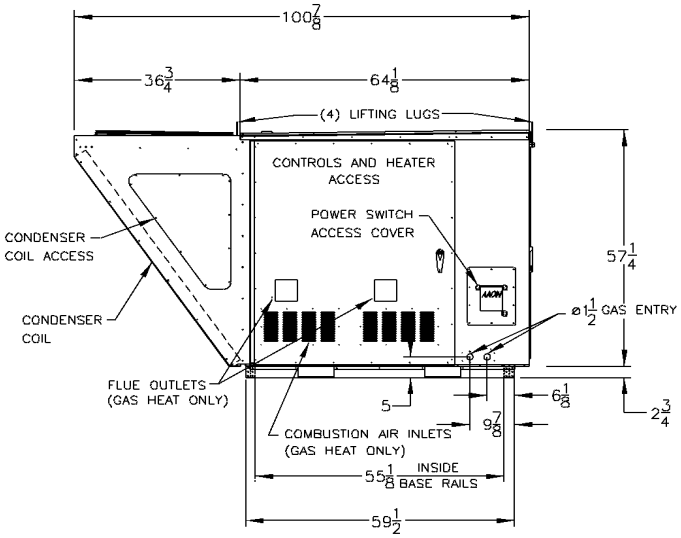

RIGHT SIDE VIEW

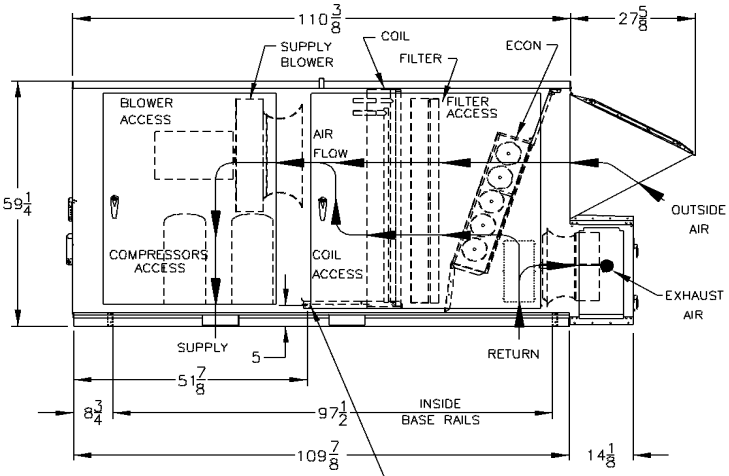

1" MPT STAINLESS CONDENSATE CONNECTION. 'P' TRAP FURNISHED BY MANUFACTURER FOR DRAIN CONNECTION.

RNC-00003 REV:B 08/23/10 JWC

NOTE: ALL DIMENSIONS ARE IN INCHES

RTU-03

RNC CABINET
AIR COOLED CONDENSING UNIT
WITH POWER EXHAUST

AAON®

RN-030-3-A-EB19-34B:BEDF-D0K-DQL-AHC-EJQA5B3-00-00A0000VB

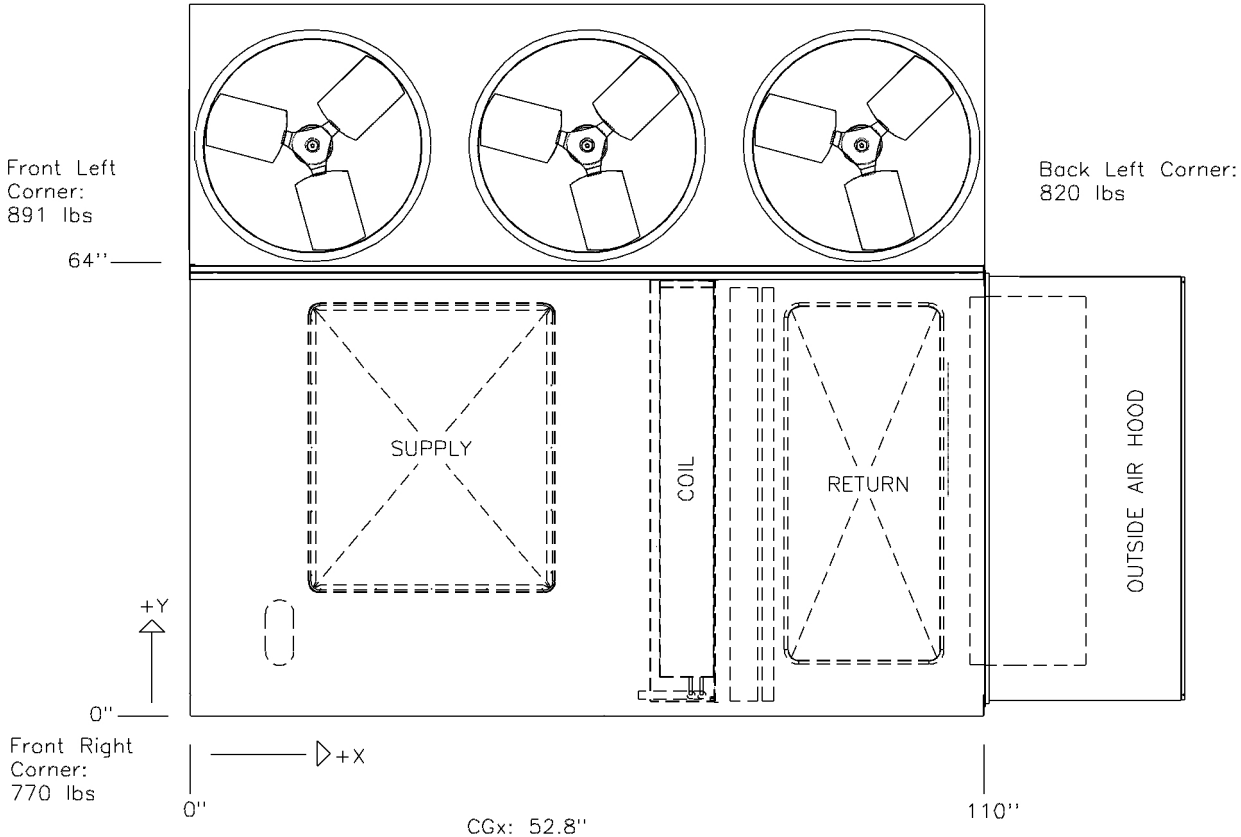

Total Weight:
3190 lbs (±5%)

Disclaimer:
This weight estimate does not account for any SPAs.

RTU-04

Unit Rating

2425 South Yukon Ave - Tulsa, Oklahoma 74107-2728 - Ph. (918) 583-2266 Fax (918) 583-6094
AAONEcat32 Ver. 4.317 (SN: 5593632-RL5UQX09)

1A 1B 1C 1D 2 3 4 5A 5B 5C 6A 6B 6C 7 8 9 10 11 12 13 14A 14B 15 16 17 18 19 20 21 22 23

RN-030-3-A-EB19-34B:BEDG-D0K-DDL-AHC-EJQB5B3-00-00A0000VB

Tag: RTU-4 RN30

Job Information

Job Name:	*WCC SD Jacobs*
Job Number:	*WCC SD Jacobs*
Site Altitude:	*0 ft*
Refrigerant	*R-410A*

Unit Information

Approx. Op./Ship Weights:	*3228 / 3228 lbs. (±5%)*
Supply CFM/ESP:	*9700 / 2.5 in. wg.*
Pre-Filter FV / Qty:	*465.60 fpm / 6*
Final Filter FV / Qty:	*465.60 fpm / 6*
Exhaust CFM/ESP/TSP:	*8500 / 0.50 / 1.29 in. wg.*
Outside CFM:	*1200*
Ambient Temperature:	*90.7 ºF DB / 73.8 ºF WB*
Return Temperature:	*75 ºF DB / 62 ºF WB*

Static Pressure

External:	*2.50 in. wg.*	Economizer:	*0.21 in. wg.*
Evaporator:	*0.71 in. wg.*	Heating:	*0.43 in. wg.*
Filters Clean:	*0.72 in. wg.*	Cabinet:	*0.16 in. wg.*
Dirt Allowance	*0.5 in. wg.*	Re-Heat Coil:	*0.11 in. wg.*
		Total:	*5.35 in. wg.*

Cooling Section

	Gross	Net
Total Capacity:	*339.31*	*301.08 MBH*
Sensible Capacity:	*263.12*	*224.89 MBH*
Latent Capacity:	*76.19 MBH*	
Mixed Air Temp:	*76.94 ºF DB*	*63.63 ºF WB*
Entering Air Temp:	*76.94 ºF DB*	*63.63 ºF WB*
Lv Air Temp (Coil):	*51.46 ºF DB*	*51.08 ºF WB*
Lv Air Temp (Unit)	*55.07 ºF DB*	*52.62 ºF WB*
Digital Comp. Capacity Ratio:	*100%*	
Supply Air Fan:	*1 x 245 @ 13.97 BHP*	
SA Fan RPM / Width:	*1955 / 5.560"*	
Exhaust Air Fan:	*1 x RM220A @ 6.70 BHP*	
EA Fan RPM / Width:	*1770 / 4.930"*	
Evaporator Coil:	*19.9 ft² / 6 Rows / 12 FPI*	
Evaporator Face Velocity:	*488.4 fpm*	

Heating Section

PreHeat Type:	*Std (No Preheat)*
Heating Type:	*Nat. Gas Heat*
Heating CFM:	*8400*
Total Capacity:	*218.7 MBH*
OA Temp:	*16.4 ºF DB / 13.2 ºF WB*
RA Temp:	*75.0 ºF DB / 62.0 ºF WB*
Entering Air Temp:	*66.6 ºF DB / 57.1 ºF WB*
Leaving Air Temp:	*90.7 ºF DB / 65.6 ºF WB*
Input:	*270.0 MBH*
Heater Qty:	*1*
Consumption:	*270.0 MBH*
Total Turndown Ratio:	*9:1*

Re-Heat Coil:

Capacity:	*194 MBH*
LA DB / WB:	*70.00 ºF / 58.56 ºF*
RH:	*50%*

Rating Information

Cooling Capacity (MBH):	*322.0*
Cooling EER:	*11*
Cooling IEER:	*12*

Rated in accordance with AHRI 340/360

Application EER @ Op. Conditions: *8.0*

Electrical Data

Rating:	*460/3/60*	Minimum Circuit Amp:	*89*
Unit FLA:	*84*	Maximum Overcurrent:	*110*
SCCR:	*5 KAIC*		

	Qty	HP	VAC	Phase	RPM	FLA	RLA
Compressor 1:	1		460	3			23.1
Compressor 2:	1		460	3			23.1
Condenser Fans:	3	0.75	460	3	1080	1.8	
Supply Fan:	1	15.00	460	3	1760	21.0	
Exhaust Fan:	1	7.50	460	3	1760	11.0	
Combustion:	1	0.25	460	1	3210	0.9	

Cabinet Sound Power Levels*

Octave Bands:	**63**	**125**	**250**	**500**	**1000**	**2000**	**4000**	**8000**
Discharge LW(dB):	98	96	97	101	99	96	92	87
Return LW(dB):	95	93	92	87	83	82	78	70

**Sound power levels are given for informational purposes only. The sound levels are not guaranteed.*

RTU-04

24.5" STAR Plenum

2425 South Yukon Ave - Tulsa, Oklahoma 74107-2728 - Ph. (918) 583-2266 Fax (918) 583-6094
AAONEcat32 Ver. 4.317 (SN: 5593632-RL5UQX09)

JOB INFORMATION:

Job Name:	*WCC SD Jacobs*
Job Tag:	*RTU-4 RN30*
Rep Firm:	
Date:	*12/20/2021*

WHEEL SPECIFICATION:

Max RPM:	*2,000*
Diameter x Qty:	*24.5 in. x 1*
Width%:	*100*
Tip Speed:	*12,540 FPM*
Inertia:	*10 WR²*

OPERATING CONDITIONS:

Air Flow:	*9,700 CFM*
Static Pressure:	*5.35 in. Wg.*
Plenum DP:	*0.00 in. Wg.*
Inlet Grill DP:	*0.00 in. Wg.*
TSP:	*5.35 in. Wg.*
Site Altitude:	*0.00 Ft*
TSP @ Sea Level:	*5.35 in. Wg.*

MOTOR SELECTION:

Rated HP / Bypass:	*15 / No*
Frame Size:	*254T*
Nominal RPM:	*1760*
VAC/PH/HZ:	*460/3/60*
Efficiency	*Premium / 0.93*
Enclosure Type:	*ODP*
Max Inertial Load:	*149 WR²*

FAN PERFORMANCE:

RPM:	*1955*
BHP:	*13.97*
Efficiency:	*58.5%*
In/Out Velocity:	*2966/3266 FPM*
Plenum Out Velocity:	*162 FPM*

FAN SOUND POWER (Inlet/Outlet):

Octave Band: **(Re 10^-12 watts)**

1	2	3	4	5	6	7	8
95	*95*	*94*	*94*	*92*	*91*	*89*	*87*
97	*95*	*95*	*102*	*102*	*99*	*95*	*90*

SOUND POWER A-Weighted: 99 / 105 dB

Max Duct SP with Blocked Airway: 6.6 in. Wg. @ 1955 rpm

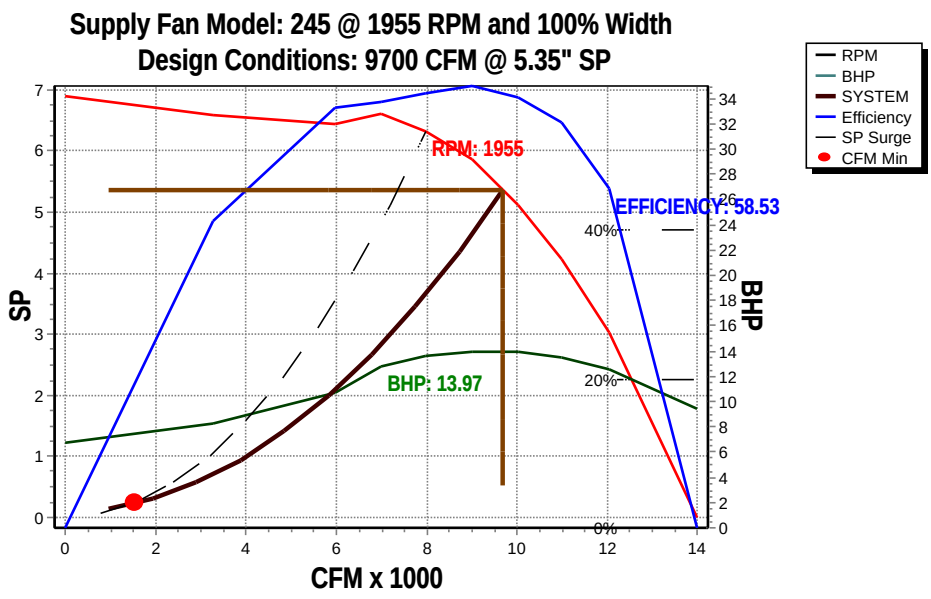

RTU-04

22.0" STAR Plenum

2425 South Yukon Ave - Tulsa, Oklahoma 74107-2728 - Ph. (918) 583-2266 Fax (918) 583-6094
AAONEcat32 Ver. 4.317 (SN: 5593632-RL5UQX09)

JOB INFORMATION:

Job Name:	*WCC SD Jacobs*
Job Tag:	*RTU-4 RN30*
Rep Firm:	
Date:	*12/20/2021*

WHEEL SPECIFICATION:

Max RPM:	*2,200*
Diameter x Qty:	*22.0 in. x 1*
CFM:	*8500*
Tip Speed:	*10,194 FPM*
Inertia:	*5 WR²*

OPERATING CONDITIONS:

Air Flow:	*8,500 CFM*
Static Pressure:	*0.50 in. Wg.*
Relief Dampers DP:	*0.79 in. Wg.*
TSP:	*1.29 in. Wg.*
Site Altitude:	*0.00 Ft*
TSP @ Sea Level:	*1.29 in. Wg.*

MOTOR SELECTION:

Rated HP / Bypass:	*7.5 / No*
Frame Size:	*213T*
Nominal RPM:	*1760*
VAC/PH/HZ:	*460/3/60*
Efficiency	*Premium / 0.91*
Enclosure Type:	*ODP*
Max Inertial Load:	*64 WR²*

FAN PERFORMANCE:

RPM:	*1770*
BHP:	*6.70*
Efficiency:	*25.7%*
In/Out Velocity:	*2599/2862 FPM*
Plenum Out Velocity:	*142 FPM*

FAN SOUND POWER (Inlet/Outlet):

Octave Band: **(Re 10^-12 watts)**

1	2	3	4	5	6	7	8
94	*93*	*96*	*94*	*86*	*84*	*81*	*73*
94	*93*	*96*	*94*	*86*	*84*	*81*	*73*

SOUND POWER A-Weighted: 96 / 96 dB

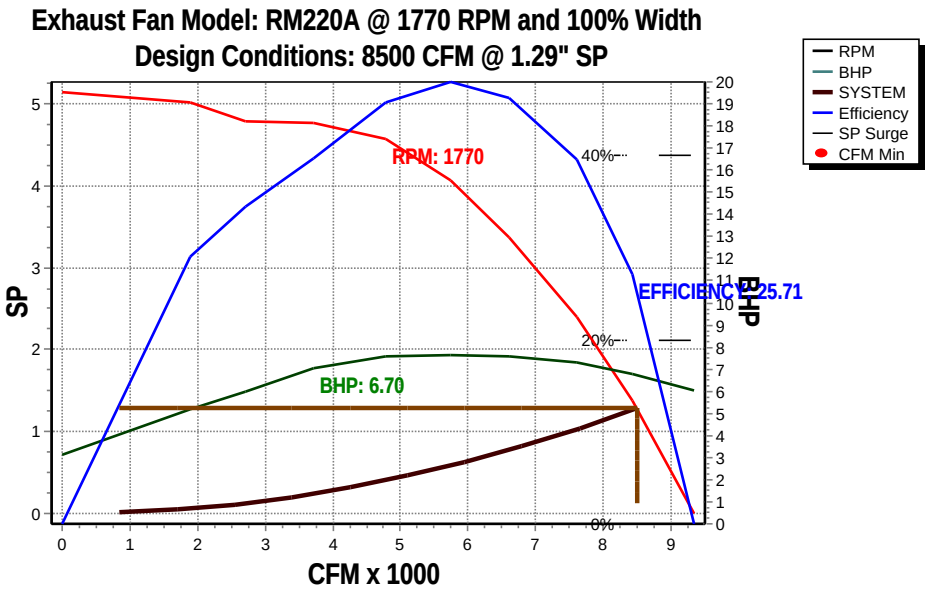

RTU-04

Unit Submittal

2425 South Yukon Ave - Tulsa, Oklahoma 74107-2728 - Ph. (918) 583-2266 Fax (918) 583-6094
AAONEcat32 Ver. 4.317 (SN: 5593632-RL5UQX09)

1A 1B 1C 1D 2 3 4 5A 5B 5C 6A 6B 6C 7 8 9 10 11 12 13 14A 14B 15 16 17 18 19 20 21 22 23

RN-030-3-A-EB19-34B:BEDG-D0K-DDL-AHC-EJQB5B3-00-00A0000VB

Tag: RTU-4 RN30

Job Name: *WCC SD Jacobs* **Unit Submittal For:**
Job Number: *WCC SD Jacobs* **Unit Submittal Date:** *December 20, 2021*

	Base Option	Description
R	Series	Roof Top Unit
N	Generation	Ninth Generation
030	Unit Size	Thirty
3	Voltage	460V/3Ø/60Hz
A	Interior Protection	Interior Corrosion Protection
E	Refrigerant Style	R-410A Variable Capacity Scroll Compressor (VCC)
B	Unit Configuration	Air-Cooled Cond. + 6 Row Evap. Coil
1	Coil Coating	Polymer E-Coated Evap. and Cond. Coils
9	Cooling/Heat Pump Staging	Modulating - 1 VCC + 1 On/Off Comp.
3	Heating Type	Natural Gas Stainless Steel
4	Heating Designation	Heat 4 - 270 MBtuh
B	Heating Staging	High Turndown Modulating Gas - Temperature Control

	Feature Option	Description
B	**1A.** RA/OA Section	Economizer + Power Exhaust
E	**1B.** RA/EA Blower Configuration	1 Blower + Premium Efficiency Motor + 1 VFD
D	**1C.** RA/EA Blower	22" Backward Curved Plenum
G	**1D.** RA/EA Blower Motor	7.5 hp - 1760 rpm
D	**2.** OA Control	Fully Modulating Actuator - Enthalpy Limit
0	**3.** Heat Options	Standard
K	**4.** Maintenance Options	115V Convenience Outlet - Factory Wired + Blower Aux. Contact - LVTB + Remote Start/Stop Terminals - LVTB
D	**5A.** SA Blower Configuration	1 Blower + Premium Efficiency Motor + 1 VFD
D	**5B.** SA Blower	24" Direct Drive Backward Curved Plenum
L	**5C.** SA Motor	15 hp - 1760 rpm
A	**6A.** Pre Filter Type	2" Pleated Pre Filter - 30% Eff
H	**6B.** Unit Filter Type	4" Pleated - 95% Eff - MERV 14
C	**6C.** Filter Options	Clogged Filter Switch + Magnehelic Gauge
E	**7.** Refrigeration Control	Freeze Stat
J	**8.** Refrigeration Options	HGB Lead + HGB Lag + MHGR
Q	**9.** Refrigeration Accessories	VFD Condenser Fan - Head Pressure Control + Sight Glass + Compressor Isolation Valves
B	**10.** Power Options	Non-fused Disconnect Power Switch - 150 Amps
5	**11.** Safety Options	RA and SA Smoke Detector + Remote Safety Shutdown Terminals + High Condensate Level Switch
B	**12.** Controls	Phase & Brown Out Protection
3	**13.** Special Controls	VAV Single Zone Unit Controller - VAV Cool + VAV Heat
0	**14A.** Outside Air Configuration	Standard - None
0	**14B.** Preheat Sizing	Standard - None
0	**15.** Glycol Percent	Water or No WSHP
0	**16.** Interior Cabinet Options	Standard - Double Wall + R-13 Foam Insulation + Stainless Steel Drain Pan
A	**17.** Exterior Cabinet Options	Base Insulation
0	**18.** Electrical Rating	Standard - 5 KAIC
0	**19.** Code Options	Standard - ETL U.S.A. Listing
0	**20.** Crating	Standard
0	**21.** Water-Cooled Cond.	Standard - None
V	**22.** Control Vendors	VCC-X Controls + Integrated BACnet MSTP
B	**23.** Type	Standard - Includes AAON Gray Paint

RTU-04

VCCX Components

2425 South Yukon Ave - Tulsa, Oklahoma 74107-2728 - Ph. (918) 583-2266 Fax (918) 583-6094
AAONEcat32 Ver. 4.317 (SN: 5593632-RL5UQX09)

1A 1B 1C 1D 2 3 4 5A 5B 5C 6A 6B 6C 7 8 9 10 11 12 13 14A 14B 15 16 17 18 19 20 21 22 23

RN-030-3-A-EB19-34B:BEDG-D0K-DDL-AHC-EJQB5B3-00-00A0000VB

Tag: RTU-4 RN30

Job Name: ***WCC SD Jacobs*** **VCCX For:**

Job Number: ***WCC SD Jacobs*** **VCCX Date:** ***December 20, 2021***

Hardware Included For VCCX Controller

Part #	Included Parts	Assigned Channel	BACnet Point
ASM01698	VCCX2 CONTROLLER		
ASM01692	OSA Temp/Hum Sensor	EBUS2 communicating sensor	AI:16,AI:17,AI:18,AI:19
ASM01820	Space Digital Temp/Hum Sensor	EBUS3 communicating sensor	AI:12,AI:13
R82890	Supply Temp Sensor - Field Installed	VCCX control point AI 3	AI:9
R37030	Building Pressure Sensor	VCCX control point AI 5	AI:23
	Supply Fan Control Signal 0-10VDC	VCCX control point AO 1	AI:22
	Economizer	VCCX control point AO 2	AI:30
	Building Pressure Control Signal	VCCX control point AO 4	AI:24
R62330	Proof of Air Flow	VCCX control point BI 1	BI:6, BI:24
R64580	Dirty Filter Sensor	VCCX control point BI 2	BI:25
	Safety Shut Down	VCCX control point BI 8	BI:26
	Supply Fan	Configured Relay Point	BI:47
	Exhaust Fan	Configured Relay Point	BI:48
ASM02201	DIGITAL REFRIGERATION MODULE		
R42680	Comp Discharge Temp A	RSMD point TEMP1	AI:66
V38391	Suction Pressure Sensor A	RSMD point SP-1	AI:48
V38410	Discharge Pressure Sensor A	RSMD point HP-1	AI:50
V38410	Discharge Pressure Sensor B	RSMD point HP-2	AI:75
	Modulated Condenser Signal AB	RSMD point AO1	AI:46
	Comp Status Input A	RSMD point BIN1	BI:77
	Comp Status Input B	RSMD point BIN2	BI:78
	Emergency Shutdown	RSMD point BIN4	BI:83
	Comp Unload Signal A	RSMD point T1	AI:44
	Comp Enable A	RSMD Fixed Relay point	BI:84
	Comp Enable B	RSMD Fixed Relay point	BI:85
ASM01670	MODULATING HOT GAS REHEAT MODULE		
	Reheat HGR Valve	MHGRV-X	AI:42
ASM01695	MODULATING GAS MODULE		
	Gas Valve Signal 1B	MODGAS-XWR Gas Valve 2	
	Gas Valve Signal 1A	MODGAS-XWR Gas Valve 1	
	Proof of Ignition 1B	MODGAS-XWR BI4	
	Proof of Ignition 1A	MODGAS-XWR BI3	
	Mod Heat Stage 2 (IGN 1B)	MODGAS-XWR Heat 2 Relay	
	Mod Heat Stage 1 (IGN 1A)	MODGAS-XWR Heat 1 Relay	
	Low Speed Enable	MODGAS-XWR Low Speed Relay	

RTU-04

RN SERIES
C - CABINET WITH ECONOMIZER ~ 16-30 TON AND POWER EXHAUST

CLEARANCES

LOCATION	• UNIT SIZE • 16 - 30 TON
OUTSIDE AIR (BACK)	48
CONTROLS SIDE (FRONT)	48
LEFT SIDE	6
RIGHT SIDE	60
TOP	UNOBSTRUCTED

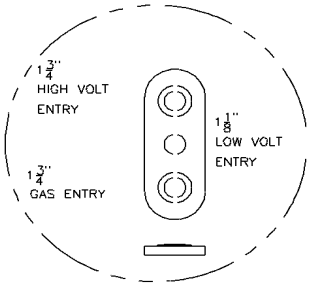

DETAIL A

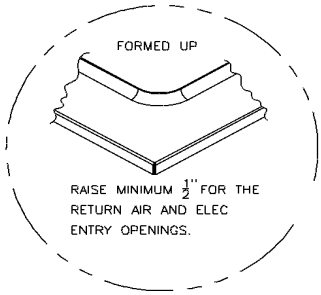

DETAIL B

NUMBER OF CONDENSER FANS

16,18 & 20 TON - 2 FANS

25 & 30 TON - 3 FANS

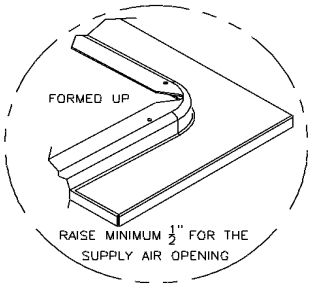

DETAIL C

TOP VIEW

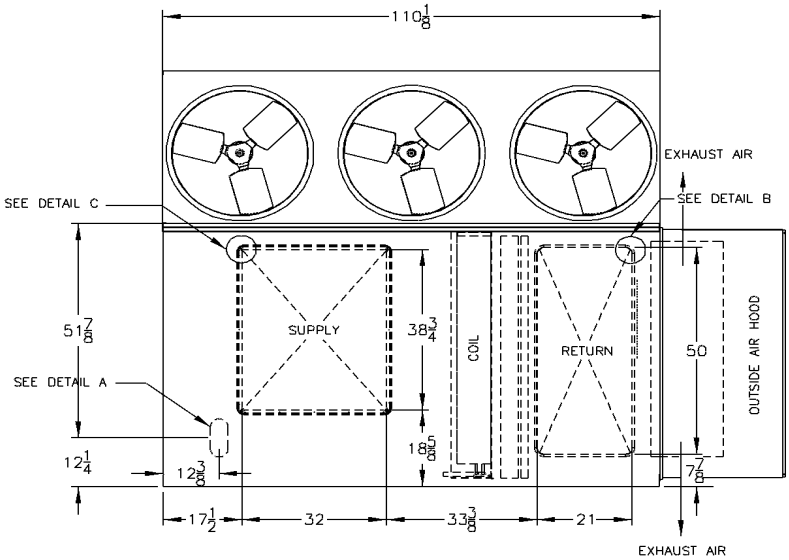

FRONT VIEW

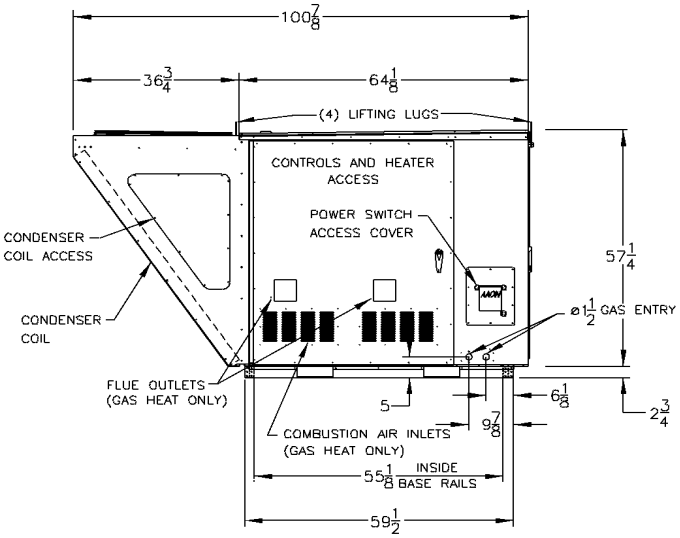

RIGHT SIDE VIEW

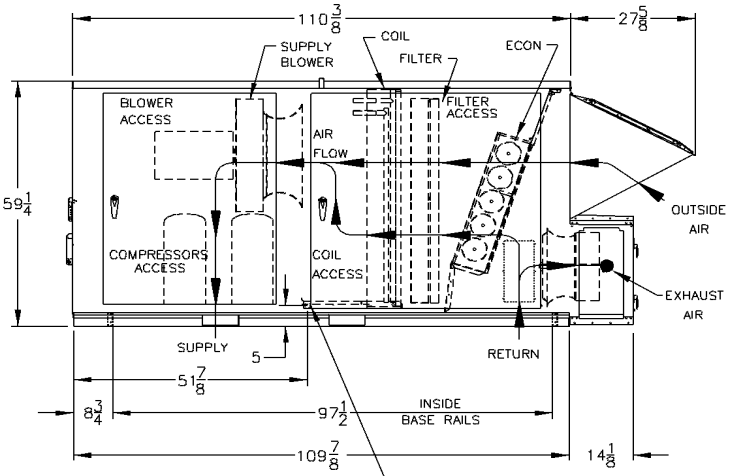

1" MPT STAINLESS CONDENSATE CONNECTION. 'P' TRAP FURNISHED BY MANUFACTURER FOR DRAIN CONNECTION.

RNC-00003 REV:B 08/23/10 JWC

NOTE: ALL DIMENSIONS ARE IN INCHES

RTU-04

RNC CABINET
AIR COOLED CONDENSING UNIT WITH POWER EXHAUST

AAON®

RN-030-3-A-EB19-34B:BEDG-D0K-DDL-AHC-EJQB5B3-00-00A0000VB

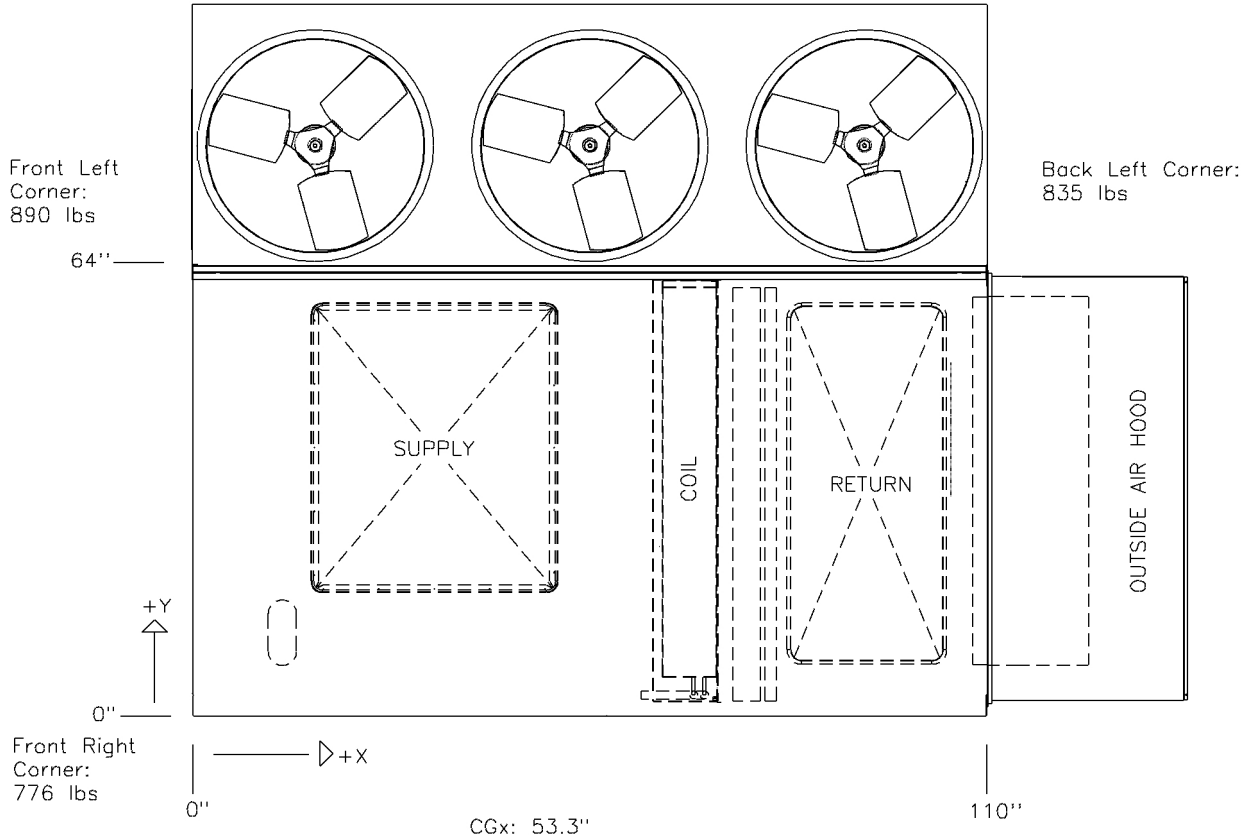

Disclaimer:
This weight estimate does not account for any SPAs.

Job Name:	
Tag#	FCU-1,6

Submittal Data Sheet

FTK24AXVJU / RK24AXVJU

2-Ton Wall Mounted Cooling Only System

Complete warranty details available from your local dealer or at www.daikincomfort.com. To receive the 12-Year Parts Limited Warranty, online registration must be completed within 60 days of installation. Online registration is not required in California or Quebec. If product is installed in a commercial application, limited warranty period is 5 years.

Efficiency

Cooling	
SEER	19
EER	12.2

Performance

Cooling (Btu/hr)	
Rated (Min/Max)	21,200 (5,500 / 24,000)
Sensible @ AHRI	15,670
Moisture Removal gal/h	0.67
Standard Operating Range	50°F – 115°F
Extended Operating Range*	-4°F – 115°F

Rated Cooling Conditions: Indoor: 80°F DB/67°F WB
Outdoor: 95°F DB/75°F WB

***With field settings and wind baffle**

Indoor Specifications

	Cooling	
Airflow Rate (cfm)	H	M
	716	605
	L	SL
	467	395
Sound (dBA) H / M / L / SL	53 / 45 / 39 / 34	
Dimensions (H × W × D) (in)	11-11/16 × 39-1/2 × 11-1/3	
Weight (Lbs)	31	

Electrical

	208/60/1	230/60/1
System MCA	13.4	13.4
System MFA	20.0	20.0
Compressor RLA	13.0	13.0
Outdoor fan motor FLA	1.0	1.0
Outdoor fan motor W	128	128
Indoor fan motor FLA	.50	.50
Indoor fan motor W	35	35

MFA: Max. fuse amps **MCA**: Min. circuit amps (A) **FLA**: Full load amps (A)
RLA: Rated load amps (A) **W**: Fan motor rated output (W)

Outdoor Specifications

Compressor	Hermetically Sealed Swing Type	
Refrigerant	R-410A	
Factory Charge (Lbs)	3.86	
Refrigerant Oil	PVE (FVC50K)	
Airflow Rate (cfm)	Cooling	
	H	1,908
Sound Pressure Level (dBA)	55	
Dimensions (H × W × D) (in)	27-13/32 × 36-5/8 × 13-13/16	
Weight (Lbs)	106	

Piping

Liquid (in)	1/4
Gas (in)	5/8
Drain (in)	3/4
Max. Interunit Piping Length (ft)	98.4
Max. Interunit Height Difference (ft)	65.625
Chargeless (ft)	32.8
Additional Charge of Refrigerant (oz/ft)	.21

FCU-1,6

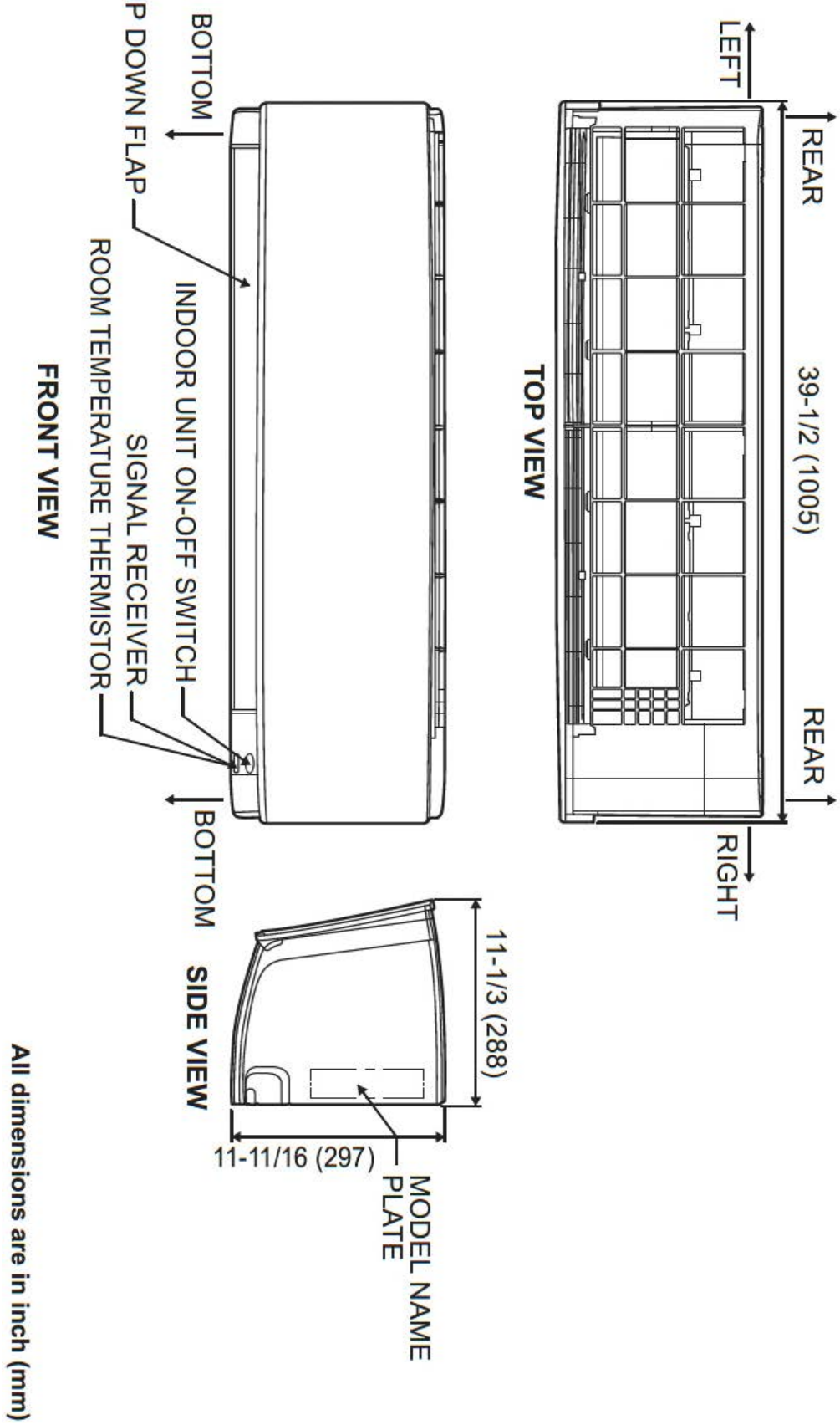

All dimensions are in inch (mm)

FCU-1,6

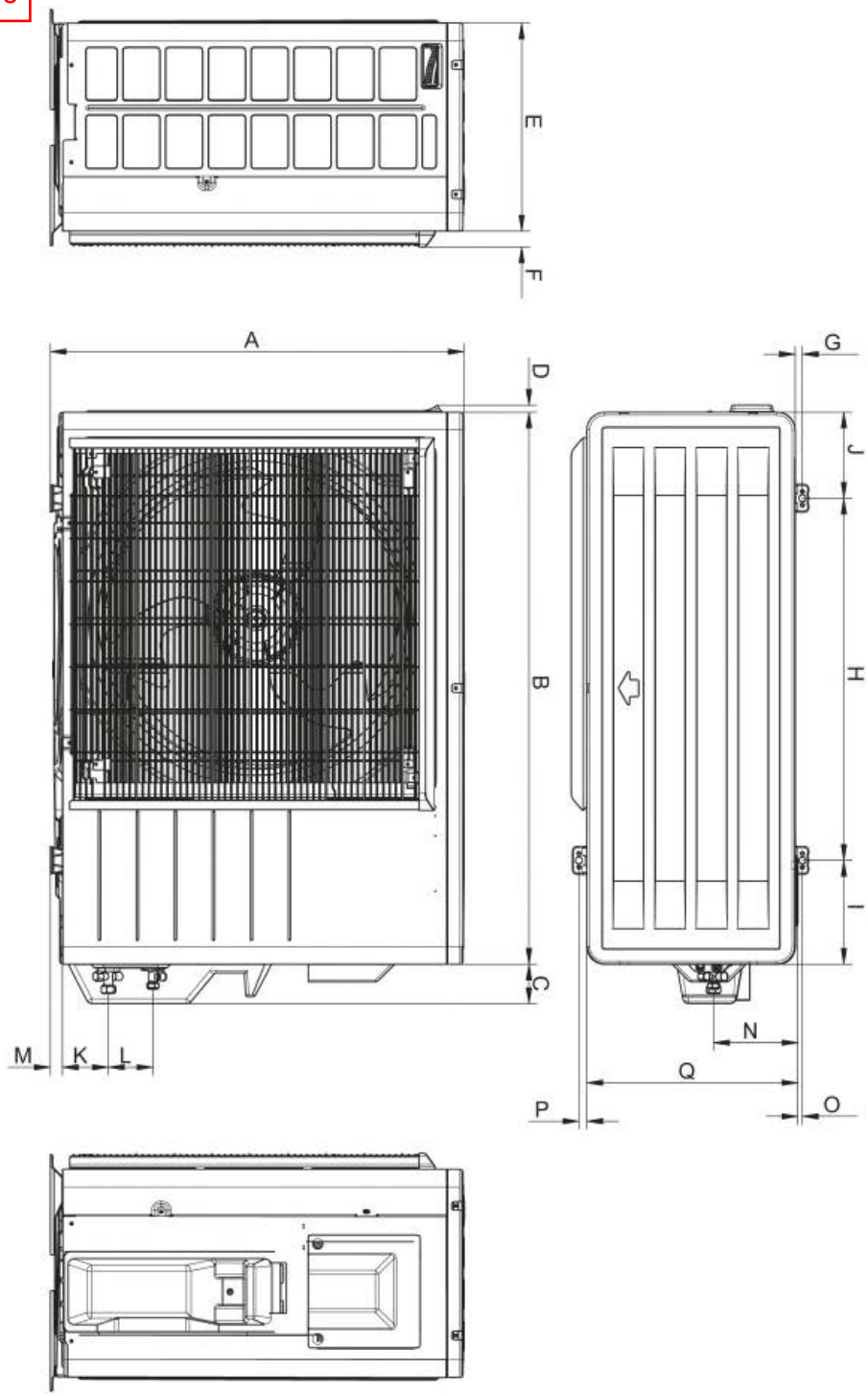

Dimension / Model	A	B	C	D	E	F	G	H	I	J	K	L	M	N	O	P	Q
18/24	27-13/32 (696)	36-5/8 (930)	2-19/32 (66)	15/32 (12)	13-13/16 (351)	1-1/16 (27)	15/32 (12)	24 (610)	6-7/8 (175)	5-23/32 (145)	3-1/32 (77)	2-31/32 (75)	13/16 (21)	5-19/32 (142)	5/16 (8)	17/32 (13)	13-31/32 (355)

All dimensions are in inch (mm)

Optional Accessories

FCU-1,6

Indoor Unit		
Included	**Part Number**	**Description**
	BRP072A43	Wireless Interface Adaptor
	AZAI6WSCDKB	DKN Residential Cloud Wi-Fi Adaptor for Single- and Multi-Zone System (S21)
	BRC944B2-A08	Wired Remote Controller kit
	BRCW901A08	Wired Remote Controller Cable – 25ft (Included in above kit)
	BRCW901A03	Wired Remote Controller Cable – 10ft
	DACA-CP1-1	Inline Condensate Pump (Fits inside all Daikin wall & floor mount units)
	DACA-CP4-1	External Condensate Pump

Outdoor Unit		
Included	**Part Number**	**Description**
	DACA-WB-1	Powder-Coated Wall-Mounted Bracket
	KPW063B4E	Air Adjustment Grille

Job Name:	
Tag#	FCU-2,5

Submittal Data Sheet

FDMQ24RVJU / RXL24UMVJUA

2.0-Ton Ducted Concealed Heat Pump System

* 12 YEAR PARTS LIMITED WARRANTY

Complete warranty details available from your local dealer or at www.daikincomfort.com. To receive the 12-Year Parts Limited Warranty, online registration must be completed within 60 days of installation. Online registration is not required in California or Quebec. *If product is installed in a commercial application, limited warranty period is 5 years.*

Indoor Specifications

	Cooling		Heating	
	H	M	H	M
Airflow Rate (cfm)	798	678	798	678
	L		L	
	558		558	
Sound (dBA)	40		40	
Dimensions (H × W × D) (in)	9-5/8 × 39-3/8 × 31-1/2			
Air Inlet (H x W) (in)	8-3/16 x 37-1/2			
Weight (Lbs)	82			

Outdoor Specifications

Compressor	Hermetically Sealed Swing Type	
Refrigerant	R-410A	
Factory Charge (Lbs)	3.20	
Refrigerant Oil	PVE (FVC50K)	
Airflow Rate (cfm)	Cooling	Heating
	2,418	2,361
Sound Pressure Level (dBA)	55 / 55	
Dimensions (H × W × D) (in)	28-15/16 × 34-1/4 × 12-5/8	
Weight (Lbs)	130	

Efficiency

Cooling		Heating	
SEER	18.6	HSPF	10.0
EER	12.5	COP	3.8

Performance

Cooling (Btu/hr)	
Rated (Min/Max)	21,200 (9,000 / 24,000)
Sensible @ AHRI	16,730
Standard Operating Range	50°F – 115°F
Extended Operating Range*	-4°F – 115°F

Rated Cooling Conditions: Indoor: 80°F DB/67°F WB
Outdoor: 95°F DB/75°F WB

***With field settings and wind baffle**

Heating (Btu/hr)	
1:@ 47° Rated (Min/Max)	24,000 (9,000 / 27,600)
2: @ 17° Rated	16,000
3: @ 5° Max: Capacity / COP	23,000 / 1.8
Operating Range	-13°F – 65°F

1: Rated Heating Conditions: Indoor: 70°F DB/60°F WB
Outdoor: 47°F DB/43°F WB

2: Rated Heating Conditions: Indoor: 70°F DB/60°F WB
Outdoor: 17°F DB/15°F WB

3: Heating Conditions: Indoor: 70°F DB/60°F WB
Outdoor: 5°F DB/5°F WB

Electrical

	208/60/1	230/60/1
System MCA	19.8	19.8
System MFA	20	20
Compressor RLA	18.25	18.25
Outdoor fan motor FLA	.47	.47
Outdoor fan motor W	76	76
Indoor fan motor FLA	1.54	1.54
Indoor fan motor W	230	230

MFA: Max. fuse amps **MCA**: Min. circuit amps (A) **FLA**: Full load amps (A)
RLA: Rated load amps (A) **W**: Fan motor rated output (W)

Piping

Liquid (in)	1/4
Gas (in)	5/8
Drain (in)	1
Max. Interunit Piping Length (ft)	98.5
Max. Interunit Height Difference (ft)	65.6
Chargeless (ft)	32.8
Additional Charge of Refrigerant (oz/ft)	.21

FCU-2,5

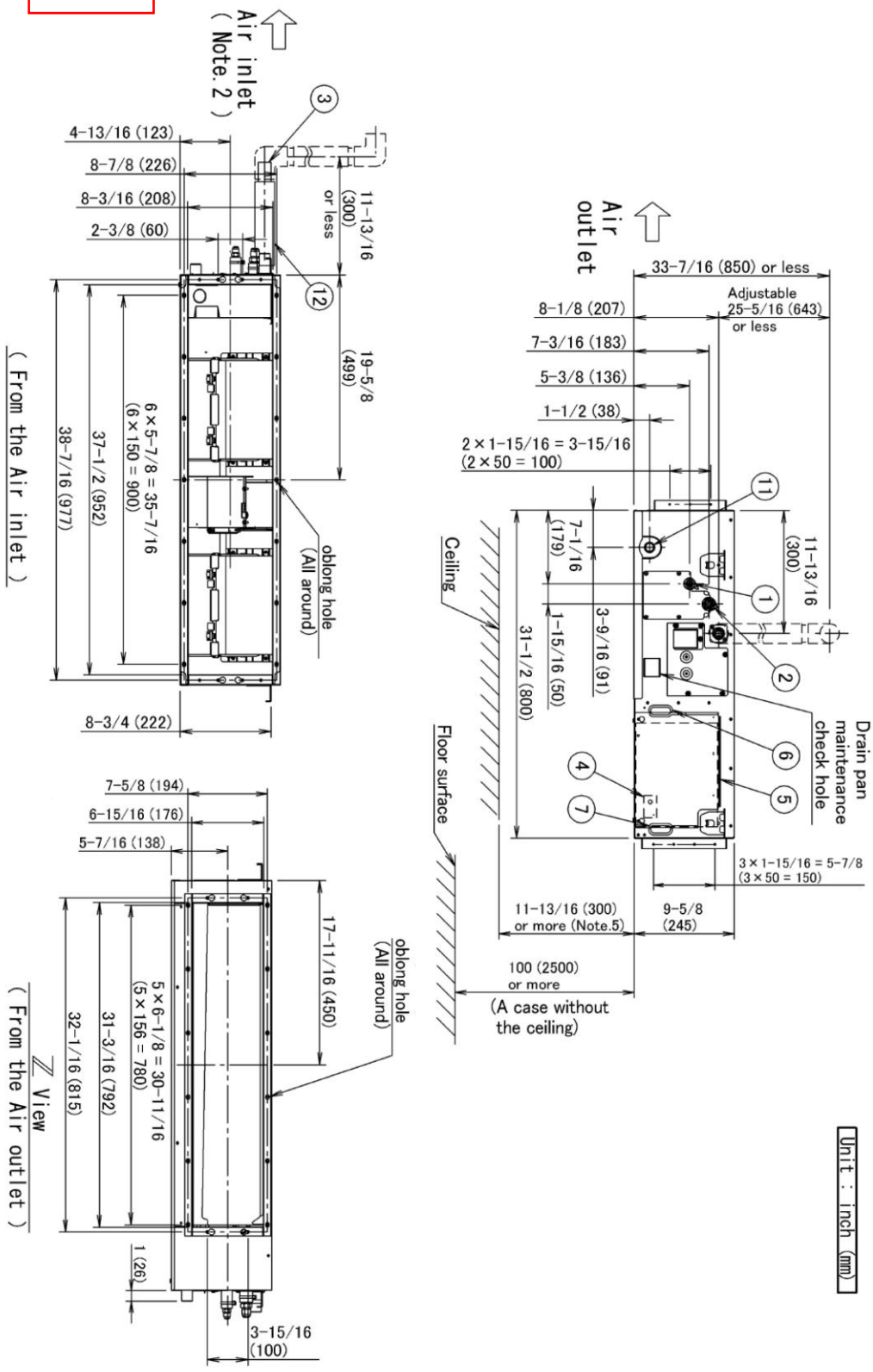
Air inlet
(Note. 2)
Air outlet
4-13/16 (123)
8-7/8 (226)
8-3/16 (208)
2-3/8 (60)
11-13/16 (300) or less
19-5/8 (499)
6×5-7/8 = 35-7/16 (6×150 = 900)
37-1/2 (952)
38-7/16 (977)
(From the Air inlet)
oblong hole (All around)
8-3/4 (222)
33-7/16 (850) or less
Adjustable 25-5/16 (643) or less
8-1/8 (207)
7-3/16 (183)
5-3/8 (136)
1-1/2 (38)
2×1-15/16 = 3-15/16 (2×50 = 100)
7-1/16 (179)
1-15/16 (50)
3-9/16 (91)
31-1/2 (800)
11-13/16 (300)
Ceiling
Floor surface
Drain pan maintenance check hole
3×1-15/16 = 5-7/8 (3×50 = 150)
11-13/16 (300) or more (Note.5)
9-5/8 (245)
100 (2500) or more
(A case without the ceiling)
7-5/8 (194)
6-15/16 (176)
5-7/16 (138)
17-11/16 (450)
5×6-1/8 = 30-11/16 (5×156 = 780)
31-3/16 (792)
32-1/16 (815)
Z View
(From the Air outlet)
1 (26)
3-15/16 (100)
Unit : inch (mm)

FCU-2,5

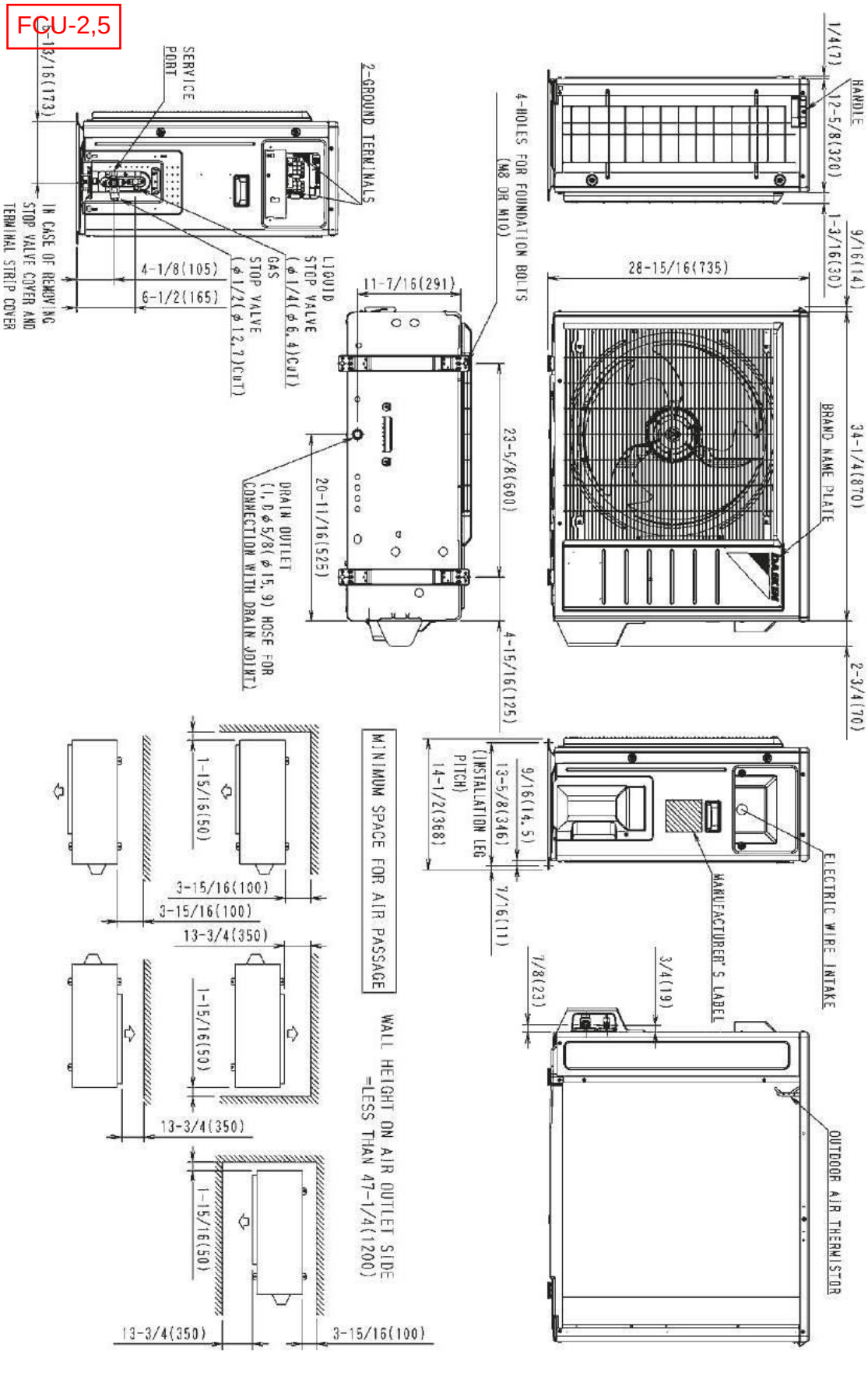
HANDLE
1/4(7)
12-5/8(320)
1-3/16(30)
9/16(14)
28-15/16(735)
34-1/4(870)
2-3/4(70)
BRAND NAME PLATE
4-HOLES FOR FOUNDATION BOLTS
(M8 OR M10)
11-7/16(291)
23-5/8(600)
4-15/16(125)
2-GROUND TERMINALS
LIQUID
STOP VALVE
(φ1/4(φ6.4)CUT)
GAS
STOP VALVE
(φ1/2(φ12.7)CUT)
SERVICE
PORT
6-13/16(173)
4-1/8(105)
6-1/2(165)
IN CASE OF REMOVING
STOP VALVE COVER AND
TERMINAL STRIP COVER
DRAIN OUTLET
(I.D.φ5/8(φ15.9) HOSE FOR
CONNECTION WITH DRAIN JOINT)
20-11/16(525)
ELECTRIC WIRE INTAKE
MANUFACTURER'S LABEL
9/16(14.5)
13-5/8(346)
(INSTALLATION LEG
PITCH)
14-1/2(368)
7/16(11)
3/4(19)
7/8(23)
OUTDOOR AIR THERMISTOR
MINIMUM SPACE FOR AIR PASSAGE
WALL HEIGHT ON AIR OUTLET SIDE
-LESS THAN 47-1/4(1200)
1-15/16(50)
3-15/16(100)
3-15/16(100)
13-3/4(350)
1-15/16(50)
13-3/4(350)
1-15/16(50)
13-3/4(350)
3-15/16(100)
3D123362

Optional Accessories

FCU-2,5

Indoor Unit – One Controller required		
Included	**Part Number**	**Description**
	BRC1E73	Wired Remote Controller
	BRC082A43	Wireless Remote Controller
	KRCS01-4B	Remote Sensor
	DACA-CP2-1	Maxi Orange Condensate Pump (up to 49 ft head)
	DACA-CP3-1	Mini Condensate Pump (up to 33 ft head)
	KRP1C74	Wiring Adaptor
	KRP4A98	Mounting Plate
	DFBS39A13	MERV 13 Filter Kit
	AZAI6WSCDKA	DKN Cloud Wi-Fi Adaptor
	KRP4A71	Group Control Adaptor PCB
Outdoor Unit		
Included	**Part Number**	**Description**
	DACA-WB-1	Powder-Coated Wall-Mounted Bracket
	KEH063A4E	Drain Pan Heater
	KKP937A4	Drain Plug for OD Unit
	KPW063B4	Low Ambient Wind Baffle / Air Adjustment Grille (15/18 /24MBH)
	KKG063A42	Back Protection Wire Net (15/18/24MBH)
	KPS063A41	Snow hood (intake side plate) (15/18/24MBH)
	KPS063A44	Snow hood (intake rear plate) (15/18/24MBH)
	KPS063A47	Snow hood (outlet) (15/18/24MBH)

Standard Equipment

Part Number	Description
2261089	Drain Pump
2261096	Float Switch Assy.

External Static Pressure / Airflow Chart

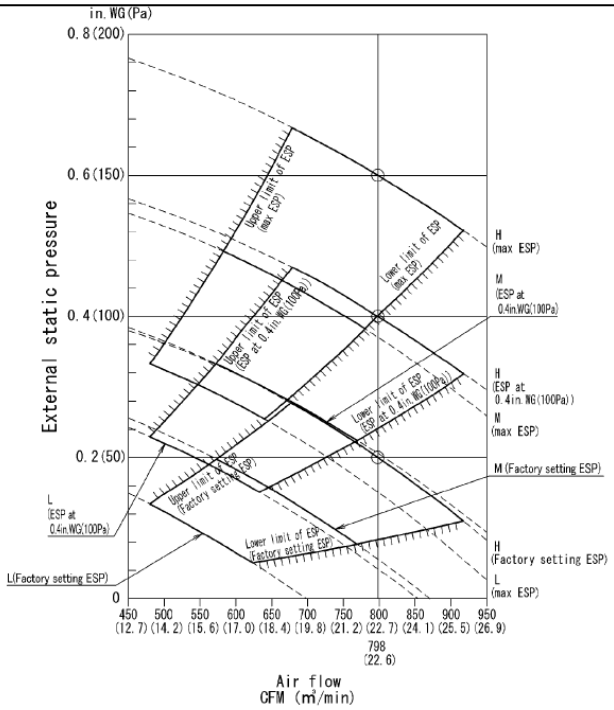

Job Name:	
Tag#	FCU-3,4,7

Submittal Data Sheet

FDMQ09RVJU / RX09RMVJU9

0.75-Ton Ducted Concealed Heat Pump System

Complete warranty details available from your local dealer or at www.daikincomfort.com. To receive the 12-Year Parts Limited Warranty, online registration must be completed within 60 days of installation. Online registration is not required in California or Quebec. *If product is installed in a commercial application, limited warranty period is 5 years.*

Indoor Specifications

	Cooling		Heating	
	H	M	H	M
Airflow Rate (cfm)	343	290	343	290
	L		L	
	240		240	
Sound (dBA)	32		32	
Dimensions (H × W × D) (in)	9-5/8 × 27-9/16 × 31-1/2			
Airflow Inlet (H x W) (in)	8-3/16 x 25-3/4			
Weight (Lbs)	64			

Outdoor Specifications

Compressor	Hermetically Sealed Swing Type	
Refrigerant	R-410A	
Factory Charge (Lbs)	2.09	
Refrigerant Oil	PVE (FVC50K)	
Airflow Rate (cfm)	Cooling	Heating
	985	1,105
Sound Pressure Level (dBA)	46 / 50	
Dimensions (H × W × D) (in)	21-5/8 × 26-9/16 × 11-3/16	
Weight (Lbs)	60	

Efficiency

Cooling		Heating	
SEER	17.8	HSPF	10.3
EER	11.1	COP	4.1

Performance

Cooling (Btu/hr)	
Rated (Min/Max)	9,000 (3,900 / 10,700)
Sensible @ AHRI	7,610
Standard Operating Range	50°F – 115°F
Extended Operating Range*	-4°F – 115°F

Rated Cooling Conditions: Indoor: 80°F DB/67°F WB
Outdoor: 95°F DB/75°F WB

***With field settings and wind baffle**

Heating (Btu/hr)	
1: @ 47° Rated (Min/Max)	10,900 (3,900 / 14,000)
2: @ 17° Rated	6,800
3: @ 5°	4,870
Operating Range	5°F – 65°F

1: Rated Heating Conditions: Indoor: 70°F DB/60°F WB
Outdoor: 47°F DB/43°F WB

2: Rated Heating Conditions: Indoor: 70°F DB/60°F WB
Outdoor: 17°F DB/15°F WB

3: Heating Conditions: Indoor: 70°F DB/60°F WB
Outdoor: 5°F DB/5°F WB

Electrical

	208/60/1	230/60/1
System MCA	9	9
System MFA	15	15
Compressor RLA	7.5	7.5
Outdoor fan motor FLA	.13	.13
Outdoor fan motor W	39	39
Indoor fan motor FLA	.63	.63
Indoor fan motor W	130	130

MFA: Max. fuse amps **MCA**: Min. circuit amps (A) **FLA**: Full load amps (A)
RLA: Rated load amps (A) **W**: Fan motor rated output (W)

Piping

Liquid (in)	1/4
Gas (in)	3/8
Drain (in)	1
Max. Interunit Piping Length (ft)	65.6
Max. Interunit Height Difference (ft)	49.2
Chargeless (ft)	32.8
Additional Charge of Refrigerant (oz/ft)	.21

FCU-3,4,7

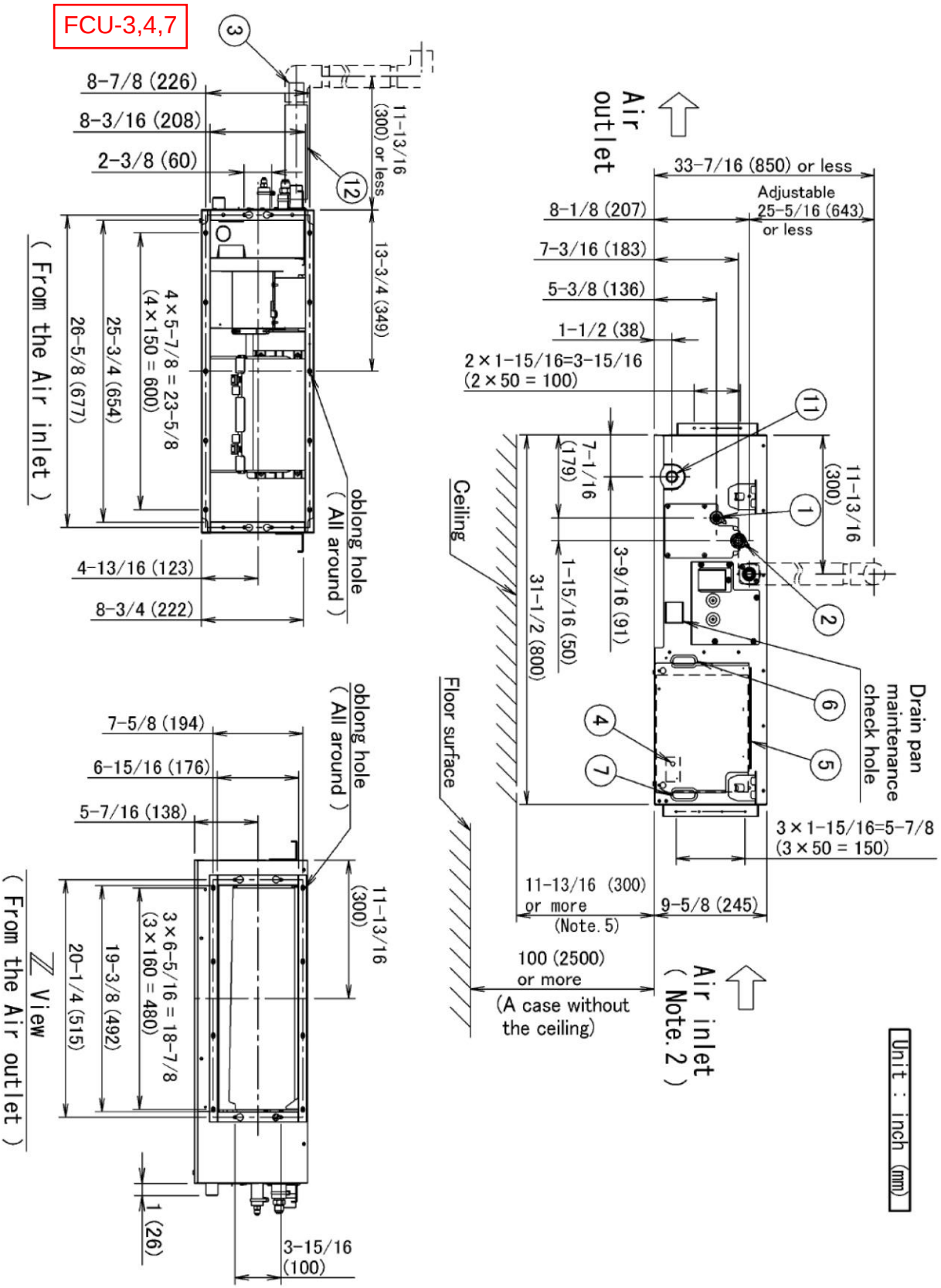
Air outlet
33-7/16 (850) or less
Adjustable 25-5/16 (643) or less
8-1/8 (207)
7-3/16 (183)
5-3/8 (136)
1-1/2 (38)
2×1-15/16=3-15/16 (2×50 = 100)
11-13/16 (300)
7-1/16 (179)
3-9/16 (91)
1-15/16 (50)
31-1/2 (800)
Ceiling
Floor surface
Drain pan maintenance check hole
3×1-15/16=5-7/8 (3×50 = 150)
11-13/16 (300) or more (Note. 5)
9-5/8 (245)
100 (2500) or more
(A case without the ceiling)
Air inlet (Note. 2)
Unit : inch (mm)
8-7/8 (226)
8-3/16 (208)
2-3/8 (60)
11-13/16 (300) or less
13-3/4 (349)
4×5-7/8 = 23-5/8 (4×150 = 600)
25-3/4 (654)
26-5/8 (677)
(From the Air inlet)
oblong hole (All around)
4-13/16 (123)
8-3/4 (222)
7-5/8 (194)
6-15/16 (176)
5-7/16 (138)
3×6-5/16 = 18-7/8 (3×160 = 480)
19-3/8 (492)
20-1/4 (515)
Z View (From the Air outlet)
1 (26)
3-15/16 (100)

FCU-3,4,7

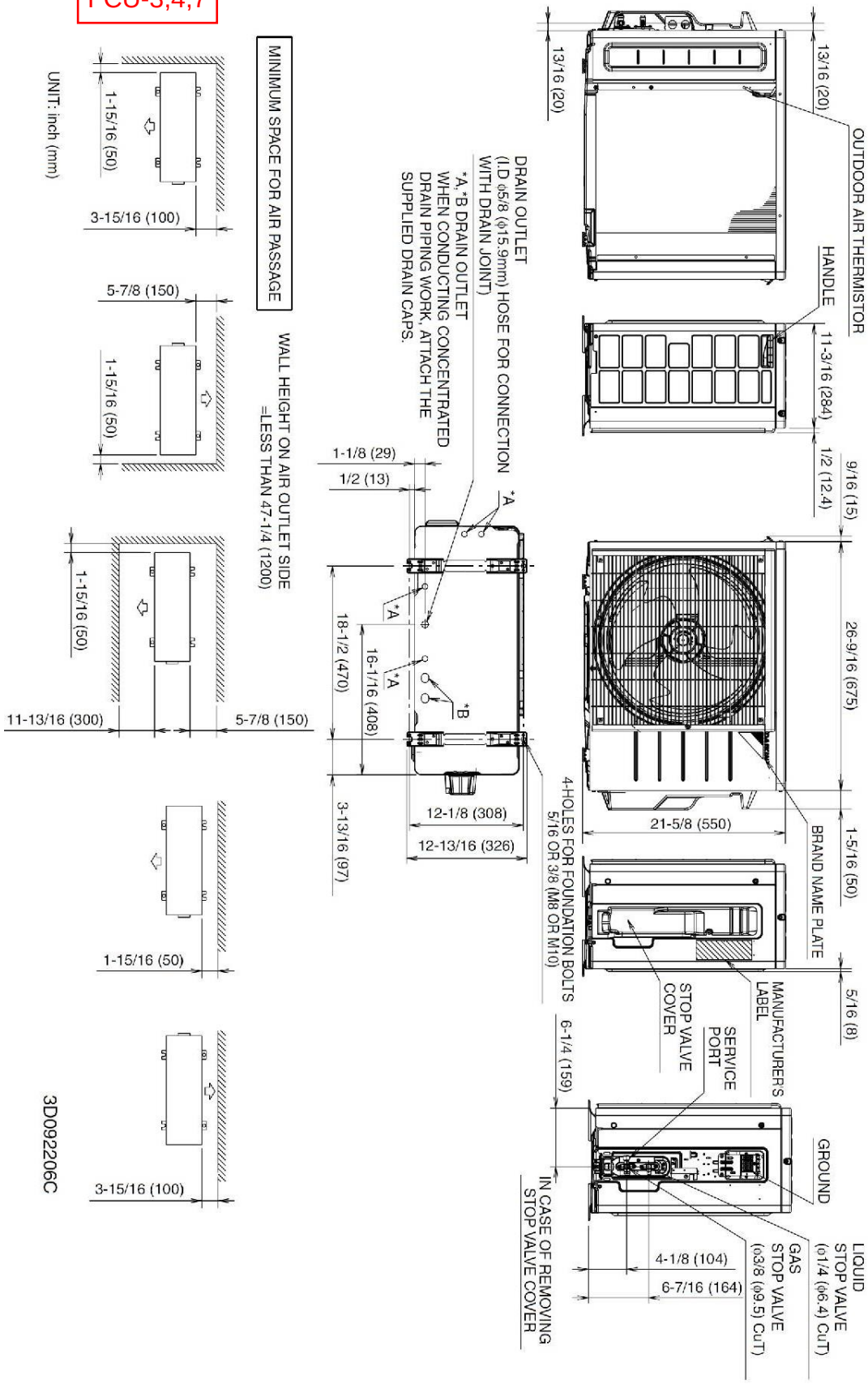
13/16 (20)
OUTDOOR AIR THERMISTOR
HANDLE
11-3/16 (284)
1/2 (12.4)
9/16 (15)
26-9/16 (675)
21-5/8 (550)
1-5/16 (50)
BRAND NAME PLATE
5/16 (8)
MANUFACTURER'S LABEL
SERVICE PORT
STOP VALVE COVER
6-1/4 (159)
GROUND
LIQUID STOP VALVE (ø1/4 (ø6.4) CuT)
GAS STOP VALVE (ø3/8 (ø9.5) CuT)
4-1/8 (104)
6-7/16 (164)
IN CASE OF REMOVING STOP VALVE COVER
4-HOLES FOR FOUNDATION BOLTS 5/16 OR 3/8 (M8 OR M10)
13/16 (20)
DRAIN OUTLET (I.D ø5/8 (ø15.9mm) HOSE FOR CONNECTION WITH DRAIN JOINT)
*A, *B DRAIN OUTLET WHEN CONDUCTING CONCENTRATED DRAIN PIPING WORK, ATTACH THE SUPPLIED DRAIN CAPS.
1-1/8 (29)
1/2 (13)
*A
*B
18-1/2 (470)
16-1/16 (408)
12-1/8 (308)
12-13/16 (326)
3-13/16 (97)
MINIMUM SPACE FOR AIR PASSAGE
WALL HEIGHT ON AIR OUTLET SIDE =LESS THAN 47-1/4 (1200)
UNIT: inch (mm)
1-15/16 (50)
3-15/16 (100)
5-7/8 (150)
1-15/16 (50)
1-15/16 (50)
11-13/16 (300)
5-7/8 (150)
1-15/16 (50)
3-15/16 (100)
3D092206C

Optional Accessories

FCU-3,4,7

Indoor Unit – One Controller required		
Included	**Part Number**	**Description**
	BRC1E73	Wired Remote Controller
	BRC082A43	Wireless Remote Controller
	KRCS01-4B	Remote Sensor
	DACA-CP2-1	Maxi Orange Condensate Pump (up to 49 ft head)
	DACA-CP3-1	Mini Condensate Pump (up to 33 ft head)
	KRP1C74	Wiring Adaptor
	KRP4A98	Mounting Plate
	DFBS27A13	MERV 13 Filter Kit
	AZAI6WSCDKA	DKN Cloud Wi-Fi Adaptor
	KRP4A71	Group Control Adaptor PCB
Outdoor Unit		
Included	**Part Number**	**Description**
	DACA-WB-1	Powder-Coated Wall-Mounted Bracket
	KEH067A41E	Drain Pan Heater
	KKP937A4	Drain Plug for OD Unit
	KPW937F4	Low Ambient Wind Baffle / Air Adjustment Grille (09/12 MBH)
	KKG067A41	Back protection wire net (09/12 MBH)

Standard Equipment

Part Number	Description
2261089	Drain Pump
2261096	Float Switch Assy.

External Static Pressure / Airflow Chart

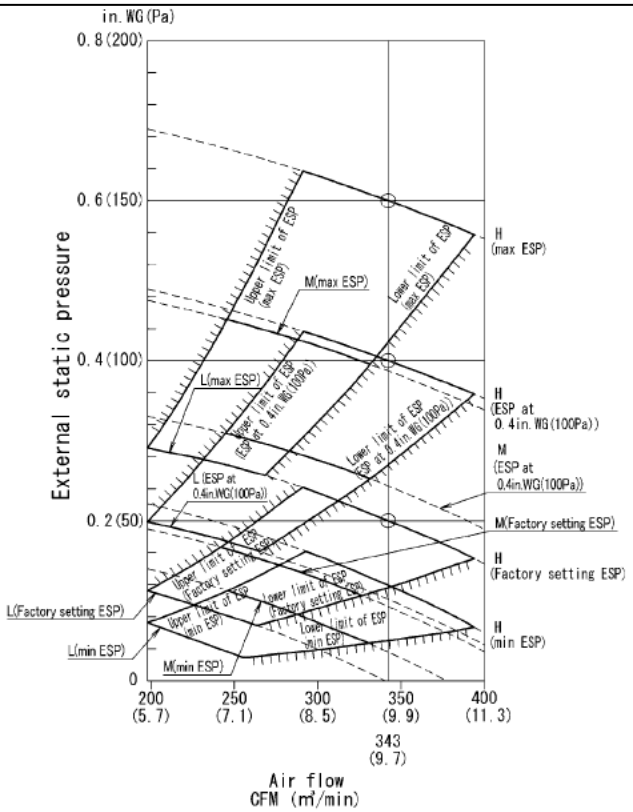

Job Name:	FCU-8,9
Tag#	

Submittal Data Sheet

FTK09AXVJU / RK09AXVJU

0.75-Ton Wall Mounted Cooling Only System

Complete warranty details available from your local dealer or at www.daikincomfort.com. To receive the 12-Year Parts Limited Warranty, online registration must be completed within 60 days of installation. Online registration is not required in California or Quebec. If product is installed in a commercial application, limited warranty period is 5 years.

Indoor Specifications

	Cooling	
Airflow Rate (cfm)	H	M
	431	322
	L	SL
	249	142
Sound (dBA) H / M / L / SL	43 / 36 / 30 / 19	
Dimensions (H × W × D) (in)	11-1/3 × 30-29/32 × 9-27/32	
Weight (Lbs)	20	

Outdoor Specifications

Compressor	Hermetically Sealed Swing Type	
Refrigerant	R-410A	
Factory Charge (Lbs)	1.54	
Refrigerant Oil	PVE (FVC50K)	
Airflow Rate (cfm)	Cooling	
	H	1,083
Sound Pressure Level (dBA)	46	
Dimensions (H × W × D) (in)	21-11/16 × 26-1/2 × 11-3/16	
Weight (Lbs)	55	

Efficiency

Cooling	
SEER	19
EER	12.5

Performance

Cooling (Btu/hr)	
Rated (Min/Max)	8,900 (4,400 / 10,200)
Sensible @ AHRI	8,040
Moisture Removal gal/h	.08
Standard Operating Range	50°F – 115°F
Extended Operating Range*	-4°F – 115°F

Rated Cooling Conditions: Indoor: 80°F DB/67°F WB
Outdoor: 95°F DB/75°F WB

***With field settings and wind baffle**

Electrical

	208/60/1	230/60/1
System MCA	7.0	7.0
System MFA	15.0	15.0
Compressor RLA	6.75	6.75
Outdoor fan motor FLA	0.36	0.36
Outdoor fan motor W	41	41
Indoor fan motor FLA	0.30	0.30
Indoor fan motor W	38	38

MFA: Max. fuse amps **MCA**: Min. circuit amps (A) **FLA**: Full load amps (A)
RLA: Rated load amps (A) **W**: Fan motor rated output (W)

Piping

Liquid (in)	1/4
Gas (in)	3/8
Drain (in)	3/4
Max. Interunit Piping Length (ft)	65.625
Max. Interunit Height Difference (ft)	49.25
Chargeless (ft)	32.8
Additional Charge of Refrigerant (oz/ft)	.21

FTK09AXVJU Dimensional Data

FCU-8,9

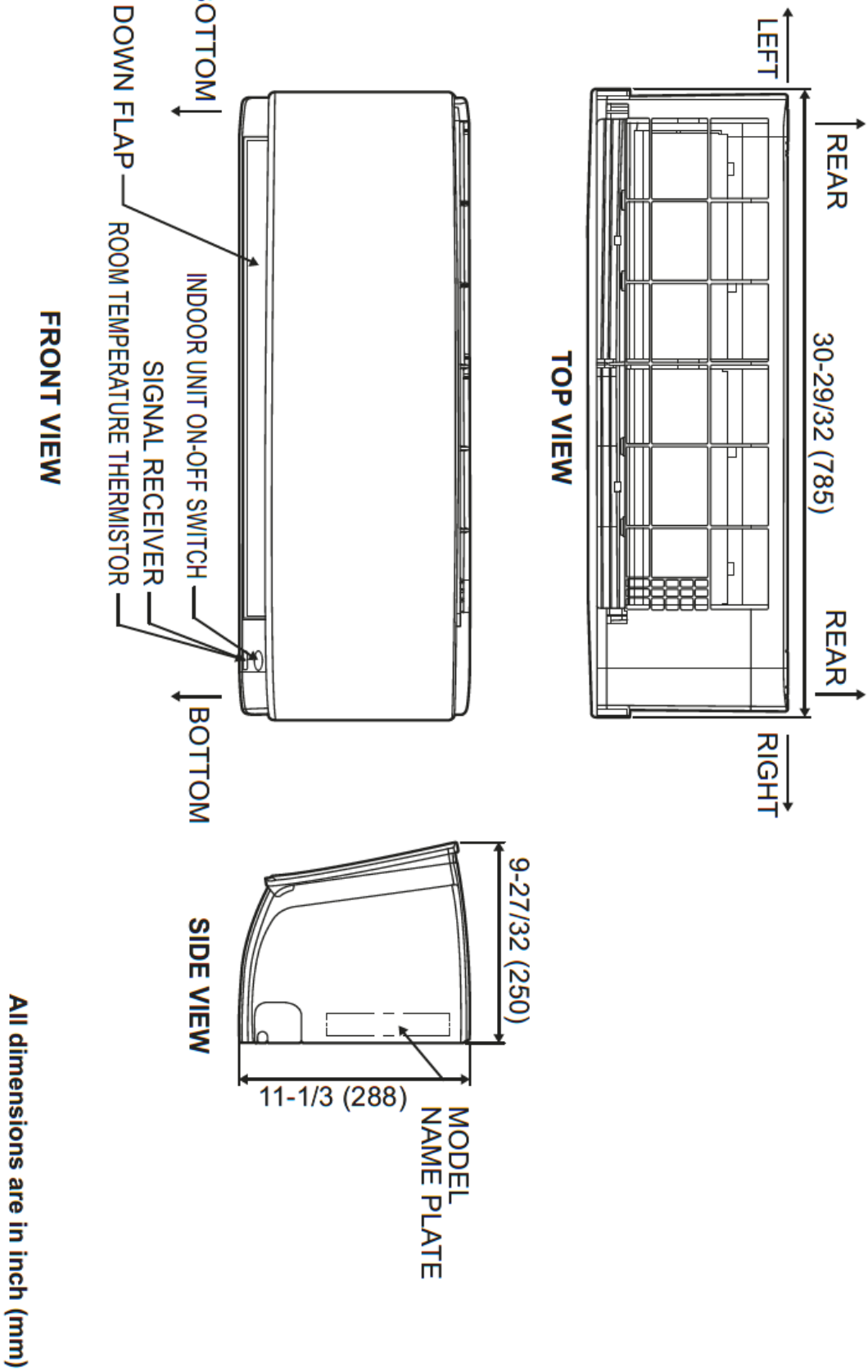

RK09AXVJU Dimensional Data

FCU-09

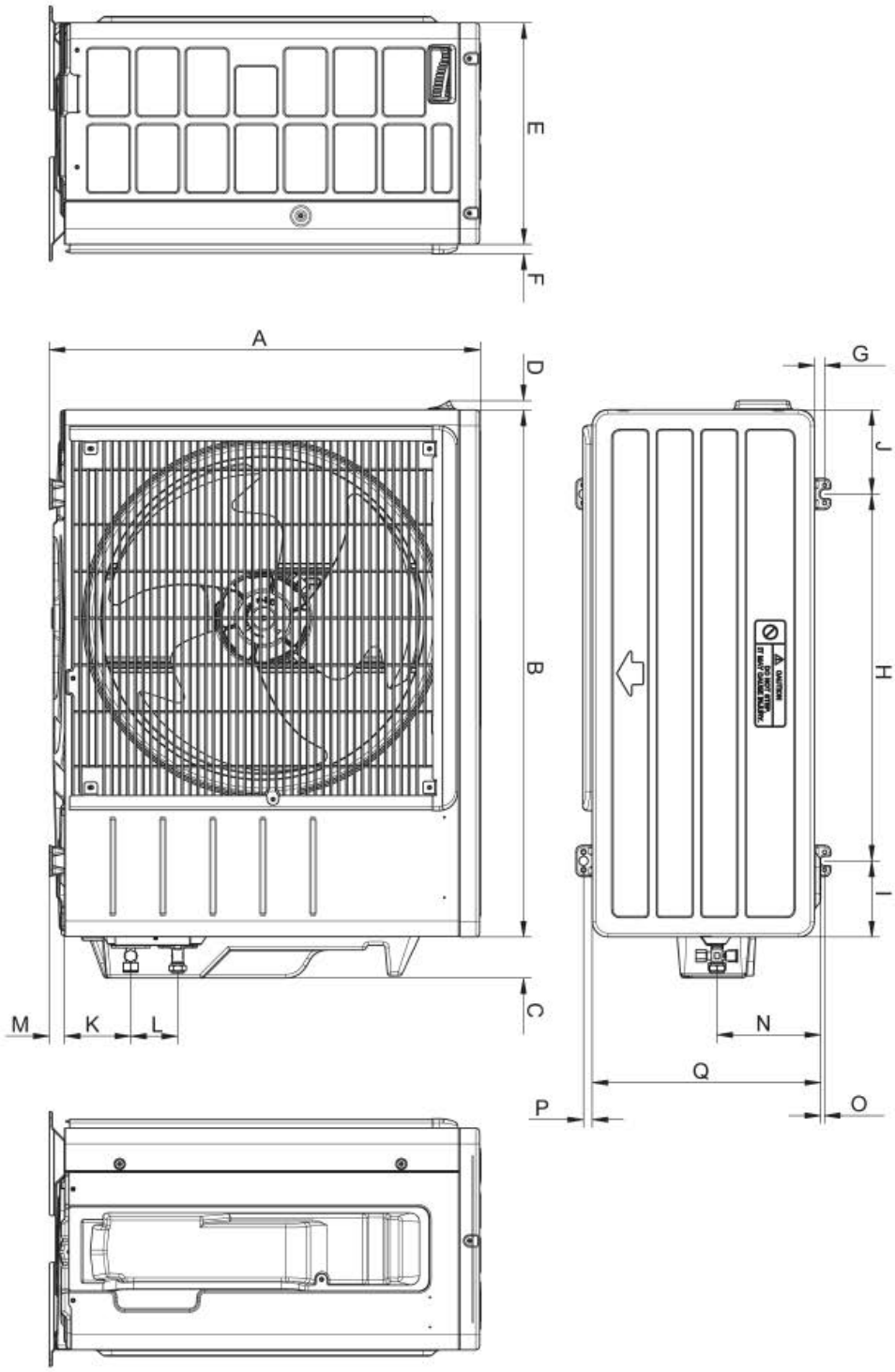

Dimension / Model 09/12	A	B	C	D	E	F	G	H	I	J	K	L	M	N	O	P	Q
	21-11/16 (550)	26-1/2 (675)	2-1/16 (53)	15/32 (12)	11-3/16 (284)	15/32 (12)	1/2 (13)	18-1/2 (470)	3-13/16 (97)	4-1/4 (108)	3-3/8 (86)	2-3/8 (60)	25/32 (20)	5-1/4 (133)	3/16 (5)	7/16 (11)	11-1/2 (292)

All dimensions are in inch (mm)

Optional Accessories

FCU-8,9

Indoor Unit		
Included	**Part Number**	**Description**
	BRP072A43	Wireless Interface Adapter (S21 Adapter Included)
	DACA-CP1-1	Inline Condensate Pump (Fits inside all Daikin wall & floor mount units)
	DACA-CP4-1	External Condensate Pump

Outdoor Unit		
Included	**Part Number**	**Description**
	DACA-WB-1	Powder-Coated Wall-Mounted Bracket
	KPW937F4	Air direction adjustment grille (09 & 12)
	KKG067A41	Back protection wire net (09 & 12)

EF-3

Rn2 Inline Radon Fan

4.5" pipe, plastic housing, 2.0" max SP
Item #: 89052
Variant: 120V 1~ 60Hz

Rn2 Radon Fan is designed for active radon mitigation systems to employ for applications where medium suction and low flow are needed. It is a perfect choice for medium Radon levels and moderate sub-slab communication.

• Designed specifically for Active Soil Depressurization (ASD) mitigation applications
• Medium suction, low flow
• For residential applications
• Air-tight housing - zero leakage
• UV resistant plastic housing
• UL Listed for safety and outdoor use
• HVI certified fan performance
• 5-year factory warranty

Manufactured from two molded plastic pieces seamlessly joined. It is inherently and permanently airtight ensuring no Radon gas leakage. A large watertight electrical wiring enclosure ensures electrical installation quick and simple. Fan motor is thermal overload protected with automatic reset and can be installed both indoors or outdoors. To simplify installation on a 3” or 4” PVC pipe, use FRIK 4x3 or FRIK 4x4 Installation kits.

Technical parameters

nan		
Voltage (nominal)	120	V
Frequency	60	Hz
Phase(s)	1~	
Input power	58	W
Input current	0.484	A
Impeller speed	2,533	r.p.m.
Air flow	max 166	cfm

EF-3

Protection/Classification		
Enclosure class, motor	IP44	
Insulation class	B	
Certificate	cULus, HVI	

Dimensions and weights		
Duct dimension; Circular, inlet	4	in.
Duct dimension; Circular, outlet	4	in.
Weight	4.9	lb

Optional		
Duct connection type	Circular	

Performance

EF-3

Performance curve

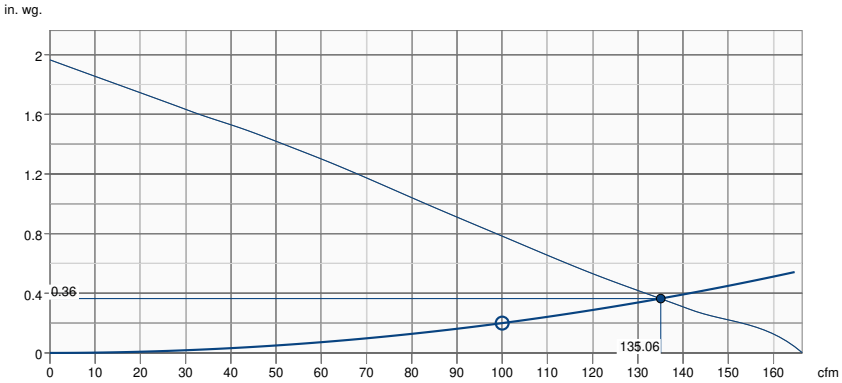

Hydraulic data	
Required air flow	100 cfm
Required static pressure	0.20 in. wg.
Working air flow	135 cfm
Working static pressure	0.36 in. wg.
Air density	0.075 lb/ft³
Power	58 W
Fan control - RPM	2537 rpm
Current	0.48 A
Airflow efficiency	2.3 cfm/W
Control voltage	120.0 V
Supply voltage	120 V

Dimensions

EF-3

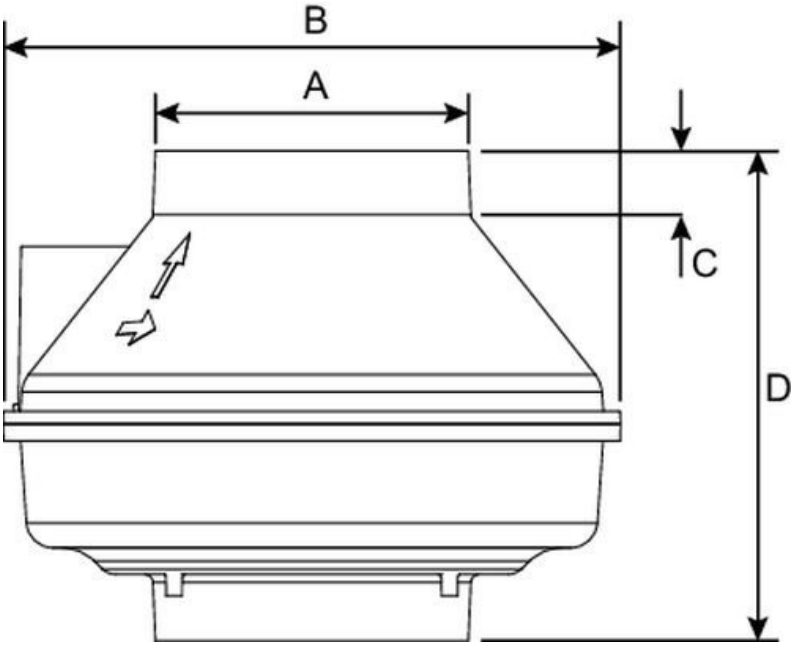

Model	A	B	C	D
Rn1	4 15/32 (114)	10 (254)	1 1/4 (32)	9 1/4 (235)
Rn2	4 15/32 (114)	10 (254)	1 1/4 (32)	9 1/4 (235)
Rn3	5 7/8 (149)	11 1/2 (292)	1 1/4 (32)	9 1/4 (235)

Dimensions in inches (mm).

Wiring

EF-3

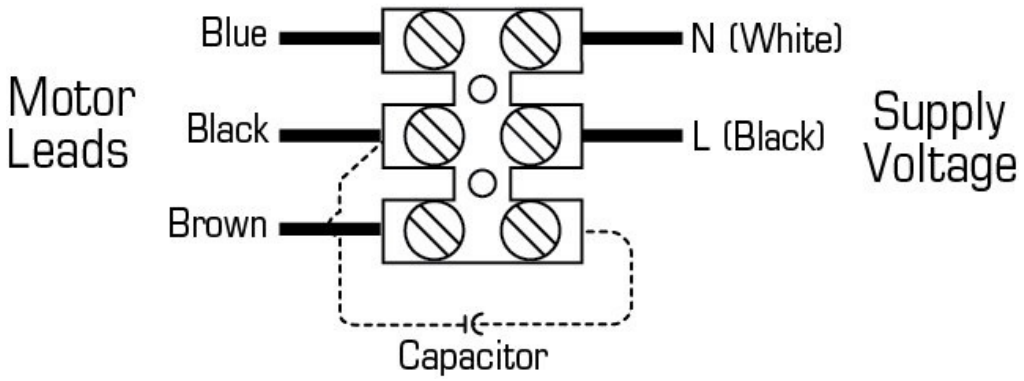
Motor Leads
Blue
Black
Brown
N (White)
L (Black)
Supply Voltage
Capacitor

EF-3

Accessories

- FRIK 4x3 Rn Installation Kit (95904)
- LDVI® 4x3 Bulk Pack, 54 pcs (95908)
- FRIK 4x4 Rn Installation Kit (95905)
- LDVI® 4x4 Bulk Pack, 36 pcs (95909)

Documents

- Rn Series Brochure.pdf
- Rn2_Sales_Sheet.pdf
- 484840 Rn OIPM EN FR .pdf

GREENHECK
Building Value in Air.

EF-1

Job Name: CUE-140-VG Cut Sheet
Tag: MK-1
Quantity: 1
Printed Date: August 13, 2021

Model: CUE-140-VG

Direct Drive Upblast Centrifugal Roof Exhaust Fan

Standard Construction Features: Aluminum housing. Centrifugal backward inclined aluminum (composite for sizes 60-95) wheel. Direct driven motor mounted on vibration isolation.

Fan Configuration	
Drive type	Direct

Performance	
Requested Volume (CFM)	1,400
Actual Volume (CFM)	1,400
Total External SP (in. wg)	0.5
Fan RPM	1,064
Operating Power (bhp)	0.23
Startup Power (bhp)	0.23
Air Stream Temp (F)	70
Start-up Temp (F)	70
Air Density (lbs/ft^3)	0.074
Elevation (ft)	300
Static Efficiency (%)	48
Outlet Velocity (ft/min)	814

Motor	
Size (hp)	1/2
V/C/P	115/60/1
NEC FLA (Amps)	6.6

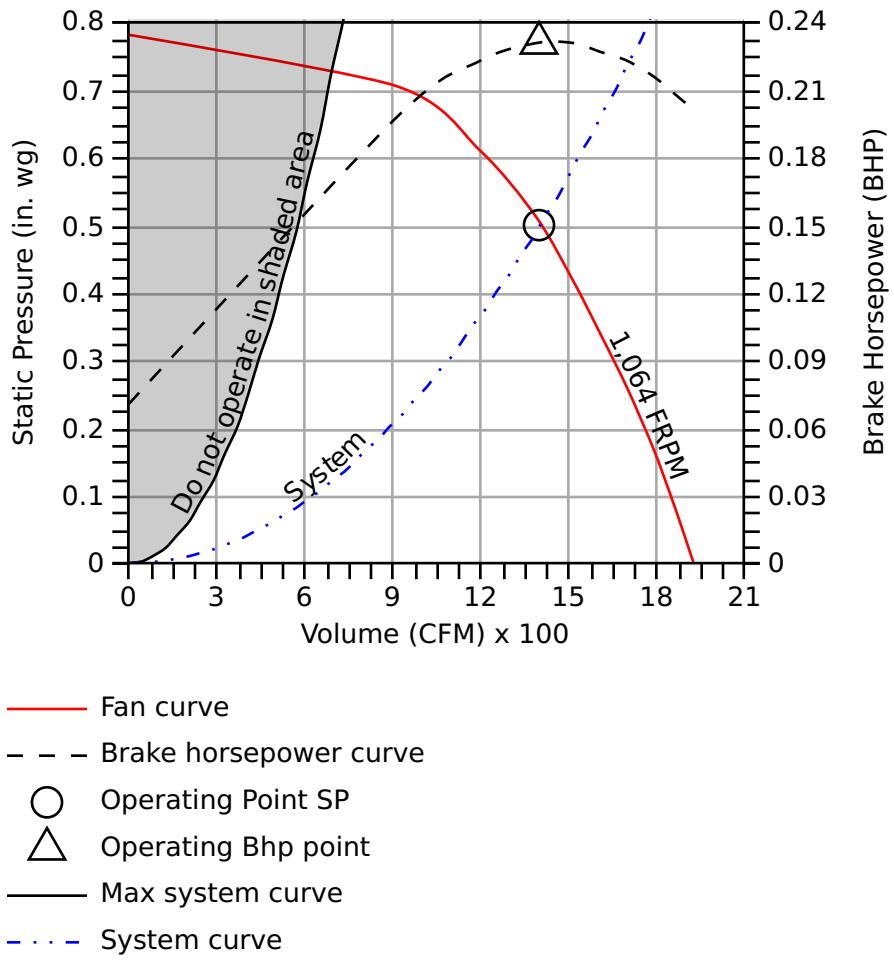

Sound

	Octave Bands (hz)								LwA	dBA	Sones
	62.5	125	250	500	1000	2000	4000	8000			
Inlet	68	79	72	66	61	61	53	48	70	58	9.5

AMCA WORLDWIDE CERTIFIED RATINGS
SOUND AND AIR PERFORMANCE
AIR MOVEMENT AND CONTROL ASSOCIATION INTERNATIONAL, INC.
www.amca.org

Greenheck Fan Corporation certifies that the model shown herein is licensed to bear the AMCA Seal. The ratings shown are based on tests and procedures performed in accordance with AMCA Publication 211 and AMCA Publication 311 and comply with the requirements of the AMCA Certified Ratings Program.The AMCA certified ratings seal applies to sound and air performance ratings only.Performance certified is for installation type A: Free inlet, free outlet.Power rating does not include transmission losses.Performance ratings do not include the effects of appurtenances.The sound ratings shown are loudness values in hemispherical sones at 1.5 m (5 ft) in a hemispherical free field calculated per ANSI/AMCA Standard 301.Values shown are for Installation Type A: free inlet hemispherical sone levels.dBA levels are not licensed by AMCA International. The AMCA Certified Ratings Seal for Sound applies to inlet sone ratings only.

Job Name: CUE-140-VG Cut Sheet
Tag: MK-1
Quantity: 1
Printed Date: August 13, 2021

Dimensions and Weights		
Label	**Value**	**Description**
-	66	Weight w/o accessories (lbs)
A	42	Overall Height (in)
D	29	Overall Width (in)
B	22	Curb Cap Width (in)
C	22	Curb Cap Length (in)
-	16	Duct / Damper Width (in)
-	16	Duct / Damper Length (in)
-	18.5	Roof Opening Width (in)
-	18.5	Roof Opening Length (in)

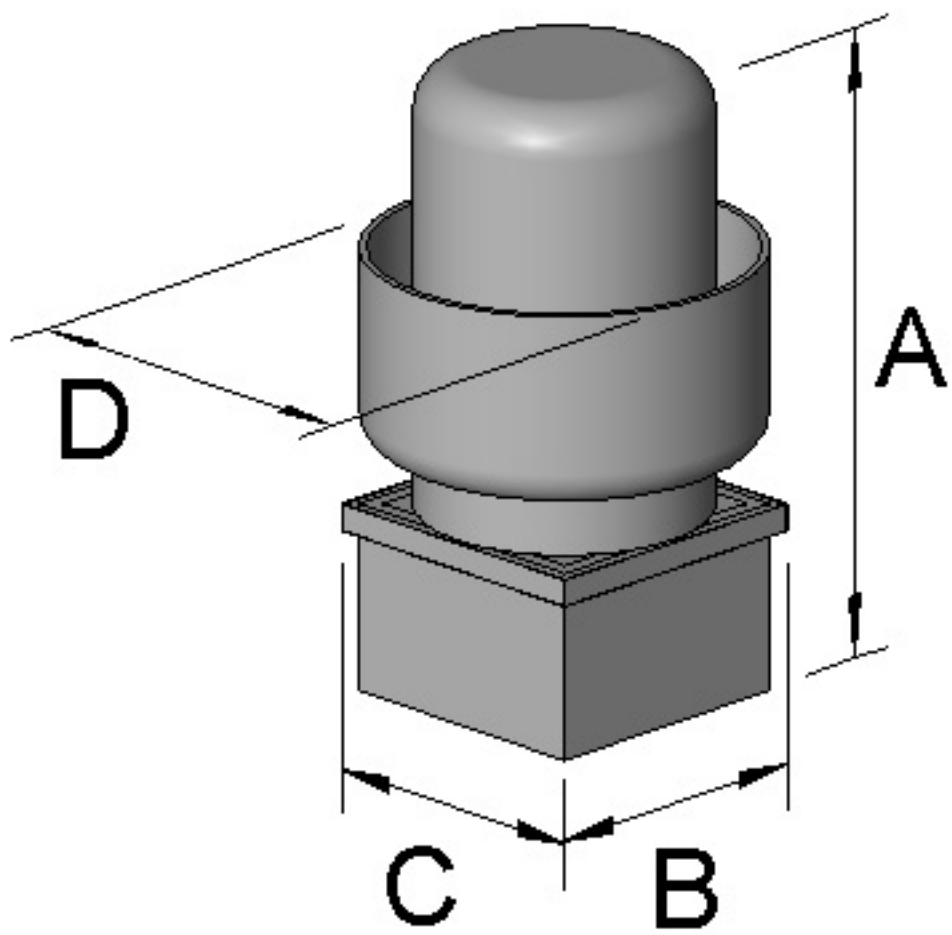

*All dimensions are in inches.

EF-2

Job Name: CUE-070-G Cut Sheet
Tag: MK-1
Quantity: 1
Printed Date: August 20, 2021

Model: CUE-070-G

Direct Drive Upblast Centrifugal Roof Exhaust Fan

Standard Construction Features: Aluminum housing. Centrifugal backward inclined aluminum (composite for sizes 60-95) wheel. Direct driven motor mounted on vibration isolation.

Fan Configuration	
Drive type	Direct

Performance	
Requested Volume (CFM)	150
Actual Volume (CFM)	150
Total External SP (in. wg)	0.25
Fan RPM	1,300
Operating Power (bhp)	0.01
Startup Power (bhp)	0.01
Air Stream Temp (F)	70
Start-up Temp (F)	70
Air Density (lbs/ft^3)	0.074
Elevation (ft)	300
Static Efficiency (%)	44
Outlet Velocity (ft/min)	384

Motor	
Size (hp)	1/60
V/C/P	115/60/1
NEC FLA (Amps)	NA

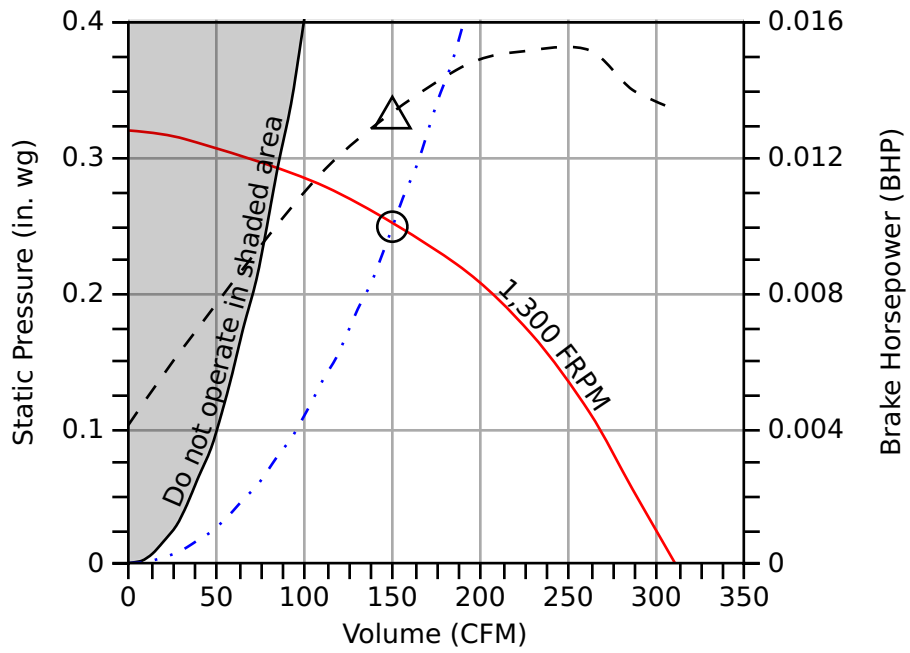

- Fan curve
- Brake horsepower curve
- Operating Point SP
- Operating Bhp point
- Max system curve
- System curve

Static Pressure Calculations	
External SP	0.25 in. wg
Direct Drive RPM Adjustment	0 in. wg
Total External SP	0.25 in. wg

Sound

	Octave Bands (hz)								LwA	dBA	Sones
	62.5	125	250	500	1000	2000	4000	8000			
Inlet	63	63	56	42	35	33	31	27	51	40	2.4

Greenheck Fan Corporation certifies that the model shown herein is licensed to bear the AMCA Seal. The ratings shown are based on tests and procedures performed in accordance with AMCA Publication 211 and AMCA Publication 311 and comply with the requirements of the AMCA Certified Ratings Program.The AMCA certified ratings seal applies to sound and air performance ratings only.Performance certified is for installation type A: Free inlet, free outlet.Power rating does not include transmission losses.Performance ratings do not include the effects of appurtenances.The sound ratings shown are loudness values in hemispherical sones at 1.5 m (5 ft) in a hemispherical free field calculated per ANSI/AMCA Standard 301.Values shown are for Installation Type A: free inlet hemispherical sone levels.dBA levels are not licensed by AMCA International. The AMCA Certified Ratings Seal for Sound applies to inlet sone ratings only.

Job Name: CUE-070-G Cut Sheet
Tag: MK-1
Quantity: 1
Printed Date: August 20, 2021

Dimensions and Weights		
Label	**Value**	**Description**
-	26	Weight w/o accessories (lbs)
A	26	Overall Height (in)
D	20	Overall Width (in)
B	17	Curb Cap Width (in)
C	17	Curb Cap Length (in)
-	8	Duct / Damper Width (in)
-	8	Duct / Damper Length (in)
-	10.5	Roof Opening Width (in)
-	10.5	Roof Opening Length (in)

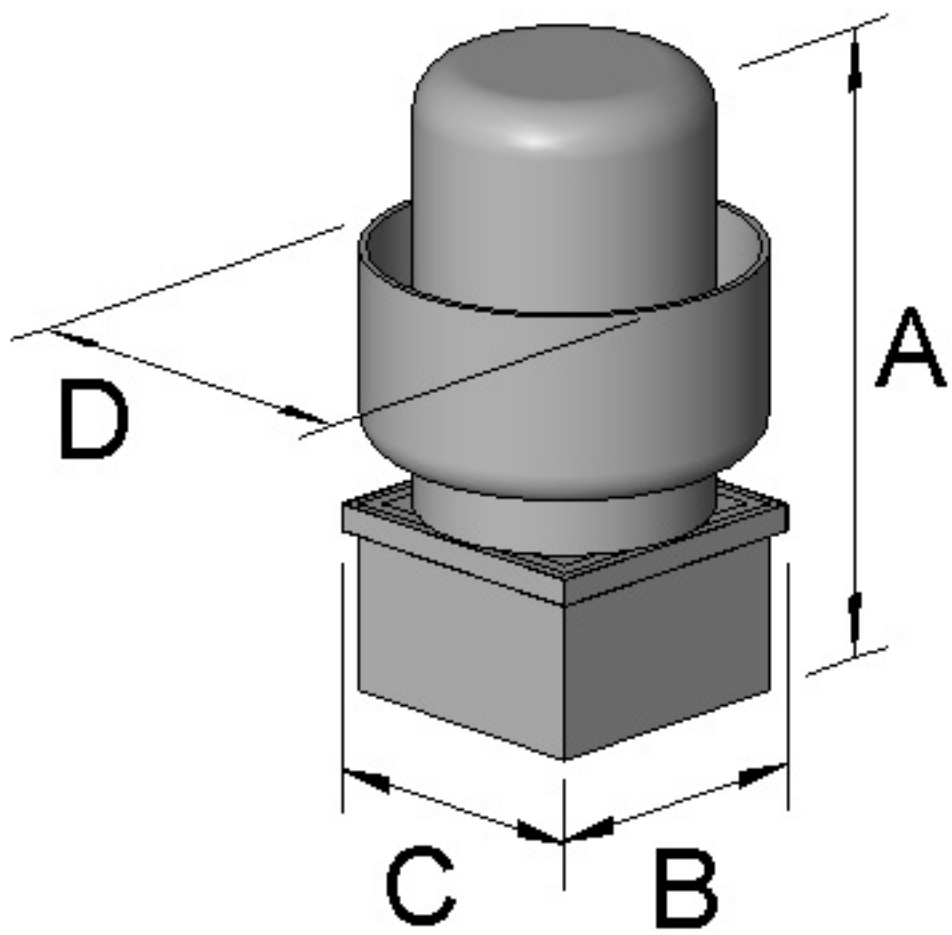

*All dimensions are in inches.

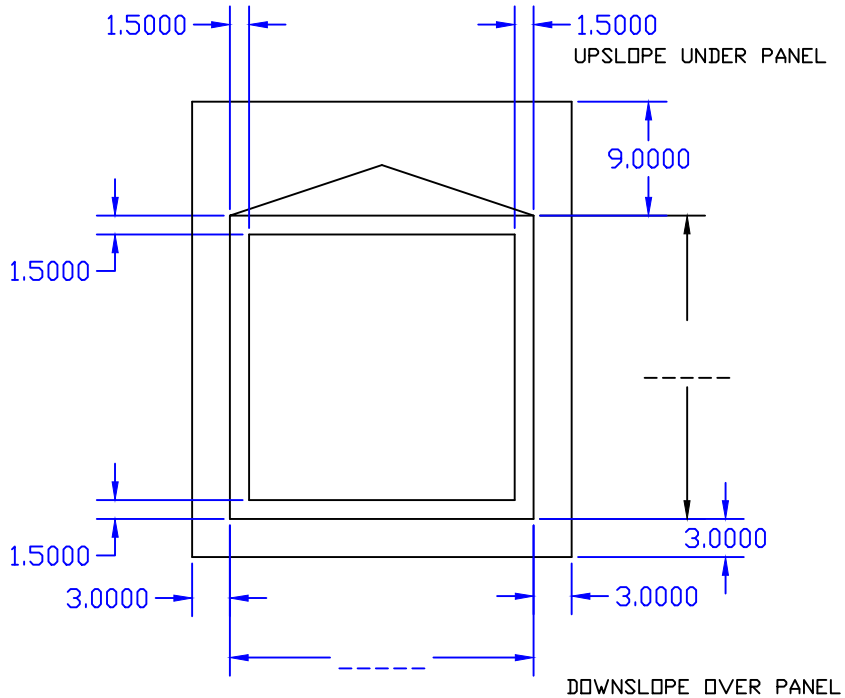

MODEL CMB3

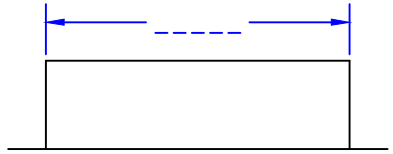

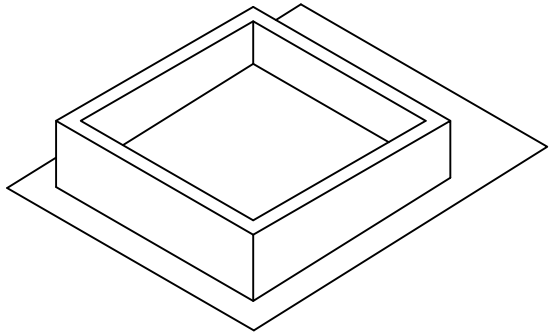

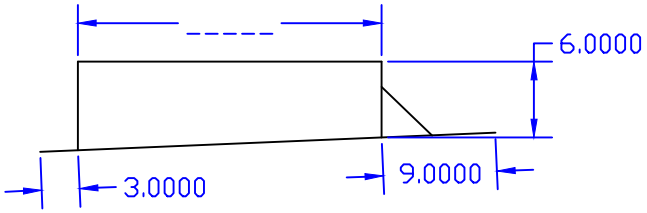

SPECIFICATIONS:

.080 ALUMINUM

PITCHED CORRECTED TO PROVIDE A LEVEL TOP

6" HEIGHT

1-1/2" TOP FLANGE

ALL WELDED CONSTRUCTION

NO CONTOURS WITH A CRICKET

3" SIDE FLANGES

1" INSULATION

OPTIONS:

___14 GAUGE GALVANIZED CONSTRUCTION

___18 GAUGE GALVANIZED CONSTRUCTION

___POWDER COAT FINISH

___SPECIAL HEIGHT

___WIDE FLANGES

___DAMPER SHELF

___MASTIC

___BUTYL SEALANT

___PREMIUM FASTENERS

___SUB-FRAMING

CUSTOM CURB
1585 LOS ANGELES AVE
SATICOY, CA 93004
(805) 647-1200
jack@customcurbinc.com

JOB NAME:	ROOF PANEL:	MATERIAL: .080 ALUMINUM	
QUOTE #	ROOF PITCH:	QTY:	DATE:

ESV

Single Duct Terminal Unit

Digital, Analog or Electric Control, Pressure Independent

☐ Digital Control, DESV ☐ Analog Control, AESV ☐ Electric Control, EESV

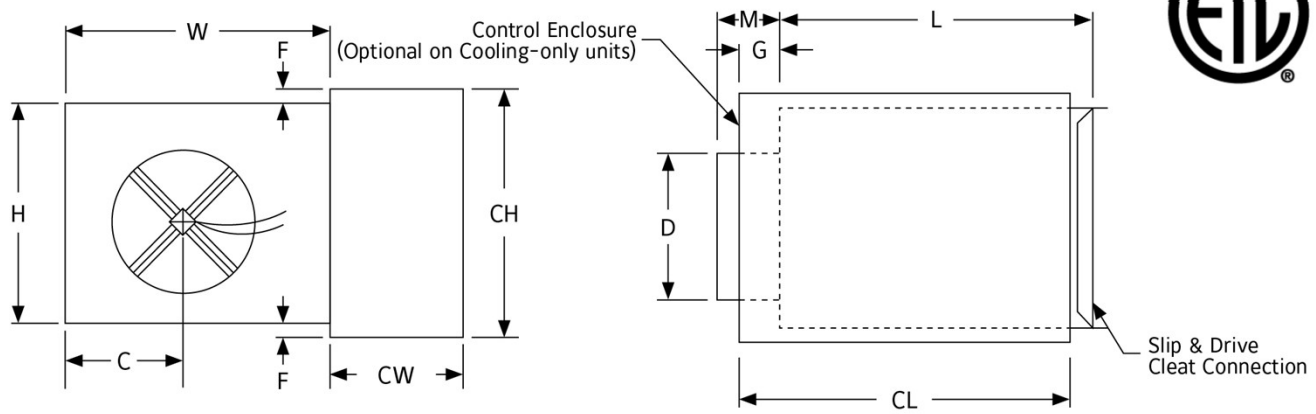

Right hand unit shown. All dimensions are in inches.

Size	CFM Range	D (H x W)	C	F	G	H	L	M	W	CH	CL	CW
4	0-225	3 7/8	6 1/2	2 1/8	7 3/8	8	15 1/2	5 3/8	12	12 1/4	18	6 1/2
5	0-350	4 7/8	6 1/2	2 1/8	7 3/8	8	15 1/2	5 3/8	12	12 1/4	18	6 1/2
6	0-500	5 7/8	6 1/2	2 1/8	7 3/8	8	15 1/2	3 3/8	12	12 1/4	18	6 1/2
7	0-650	6 7/8	6	1 1/8	7 3/8	10	15 1/2	3 3/8	12	12 1/4	18	6 1/2
8	0-900	7 7/8	6	1 1/8	7 3/8	10	15 1/2	3 3/8	12	12 1/4	18	6 1/2
9	0-1050	8 7/8	7	-	5 3/8	12 1/2	15 1/2	3 3/8	14	12 1/4	18	6 1/2
10	0-1400	9 7/8	7	-	5 3/8	12 1/2	15 1/2	3 3/8	14	12 1/4	18	6 1/2
12	0-2000	11 7/8	8	-	5 3/8	15	15 1/2	3 3/8	16	12 1/4	18	6 1/2
14	0-3000	13 7/8	10 1/2	-	3 3/8	17 1/2	15 1/2	3 3/8	20	12 1/4	18	6 1/2
16	0-4000	15 7/8	13 1/2	-	3 3/8	18	15 1/2	3 3/8	24	12 1/4	18	6 1/2
20	0-2000	7 1/2 x 12 1/4	8	1/4	3	10	15 1/2	3 3/8	16	10 1/4	15 1/4	6 1/2
30	0-4000	7 1/2 x 23 3/4	13 5/8	1/4	3	10	15 1/2	3 3/8	27 1/4	10 1/4	15 1/4	6 1/2
40	0-8000	15 7/8 x 23 7/8	19	1 1/8	5 3/8	18	15	3 3/8	38	12 1/4	18	6 1/2
5E	0-350	4 7/8	6 1/2	2 1/8	7 3/8	10	15 1/2	3 3/8	12	12 1/4	18	6 1/2
6E	0-500	5 7/8	6 1/2	2 1/8	7 3/8	10	15 1/2	3 3/8	12	12 1/4	18	6 1/2
7E	0-650	6 7/8	8	1 1/8	5 3/8	12 1/2	15 1/2	3 3/8	14	12 1/4	18	6 1/2
8E	0-900	7 7/8	7 3/4	1 1/8	5 3/8	12 1/2	15 1/2	3 3/8	14	12 1/4	18	6 1/2
1E	0-1400	9 7/8	9	-	5 3/8	15	15 1/2	3 3/8	16	12 1/4	18	6 1/2
2E	0-2000	11 7/8	12	-	3 3/8	17 1/2	15 1/2	3 3/8	20	12 1/4	18	6 1/2
4E	0-3000	13 7/8	14 3/8	-	3 3/8	18	15 1/2	3 3/8	24	12 1/4	18	6 1/2

This submittal is meant to demonstrate general dimensions of this product. The drawings are not meant to detail every aspect of the product. Drawings are not to scale. Titus reserves the right to make changes without written notice.

All rights reserved. No part of this work may be reproduced or transmitted in any form or by any means, electronic or mechanical, including photocopying and recording, or by any information storage retrieval system without permission in writing from Air Distribution Technologies, Inc.

ESV

Single Duct Terminal Unit
Pneumatic Control, Pressure Independent

☐ Pneumatic Control, PESV

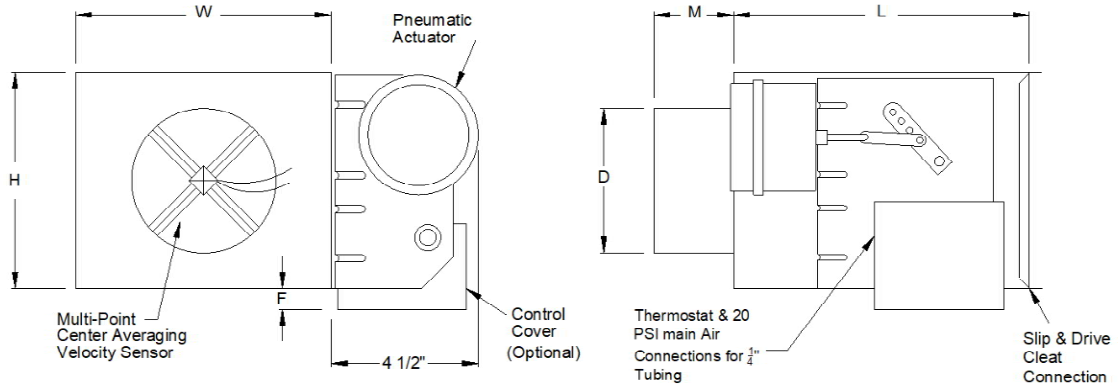

Right hand unit shown. All dimensions are in inches.

Size	CFM Range	D (H x W)	F	H	L	M	W
4	0-225	3 7/8	2 1/8	8	15 1/2	5 3/8	12
5	0-350	4 7/8	2 1/8	8	15 1/2	5 3/8	12
6	0-500	5 7/8	2 1/8	8	15 1/2	3 3/8	12
7	0-650	6 7/8	1 1/8	10	15 1/2	3 3/8	12
8	0-900	7 7/8	1 1/8	10	15 1/2	3 3/8	12
9	0-1050	8 7/8	-	12 1/2	15 1/2	3 3/8	14
10	0-1400	9 7/8	-	12 1/2	15 1/2	3 3/8	14
12	0-2000	11 7/8	-	15	15 1/2	3 3/8	16
14	0-3000	13 7/8	-	17 1/2	15 1/2	3 3/8	20
16	0-4000	15 7/8	-	18	15 1/2	3 3/8	24
20	0-1800	7 1/2 x 12 1/4	1 1/8	10	15 1/2	3 3/8	16
30	0-4000	7 1/2 x 23 3/4	1/4	10	15 1/2	3 3/8	27 1/4
40	0-8000	23 7/8 x 15 7/8	1 1/8	18	15	3 3/8	38

This submittal is meant to demonstrate general dimensions of this product. The drawings are not meant to detail every aspect of the product. Drawings are not to scale. Titus reserves the right to make changes without written notice.

All rights reserved. No part of this work may be reproduced or transmitted in any form or by any means, electronic or mechanical, including photocopying and recording, or by any information storage retrieval system without permission in writing from Air Distribution Technologies, Inc.

General Description

- Heavy gauge steel housing. Mechanically sealed and gasketed, leak resistant construction. Less than 2% of nominal cfm at 1.5" sp wg.
- Dual density internal insulation, treated to resist air erosion. Meets requirements of NFPA 90A and UL 181.
- Units equipped with the Titus II velocity controller can either be direct acting or reverse acting, with the damper either normally open or normally closed. Controller maintains constant span and start point. (Span and start point are adjustable.)
- Rectangular discharge opening is designed for slip and drive cleat duct connection.
- Multipoint center averaging inlet velocity sensor.
- Control packages can be factory mounted by Titus.
- Choice of right hand or left hand control location.
- Units equipped with the Titus I velocity controller are available in both direct acting / normally open and reverse acting / normally closed operating modes.
- Model DESV without coils can be installed horizontally, vertically, or at any angle. Operation is not affected by position. For units with coils, consult technical support.
- Gauge tees for cfm measurement.
- OSHPD Seismic Certification: OSP-0352-10
- Only Titus Alpha digital and pneumatic controls approved for seismic installation.

Accessories (Optional)

Check ☑ if provided.

- ☐ 24 V Control Transformer
- ☐ Dust Tight Enclosure Seal
- ☐ Fibre Free Liner
- ☐ ½" EcoShield Liner
- ☐ ½" Fibre Free Liner
- ☐ 1" Fiberglass Liner
- ☐ 1" EcoShield Liner
- ☐ 1" Fibre Free Liner
- ☐ Low Leakage Seal/Test/Certify
- ☐ SteriLoc Liner
- ☐ UltraLoc Liner
- ☐ ½" EcoShield Liner (Foil Face)
- ☐ 1" EcoShield Liner (Foil Face)
- ☐ Disconnect Switch
- ☐ Hanger Brackets
- ☐ Removable Air Flow Sensor
- ☐ Bottom Access Door
- ☐ OSP & IBC -S Seismic Certification
- ☐ Red List Compliant "Google" Gasketing
- ☐ _____

☐ Integral Sound Attenuator

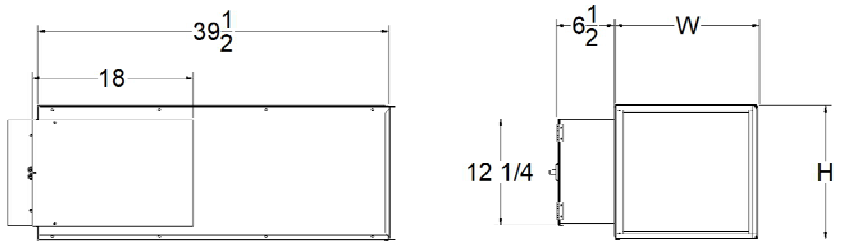

DESV, AESV, EESV

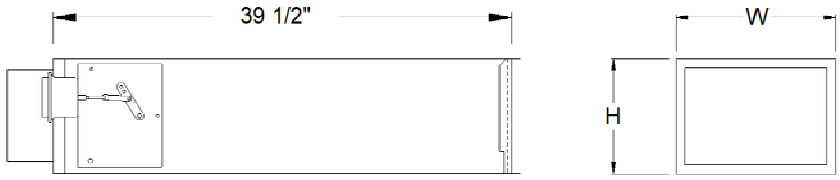

PESV

This submittal is meant to demonstrate general dimensions of this product. The drawings are not meant to detail every aspect of the product. Drawings are not to scale. Titus reserves the right to make changes without written notice.

All rights reserved. No part of this work may be reproduced or transmitted in any form or by any means, electronic or mechanical, including photocopying and recording, or by any information storage retrieval system without permission in writing from Air Distribution Technologies, Inc.

Accessories (Optional)

☐ Hot Water Coil Section

- Aluminum ripple fins, 10 per inch
- Coil pipe connections are male, sweat, type "L" copper. Connection sizes on unit sizes 04-08 are $^1/_2$" OD for 1 row coil and $^5/_8$" on 2 row coils. All other coils have $^7/_8$" OD.
- Coil is installed at discharge of unit.
- On units with attenuators, coil are installed at the discharge of attenuator.
- Coils rated and certified to AHRI Standard 410

☐ 1 Row
☐ 2 Row
☐ 3 Row
☐ 4 Row

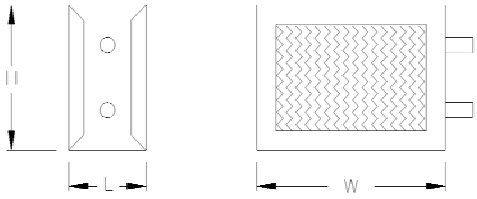

☐ Electric Coil Section ☐ Optional SCR Controlled Electric Heater ☐ Optional Lynergy Controlled Electric Heater

Standard Features

- Single side access to low voltage, high voltage, and electric heater controls.
- Automatic reset thermal cutouts, one per element
- Manual reset secondary protection.
- Positive pressure flow switch
- Magnetic contactor for each step.
- Slip and drive cleat discharge duct connection.

Options

☐ Fuse Block
☐ Disconnect switch, door interlock type
☐ Dust tight construction
☐ Mercury contactors

Supply Voltage

☐ 120V, 1 ph, 60Hz
☐ 208V, 1 ph, 60Hz
☐ 240V, 1 ph, 60Hz
☐ 277V, 1 ph, 60Hz
☐ 208V, 3 ph, 60Hz
☐ 480V, 3 ph, 60Hz (4 wire wye standard)

DESV, AESV, EESV

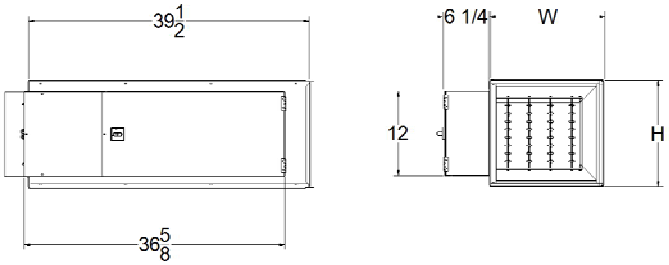

PESV

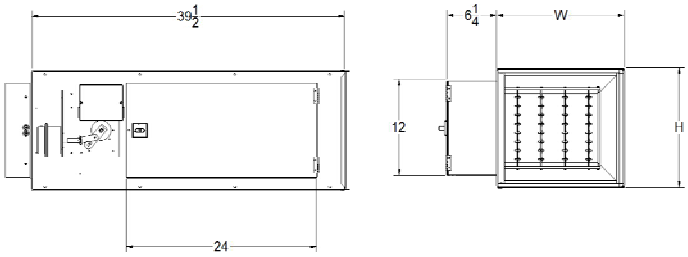

Size	H	W	Water Coil	
			L (1-2 Row)	L (3-4 Row)
4	8	12	5	7 $^1/_4$
5	8	12	5	7 $^1/_4$
6	8	12	5	7 $^1/_4$
7	10	12	5	7 $^1/_4$
8	10	12	5	7 $^1/_4$
9	12 $^1/_2$	14	5	7 $^1/_4$
10	12 $^1/_2$	14	5	7 $^1/_4$
12	15	16	5	7 $^1/_4$
14	17 $^1/_2$	20	7 $^1/_2$	9 $^3/_4$
16	18	24	7 $^1/_2$	9 $^3/_4$
20	10	16	5	7 $^1/_4$
30	10	27 $^1/_4$	5	7 $^1/_4$
40	18	38	5	7 $^1/_4$

The total length of the ESV unit is the summation of the unit length (with or without attenuator) and the length of the optional water coil.

This submittal is meant to demonstrate general dimensions of this product. The drawings are not meant to detail every aspect of the product. Drawings are not to scale. Titus reserves the right to make changes without written notice.

All rights reserved. No part of this work may be reproduced or transmitted in any form or by any means, electronic or mechanical, including photocopying and recording, or by any information storage retrieval system without permission in writing from Air Distribution Technologies, Inc.

UH-1,2,3

Catalog 723-5

ThinLine Vertical Unit Heaters

Type FHVC, FHVH, FHVS, FHWC Vertical Design

Model FHVC

Model FHVS

Nomenclature and Certification 3
ThinLine Vertical Unit Heaters 3
Features and Benefits 4
The ThinLine Advantage 5
Options and Accessories 6
Control Options 6
Unit Accessories 9
Factory Valve & Piping Packages 11
Control Valve Options 13
Performance Data. 14
Basic design data. 14
Unit Size. 14
Heating Performance - Hot Water Coil. 15
Air Volume Capacity Data 16
Electrical Data. 17
Electric Heaters 17
Motor Electrical Data 18
Physical Data 19
Unit Data 19
Unit Dimensions. 20
Decorative Wall Plate Dimensions 24
Fresh Air Intake Box Dimensions 24
Engineering Guide Specification 25

ThinLine Vertical Unit Heaters

Figure 1: Nomenclature

FH V S - 1 02 A

Unit Type
FC = Fan Coil
FH = Cabinet Unit Heater

Unit Configuration
V= Vertical
W = Wall Hung

Cabinet Type
C = Cabinet (Flat Top)
S = Slope Top
H = Hideaway

Voltage
A = 115/60/1
E = 208-230/60/1
J = 265-277/60/1

Unit Size
02 = 200 CFM
03 = 300 CFM
04 = 400 CFM
06 = 600 CFM
08 = 800 CFM
10 = 1000 CFM
12 = 1200 CFM

Design Series

AHRI Certification

AHRI CERTIFIED™
www.ahridirectory.org
Room Fan-Coils
AHRI Standard 440

Standard size units certified in accordance with the Room Fan-Coil Unit certification program, which is based on AHRI Standard 440.

Agency Listed

ETL LISTED C US
Intertek

All standard units

All Canadian units

Figure 2: Unit Features

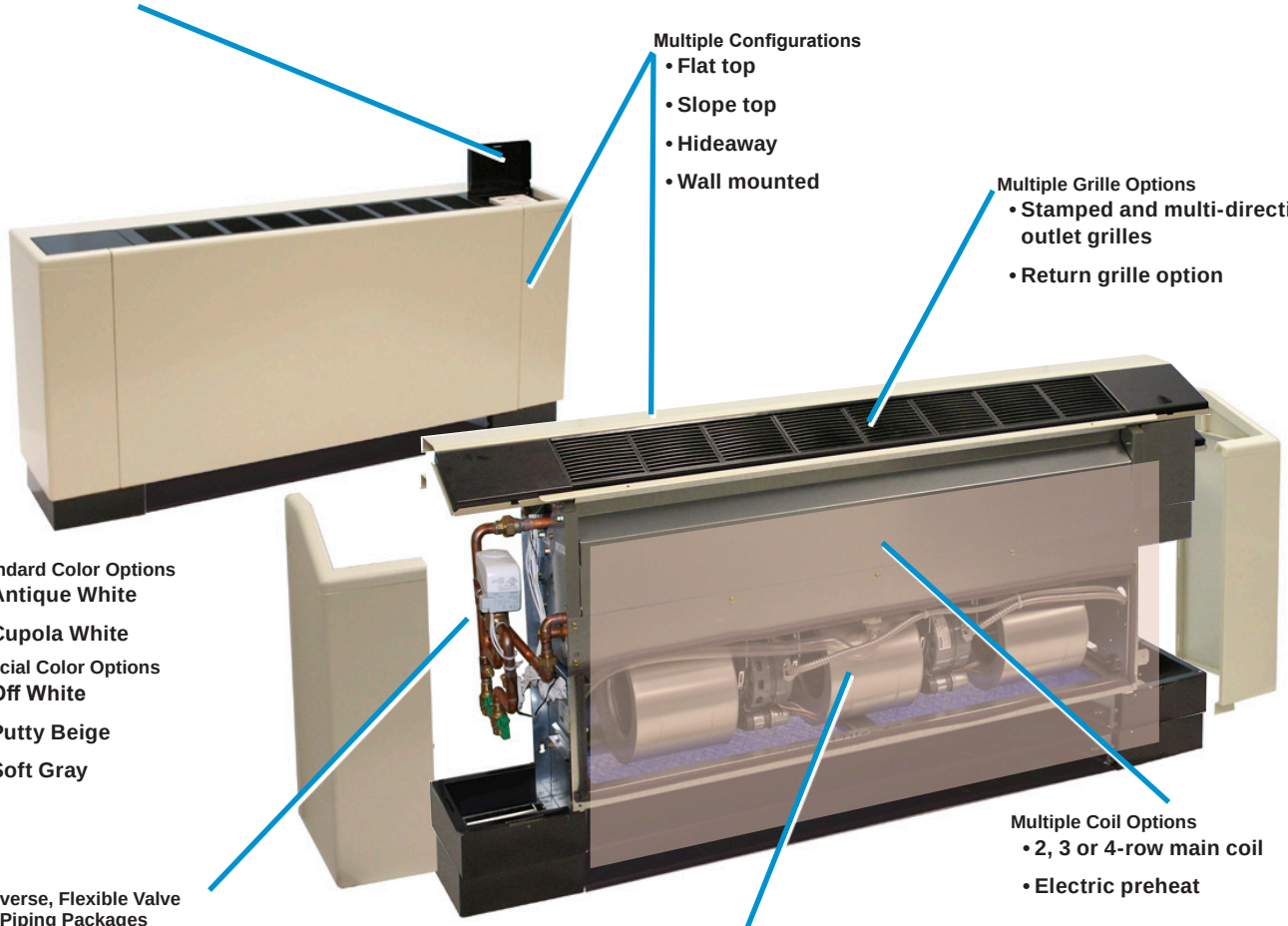

Multiple Control Options
- From 3-speed switch to low voltage interface board
- Remote or unit-mounted thermostat
- 3-speed or staged fan control

Multiple Configurations
- Flat top
- Slope top
- Hideaway
- Wall mounted

Multiple Grille Options
- Stamped and multi-directional outlet grilles
- Return grille option

Standard Color Options
- Antique White
- Cupola White

Special Color Options
- Off White
- Putty Beige
- Soft Gray

Multiple Coil Options
- 2, 3 or 4-row main coil
- Electric preheat

Diverse, Flexible Valve & Piping Packages
- Software selectable Factory-mounted, wired and tested
- Or, factory-assembled and shipped loose
- Normally closed or open, two-position or modulating valves, line or low voltage

Easily Removed Motor Assembly
- For easy maintenance and service

The ThinLine Advantage

New ThinLine vertical unit heaters combine the features most desired in a fan coil by building owners, specifying engineers and contractors alike. The result is a new, third generation fan coil design that meets the needs of all three.

For building owners

ThinLine unit heaters offer quiet operation. They fully comply with ASHRAE 62.1-2004 standards for high indoor air quality. And they offer a range of control options that can enhance occupant comfort and reduce operating costs. These units are also easy to maintain, with easy access to filters, fan motors and control systems. Heavier-gauge panels and locked control compartments for tamper-proof style cabinets are available. A total of five color options, both as standard and special requests are available for a variety of decor styles.

For specifying engineers

ThinLine unit heaters provide great versatility. A variety of vertical models are available with multiple arrangements and configurations.

- Coil options include two, three, and four-row main coils to provide precise heating and cooling performance for any requirement. Separate, single-row reheat coils (hot water or steam) are available. Separate, one-row or two-row preheat coils are also available with same or opposite-end coil connections.
- Multiple control options range from a simple fan speed switch to a low voltage interface board that can tie into most building automation systems. Non-communicating or communicating control options for LonTalk and BacNet will be available soon. Contact your Daikin representative for details.
- Grille options include stamped inlet and outlet grilles and multidirectional grilles. Aluminum fresh air boxes are also available.
- Appearance options include cabinet units with a durable, powder paint finish and decorative wall plate panels for hideaway units in Cupola White or Antique Ivory. Other colors such as Off White, Putty Beige and Soft Gray are available as specials. Custom colors can be matched as a special item. Leveling feet are available, as are rear cabinet extensions in 4 and 8-inch depths. Tamper- proof units are a selectable option, with 16-gauge steel panels, a return grille and key-operated, locking access doors.

For contractors

For contractors, ThinLine unit heaters feature Quick Ship options for fast delivery and a number of features that make installation fast and simple.

- Factory-mounted, wired and tested valve and piping packages for quick hookup to the building piping to reduce installation time. Packages can also be shipped loose with the unit for quick and easy field installation. Valve and piping packages are designed for entering-water-temperature sampling. This eliminates the need for inefficient bleed lines to sense automatic changeover on two-pipe units.
- Factory-mounted and tested controls minimize field setup. Depending on the option requested, controls can be wired with a 24 VAC transformer to provide a single-source power connection to the unit. Several options are available for unit or wall mounted thermostats and sensors. All wall-mounted thermostat and zone sensors require only low-voltage control wiring from the device to the unit control box.
- Easy, end-panel removal for hookup of electrical and piping connections minimizes field-labor time and cost.
- End compartment panels can be removed for installation and service without removing the front panel covering the fan blower section. This means that airflow through the filter and coil is not jeopardized for taking temperature and performance readings.
- Both the main drain pan and optional secondary drain pan are easily accessed for cleaning.
- The fan deck and motor assembly is easily removed when required for service.

Control Options

Manual 4-Position Fan Switch

Several styles of the four-position fan switch (Off, High, Med, Low) are available for unit-mount, remote- or wall-mount. The remote-mount option operates on low-voltage or line-voltage power and can be provided with a factory-mounted, low-voltage interface board, which contains (3) 24-volt relays with line-voltage contactors and terminal connections. The transformer is factory-installed and wired. The unit-mounted option operates on line voltage.

Sequence of operation

- *Off:* Fan is turned off. The two-position, motorized fresh-air damper, when supplied, is closed.
- *High, Medium, Low:* Fan runs continuously at the selected speed. The two-position, motorized fresh-air damper, when supplied, is opened.

Unit-Mounted, Analog Thermostat with 3-Position Fan Switch

This unit-mounted option combines the three-position fan switch with an analog thermostat (MT155). For two-pipe systems with a factory installed valve package, it can be provided with a manual switch (MTA-155) to change from heating, or cooling. Or changeover can be automatic (MTB-155).

Sequence of operation

Fan Switch

- Off: Fan is turned off. The two-position, motorized fresh-air damper, when supplied, is closed.
- High, Medium, Low: Fan runs continuously at the selected speed. The two-position, motorized fresh-air damper, when supplied, is opened.

Thermostat

- Cycles the valve(s) open or closed on demand based on occupant-desired level.

Changeover Switch:

- *Manual switch:* The user selects whether heating or cooling is desired. With automatic changeover, a pipe sensor works with the thermostat to operate the heating or cooling valve.
- *Heating:* Opens the valve when the temperature is below the setpoint.
- *Cool:* Opens the valve when the temperature is above the setpoint.

Digital Thermostats

Daikin offers a broad range of unit-mounted and remote, wall-mounted digital thermostats with the capability to control On-Off, 3-wire floating and proportional modulating actuator, and Normally-Closed or Normally-Open valves. See Table 1. For more information, refer to the Daikin publication ED 18513-1 and Installation Manuals for the specific thermostat (also see IM 980-1).

MT155 Thermostat

The MT155 series thermostat provides On-Off control for low-voltage or line-voltage valves and fan motors. It is remote- mounted. Options include manual or automatic changeover and three-speed fan control for continuous or cycling fan operation. This thermostat can be field-mounted on any unit equipped with a low voltage interface board, refer to Daikin publication IM 1089.

Three standard control options are available:

- *On-Off fan cycle operation only:* The thermostat cycles the fan from the manually-selected fan speed (High, Medium or Low) to Off.
- *Continuous fan and On-Off valve cycle operation:* The thermostat cycles the valves On and Off. The fan runs continuously at the manually selected fan speed.
- *On-Off fan and On-Off valve cycle operation:* The thermostat cycles the fan from the manually-selected fan speed to Off and it cycles the valves On and Off.

When the system switch is in the Off position, the fan coil system, including the fan, is shut off.

MT158 and MT168 Thermostat-Controllers with Digital Display

Series MT158 and MT168 microprocessor-based thermostat controllers combine a proportional integral (PI) control algorithm with adaptive logic. They can be unit-mounted or remote-wall mounted.

Heating and cooling outputs for the MT158 are individually configurable for three-wire floating control valves or On/Off valves in the Normally-Open (NO) or Normally-Closed (NC) modes.

Heating and cooling outputs for the MT168 provide 0-10 Vdc or 4-20 mA. An integrated, three-speed fan control switch is line-voltage capable to allow direct connection to the fan motors. A manual or automatic changeover is provided with remote setback capability from a time clock or facility management system. Features include a Fahrenheit or Celsius digital display and built-in purge cycling which assists the controller to determine if the system is supplying hot water or cooling.

Two standard control options are available:

- *Continuous fan and modulating (or On-Off) valve operation.* The fan runs continuously at the manually selected fan speed (High, Medium or Low). The controller modulates the valves or, on the MT158, dip-switches can be set to cycle the valves On and Off. Mainly used for unit-mount thermostats.
- *On-off fan cycle operation and modulating (or On-Off) valve operation.* The controller cycles the fan from the manually selected fan speed to Off. The controller modulates the valves or, on the MT158, dip-switches can be set to cycle the valves On and Off. Used for remote-mount thermostats or with a remote room temperature sensor.

T180 Programmable Thermostat

Daikin offers two different 7-Day Programmable Digital Heating/Cooling Thermostat with constant fan or Fan cycled, On/Off Valve Control depending on the fan speed control. The thermostat interface contains buttons for use in navigation to accompanying menus/screens and for performing specific operations. Detailed installation instructions and modes of operation can be found in IM 1152

Table 1: Thermostat Summary Table

Thermostat Type	Model	Mounting	Software Tabs
On/Off Switch with 3-speed Fan Switch with Hi/Med/Lo Settings and Switched Auxiliary Connection	MTE-155	Unit or Remote*	Control Type or Accessories
2-Pole Dead-Band Auto-Changeover Thermostat with Manual On-Off System Switch and Manual 3-Speed Fan Switch, On/Off Valve Control	MTB-155	Unit or Remote*	Analog Control Type or Accessories
Thermostat with Manual Heat-Off-Cool System Switch and Manual 3-speed Fan Switch, On/Off Valve Control	MTA-155	Unit or Remote*	Analog Control Type or Accessories
Digital Thermostat 24 vac/120-277 vac with 3-speed Fan Control (Continuous or Fan Cycle)	MTA-170	Remote	Accessories
Digital Thermostat with 7-Day Programmable, 24 vac/120-277 vac with 3-speed Fan Control (Continuous or Fan Cycle)	MTA-180	Remote	Accessories
Digital Thermostat 24 vac/120-277 vac with Staged Fan (Continuous or Fan Cycle)	MTB-170	Remote	Accessories
Digital Thermostat with 7-Day Programmable, 24 vac/120-277 vac with 3-speed Fan Control (Continuous or Fan Cycle)	MTB-180	Remote	Accessories
Digital Thermostat with Dead Band Auto-Changeover for Heating/Cooling. On/Off or 3-wire Floating Valve Control and 3-speed Fan Switch	MTB-158	Unit or Remote	Digital Control Type or Accessories
Digital Thermostat with Dead Band Auto-Changeover for Heating/Cooling, On/Off, and Manual 3-speed Fan Switch	MTA-158	Unit or Remote	Digital Control Type or Accessories
Digital Thermostat with Auto-Changeover, Dead-Band, 0-10 vDC Proportional Modulating Valve Control.	MTB-168	Unit or Remote	Digital Control Type or Accessories
Digital Thermostat with Auto-Changeover, Dead-Band, 0-10 vDC Proportional Modulating Valve Control, and Manual 3-speed Fan Switch	MTA-168	Unit or Remote	Digital Control Type or Accessories

*Can be field-mounted on units with Low Voltage Interface Boards, refer to IM1089

Low Voltage Interface Board

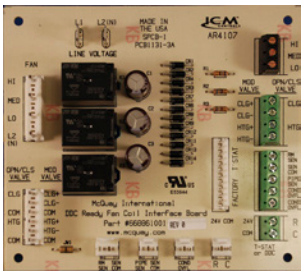

The Low-Voltage, Interface Board (LV board) is used with any remote (wall-mounted) Daikin thermostat. It can also be used with a BAS (Building Automation System) control where low voltage is needed to operate a fan coil.

The LV interface board includes:

- Three 24-volt relays with line voltage contactors to operate fan motor speeds
- A factory wired and installed transformer
- Terminal connections for interfacing to:
- An optional wall-mounted thermostat
- Low-voltage actuators for heating and cooling valves
- A return air sensor
- A pipe temperature sensor for changeover from heating to cooling on two-pipe systems
- An optional condensate overflow switch

Customer-Supplied Controls

Your Daikin representative can work with engineers and/or contractors to factory install and wire other manufacturers' DDC controllers in one of the end pockets of the fan coil. Contact your local Daikin representative for assistance with your specific project.

Unit Accessories

Decorative Wall Plate Option

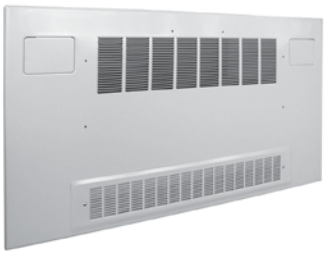

Decorative wall plates have rounded corners for an attractive appearance. Wall plate can be selected as an accessory in a variety of colors with front or top discharge. Custom colors may be available, Contact your Daikin Applications Group with inquiries. For Dimensions, see Figure 15 on page 24.

Cabinet Color Options

Exposed units are shipped in the standard color of Antique Ivory. Special colors include: Cupola White, Off White, Putty Beige and Soft Gray. For details of paint colors and finishes, refer to Daikin publication Form 2F-1188. Metal samples are available upon request.

Fresh Air Damper Options (Manual and Motorized)

A fresh air intake damper that will provide up to 25% fresh air can be ordered either as factory-installed or as a field-installed kit. The kit consists of an intake with damper blade and insect screen. The damper may be manually controlled through the return air opening or with an optional factory- or field-installed 24 V damper motor. If freezing air temperatures are expected, the damper must be closed or outside air must be tempered before entering the unit. A low-temperature sensor is recommended.

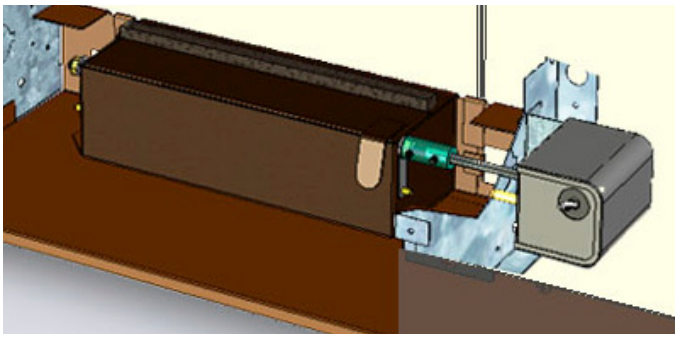

Fresh Air Intake Box Option

Fabricated of aluminum with weep holes, the Fresh Air Intake Box has a double set of louvers in series to prevent moisture draw-through. This is used with a fresh air damper and is mounted in an exterior wall. For Dimensions, see Figure 14 on page 24.

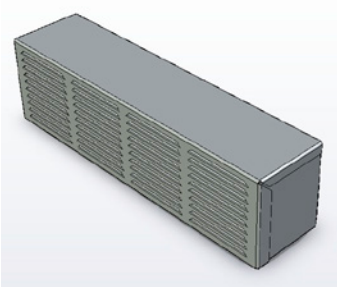

Condensate Overflow Switch Option

With proper mounting, the condensate overflow switch will detect water collecting in the primary drain pan before an overflow can occur. This is a N.C. low voltage switch that opens when water levels rise and closes when water is no longer present. The switch should be field-wired to a controller to facilitate the fan and/or control valve shut-down when condensate starts collecting in the drain pan.

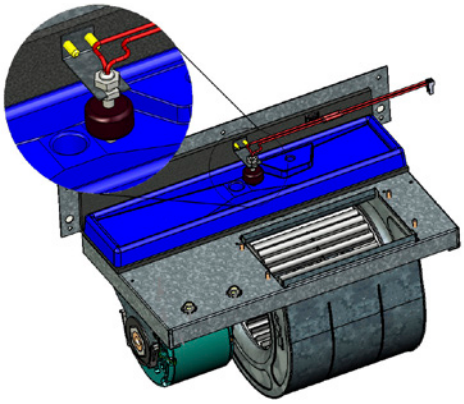

Tamperproof Cabinet Option

This option can be factory- or field-installed on cabinet units to prevent access to unit controls and unauthorized removal of cabinet panels. It includes a key lock access door to unit controls and torx head screws for cabinet panels. Stamped grille for return air is standard with tamper-proof models.

Return Air Grille

A stamped-steel return air grilles are available as factory- or field-installed options. This option is standard with tamper-proof models.

Leveling Legs Option

Field- or factory-installed kits are available with 0" to 1" adjustment for positive leveling of floor-mounted units.

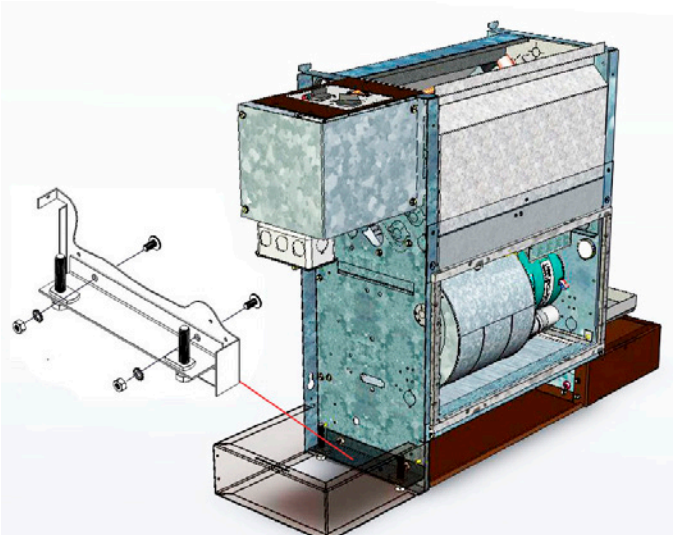

Extended End Pockets and Raised Sub-bases

Standard end pockets on Daikin units can accommodate most installation requirements. Therefore, extended pockets are seldom needed. However, units with 4" or 8" extensions on one or both sides of the unit are available. As a rule, a total extension of 8" is only possible. The extended end pockets are used for applications with field-installed valve piping packages or controls by others when extra space is needed. They can also be used for remodeling or replacement projects to hide floor covering terminations.

NOTE: When extended end pockets are used, a standard rear cabinet extension may not be usable. Call your Daikin Sales Representative for suggestions.

Raised sub-base options are also available. Contact your Daikin Sales representative for details.

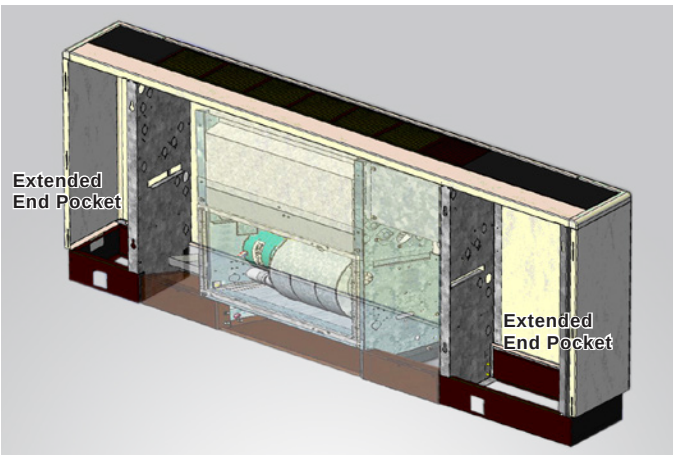

Rear Cabinet Extension Option

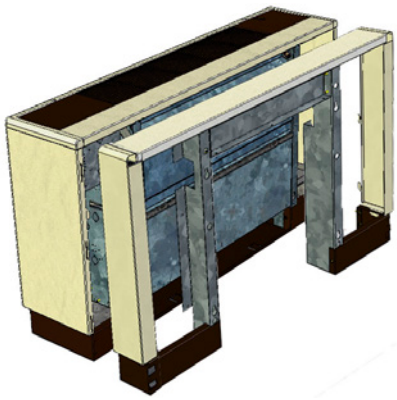

This kit is available for applications where additional depth is needed. This kit is not designed to be an air duct or outside air plenum. 4" or 8" extension kits are standard. Other extension depths are available as a special request. Contact your Daikin representative for details.

Some common applications for the rear cabinet extension include:

- Additional depth for unit appearance
- Additional clearance for cross-over piping and connections
- Extend the discharge grille past drapery or wall hangings
- Hide floor covering terminations in remodeling projects
- Piping entry through the side panels of the unit

NOTE: When extended end pockets are used, a standard rear cabinet extension may not be usable. Call Daikin Applications Group for suggestions.

Factory Valve & Piping Packages

Factory valve and piping packages are available for both two-pipe and four-pipe systems with either right or left hand connections. Four-pipe systems can be configured with the heating and cooling connections on the same or opposite sides of the unit. Packages can be either factory-installed or factory-assembled and shipped loose with the unit. Units are also available without valve and piping packages in either a right-hand or left-hand configurations. All packages are fully leak tested.

Factory-installed packages are sweated to the coil and wired to the unit control box or LV Interface Board. Chilled and hot water pipes are the only field connections required. Piping is 1/2" nominal copper (5/8" OD).

Pre-determined field connection points are located for easy access. See Figure 12, page 13 for connection locations. The installing contractor can pre-pipe the building water connections before the units arrive on the jobsite. A label clearly identifies chilled and hot water connection points on every unit.

Available Packages

Numerous piping packages are available to match design configurations. Additional components can be added to meet exact requirements, including P/T ports, unions, and flexible stainless steel hoses.

Shut-Off Only Packages

Shut-Off Only piping packages provide interconnecting copper piping and shut-off ball valves for ease in connecting supply and return lines to the unit. Four-pipe packages include a venting valve for the preheat or reheat coil. Primary coils on all units have an integral venting valve.

Figure 3: Shut-Off Only Package

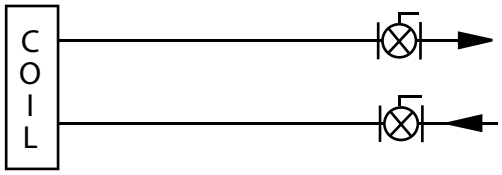

(See Figure 9 for components key)

Basic Packages

Basic valve and piping packages add control valves to the Shut-Off Only package. All Daikin control valves are factory-mounted in the supply water pipe. See "Control Valve Options" on page 13 for more information on the variety of control valves available.

Figure 4: Basic Package

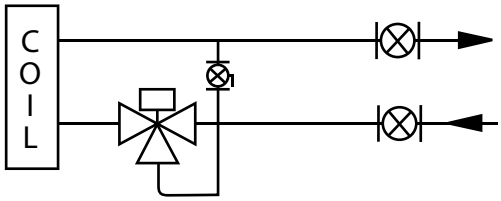

(See Figure 9 for components key)

Enhanced Packages

Enhanced valve and piping packages add a strainer to the Basic package supply water pipe. The strainer is attached to the supply water pipe at the coil connections. The strainer body is cast brass construction with a stainless steel mesh that is easy to remove for cleaning.

Figure 5: Enhanced Package

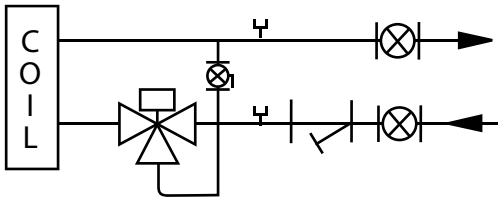

(See Figure 9 for components key)

Figure 6: Bypass Bleed Line

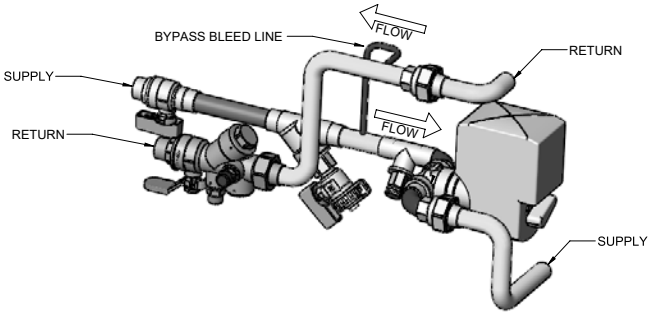

NOTE: A bypass bleed line is installed on all factory provided fan coil valve packages with a 2-way control valve to prevent stagnation of water near the changeover switch (aqua-stat)or changeover sensor (10K pipe sensor). The bleed line allows 3 – 4 gpm of flow to bypass the coil which is necessary for the proper function of the automatic changeover system. All valve packages, cooling and heating, with a 2-way control valve automatically include the bypass bleed line. If the bleed line is unwanted, it may be crimped by the installing contractor to prevent bypass flow.

Premium Packages

Premium valve and piping packages replace the Basic package a ball valve in the return line with a manual or automatic circuit setter. The manual circuit setter is also known as a manual flow control valve. The auto circuit setter acts as both a flow setting device and a shut-off valve. It allows water flow through the fan coil to be set quickly and accurately. The circuit setter includes a cartridge within the valve body that is sized to allow a specific flow rate through the coil without any action required by a system piping balancer.

P/T ports are included, which are used to measure the temperature or pressure drop across the valve. This pressure drop can be compared to factory supplied tables that relate the pressure drop to a specific flow rate. The manual circuit setter valve also has a memory stop so that the correct setting can be found quickly.

Figure 7: Premium Package

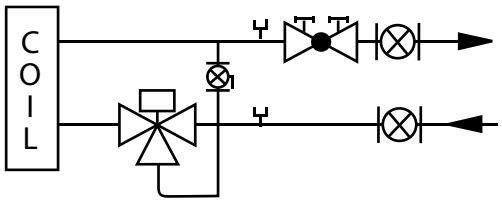

(See Figure 9 for components key)

Deluxe Packages

Deluxe valve and piping packages add a strainer to the Premium package. The strainer is available with or without an optional draining (blow-off) valve.

Figure 8: Deluxe Package

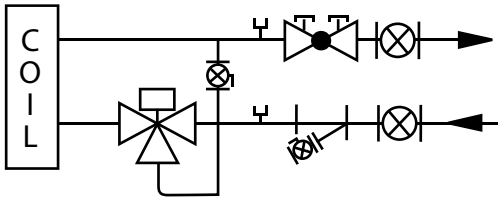

(See Figure 9 for components key)

Figure 9: Components Key for Schematics

		Manual Shutoff Ball Valve: Water shut-off. Handle rotates 90 degrees.
		Manual Shutoff Ball Valve with Memory Stop: Used on return line for limiting water flow.
		2-Way, N.C., On/Off Valve, Spring Return: Turn On or Off water flow to the coil in response to 24V or line voltage signal
		3-Way, N.C., On/Off Valve, Spring Return: Bypass water flow away from coil in response to 24V or line voltage signal. Includes fixed orifice for balancing.
MD		**2-Way Modulating Valve (3-wire or proportional):** Modulates water flow in response to 24V signal.
MD		**3-Way Modulating Valve (3-wire or proportional):** Modulates or bypass water flow in response to 24V signal. Includes fixed orifice for balancing.
		PT Port: For connecting a pressure or temperature gauge.
		Y-Strainer: Removable screen filters out small particles from supply line during normal system operation.
		Manually Adjustable Circuit Setter with Shutoff: Pressure-dependent, ball-type, manual flow control.
		Cartridge-Type, Auto-Fixed Circuit Setter: Pressure-compensated, automatic fixed-flow control.
		Union: For easy removal of piping from coil.
		Bypass Balancing Valve: Adjustable balancing of water flow through the bypass circuit on a 3-way control valve.

Note: Daikin 3-way valves are equipped with a fixed balance orifice in the bypass line, eliminating the need for a separate balancing valve

Control Valve Options

Except for Shut-off Only packages, all valve and piping packages include control valves for controlling water flow. All Daikin control valves are factory assembled and mounted in the supply water pipe downstream of the coil. Several options are available:

Two-Way/Two-Position Valves

These valves will be either Fully-Open or Fully-Closed in response to a line voltage (115, 208-230 or 265-277 VAC) or 24 VAC signal from the Daikin thermostat or controller. Some means of relieving pump head pressure should be applied when two-way valves are selected. Normally-Open or Normally-Closed valves are available, both spring-return type.

Three-Way Two-Position Valves

These valves either allow full water flow through the coil or divert the flow through a bypass line. The valves respond to a line voltage (115, 203-230 or 265-277 VAC) or to 24 VAC signal from the Daikin thermostat or controller. All standard three-way valves come with a fixed-balance orifice in a bypass line to compensate for flow balancing in the bypass position, eliminating the need for an additional balancing valve. Normally-Open or Normally-Closed valves are available.

Two-Way Modulating Valves

These valves modulate the water flow through the coil in response to a signal from the Daikin thermostat or controller. Standard Daikin modulating valves are three-wire floating point equal percentage valves. Zero to 10 VDC proportional valves are also available. The modulating valves are factory mounted in the supply water pipe upstream of the coil.

Three-Way Modulating Valves

These valves modulate water flow through a coil in response to a signal from a Daikin thermostat or controller. Three-way valves allow water that is directed through the coil to mix with water that is directed through the bypass line. This mixture exits through the leaving water pipe. Modulating valves are three-wire, floating-point equal percentage valves or 0-10 VDC proportional. The modulating valves are factory mounted in the supply water pipe upstream of the coil.

Selecting Correct Size Modulating Valves

Daikin Tools™ software automatically selects the best modulating valve size for the unit and coil being considered. By combining the ARI performance data, the coil flow rate and the DP across the water coil, the water coil Cv is calculated and the best matching modulating port size is selected. Valve and piping packages can easily be configured and automatically selected using Daikin Tools™.

Figure 10: Hook Up Locations: Factory-installed Valve & Piping Packages

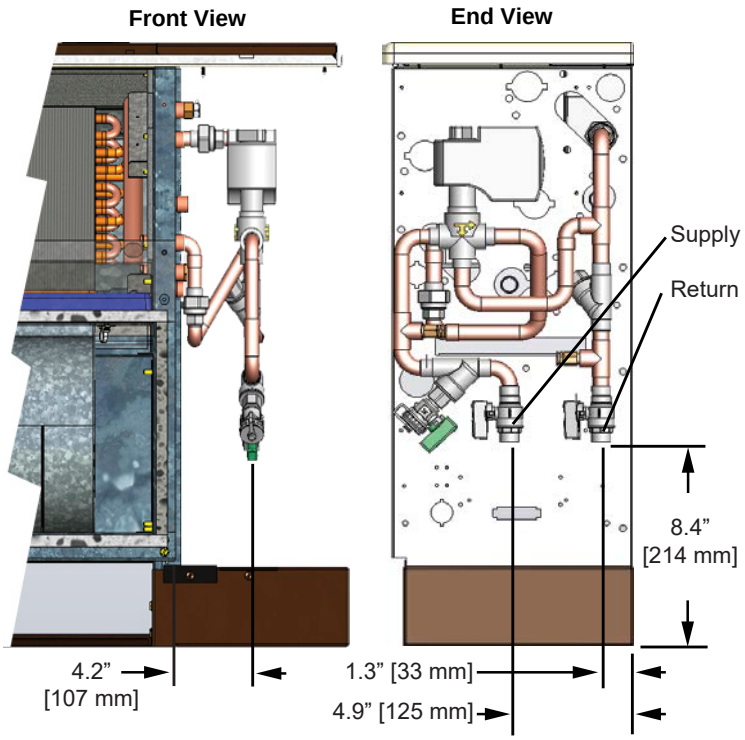

Deluxe valve packages are shown.

NOTE: All valve packages, regardless of components included, have the same hookup locations. RIght-hand connections are shown here. Left-hand connection distances are the same. Distances to connections from chassis are from unit mounting holes. Dimensions may vary slightly from given values.

To achieve an efficient unit heater system, accurate system design and proper equipment selection is necessary. Variations, limitations/control of unit heater systems, design conditions and design load calculations are not described in detail in this catalog. More detailed information may be found in the ASHRAE Guide. This catalog contains ARI-certified ratings and application ratings for ThinLine unit heater units from which a design engineer can make initial unit selections to meet system requirements.

A mechanical system designer must select the unit types best suited to the overall system before the actual unit sizes can be determined. The factors that generally influence this decision are: intended building usage, building layout, architectural and aesthetic values, economics, geographical location, and type of maintenance service available. The general results may be a mixture of unit types within a given system. McQuay International manufactures unit heater units to meet many needs including ThinLine, HiLine™ and Large Capacity models. For Daikin product information, please go to www.DaikinApplied.com.

Basic design data

Prior to selecting individual unit sizes, a design engineer must fix or determine the following factors:

- Inside and outside wet and dry bulb design temperatures
- Total and sensible heat gains and losses of the area to be served
- Ventilation air
- Properties of the heating and cooling medium
- Available electric power service
- Any special design requirements of the building or system

Unit Size

The capacity ratings presented in this catalog are provided for initial unit selection only. Water cooling and heating capacities, unit air flow, static pressure and glycol solutions are all incorporated into the program to provide the best possible selection. Consult your Daikin representative for a selection tailored to specific applications.

Unit sizes for the ideal system should be selected by calculating peak load requirements due to unusually high occupancy or severe climatic conditions and with fans operating at high speed. Ordinary day-to-day cooling and heating requirements are then achieved at low and medium speeds.

The initial unit selection should be checked for air volume in the design system and the cooling capacities checked against actual operating conditions. While units selected on the basis of sensible load will generally meet the total cooling load, total load should be checked in all cases.

Heating Performance - Hot Water Coil

All performance measured on high speed tap, 115 V, zero ESP, with a throwaway filter. Heating performance is based on 70°F (21°C) entering air temperature, 180°F (82°C) entering hot water temperature with a 30°F (17°C) DT.

Table 2: Heating performance

Unit Size	Coil Rows	SCFM	Heating Performance			
			TMBh (TkW)	Q/ITD	Gpm (L/s)	WPD Ft of H_2O (kPa)
02	2 Row	218	14.1 (4.1)	0.128 (0.067)	0.9 (0.06)	0.3 (0.9)
	3 Row	209	17.2 (5.0)	0.156 (0.082)	1.2 (0.08)	0.5 (1.5)
	4 Row	200	19.2 (5.6)	0.175 (0.092)	1.2 (0.08)	0.6 (1.8)
03	2 Row	299	19.8 (5.8)	0.180 (0.095)	1.1 (0.07)	0.4 (1.2)
	3 Row	291	24.4 (7.2)	0.222 (0.118)	1.5 (0.09)	0.5 (1.5)
	4 Row	265	27.2 (8.0)	0.247 (0.131)	1.9 (0.12)	1.5 (4.5)
04	2 Row	398	28.3 (8.3)	0.257 (0.136)	1.7 (0.11)	1.0 (3.0)
	3 Row	385	34.0 (10.0)	0.309 (0.164)	2.2 (0.14)	1.3 (3.9)
	4 Row	374	38.9 (11.4)	0.354 (0.187)	2.9 (0.18)	3.4 (10.2)
06	2 Row	602	41.0 (12.0)	0.373 (0.196)	2.9 (0.18)	4.4 (13.1)
	3 Row	565	47.1 (13.8)	0.428 (0.226)	3.7 (0.23)	5.2 (15.5)
	4 Row	554	52.6 (15.4)	0.478 (0.252)	4.6 (0.29)	9.0 (26.9)
08	2 Row	675	50.3 (14.7)	0.457 (0.241)	3.6 (0.23)	7.7 (23.0)
	3 Row	656	58.7 (17.2)	0.534 (0.281)	4.5 (0.28)	8.0 (23.9)
	4 Row	634	64.3 (18.8)	0.585 (0.308)	5.5 (0.35)	14.8 (44.2)
10	2 Row	831	62.4 (18.3)	0.567 (0.299)	4.4 (0.28)	6.8 (20.3)
	3 Row	808	73.2 (21.5)	0.665 (0.352)	5.7 (0.36)	8.7 (26.0)
	4 Row	795	80.8 (23.7)	0.735 (0.388)	6.7 (0.42)	11.1 (33.2)
12	2 Row	1118	78.3 (22.9)	0.712 (0.375)	5.6 (0.35)	12.5 (37.4)
	3 Row	1059	95.4 (28.0)	0.867 (0.458)	7.1 (0.45)	15.5 (46.3)
	4 Row	1022	103.8 (30.4)	0.944 (0.497)	8.3 (0.52)	18.3 (54.7)

Air Volume Capacity Data

Air volumes shown in the table are measured at the motor speeds indicated with 115v/60/1 electrical power, with a 1" throwaway filter installed, and with a stamped discharge grill on a vertical cabinet unit or a discharge duct collar on a hideaway unit at approximately 0.10 inch of pressure drop.

Table 3: SCFM, 115/60/1 motor (factor 88%)

Unit Size	Main Coil Rows	Heating Coil Rows	SCFM		
			Motor on High Speed	Motor on Medium Speed	Motor on Low Speed
02	2 Row	None	214	197	167
	3 Row	None	204	190	161
	4 Row	None	197	183	159
03	2 Row	None	296	264	211
	3 Row	None	292	256	205
	4 Row	None	283	253	206
04	2 Row	None	380	330	261
	3 Row	None	365	325	250
	4 Row	None	368	319	249
06	2 Row	None	600	524	421
	3 Row	None	559	483	373
	4 Row	None	554	486	409
08	2 Row	None	668	585	465
	3 Row	None	654	576	456
	4 Row	None	632	562	450
10	2 Row	None	831	712	548
	3 Row	None	807	696	536
	4 Row	None	789	680	523
12	2 Row	None	1110	995	840
	3 Row	None	1059	960	822
	4 Row	None	1025	930	803

Table 4: Approximate Air Volume for Units with ECM Motors for 3-Row Coils and External Static Pressure up to 0.2"

Size	Vertical		
	High	Medium	Low
02	214	195	172
03	309	262	209
04	395	308	240
06	621	502	417
08	834	554	462
10	1011	692	539
12	1244	1003	836

MCA (Minimum Circuit Ampacity), MOP (Maximum Overcurrent Protection) or MFS (Maximum Fuze Size) Calculations

The minimum circuit ampacity (MCA) is the minimum wire size required for a field-wired product. The maximum overcurrent protection (MOP), or maximum fuse size (MFS) is the maximum fuse or circuit breaker size required to properly protect the equipment.

Select a standard fuse size or HACR type circuit breaker equal to the MOP. Standard Fuse Sizes are: 15, 20, 25, 30, 35, 40, 45, 50, 60 amps. Use the next larger standard size if the MOP does not equal a standard size. See Table 6 through Table 8 for motor FLAs.

HACR (Heating, Air-Conditioning and Refrigeration) type circuit breakers are required in the branch circuit wiring for all unit heaters with electric heat.

Note: MCA and MOP ratings are based on the unit and electric heat power supply having the same voltage. If the electric heat power supply is different, a separate circuit breaker may be required. Follow local codes.

Heater Amps = (Heater kW x 1000)/Heater Voltage

Note: Use 120V heater voltage for 115V units. Use 240V heater voltage for 230V units.

MCA = 1.25 x (heater amps + all motor FLAs)

MOP or MFS = (2.25 x Largest Motor FLA) + Second Motor FLA + Heater Amps (If Applicable)

Electric Heaters

Table 5: Electric heat kW*

Unit Size	Unit Voltage	kW								
02	115	0.5	1.0	1.5						
	230	0.5	1.0							
	277	0.5	1.0	1.5						
	208	0.5	0.9							
03	115		1.0	1.5	2.0					
	230		1.0							
	277		1.0	1.5						
	208		0.9							
04	115		1.0	1.5	2.0					
	230		1.0	1.5	2.0					
	277		1.0	1.5	2.0					
	208		0.9	1.4	1.8					
06	115			1.5	2.0					
	230			1.5	2.0	2.5	3.0			
	277			1.5	2.0	2.5	3.0	4.0		
	208			1.4	1.8	2.3	2.7			
08	115				2.0					
	230				2.0	2.5	3.0	4.0		
	277				2.0	2.5	3.0	4.0		
	208				1.8	2.3	2.7	3.6		
10	115									
	230					2.5	3.0	4.0		
	277					2.5	3.0	4.0		
	208					2.3	2.7	3.6		
12	115									
	230						3.0	4.0	5.0	6.0
	277						3.0	4.0	5.0	6.0
	208						2.7	3.6	4.5	5.4

Note: *Electric heat MBh = (Heater kW) x(3.413)

Motor Electrical Data

Table 6: Electrical data - standard (free discharge) motor - 2 row coil

	Motor Speed	Size 2			Size 3			Size 4			Size 6			Size 8			Size 10			Size 12		
		Amps	Watts	RPM	Amps	Watts	RPM	Amps	Watts	RPM	Amps	Watts	RPM	Amps	Watts	RPM	Amps	Watts	RPM	Amps	Watts	RPM
115 V	High	0.49	53	1059	0.56	63	993	0.68	72	991	1.32	123	1122	1.20	129	1015	1.37	148	987	2.52	237	1123
	Med	0.42	44	984	0.48	53	886	0.57	59	876	0.99	95	987	1.01	108	910	1.16	124	866	1.81	175	1013
	Low	0.35	36	856	0.39	42	726	0.45	45	705	0.90	81	815	0.83	84	741	0.92	95	681	1.64	153	864
208 V	High	0.27	53	955	0.30	62	837	0.38	75	928	0.61	122	1102	0.77	154	1070	0.72	147	860	1.15	236	1113
	Med	0.23	48	766	0.24	52	639	0.30	59	764	0.44	87	910	0.58	48	709	0.58	120	681	0.83	166	960
	Low	0.19	39	561	0.19	42	485	0.25	49	611	0.36	65	691	0.50	39	504	0.45	93	533	0.70	127	708
230 V	High	0.27	57	1026	0.30	67	949	0.37	75	998	0.63	133	1124	0.80	180	1093	0.73	163	954	1.19	261	1131
	Med	0.23	52	914	0.25	60	791	0.31	64	880	0.41	89	1011	0.57	131	1006	0.61	139	797	0.81	178	1021
	Low	0.20	45	742	0.21	50	607	0.26	6	737	0.36	78	844	0.50	111	870	0.50	113	616	0.71	149	831
265 V	High	0.28	55	1026	0.29	61	931	0.34	77	917	0.47	117	1118	0.79	172	1097	0.65	149	906	0.95	246	1104
	Med	0.20	49	915	0.21	44	778	0.27	64	771	0.34	85	986	0.56	133	1007	0.50	126	737	0.74	188	933
	Low	0.16	41	758	0.16	43	597	0.20	46	609	0.30	69	836	0.47	114	882	0.38	99	594	0.63	152	737
277 V	High	0.29	57	1049	0.29	66	948	0.35	75	955	0.49	132	1125	0.81	183	1110	0.71	159	948	0.97	265	1115
	Med	0.22	51	953	0.22	58	788	0.27	65	820	0.34	86	1018	0.57	139	1030	0.51	135	791	0.72	196	968
	Low	0.16	44	827	0.17	47	625	0.21	56	682	0.30	72	890	0.47	120	924	0.39	108	638	0.64	159	793

Table 7: Electrical data - standard (free discharge) motor - 3 row coil

	Motor Speed	Size 2			Size 3			Size 4			Size 6			Size 8			Size 10			Size 12		
		Amps	Watts	RPM	Amps	Watts	RPM	Amps	Watts	RPM	Amps	Watts	RPM	Amps	Watts	RPM	Amps	Watts	RPM	Amps	Watts	RPM
115 V	High	0.48	52	1067	0.55	62	1005	0.68	72	994	1.29	121	1120	1.20	129	1018	1.37	149	992	2.48	231	1127
	Med	0.41	43	1007	0.48	53	899	0.57	59	876	1.01	96	976	1.01	108	915	1.15	124	871	1.76	169	1029
	Low	0.34	35	889	0.39	42	722	0.45	45	700	0.89	80	783	0.83	84	749	0.91	95	689	1.60	149	895
208 V	High	0.26	52	962	0.29	62	847	0.38	75	931	0.60	120	1100	0.77	154	1073	0.72	148	865	1.13	230	1117
	Med	0.22	46	784	0.24	52	648	0.30	59	764	0.45	88	900	0.58	48	713	0.57	119	685	0.81	160	975
	Low	0.18	38	583	0.19	42	482	0.25	49	607	0.36	64	664	0.50	39	509	0.45	93	539	0.68	124	733
230 V	High	0.26	55	1034	0.29	66	960	0.37	75	1001	0.62	131	1122	0.80	179	1096	0.72	163	959	1.17	254	1135
	Med	0.22	50	935	0.25	59	803	0.31	64	880	0.42	90	1000	0.57	130	1011	0.60	138	802	0.79	172	1037
	Low	0.19	44	771	0.21	50	604	0.26	6	732	0.36	77	811	0.50	111	879	0.49	113	624	0.69	145	861
265 V	High	0.27	54	1034	0.28	61	942	0.34	77	920	0.46	115	1116	0.79	172	1100	0.65	150	911	0.93	240	1108
	Med	0.20	47	936	0.21	44	789	0.27	64	771	0.35	86	975	0.56	133	1012	0.49	126	742	0.72	182	948
	Low	0.16	41	787	0.17	44	594	0.20	46	605	0.30	68	803	0.47	114	891	0.38	99	601	0.61	148	763
277 V	High	0.28	56	1057	0.29	65	959	0.35	75	958	0.48	130	1123	0.81	183	1113	0.70	159	953	0.95	258	1119
	Med	0.21	49	975	0.22	58	800	0.27	65	820	0.35	87	1007	0.57	139	1035	0.51	134	796	0.70	189	983
	Low	0.16	43	859	0.17	48	622	0.21	56	677	0.30	71	855	0.47	120	933	0.39	108	646	0.62	155	821

Table 8: Electrical data - standard (free discharge) motor - 4 row coil

	Motor Speed	Size 2			Size 3			Size 4			Size 6			Size 8			Size 10			Size 12		
		Amps	Watts	RPM	Amps	Watts	RPM	Amps	Watts	RPM	Amps	Watts	RPM	Amps	Watts	RPM	Amps	Watts	RPM	Amps	Watts	RPM
115 V	High	0.48	52	1069	0.54	61	1019	0.68	71	1002	1.28	118	1127	1.17	126	1027	1.36	152	993	2.46	228	1131
	Med	0.41	43	1007	0.47	52	923	0.57	59	890	0.93	88	1017	0.98	105	935	1.15	123	863	1.73	166	1036
	Low	0.34	35	888	0.38	41	779	0.45	45	712	0.86	77	873	0.81	83	769	0.91	94	684	1.57	147	909
208 V	High	0.26	52	964	0.29	60	859	0.38	74	938	0.60	117	1107	0.75	150	1083	0.71	151	865	1.12	227	1121
	Med	0.22	46	784	0.23	50	665	0.30	59	776	0.41	81	938	0.56	47	729	0.57	118	678	0.80	157	982
	Low	0.18	38	582	0.19	41	520	0.25	49	617	0.35	62	740	0.48	39	523	0.45	92	535	0.67	122	744
230 V	High	0.26	55	1036	0.29	64	973	0.37	74	1009	0.62	128	1129	0.78	175	1106	0.72	166	959	1.16	251	1139
	Med	0.22	50	935	0.24	58	824	0.31	64	894	0.39	83	1042	0.55	127	1034	0.60	137	795	0.78	169	1044
	Low	0.19	44	770	0.20	49	652	0.26	6	745	0.35	74	904	0.49	110	903	0.49	112	619	0.68	143	874
265 V	High	0.27	54	1036	0.28	59	955	0.34	76	927	0.46	112	1123	0.77	167	1110	0.65	153	911	0.92	237	1112
	Med	0.20	47	936	0.21	42	810	0.27	64	783	0.32	79	1016	0.55	130	1034	0.49	125	735	0.71	179	954
	Low	0.16	40	786	0.16	43	641	0.20	46	615	0.29	65	895	0.45	113	915	0.37	98	597	0.60	146	775
277 V	High	0.28	56	1059	0.28	63	972	0.35	74	966	0.48	127	1130	0.79	178	1123	0.70	162	953	0.94	255	1123
	Med	0.21	49	975	0.21	56	821	0.27	65	833	0.32	80	1049	0.55	136	1058	0.51	133	789	0.69	186	990
	Low	0.16	42	858	0.17	46	671	0.21	56	689	0.29	68	953	0.46	119	959	0.39	106	641	0.61	153	834

Unit Data

Table 9: Unit data

	Unit Size						
	02	03	04	06	08	10	12
Coil Data							
Face Area, ft² (cm²)	0.74 (685)	1.08 (1004)	1.43 (1323)	2.11 (1962)	2.46 (2281)	3.14 (2917)	3.83 (3559)
Fins/inch (cm)	12 (4.7)	12 (4.7)	12 (4.7)	12 (4.7)	12 (4.7)	12 (4.7)	12 (4.7)
Coil Dimensions							
2-Row L × D × H, in (cm	11.8 × 1.7 × 9 (30.0 × 4.4 × 22.9)	17.3 × 1.7 × 9 (43.9 × 4.4 × 22.9)	22.8 × 1.7 × 9 (57.9 × 4.4 × 22.9)	33.8 × 1.7 × 9 (85.9 × 4.4 × 22.9)	39.3 × 1.7 × 9 (99.8 × 4.4 × 22.9)	50.2 × 1.7 × 9 (127.6 × 4.4 × 22.9)	61.3 × 1.7 × 9 (155.7 × 4.4 × 22.9)
3-Row L × D × H, in (cm	11.8 × 2.6 × 9 (30 × 6.6 × 22.9)	17.3 × 2.6 × 9 (43.9 × 6.6 × 22.9)	22.8 × 2.6 × 9 (57.9 × 6.6 × 22.9)	33.8 × 2.6 × 9 (85.9 × 6.6 × 22.9)	39.3 × 2.6 × 9 (99.8 × 6.6 × 22.9)	50.2 × 2.6 × 9 (127.6 × 6.6 × 22.9)	61.3 × 2.6 × 9 (155.7 × 6.6 × 22.9)
4-Row L × D × H, in (cm	11.8 × 3.5 × 9 (30.0 × 8.8 × 22.9)	17.3 × 3.5 × 9 (43.9 × 8.8 × 22.9)	22.8 × 3.5 × 9 (57.9 × 8.8 × 22.9)	33.8 × 3.5 × 9 (85.9 × 8.8 × 22.9)	39.3 × 3.5 × 9 (99.8 × 8.8 × 22.9)	50.2 × 3.5 × 9 (127.6 × 8.8 × 22.9)	61.3 × 3.5 × 9 (155.7 × 8.8 × 22.9)
Connection Size	1/2" Nominal Copper (5/8" OD)						
Volume, Gal (Liters)							
2-Row	0.15 (0.6)	0.19 (0.7)	0.24 (0.9)	0.32 (1.2)	0.37 (1.4)	0.46 (1.7)	0.55 (2.1)
3-Row	0.20 (0.7)	0.26 (1.0)	0.32 (1.2)	0.45 (1.7)	0.52 (2.0)	0.64 (2.4)	0.77 (2.9)
4-Row	0.26 (1.0)	0.34 (1.3)	0.43 (1.6)	0.61 (2.3)	0.70 (2.6)	0.87 (3.3)	1.05 (4.0)
Fan/Motor Data							
Fan Quantity	1	1	2	2	3	4	4
Size, Dia" × W" (cm)	6.26 × 6.3 (15.9 × 16)	7.95 × 6.3 (20 × 16)	6.26 × 6.3 (15.9 × 16)	7.95 × 6.3 (20 × 16)	6.26 × 6.3 (15.9 × 16)	6.26 × 6.3 (15.9 × 16)	7.95 × 6.3 (20 × 16)
Motor Quantity	1	1	1	1	2	2	2
Filter Data							
Part Number	668332901	668332902	668332903	668332907	668332905	668332906	668332904
1" (25.4 cm) Media	Throw-away	Throw-away	Throw-away	Throw-away	Throw-away	Throw-away	Throw-away
Quantity	1	1	1	1	2	2	2
L × D × H, in. (cm)	16 × 8.75 × 1 (40.6 × 22 × 2.5)	21.5 × 8.75 × 1 (54.6 × 22 × 2.5)	27 × 8.75 × 1 68.5 × 22 × 2.5	38 × 8.75 × 1 (96.5 × 22 × 2.5)	21.7 × 8.75 × 1 (56.1 × 22 × 2.5)	27.2 × 8.75 × 1 (69.0 × 22 × 2.5)	32.7 × 8.75 × 1 (83.1 × 22 × 2.5)

*Table 10: Approximate shipping weights - lbs (kg)**

Unit Type	Unit Size						
	S02	S03	S04	S06	S08	S10	S12
FHVC, FHVS	84 (38)	95 (43)	108 (49)	131 (60)	152 (69)	177 (80)	202 (92)
FHVH, FHVI	55 (25)	63 (29)	74 (34)	91 (41)	110 (50)	129 (59)	149 (68)

Note: *Approximate shipping weights do not include valve packages or other options

Unit Dimensions

Figure 11: Dimensions: flat top unit heaters

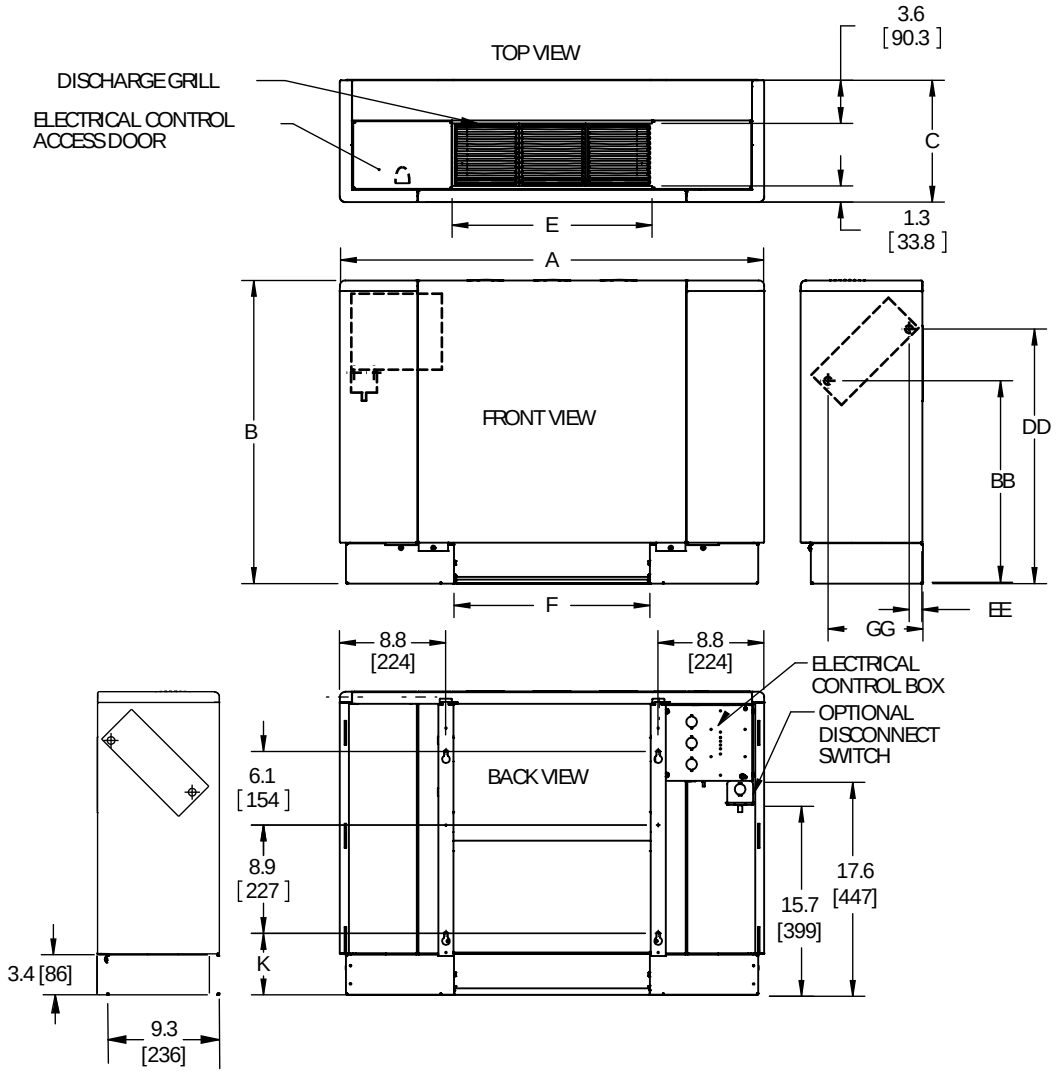

Dimension		S02		S03		S04		S06		S08		S10		S12	
		inch	mm	inch	mm	inch	mm	inch	mm	inch	mm	inch	mm	inch	mm
Unit Width	A	35.0	889	40.5	1029	46.0	1168	57.0	1448	62.5	1588	73.5	1867	84.5	2146
Unit Height	B	25.0	635	25.0	635	25.0	635	25.0	635	25.0	635	25.0	635	25.0	635
Unit Depth	C	10.0	254	10.0	254	10.0	254	10.0	254	10.0	254	10.0	254	10.0	254
Discharge Grille - Width	E	16.3	414	21.8	554	27.3	693	38.3	973	43.8	1113	54.8	1392	65.8	1671
Return Air Opening - Width	F	16.2	411	21.7	551	27.2	691	38.2	970	43.7	1110	54.7	1389	65.7	1669
Floor to Bottom Mtg Hole	K	5	127	5	127	5	127	5	127	5	127	5	127	5	127
Water Supply	BB	16.7	424	16.7	424	16.7	424	16.7	424	16.7	424	16.7	424	16.7	424
	GG	7.8	198	7.8	198	7.8	198	7.8	198	7.8	198	7.8	198	7.8	198
Water Return	DD	21	533	21	533	21	533	21	533	21	533	21	533	21	533
	EE	1.1	28	1.1	28	1.1	28	1.1	28	1.1	28	1.1	28	1.1	28
Fresh Air Damper Width	J	10	254	10	254	16	406	16	406	32	813	32	813	32	813

Figure 12: Dimensions: slope top unit heaters

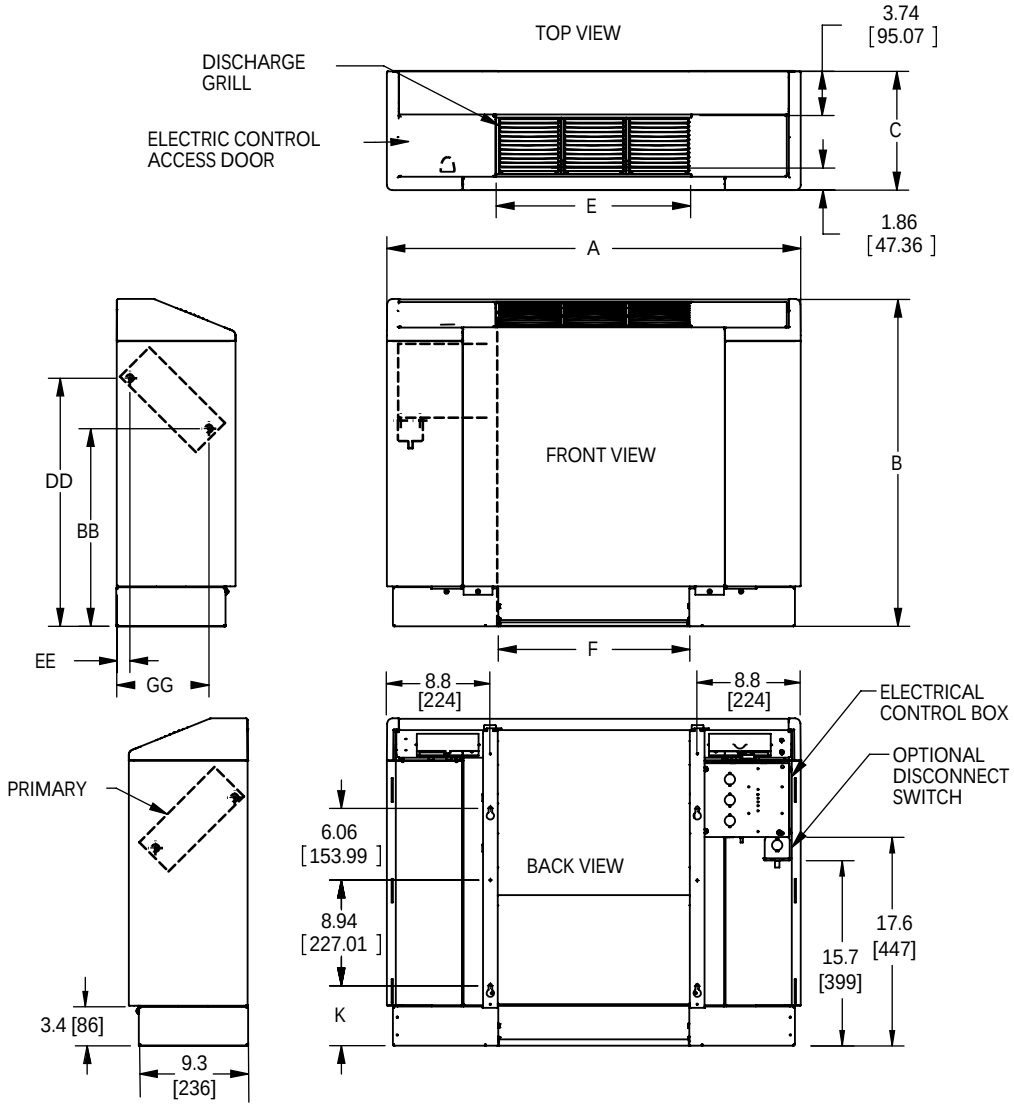

Dimension		S02		S03		S04		S06		S08		S10		S12	
		inch	mm	inch	mm	inch	mm	inch	mm	inch	mm	inch	mm	inch	mm
Unit Width	A	35.0	889	40.5	1029	46.0	1168	57.0	1448	62.5	1588	73.5	1867	84.5	2146
Unit Height	B	27.6	701	27.6	701	27.6	701	27.6	701	27.6	701	27.6	701	27.6	701
Unit Depth	C	10.0	254	10.0	254	10.0	254	10.0	254	10.0	254	10.0	254	10.0	254
Discharge Grille - Width	E	16.3	414	21.8	554	27.3	693	38.3	973	43.8	1113	54.8	1392	65.8	1671
Return Air Opening - Width	F	16.2	411	21.7	551	27.2	691	38.2	970	43.7	1110	54.7	1389	65.7	1669
Floor to Bottom Mtg Hole	K	5	127	5	127	5	127	5	127	5	127	5	127	5	127
Water Supply	BB	16.7	424	16.7	424	16.7	424	16.7	424	16.7	424	16.7	424	16.7	424
	GG	7.8	198	7.8	198	7.8	198	7.8	198	7.8	198	7.8	198	7.8	198
Water Return	DD	21	533	21	533	21	533	21	533	21	533	21	533	21	533
	EE	1.1	28	1.1	28	1.1	28	1.1	28	1.1	28	1.1	28	1.1	28
Fresh Air Damper Width	J	10	254	10	254	16	406	16	406	32	813	32	813	32	813

Figure 13: Dimensions: hideaway, front-discharge unit heaters

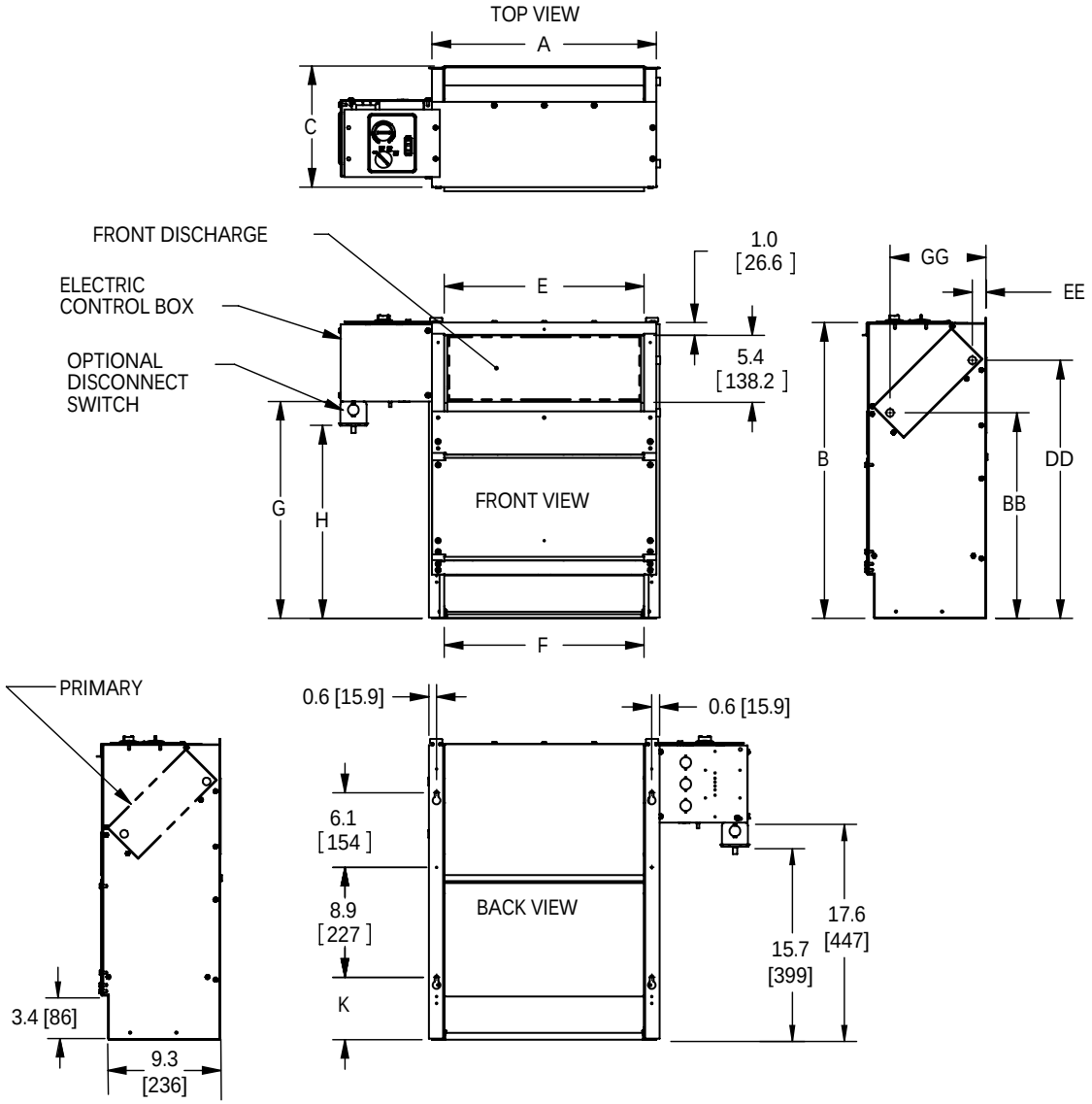

Dimension		S02		S03		S04		S06		S08		S10		S12	
		inch	mm	inch	mm	inch	mm	inch	mm	inch	mm	inch	mm	inch	mm
Unit Width	A	18.8	475	24.3	617	29.8	757	40.8	1036	46.3	1176	57.3	1455	68.3	1735
Unit Height	B	24.0	610	24.0	610	24.0	610	24.0	610	24.0	610	24.0	610	24.0	610
Unit Depth	C	9.6	243	9.6	243	9.6	243	9.6	243	9.6	243	9.6	243	9.6	243
Discharge Grille - Width	E	16.3	414	21.8	554	27.3	693	38.3	973	43.8	1113	54.8	1392	65.8	1671
Return Air Opening - Width	F	16.2	411	21.7	551	27.2	691	38.2	970	43.7	1110	54.7	1389	65.7	1669
Floor to Bottom Mtg Hole	K	5	127	5	127	5	127	5	127	5	127	5	127	5	127
Water Supply	BB	16.7	424	16.7	424	16.7	424	16.7	424	16.7	424	16.7	424	16.7	424
	GG	7.8	198	7.8	198	7.8	198	7.8	198	7.8	198	7.8	198	7.8	198
Water Return	DD	21	533	21	533	21	533	21	533	21	533	21	533	21	533
	EE	1.1	28	1.1	28	1.1	28	1.1	28	1.1	28	1.1	28	1.1	28
Fresh Air Damper Width	J	10	254	10	254	16	406	16	406	32	813	32	813	32	813

Table 11: Dimensions: hideaway, top-discharge unit heaters

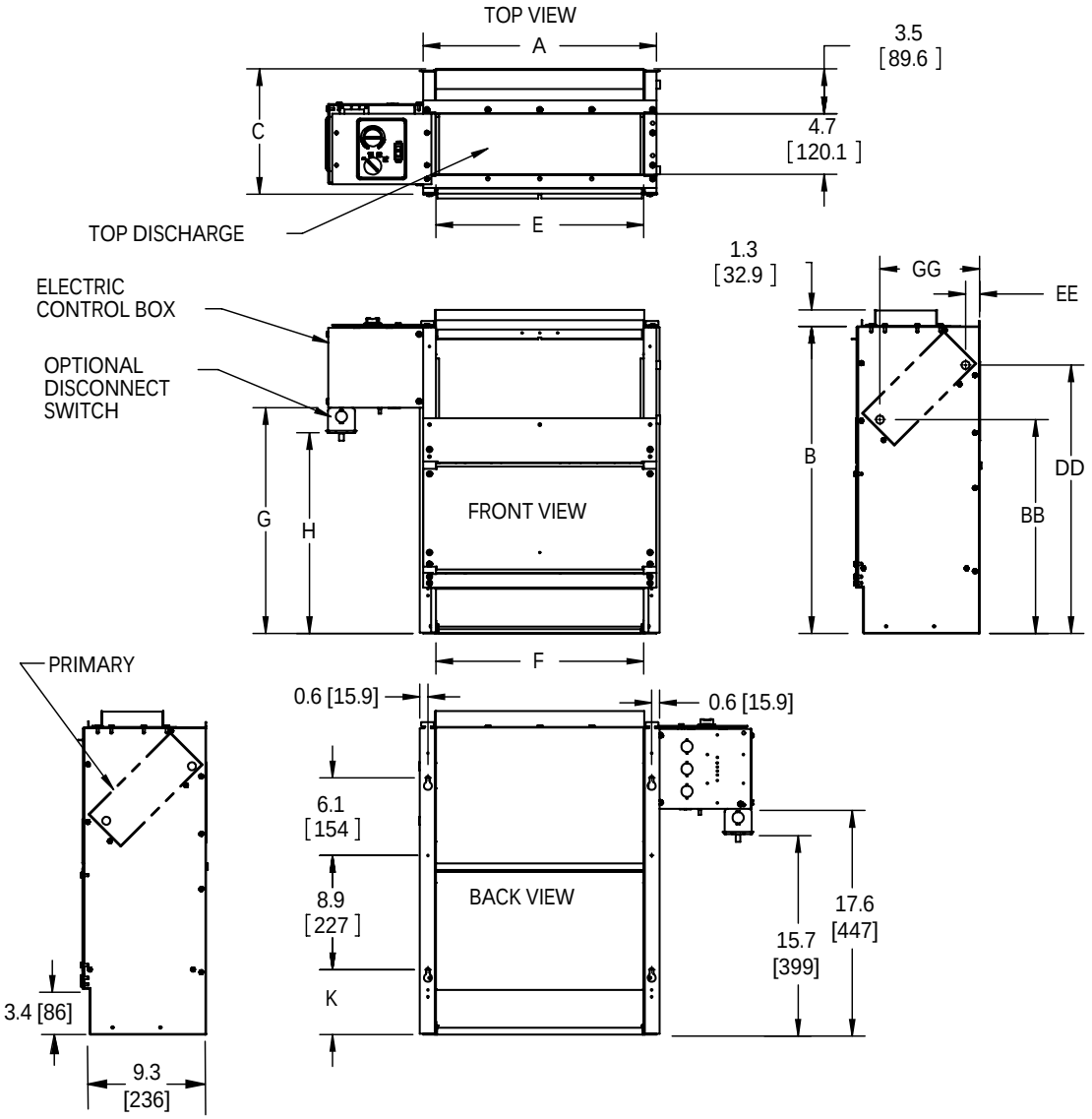

Dimension		S02		S03		S04		S06		S08		S10		S12	
		inch	mm	inch	mm	inch	mm	inch	mm	inch	mm	inch	mm	inch	mm
Unit Width	A	18.8	475	24.3	617	29.8	757	40.8	1036	46.3	1176	57.3	1455	68.3	1735
Unit Height	B	24.0	610	24.0	610	24.0	610	24.0	610	24.0	610	24.0	610	24.0	610
Unit Depth	C	9.6	243	9.6	243	9.6	243	9.6	243	9.6	243	9.6	243	9.6	243
Discharge Grille - Width	E	16.3	414	21.8	554	27.3	693	38.3	973	43.8	1113	54.8	1392	65.8	1671
Return Air Opening - Width	F	16.2	411	21.7	551	27.2	691	38.2	970	43.7	1110	54.7	1389	65.7	1669
Floor to Bottom Mtg Hole	K	5	127	5	127	5	127	5	127	5	127	5	127	5	127
Water Supply	BB	16.7	424	16.7	424	16.7	424	16.7	424	16.7	424	16.7	424	16.7	424
	GG	7.8	198	7.8	198	7.8	198	7.8	198	7.8	198	7.8	198	7.8	198
Water Return	DD	21	533	21	533	21	533	21	533	21	533	21	533	21	533
	EE	1.1	28	1.1	28	1.1	28	1.1	28	1.1	28	1.1	28	1.1	28
Fresh Air Damper Width	J	10	254	10	254	16	406	16	406	32	813	32	813	32	813

Decorative Wall Plate Dimensions

Figure 14: Wall plate dimensions and kit part numbers

Unit Size	Inches (mm)		Kit Part Number	
	Wall Plate	Recommended Wall Opening	Front Discharge	Top Discharge
02	37.25 × 28.81 (946 × 732)	34 × 26 (864 × 660)	668114901	668114908
03	42.75 × 28.81 (1086 × 732)	40 × 26 (1016 × 660)	668114902	668114909
04	48.25 × 28.81 (1226 × 732)	45 × 26 (1143 × 660)	668114903	668114910
06	59.25 × 28.81 (1505 × 732)	56 × 26 (1422 × 660)	668114904	668114911
08	64.75 × 28.81 (1645 × 732)	62 × 26 (1575 × 660)	668114905	668114912
10	75.75 × 28.81 (1924 × 732)	72 × 26 (1828 × 660)	668114906	668114913
12	86.75 × 28.81 (2203 × 732)	84 × 26 (2134 × 660)	668114907	668114914

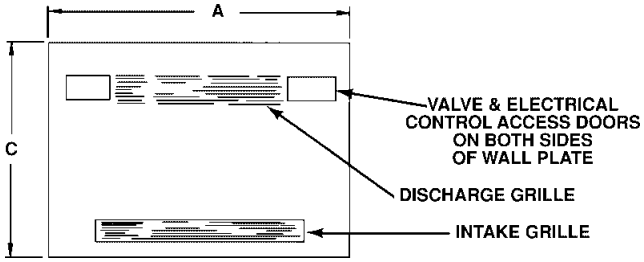

Wall Mounted (Four Side Overlap)

NOTE: Wall plate is designed for use with ThinLine vertical hideaway units mounted a minimum of 1.5 inches (38 mm) above the floor. Wall plates for Size 08, 10 and 12 units are in two sections. For installation instructions, see Daikin IM 1022

Fresh Air Intake Box Dimensions

Figure 15: Fresh air intake box dimensions

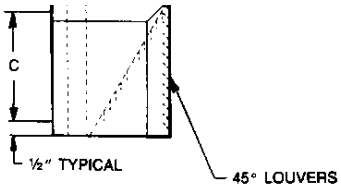

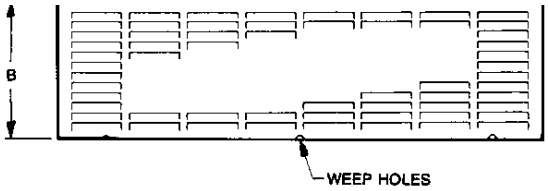

STYLE	DIMENSIONS (INCHES)		
	A	B	C

Style	Dimensions (Inches)		
	A	B	C
2 Brick × 2 Brick	16 ¾	4 ¾	3 ¾
4 Brick × 4 Brick	33 ½	4 ¾	3 ¾

PART 1: GENERAL

1.01 SECTION INCLUDES

A. Vertical Fan Coil

1.02 REFERENCES

A. Load Ratings and Fatigue Life for Ball Bearings.
B. Standards Handbook.
C. Laboratory Methods of Testing Fans for Rating Purposes.
D. Test Code for Sound Rating Air Moving Devices.
E. Test Methods for Louver, Dampers, and Shutters.
F. Room Fan Coil Unit.
G. Standard Practice for Operating Salt Spray Apparatus.
H. Motors and Generators.
I. National Electrical Code.
J. HVAC Duct Construction Standards - Metal and Flexible
K. Test for Surface Burning Characteristics of Building Materials.
L. Test Performance of Air Filter Units.
M. Standard for Heating and Cooling Equipment.
N. Test for Flammability of Plastic Materials for Parts in Devices and Appliances.

1.03 SUBMITTALS

A. Shop Drawings: Indicate assembly, unit dimensions, weight loading, required clearances, construction details, field connection details, and electrical characteristics and connection requirements.
B. Product Data
   1. Provide literature that indicates dimensions, weights, capacities, ratings, fan performance, gauges and finishes of materials, and electrical characteristics and connection requirements.

1.04 OPERATION AND MAINTENANCE DATA

A. Maintenance Data: Include instructions for lubrication and filter replacement.

1.05 QUALIFICATIONS

A. Manufacturer: Company specializing in manufacturing Air Handler products specified in this section must show a minimum five years documented experience and complete catalog data on total product.

1.06 DELIVERY, STORAGE, AND HANDLING

A. Deliver, store, protect and handle products to site.
B. Accept products on site wrapped in protective cardboard wrap. Inspect for damage.
C. Store in a clean dry place and protect from weather and construction traffic. Handle carefully to avoid damage.

1.07 ENVIORMENTAL REQUIREMENTS

A. Do not operate units for any purpose, temporary or permanent, until ductwork is clean, filters are in place, bearings lubricated, and fan has been test run under observation.

PART 2: PRODUCTS

2.01 ACCEPTABLE MANUFACTURERS

A. The following manufacturers are approved for use. No substitutions.
   1. Daikin Applied - ‘ThinLine 3G’ Fan Coil is the basis of design, including standard product features and all special features required per plans and specifications.
   2. ETI
   3. Greenheck

2.02 FAN COIL TYPE AND ARRANGEMENT

A. The fan coil shall be furnished as a draw-through cooling coil with a heating coil in preheat/reheat position.

2.03 CABINET

A. Unit shall be supplied with powder coat painted cabinet. Finish must meet ASTM B117 specifications (salt spray test).
B. Unit shall be supplied with a decorative wall plate with powder coat paint. Finish must meet ASTM B117 specifications (salt spray test).

2.04 GENERAL CONSTRUCTION

A. Hideaway

2.05 SUPPLY FAN

A. Supply fans shall be a DWDI forward-curved type. Fan assemblies including fan, motor and sheaves shall be dynamically balanced by the manufacturer on all three planes at all bearing supports. Manufacturer must ensure maximum fan RPM is below the first critical speed.
B. The complete fan assembly, including motor and main drain pan shall be easily removable.

C. Units shall be certified in accordance with the Room Fan Coil Unit certification program that is based on ARI Standard 440.

D. An ECM blower motor shall be provided on all units. Factory motor wiring shall be set for optimum fan performance. The unit shall be shipped at one fixed setting. The ECM motor shall utilize a permanent magnet rotor, which is connected to the shaft through resilient rings to absorb high frequency torque ripple. ECM motor shall be programmed for constant CFM or constant torque.

E. ECM blower motor shall be 3 speeds, single phase with means for proportional field adjustment of each speed.

2.06 ELECTRICAL

A. Supply fans shall be driven by permanent split-capacitor motors that are run-tested in the assembled unit and permanently lubricated. All motors shall have integral thermal overload protection with a maximum ambient operating temperature of 104°F. Motors shall be capable of starting at 78 percent of rated voltage and operating at 90 percent of rated voltage on all speed settings. Motors can operate up to 10 percent overvoltage.

B. Motor wires shall include a quick-disconnect motor plug.

2.07 COOLING AND HEATING

A. Cooling Coils

1. Cooling performance shall be as specified on the unit schedule.
2. Water coil fins shall have full drawn collars to provide a continuous surface cover over the entire tube for maximum heat transfer. Seamless copper tubes shall be mechanically expanded into the fins to provide a continuous primary-to-secondary compression bond over the entire finned length for maximum heat transfer rates. Bare copper tubes shall not be visible between fins. Coil casing shall be constructed of galvanized steel.
3. Water coils shall be provided with headers of seamless copper tubing with intruded tube holes to permit expansion and contraction without creating undue stress or strain. Coil connections shall be copper sweat connections with connection size to be determined by manufacturer based upon the most efficient coil circuiting. Vent and drain connections shall be furnished on the coil connection, external to the cabinet. Vent connections provided at the highest point to assure proper venting. Drain connections shall be provided at the lowest point.
4. All steel parts exposed to moisture shall be galvanized.
5. Unit shall include a noncorrosive, ABS main drain pan, positively sloped in every plane and insulated with closed-cell insulation. The drain pan shall be designed to ensure no pooling of condensate water per ASHRAE 62.2.
6. Water coils shall not exceed an internal pressure of 500 psig.

B. Water/Steam Heating Coil

1. Heating performance shall be as specified on the unit schedule.
2. Coil fins shall have full drawn collars to provide a continuous surface cover over the entire tube for maximum heat transfer. Seamless copper tubes shall be mechanically expanded into the fins to provide a continuous primary-to-secondary compression bond over the entire finned length for maximum heat transfer rates. Bare copper tubes shall not be visible between fins.
3. Coils shall be provided with headers of seamless copper tubing with intruded tube holes to permit expansion and contraction without creating undue stress or strain. Coil connections shall be copper sweat connections with connection size to be determined by manufacturer based upon the most efficient coil circuiting. Vent and drain connections shall be furnished on the coil connection, external to the cabinet. Vent connections shall be provided at the highest point to ensure proper venting. Drain connections shall be provided at the lowest point.
4. Water coils shall not exceed an internal pressure of 500 psig.
5. Steam coils shall not exceed an internal pressure of 150 psig.

2.08 VALVE PACKAGES

A. Fan coil units shall be provided with factory-installed valve / piping package(s)available for the primary and secondary coils. All piping packages shall be factory assembled and tested at 400 psig (2760 kPa) and re-tested for leak when factory soldered to the coil(s) at 300 psig (2069 kPa) Maximum Working Pressure of the piping package shall be 300 psig (2069 kPa).

B. The valve package shall be designed so that any condensation is directed into the secondary drain pan. With the secondary drain pan provided, insulation of the piping package is not required.

C. The valve package shall be provided with:

1. Interconnecting copper piping and shut-off ball valves.
2. Connecting supply and return lines to the unit. Four-pipe packages shall include a venting valve for the preheat or reheat coil.

3. A manual circuit setter in the supply water pipe. The circuit setter acts as both a flow-setting device and a shut-off valve. It allows water flow through the fan coil to be set quickly and accurately. The valve shall have a memory stop so that the correct setting can be found quickly.
4. An automatic circuit setter. The circuit setter includes a cartridge within the valve body that is sized to allow a specific flow rate through the coil. This valve sets flow through the coil without any action required by a system piping balancer.
5. P/T ports to measure the temperature or pressure drop across the valve. This pressure drop can be compared to factory-supplied curves that relate the pressure drop to a specific flow rate.
6. Unions at the coil connections.
7. A 20 mesh strainer on the supply side that is easily removed for cleaning, with a blow-off valve. The strainer shall have a pressure rating of up to 400 psig (2,758 kPa).
8. Isolating ball valve on the supply side.
9. Balancing flow valve (auto-fixed or manual) with isolating ball valve on the return.
10. Control valves in the supply water pipe.
11. Two-Way/Two-Position Valves that are fully open or fully closed in response to a line voltage (115 or 265-277 VAC) or a 24 VAC signal from the Daikin Applied thermostat or controller. Some means of relieving pump head pressure should be accounted for when two-way valves are selected. Normally open or normally closed valves are available. Both are spring-return.
12. Three-Way, Two-Position Valves that either allow full water flow through the coil or divert the flow through a bypass line. The valves respond to a line voltage (115 or 265-277 VAC) or to a 24 VAC signal from the Daikin Applied thermostat or controller. All standard three-way valves come with a fixed-balance orifice in the bypass line to compensate for flow balancing in the bypass position, eliminating the need for an additional balancing valve. Normally open or normally closed valves are available.
13. Two-Way Modulating Valves that modulate the water flow through the coil in response to a signal from the Daikin Applied thermostat or controller. All standard Daikin Applied modulating valves are three-wire floating point equal percentage valves. The modulating valves are factory mounted in the supply water pipe upstream of the coil.
14. Three-Way Modulating Valves that modulate the water flow through the coil in response to a signal from the Daikin Applied thermostat or controller. Three-way valves allow water that is directed through the coil to mix with water that is directed through the bypass line. This mixture exits through the leaving water pipe. All modulating valves are three-wire, floating-point equal percentage valves.

2.09 FILTERS

A. Filters shall be 1” (25 mm) throwaway. They shall be concealed from sight and easily removable.

2.010 MICROTECH CONTROLS

A. The unit control board shall be the main component of the system and shall contain the required inputs/outputs to operate a fan coil unit.

B. Unit controller inputs/outputs: The MicroTech controller will be microprocessor-based and have capabilities, performance, and memory sufficient to execute the various functions detailed in this specification. This document will not specify a type, a manufacturer, or a family of microcontrollers to be considered for use. However, at a minimum, the following features are deemed essential:

1. Analog Inputs: Room or Return Temperature & Timed Override Switch, Condensate Overflow, Set point Adjust, Fan Speed Switch, Heat/Cool/Auto Switch, Entering Water Temperature, Discharge Air Temperature.
2. Condensate Overflow. The presence of excessive condensate in the condensate drain pan is detected by a condensate sensor, which consists of a metal terminal ring mounted just below the top of the condensate pan. The analog input dedicated to condensate sensing must be capable of detecting the conductivity of water between the ring terminal and chassis ground. The conductivity trip point is 2.5 micro-ohms.
3. Set point Adjust. The Set point Adjust range will be interpreted by the base controller as an offset to the current temperature setpoint -5 to +5 degrees F or a range of 55 to 95 degrees F (software jumper selectable and scaled accordingly in software).
4. Heat/Cool/Auto - The Room Sensor shall incorporate a voltage signal that present different values to a single analog input which correspond to the unit operating mode functions detailed below. The room sensor is designed with specific voltage values to coincide with the software in unit control module.

0.0v = Cool, 1.0v = Auto, 2.5v = Heat, 5.0v = Switch not present.

5. Fan Speed Switch - The Room Sensor shall incorporate a voltage signal that present different voltage values to a single analog input which correspond to the fan speed mode functions detailed below. The room sensor is designed with specific voltage values to coincide with the software in unit control module.

0.0v = Auto, 1.0v = High, 2.0v = Medium, 3.0v = Low, 4.0v = OFF, 5.0v = Switch is not present.

6. Temperature Input. Sensing element in the MicroTech room temperature sensor is equivalent to NTC Thermistor – 10K ohms @ 25°C, 0.2°C interchangeability. Advanced Thermal Products – Curve Z. **NOTE:** The Timed (Tenant) Override switch will short out the Room sensor thermistor. Sensing range shall be 0 to 158°F with a resolution of 1°F and an accuracy of +/- 1.5°F Maximum Total Error.
7. Binary Inputs. 2 total (Freeze Fault Detection, Occupancy Sensor)

The Freeze Fault Detection switch shall be sourced with 24VAC or DC, +/-20%. The binary input detection circuit shall be desighned such that a minimum of 7mA current flows through the external contacts. Unoccupied Mode: this binary input will detect the presence of an earth-grounded signal, which is supplied by an external, remote set of contacts.

C. Binary Outputs: 9 total (Fan Low Speed, Fan Medium Speed, Fan High Speed, Valve Output #1, Valve Output #2, Valve Output #3, or Electric Heat Stage 1, Valve Output #4 or Electric Heat Stage 2, 2 Position Damper, Room Sensor Status LED).

1. Fan Speed Outputs -There are three fan speed outputs on baseboard. If all three outputs are de-energized, the fan motor is off. Only a single type (low, medium, high) of speed output shall be turned on when fan operation is required.

Low Speed: this binary output is used to operate the fan at low speed. If this output is energized, the fan operates at low speed.

Medium Speed: this binary output is used to operate the fan at medium speed. If this output is energized, the fan operates at medium speed.

High Speed: this binary output is used to operate the fan at high speed. If this output is energized, the fan operates at high speed.

2. Two-Position Damper Output: Binary output may be used to open a fresh air ventilation damper. If the output is de-energized, the damper is closed. If the output is energized, the damper is open.
3. Room Sensor Status Output: Binary output may be used to energize and de-energize an indicator located on the room sensor. See Room Sensor Status Output Annunciation Table.

D. Automatic Fan speed selection.

1. When the fan mode/speed switch is in the “Auto” position and capacity is required, the fan speed is determined automatically based on the amount of error from the respective heating or cooling on setpoint. If the room temperature error exceeds 4°F (2.22°C), the fan will be “forced on” in the highest available fan speed. Once the room temperature error falls below 3°F (1.67°C), the fan will no longer be “forced on” in the highest available fan speed. If the “Highest Speed Force On” is not active the fan will start at low speed, and fan speed changes are determined by whether the room temperature is above or below the effective controlling on setpoint.

E. Valve and Electric Heat Control

1. The controller will be factory configurable for the following valve and electric heat control configurations.

Pipe Cooling Only Valve	2-Pipe Hydronic Cooling with 2-Position Valve
	2-Pipe Hydronic Cooling with Modulating Valve
	2-Pipe Hydronic Cooling with 2-Position Valve with Electric Heat
2-Pipe Heating Only Valve	2-Pipe Hydronic Heating with 2-Position Valve
	2-Pipe Hydronic Heating with Modulating Valve
	2-Pipe Hydronic Heating with 2-Position Valve with Electric Heat
	2-Pipe Hydronic Heating with Modulating Valve with Electric Heat
2-Pipe Changeover Valve	2-Pipe Hydronic Heating or Cooling Changeover with 2-Position Valve
	2-Pipe Hydronic Heating or Cooling Changeover with Modulating Valve
	2-Pipe Hydronic Heating or Cooling Changeover with 2-Position Valve with Electric Heat
	2-Pipe Hydronic Heating or Cooling Changeover with Modulating Valve with Electric Heat
4-Pipe, 2-Valves	4-Pipe Hydronic Heating and Cooling with 2-Position Valve
	4-Pipe Hydronic Heating and Cooling with Modulating Valve
Electric Heat Only	Electric Heat Only

F. Software Jumpers

1. Software Jumpers will be designed into the MicroTech Fan Coil controller and used to modify controller configuration to match equipment configuration. The values of the jumper's (zero or one) shall set valve operation, fan operation, etc. Software Jumper definitions are below.

Function	Bit/Binary Setting	Model/Feature
Service Test Mode	Byte 1:b0	0 = Normal Operation 1 = Service Test Mode
Continuous/Cycling Fan	Byte 1: b1	0 = Continuous Fan 1 = Cycling Fan
Setpoint Adjust – Temperature Range	Byte 1: b2	0 = Short Range (-5 – +5°F) 1 = Long Range (55 to 95°F)
IO Expansion Board Selection	Byte1: b3	0 = No IO Expansion Board Present 1 = Enable IO Expansion Board
Economizer Selection	Byte 1: b4	0 = No Economizer Present 1 = Enable Economizer Use
N.O./N.C. 2-Position Heating Valve	Byte 1: b5	0 = Normally Open Heating Valve 1 = Normally Closed Heating Valve
N.O./N.C. 2-Position Cooling Valve	Byte 1: b6	0 = Normally Open Cooling Valve 1 = Normally Closed Cooling Valve
2-Position/Modulating Valves	Byte 1: b7	0 = 2-position Hydronic Valves 1 = Modulating Hydronic Valves
Heating Selection	Byte 2: b1=0,b0=0 Byte 2: b1=0,b0=1 Byte 2: b1=1,b0=0	00 = No Electric Heating 01 = 1-Stage Electric Heat 10 = 2-Stage Electric Heat (Future) 11 = Not Valid
Hydronic Valves Selection	Byte 2: b4=0,b3=0,b2=0 Byte 2: b4=0,b3=0,b2=1 Byte 2: b4=0,b3=1,b2=0 Byte 2: b4=0,b3=1,b2=1 Byte 2: b4=1,b3=0,b2=0	000 = No Hydronic Valves 001 = 2-Pipe Heating Only 010 = 2-Pipe Cooling Only 011 = 2-Pipe Heat & Cool Changeover 100 = 4-Pipe Hydronic Heat & Cool
Fan Speed Selection	Byte 2: b6=0,b5=0 Byte 2: b6=0,b5=1 Byte 2: b6=1,b5=0	00 = 1-Speed (Uses: High) 01 = 2-Speed (Uses: Low, High) 10 = 3-Speed (Uses: Low, Medium, High)
Freeze Fault Detect Binary Input Selection	Byte 2: b7	0 = Disable Binary Input 1 = Enable Binary Input
Emergency Shutdown Binary Input Selection	Byte 3: b0	0 = Disable Binary Input 1 = Enable Binary Input
Dirty Air Filter Binary Input Selection	Byte 3: b1	0 = Disable Binary Input 1 = Enable Binary Input

G. Intelligent Reset: (Condensate Overflow Alarm). The "Fault Retry" feature helps to minimize nuisance trips of automatic lockouts caused by low-pressure or low temperature faults. This feature automatically clears these faults the first two times they occur within a 24-hour period and triggers an automatic lockout on the 3rd fault. The retry count is reset to zero every 24 hours. The fault retry feature does not apply to a high pressure fault – which causes an immediate lockout and requires a manual reset, or condensate overflow or brownout faults – which are self-clearing.

H. MicroTech Unit Controller Status LED: Remote LED boards will provide visual feedback.

1. Room Sensor Status LED: A 5VDC signal and shall operate as follows:

Condition	LED ON Time (sec)	LED OFF Time (sec)
Alarm Active: specific alarm determines number of flashes	0.3	0.3 (1.3 between cycles)
Calibration or Network Wink Activity	3.0	3.0
Service Test Mode	0.0	Continually
Unoccupied Mode	0.5	5.5
Standby Mode	5.5	0.5
Occupied, Bypass Mode	Continually	0.0

I. Warranty - The contractor shall provide one full year warranty for furnishing parts on site which becomes defective in normal operation, from the date of start-up by the manufacturer's representative, or first beneficial use of the unit.

1. Manufacturer's warranty time periods may or may not coincide with the contractor's time period of obligation, but where the manufacturer's warranty contains an expiration date based upon the equipment shipping date, the contractor shall not be relieved of responsibility for covering the full time periods listed above.
2. The contractor shall be responsible for all shipping expenses not included by the manufacturer, both to procure the replacement part, and to return any defective parts to the manufacturer, as they may require.
3. The contractor's replacement warranty obligation after the first year shall be limited to furnishing of replacement parts only, and shall not include repair labor costs or materials such as refrigerant, oils, dehydration, refrigerant- moisture dryers, air filters, or drive belts.
4. The owner shall be responsible for providing replacement filters beyond the spares provided in the original contract, and for filter installation labor.

PART 3: EXECUTION

3.01 INSTALLATION

A. The Thinline Fan Coil unit shall be installed per manufacturer's Installation & Maintenance Bulletin.

1. Selected field mounted kits shall be specified on the unit schedule and installed per manufacturer's instruction.

UH-1,2,3

UH-1,2,3

Daikin Applied Training and Development

Now that you have made an investment in modern, efficient Daikin equipment, its care should be a high priority. For training information on all Daikin HVAC products, please visit us at www.DaikinApplied.com and click on Training, or call 540-248-9646 and ask for the Training Department.

Warranty

All Daikin equipment is sold pursuant to its standard terms and conditions of sale, including Limited Product Warranty. Consult your local Daikin Applied Representative for warranty details. To find your local Daikin Applied Representative, go to www.DaikinApplied.com.

Aftermarket Services

To find your local parts office, visit www.DaikinApplied.com or call 800-37PARTS (800-377-2787). To find your local service office, visit www.DaikinApplied.com or call 800-432-1342.

This document contains the most current product information as of this printing. For the most up-to-date product information, please go to www.DaikinApplied.com.

Products manufactured in an ISO Certified Facility.

©2019 Daikin Applied | (800) 432–1342 | www.DaikinApplied.com

APPENDIX 5:

PLUMBING
CALCULATIONS AND DATA SHEETS

D3286024 100% FAA Warrenton Plumbing Calcs

PLUMBING FIXTURE CALCULATIONS

Warrenton Command Center (WCC) Facility
Project #: D3286024
Date: December 28, 2021
Rev: 0
By: TannerB

Building	Warrenton Command Center Facility
Description	Renovated office building
Scope	Provide plumbing systems for renovation construction
Design WMO#	

Design Case Information:

Note: DFU info. based on IPC Table 709.1. Building drain size based on IPC Table 710.1(1). For branch drain size, see IPC Table 710.1(2). SFU, GPM, and LPS info. based on IPC Table E103.3(2) and E103.3(3).

Building Water System Information	
Flush Valve System	1
Flush Tank System	0
Hazen-Williams Friction Factor	130

Fixture Type	QTY.	Waste		Cold Water		Hot Water		Cold & Hot Water Comb.	
		Fixt. Units	Type Total	Fixt. Units	Type Total	Fixt. Units	Type Total	Fixt. Units	Type Total
Bathroom Group (private - tank)		5.00	0.00	2.70	0.00	1.50	0.00	3.60	0.00
Bathroom Group (private - valve)		6.00	0.00	6.00	0.00	3.00	0.00	8.00	0.00
Bathtub (private)		2.00	0.00	1.00	0.00	1.00	0.00	1.40	0.00
Bathtub (public)		2.00	0.00	3.00	0.00	3.00	0.00	4.00	0.00
Bidet (private)		1.00	0.00	1.50	0.00	1.50	0.00	2.00	0.00
Combination Fixture (private)		2.00	0.00	2.25	0.00	2.25	0.00	3.00	0.00
Dishwasher (private - automatic)		2.00	0.00	0.00	0.00	1.40	0.00	1.40	0.00
Drinking Fountain / Cooler	4	0.50	2.00	0.25	1.00	0.00	0.00	0.25	1.00
Kitchen/Break Sink (private)	1	2.00	2.00	1.00	1.00	1.00	1.00	1.40	1.40
Kitchen Sink (commercial)		2.00	0.00	3.00	0.00	3.00	0.00	4.00	0.00
Laundry Trays (1 to 3)		2.00	0.00	1.00	0.00	1.00	0.00	1.40	0.00
Lavatory (private)		1.00	0.00	0.50	0.00	0.50	0.00	0.70	0.00
Lavatory (public)	12	1.00	12.00	1.50	18.00	1.50	18.00	2.00	24.00
Service Sink / Mop Basin (offices)	1	2.00	2.00	2.25	2.25	2.25	2.25	3.00	3.00
Shower Head (private)		2.00	0.00	1.00	0.00	1.00	0.00	1.40	0.00
Shower Head (public)		2.00	0.00	3.00	0.00	3.00	0.00	4.00	0.00
Urinal (1" flush valve)		4.00	0.00	10.00	0.00	0.00	0.00	10.00	0.00
Urinal (3/4" flush valve)	4	2.00	8.00	5.00	20.00	0.00	0.00	5.00	20.00
Urinal (flush tank)		2.00	0.00	3.00	0.00	0.00	0.00	3.00	0.00
Urinal (waterless)		0.50	0.00	0.00	0.00	0.00	0.00	0.00	0.00
Washing Machine (8 lb - private)		2.00	0.00	1.00	0.00	1.00	0.00	1.40	0.00
Washing Machine (8 lb - public)		2.00	0.00	2.25	0.00	2.25	0.00	3.00	0.00
Washing Machine (15 lb - public)		3.00	0.00	3.00	0.00	3.00	0.00	4.00	0.00
Water Closet (public - valve)	16	4.00	64.00	10.00	160.00	0.00	0.00	10.00	160.00
Water Closet (private - valve)		3.00	0.00	6.00	0.00	0.00	0.00	6.00	0.00
Water Closet (public - tank)		4.00	0.00	5.00	0.00	0.00	0.00	5.00	0.00
Water Closet (private - tank)		4.00	0.00	2.20	0.00	0.00	0.00	2.20	0.00
Water Closet (flushometer tank)		4.00	0.00	2.00	0.00	0.00	0.00	2.00	0.00
Floor Drain	9	2.00	18.00	0.00	0.00	0.00	0.00	0.00	0.00
Mother's Room Sink	1	2.00	2.00	1.00	1.00	1.00	1.00	1.40	1.40
User Defined			0.00		0.00		0.00		0.00
User Defined			0.00		0.00		0.00		0.00
User Defined			0.00		0.00		0.00		0.00
User Defined			0.00		0.00		0.00		0.00
Sub-Total	**48.00**	**Waste**	**110.00**	**Cold**	**203.25**	**Hot**	**22.25**	**Combined**	**210.80**

PLUMBING FIXTURE CALCULATIONS

Sub-Total Continued	Waste		Cold		Hot		Combined	
Fixture Units	110.00	DFU's	204.00	SFU's	23.00	SFU's	211.00	SFU's
Equivalent Flow			90.88	GPM	20.74	GPM	92.42	GPM

WASTE DATA			
Fixture Units		110.00	DFU's
Pipe Size		**4.00**	**Inches**

COLD WATER DATA			
Cold Water Fixture Flow		91.00	GPM
Pipe Size		**2.5**	**Inches**
Velocity		**6.12**	**FPS**
Friction Loss Per 100FT		**2.90**	**PSI**

HOT WATER DATA			
Hot Water Fixture Flow		21.00	GPM
Pipe Size		**1.5**	**Inches**
Velocity		**3.79**	**FPS**
Friction Loss Per 100FT		**2.12**	**PSI**

COMBINED DATA			
Combined Fixture Flow		93.00	GPM
Hose Bibbs (with Diversity)	10.00	16.50	GPM
Equipment Make-Up*		0.00	GPM
Cooling Tower (Tonage)		0.00	GPM
Miscellaneous Flow		0.00	GPM
Total Flow		**110.00**	**GPM**
Pipe Size		**3**	**Inches**
Velocity		**5.18**	**FPS**
Friction Loss Per 100FT		**1.73**	**PSI**

DOMESTIC HOT WATER HEATER CALCULATIONS

Warrenton Command Center (WCC) Facility
Project #: D3286024
Date: December 28, 2021
Rev: 0
By: TannerB

Building	Warrenton Command Center Facility
Description	Renovated office building
Scope	Provide plumbing systems for renovation construction
Design WMO#	

Design Case Information:

Note: Flow and usage information based on data outlined in the ASPE data books, IPC, and ASHRAE Applications "Service Water Heating".

Hot Water Demand per Fixture for Various Types of Buildings in Gallons of Water per Hour per Fixture											
	○	○	○	○	○	○	◉	○	○	○	○
Fixtures	**Apartment**	**Club**	**Gymnasium**	**Hospital**	**Hotel**	**Industrial Plant**	**Office Building**	**Private Residence**	**School**	**YMCA**	**Custom**
Lavatory (Private)	2	2	2	2	2	2	2	2	2	2	
Lavatory (Public)	4	6	8	6	8	12	6		15	8	
Bathtubs	20	20	30	20	20		20		30		
Dishwashers[1]	15	50-150		50-150	50-200	20-100		15	20-100	20-100	
Foot Basins	3	3	12	3	3	12		3	3	12	
Kitchen Sink	10	20		20	30	20	20	10	20	20	
Laundry, Stationary Tubs	20	28		28	28		20		28		
Pantry Sink	5	10		10	10		10	5	10	10	
Showers	30	150	225	75	75	225	30	30	225	225	
Service Sink	20	20		20	30	20	20	15	20	20	
Hydrotherapeutic Showers				400							
Hubbard Baths				600							
Leg Baths				100							
Arm Baths				35							
Sitz Baths				30							
Continuous-Flow Baths				165							
Circular Wash Sinks				20	20	30	20		30		
Semi-Circular Wash Sinks				10	10	15	10		15		
Demand Factor	**0.30**	**0.30**	**0.40**	**0.25**	**0.25**	**0.40**	**0.30**	**0.30**	**0.40**	**0.40**	
Storage Capacity Factor[2]	**1.25**	**0.90**	**1.00**	**0.60**	**0.80**	**1.00**	**2.00**	**0.70**	**1.00**	**1.00**	

1. Dishwasher requirements should be taken from this table or from manufacturers' data for the model to be used, if this is known.

2. Ratio of storage tank capacity to probable demand per hour. Storage capacity may be reduced where an unlimited supply of steam is available from a central street steam system or large boiler plant.

DOMESTIC HOT WATER HEATER CALCULATIONS

Fixtures	Quantity	GPH	Total GPH
Lavatory (Private)		2	0
Lavatory (Public)	12	6	72
Bathtubs		20	0
Dishwashers		0	0
Foot Basins		0	0
Kitchen Sink	2	20	40
Laundry		40	0
Pantry Sink		10	0
Showers		30	0
Service Sink	1	20	20
Hydrotherapeutic Showers		0	0
Hubbard Baths		0	0
Leg Baths		0	0
Arm Baths		0	0
Sitz Baths		0	0
Continuous-Flow Baths		0	0
Circular Wash Sinks		20	0
Semi-Circular Wash Sinks		10	0
User Defined			0
User Defined			0
User Defined			0
User Defined			0
User Defined			0
User Defined			0

Total GPH			**132**	**GPH**
Demand Factor*	0.30		**39.60**	**GPH**
Storage Capacity Factor	2.00		**79.20**	**Gallons**

*Demand factor is based on building occupancy type

PLUMBING DOMESTIC HOT WATER RECIRCULATION CALCULATIONS

Warrenton Command Center (WCC) Facility
Project #: D3286024
Date: December 28, 2021
Rev: 0
By: TannerB

Building	Warrenton Command Center Facility
Description	Renovated office building
Scope	Provide plumbing systems for renovation construction
Design WMO#	

DESIGN CASE INFORMATION:

Temperature Information		
System Temperature	110	°F
Indoor Ambient Air Temperature	70	°F
Temperature Differential	40	°F
Desired System ΔT	5	°F

Nominal Pipe Sizes					
NPS (In)	DN (mm)	NPS (In)	DN (mm)	NPS (In)	DN (mm)
1/2"	15	1-1/4"	32	2-1/2"	65
3/4"	20	1-1/2"	40	3"	80
1"	25	2"	50	4"	100

Flow Information		
Total Flow All System Calibrated Balancing Valves	1.00	gpm

Pipe Fitting Safety Factor		
Pipe Fitting Safety Factor	25.00	%

Insulation Thickness Values (inches)					
1/2" or 15mm	1.00	1-1/4" or 32mm	1.50	2-1/2" or 65mm	2.00
3/4" or 20mm	1.00	1-1/2" or 40mm	1.50	3" or 80mm	2.00
1" or 25mm	1.00	2" or 50mm	2.00	4" or 100mm	2.00

Heat Loss Values W/ft (BTU/ft)								
1/2" or 15mm	1.28	W/ft	1-1/4" or 32mm	1.53	W/ft	2-1/2" or 65mm	1.83	W/ft
	4.37	BTU/ft		5.23	BTU/ft		6.25	BTU/ft
3/4" or 20mm	1.53	W/ft	1-1/2" or 40mm	1.75	W/ft	3" or 80mm	2.08	W/ft
	5.23	BTU/ft		5.98	BTU/ft		7.10	BTU/ft
1" or 25mm	1.75	W/ft	2" or 50mm	1.60	W/ft	4" or 100mm	2.48	W/ft
	5.98	BTU/ft		5.47	BTU/ft		8.47	BTU/ft

Note: Glass fiber heat loss information based on 2003 ASPE Data Book "Plumbing Components and Equipment", Table 5-2.

PLUMBING DOMESTIC HOT WATER RECIRCULATION CALCULATIONS

PRESSURE INFORMATION:

(CBV-1) Furthest HWR System Loop (CBV-1)

3/4" or 20mm HWR Piping Segments							
Segment I.D.	Pipe Size	Pipe I.D.	Linear Feet	Lin/ft + Safety %	Flow Thru Segment (gpm)	PSI Loss per 100ft	Total Segment Loss (PSI)
A-B	3/4" or 20mm	0.75	100.00	100.00	0.50	0.056	0.056
	3/4" or 20mm			0.00			
	3/4" or 20mm			0.00			
	3/4" or 20mm			0.00			
	3/4" or 20mm			0.00			
	3/4" or 20mm			0.00			
	3/4" or 20mm			0.00			
	3/4" or 20mm			0.00			
	3/4" or 20mm			0.00			
	3/4" or 20mm			0.00			
Calculated Pressure Loss Sub-Total (PSI)						**0.06**	**PSI**

PRESSURE INFORMATION: (***Continued***)

(CBV-1) Furthest HWR System Loop (CBV-1)

Pressure Loss Totals		
Calculated Pipe Pressure Loss	**0.06**	**PSI**
	0.14	**ft. of Head**
Thermostatic Mixing Valve Loss	**5.00**	**ft. of Head**
Calibrated Balancing Valve Loss	**5.00**	**ft. of Head**
User Defined	**0.00**	**ft. of Head**
User Defined	**0.00**	**ft. of Head**
User Defined	**0.00**	**ft. of Head**
User Defined	**0.00**	**ft. of Head**
User Defined	**0.00**	**ft. of Head**
Total Calculated Pressure Loss	**10.14**	**ft. of Head**
	4.39	**PSI**

PLUMBING DOMESTIC HOT WATER RECIRCULATION CALCULATIONS

FLOW RATE INFORMATION:

Calibrated Balancing Valve I.D.			**CBV-1**	*Second floor recirculation branch (Furthest CBV)*					
HW and HWR Looped Return From Water Heater									
Domestic Hot Water Supply Piping					**Domestic Hot Water Return Piping**				
Pipe Size	Lin/ft	BTU/loss/ft	Total Loss	System ΔT	Pipe Size	Lin/ft	BTU/loss/ft	Total Loss	System ΔT
1/2" or 15mm		4.37	0.00	0.00	1/2" or 15mm		4.37	0.00	0.00
3/4" or 20mm	15.00	5.23	78.45	0.03	3/4" or 20mm	90.00	5.23	470.70	0.19
1" or 25mm	30.00	5.98	179.40	0.07	1" or 25mm		5.98	0.00	0.00
1-1/4" or 32mm		5.23	0.00	0.00	1-1/4" or 32mm		5.23	0.00	0.00
1-1/2" or 40mm	50.00	5.98	299.00	0.12	1-1/2" or 40mm		5.98	0.00	0.00
2" or 50mm		5.47	0.00	0.00	2" or 50mm		5.47	0.00	0.00
2-1/2" or 65mm		6.25	0.00	0.00	2-1/2" or 65mm		6.25	0.00	0.00
3" or 80mm		7.10	0.00	0.00	3" or 80mm		7.10	0.00	0.00
4" or 100mm		8.47	0.00	0.00	4" or 100mm		8.47	0.00	0.00
Minimum Calculated Hot Water Supply Flow Rate Subtotal				0.22	Minimum Calculated Hot Water Return Flow Rate Subtotal				0.19
Total Minimum Calculated Flow Rate			**0.42**	**gpm**	**Design CBV Flow Rate Provided**			**0.50**	**gpm**

(BTUH = gpm x ΔT°F x 8.33lbs x 60mins)

PLUMBING DOMESTIC HOT WATER RECIRCULATION CALCULATIONS

FLOW RATE INFORMATION:

Calibrated Balancing Valve I.D.			**CBV-2**		*First floor recirculation branch*				
HW and HWR Looped Return From Water Heater									
Domestic Hot Water Supply Piping					**Domestic Hot Water Return Piping**				
Pipe Size	Lin/ft	BTU/loss/ft	Total Loss	System ΔT	Pipe Size	Lin/ft	BTU/loss/ft	Total Loss	System ΔT
1/2" or 15mm		4.37	0.00	0.00	1/2" or 15mm		4.37	0.00	0.00
3/4" or 20mm	10.00	5.23	52.30	0.02	3/4" or 20mm	50.00	5.23	261.50	0.10
1" or 25mm		5.98	0.00	0.00	1" or 25mm		5.98	0.00	0.00
1-1/4" or 32mm		5.23	0.00	0.00	1-1/4" or 32mm		5.23	0.00	0.00
1-1/2" or 40mm	50.00	5.98	299.00	0.12	1-1/2" or 40mm		5.98	0.00	0.00
2" or 50mm		5.47	0.00	0.00	2" or 50mm		5.47	0.00	0.00
2-1/2" or 65mm		6.25	0.00	0.00	2-1/2" or 65mm		6.25	0.00	0.00
3" or 80mm		7.10	0.00	0.00	3" or 80mm		7.10	0.00	0.00
4" or 100mm		8.47	0.00	0.00	4" or 100mm		8.47	0.00	0.00
Minimum Calculated Hot Water Supply Flow Rate Subtotal				0.14	Minimum Calculated Hot Water Return Flow Rate Subtotal				0.10
Total Minimum Calculated Flow Rate			**0.25**	**gpm**	**Design CBV Flow Rate Provided**			**0.50**	**gpm**

(BTUH = gpm x ΔT°F x 8.33lbs x 60mins)

DOMESTIC WATER PRESSURE CALCULATIONS

Warrenton Command Center (WCC) Facility
Project #: D3286024
Date: December 28, 2021
Rev: 0
By: TannerB

Building	Warrenton Command Center Facility
Description	Renovated office building
Scope	Provide plumbing systems for new construction
Design WMO#	

Design Case Pressure Information:

Note: Pressure information is converted directly from the PSI value. Building pipe pressure loss based on pipe size indicated on Building Flow Information, actual site pipe sizing tends to be larger and will therefore tend to have less pressure drop.

BUILDING DISTANCE AND ELEVATION INFORMATION				
Incoming Water Pressure	138.60	Ft. H^2O	41.58	M. H^2O
Building Height of Most Remote Fixture	20.00	Feet	6.00	Meters
Piping Distance from Mechanical Room to Most Remote Fixture	200.00	Feet	60.00	Meters

BUILDING PRESSURE INFORMATION						
Available Incoming Pressure	**60.00**	PSI	138.60	Ft. H^2O	413.69	kPa
Building Water Meter Loss	6.00	PSI	13.86	Ft. H^2O	41.37	kPa
Building Water Backflow Preventer Loss	9.00	PSI	20.79	Ft. H^2O	62.05	kPa
Total Pipe Friction Loss	3.46	PSI	8.00	Ft. H^2O	23.87	kPa
Building Height Loss	8.66	PSI	20.00	Ft. H^2O	59.69	kPa
Total Pressure Drop	27.12	PSI	62.65	Ft. H^2O	186.99	kPa
Minimum Pressure At Furthest Demand Fixture	25.00	PSI	57.75	Ft. H^2O	172.37	kPa
Required Total System Pressure	**52.12**	PSI	120.40	Ft. H^2O	359.36	kPa
Net Water Pressure	**7.88**	PSI	18.20	Ft. H^2O	54.33	kPa
Pump Operation Pressure Differential	-	PSI	-	Ft. H^2O	-	kPa
Total Boost Required	**0.00**	PSI	0.00	Ft. H^2O	0.00	kPa
Outlet Domestic Booster Pump Set Point	**-**	PSI	-	Ft. H^2O	-	kPa

PLUMBING NATURAL GAS CALCULATIONS

Warrenton Command Center (WCC) Facility
Project #: D3286024
Date: August 18, 2021
Rev: 0
By: TannerB

Building	Warrenton Command Center Facility
Description	New office building
Scope	Provide natural gas system for renovation work

Design Case Information:

Code:	IFGC 2018, Table 402.4(5)
Gas Type:	NATURAL GAS
Inlet Pressure:	2 PSIG
Pressure Drop:	1 PSIG
Specific Gravity:	0.6
Maximum Developed Length:	350 FEET*

*Length includes a 50% allowance for fittings

EQUIPMENT TAG	NATURAL GAS INPUT (CFH)	GAS PRESSURE MINIMUM (IN WC)	GAS PRESSURE MAXIMUM (IN WC)	CONNECTION SIZE (IN.)	NOTES
RTU-1	270	6.0	10.5	1.5"	Rooftop Unit
RTU-2	270	6.0	10.5	1.5"	Rooftop Unit
RTU-3	270	6.0	10.5	1.5"	Rooftop Unit
RTU-4	270	6.0	10.5	1.5"	Rooftop Unit
G-1	4,131	7.0	11.0	3.0"	Emergency Backup Generator
TOTAL	5,211				

SIZING FOR PIPING
DOWNSTREAM OF GAS METER

TABLE 402.4(5) SCHEDULE 40 METALLIC PIPE

Gas	Natural
Inlet Pressure	2.0 psi
Pressure Drop	1.0 psi
Specific Gravity	0.60

PIPE SIZE (inch)									
Nominal	1/2	3/4	1	1 1/4	1 1/2	2	2 1/2	3	4
Actual ID	0.622	0.824	1.049	1.380	1.610	2.067	2.469	3.068	4.026
Length (ft)	Capacity in Cubic Feet of Gas Per Hour								
10	1,510	3,040	5,560	11,400	17,100	32,900	52,500	92,800	189,000
20	1,070	2,150	3,930	8,070	12,100	23,300	37,100	65,600	134,000
30	869	1,760	3,210	6,590	9,880	19,000	30,300	53,600	109,000
40	753	1,520	2,780	5,710	8,550	16,500	26,300	46,400	94,700
50	673	1,360	2,490	5,110	7,650	14,700	23,500	41,500	84,700
60	615	1,240	2,270	4,660	6,980	13,500	21,400	37,900	77,300
70	569	1,150	2,100	4,320	6,470	12,500	19,900	35,100	71,600
80	532	1,080	1,970	4,040	6,050	11,700	18,600	32,800	67,000
90	502	1,010	1,850	3,810	5,700	11,000	17,500	30,900	63,100
100	462	934	1,710	3,510	5,260	10,100	16,100	28,500	58,200
125	414	836	1,530	3,140	4,700	9,060	14,400	25,500	52,100
150	372	751	1,370	2,820	4,220	8,130	13,000	22,900	46,700
175	344	695	1,270	2,601	3,910	7,530	12,000	21,200	43,300
200	318	642	1,170	2,410	3,610	6,960	11,100	19,600	40,000
250	279	583	1,040	2,140	3,210	6,180	9,850	17,400	35,500
300	253	528	945	1,940	2,910	5,600	8,920	15,800	32,200
350	232	486	869	1,790	2,670	5,150	8,210	14,500	29,600
400	216	452	809	1,660	2,490	4,790	7,640	13,500	27,500
450	203	424	759	1,560	2,330	4,500	7,170	12,700	25,800
500	192	401	717	1,470	2,210	4,250	6,770	12,000	24,400
550	182	381	681	1,400	2,090	4,030	6,430	11,400	23,200
600	174	363	650	1,330	2,000	3,850	6,130	10,800	22,100
650	166	348	622	1,280	1,910	3,680	5,870	10,400	21,200
700	160	334	598	1,230	1,840	3,540	5,640	9,970	20,300
750	154	322	576	1,180	1,770	3,410	5,440	9,610	19,600
800	149	311	556	1,140	1,710	3,290	5,250	9,280	18,900
850	144	301	538	1,100	1,650	3,190	5,080	8,980	18,300
900	139	292	522	1,070	1,600	3,090	4,930	8,710	17,800
950	135	283	507	1,040	1,560	3,000	4,780	8,460	17,200
1,000	132	275	493	1,010	1,520	2,920	4,650	8,220	16,800
1,100	125	262	468	960	1,440	2,770	4,420	7,810	15,900
1,200	119	250	446	917	1,370	2,640	4,220	7,450	15,200
1,300	114	239	427	878	1,320	2,530	4,040	7,140	14,600
1,400	110	230	411	843	1,260	2,430	3,880	6,860	14,000
1,500	106	221	396	812	1,220	2,340	3,740	6,600	13,500
1,600	102	214	382	784	1,180	2,260	3,610	6,380	13,000
1,700	99	207	370	759	1,140	2,190	3,490	6,170	12,600
1,800	96	200	358	736	1,100	2,120	3,390	5,980	12,200
1,900	93	195	348	715	1,070	2,060	3,290	5,810	11,900
2,000	91	189	339	695	1,040	2,010	3,200	5,650	11,500

or SI: 1 inch = 25.4 mm, 1 foot = 304.8 mm, 1 pound per square inch = 6.895 kPa, 1-inch water column = 0.2488 kPa, 1 British thermal unit per hour = 0.2931 W, 1 cubic foot per hour = 0.0283 m^3/h, 1 degree = 0.01745 rad.

Note: All table entries have been rounded to three significant digits.

SIZING FOR PIPING BRANCH TO ROOF

TABLE 402.4(5) SCHEDULE 40 METALLIC PIPE

Gas	Natural
Inlet Pressure	2.0 psi
Pressure Drop	1.0 psi
Specific Gravity	0.60

2" EXISTING TO REMAIN IS SUFFICIENT

PIPE SIZE (inch)									
Nominal	1/2	3/4	1	1 1/4	1 1/2	2	2 1/2	3	4
Actual ID	0.622	0.824	1.049	1.380	1.610	2.067	2.469	3.068	4.026
Length (ft)	Capacity in Cubic Feet of Gas Per Hour								
10	1,510	3,040	5,560	11,400	17,100	32,900	52,500	92,800	189,000
20	1,070	2,150	3,930	8,070	12,100	23,300	37,100	65,600	134,000
30	869	1,760	3,210	6,590	9,880	19,000	30,300	53,600	109,000
40	753	1,520	2,780	5,710	8,550	16,500	26,300	46,400	94,700
50	673	1,360	2,490	5,110	7,650	14,700	23,500	41,500	84,700
60	615	1,240	2,270	4,660	6,980	13,500	21,400	37,900	77,300
70	569	1,150	2,100	4,320	6,470	12,500	19,900	35,100	71,600
80	532	1,080	1,970	4,040	6,050	11,700	18,600	32,800	67,000
90	502	1,010	1,850	3,810	5,700	11,000	17,500	30,900	63,100
100	462	934	1,710	3,510	5,260	10,100	16,100	28,500	58,200
125	414	836	1,530	3,140	4,700	9,060	14,400	25,500	52,100
150	372	751	1,370	2,820	4,220	8,130	13,000	22,900	46,700
175	344	695	1,270	2,601	3,910	7,530	12,000	21,200	43,300
200	318	642	1,170	2,410	3,610	6,960	11,100	19,600	40,000
250	279	583	1,040	2,140	3,210	6,180	9,850	17,400	35,500
300	253	528	945	1,940	2,910	5,600	8,920	15,800	32,200
350	232	486	869	1,790	2,670	5,150	8,210	14,500	29,600
400	216	452	809	1,660	2,490	4,790	7,640	13,500	27,500
450	203	424	759	1,560	2,330	4,500	7,170	12,700	25,800
500	192	401	717	1,470	2,210	4,250	6,770	12,000	24,400
550	182	381	681	1,400	2,090	4,030	6,430	11,400	23,200
600	174	363	650	1,330	2,000	3,850	6,130	10,800	22,100
650	166	348	622	1,280	1,910	3,680	5,870	10,400	21,200
700	160	334	598	1,230	1,840	3,540	5,640	9,970	20,300
750	154	322	576	1,180	1,770	3,410	5,440	9,610	19,600
800	149	311	556	1,140	1,710	3,290	5,250	9,280	18,900
850	144	301	538	1,100	1,650	3,190	5,080	8,980	18,300
900	139	292	522	1,070	1,600	3,090	4,930	8,710	17,800
950	135	283	507	1,040	1,560	3,000	4,780	8,460	17,200
1,000	132	275	493	1,010	1,520	2,920	4,650	8,220	16,800
1,100	125	262	468	960	1,440	2,770	4,420	7,810	15,900
1,200	119	250	446	917	1,370	2,640	4,220	7,450	15,200
1,300	114	239	427	878	1,320	2,530	4,040	7,140	14,600
1,400	110	230	411	843	1,260	2,430	3,880	6,860	14,000
1,500	106	221	396	812	1,220	2,340	3,740	6,600	13,500
1,600	102	214	382	784	1,180	2,260	3,610	6,380	13,000
1,700	99	207	370	759	1,140	2,190	3,490	6,170	12,600
1,800	96	200	358	736	1,100	2,120	3,390	5,980	12,200
1,900	93	195	348	715	1,070	2,060	3,290	5,810	11,900
2,000	91	189	339	695	1,040	2,010	3,200	5,650	11,500

or SI: 1 inch = 25.4 mm, 1 foot = 304.8 mm, 1 pound per square inch = 6.895 kPa, 1-inch water column = 0.2488 kPa, 1 British thermal unit per hour = 0.2931 W, 1 cubic foot per hour = 0.0283 m^3/h, 1 degree = 0.01745 rad.

Note: All table entries have been rounded to three significant digits.

SIZING FOR PIPING BRANCHES TO PRESSURE REGULATORS SERVING RTU-1, 2, 3 & 4

TABLE 402.4(5) SCHEDULE 40 METALLIC PIPE

Gas	Natural
Inlet Pressure	2.0 psi
Pressure Drop	1.0 psi
Specific Gravity	0.60

PIPE SIZE (inch)									
Nominal	1/2	3/4	1	1 1/4	1 1/2	2	2 1/2	3	4
Actual ID	0.622	0.824	1.049	1.380	1.610	2.067	2.469	3.068	4.026
Length (ft)	Capacity in Cubic Feet of Gas Per Hour								
10	1,510	3,040	5,560	11,400	17,100	32,900	52,500	92,800	189,000
20	1,070	2,150	3,930	8,070	12,100	23,300	37,100	65,600	134,000
30	869	1,760	3,210	6,590	9,880	19,000	30,300	53,600	109,000
40	753	1,520	2,780	5,710	8,550	16,500	26,300	46,400	94,700
50	673	1,360	2,490	5,110	7,650	14,700	23,500	41,500	84,700
60	615	1,240	2,270	4,660	6,980	13,500	21,400	37,900	77,300
70	569	1,150	2,100	4,320	6,470	12,500	19,900	35,100	71,600
80	532	1,080	1,970	4,040	6,050	11,700	18,600	32,800	67,000
90	502	1,010	1,850	3,810	5,700	11,000	17,500	30,900	63,100
100	462	934	1,710	3,510	5,260	10,100	16,100	28,500	58,200
125	414	836	1,530	3,140	4,700	9,060	14,400	25,500	52,100
150	372	751	1,370	2,820	4,220	8,130	13,000	22,900	46,700
175	344	695	1,270	2,601	3,910	7,530	12,000	21,200	43,300
200	318	642	1,170	2,410	3,610	6,960	11,100	19,600	40,000
250	279	583	1,040	2,140	3,210	6,180	9,850	17,400	35,500
300	253	528	945	1,940	2,910	5,600	8,920	15,800	32,200
350	232	486	869	1,790	2,670	5,150	8,210	14,500	29,600
400	216	452	809	1,660	2,490	4,790	7,640	13,500	27,500
450	203	424	759	1,560	2,330	4,500	7,170	12,700	25,800
500	192	401	717	1,470	2,210	4,250	6,770	12,000	24,400
550	182	381	681	1,400	2,090	4,030	6,430	11,400	23,200
600	174	363	650	1,330	2,000	3,850	6,130	10,800	22,100
650	166	348	622	1,280	1,910	3,680	5,870	10,400	21,200
700	160	334	598	1,230	1,840	3,540	5,640	9,970	20,300
750	154	322	576	1,180	1,770	3,410	5,440	9,610	19,600
800	149	311	556	1,140	1,710	3,290	5,250	9,280	18,900
850	144	301	538	1,100	1,650	3,190	5,080	8,980	18,300
900	139	292	522	1,070	1,600	3,090	4,930	8,710	17,800
950	135	283	507	1,040	1,560	3,000	4,780	8,460	17,200
1,000	132	275	493	1,010	1,520	2,920	4,650	8,220	16,800
1,100	125	262	468	960	1,440	2,770	4,420	7,810	15,900
1,200	119	250	446	917	1,370	2,640	4,220	7,450	15,200
1,300	114	239	427	878	1,320	2,530	4,040	7,140	14,600
1,400	110	230	411	843	1,260	2,430	3,880	6,860	14,000
1,500	106	221	396	812	1,220	2,340	3,740	6,600	13,500
1,600	102	214	382	784	1,180	2,260	3,610	6,380	13,000
1,700	99	207	370	759	1,140	2,190	3,490	6,170	12,600
1,800	96	200	358	736	1,100	2,120	3,390	5,980	12,200
1,900	93	195	348	715	1,070	2,060	3,290	5,810	11,900
2,000	91	189	339	695	1,040	2,010	3,200	5,650	11,500

or SI: 1 inch = 25.4 mm, 1 foot = 304.8 mm, 1 pound per square inch = 6.895 kPa, 1-inch water column = 0.2488 kPa, 1 British thermal unit per hour = 0.2931 W, 1 cubic foot per hour = 0.0283 m^3/h, 1 degree = 0.01745 rad.

Note: All table entries have been rounded to three significant digits.

SIZING FOR PIPING BRANCH TO GENERATOR G-1

Gas	Natural
Inlet Pressure	2.0 psi
Pressure Drop	1.0 psi
Specific Gravity	0.60

TABLE 402.4(22)
POLYETHYLENE PLASTIC PIPE

	PIPE SIZE (inch)							
Nominal OD	1/2	3/4	1	1 1/4	1 1/2	2	3	4
Designation	SDR 9	SDR 11	SDR 11	SDR 10	SDR 11	SDR 11	SDR 11	SDR 11
Actual ID	0.660	0.860	1.077	1.328	1.554	1.943	2.864	3.682
Length (ft)	**Capacity in Cubic Feet of Gas per Hour**							
10	1,860	3,720	6,710	11,600	17,600	31,600	87,300	169,000
20	1,280	2,560	4,610	7,990	12,100	21,700	60,000	116,000
30	1,030	2,050	3,710	6,420	9,690	17,400	48,200	93,200
40	878	1,760	3,170	5,490	8,300	14,900	41,200	79,700
50	778	1,560	2,810	4,870	7,350	13,200	36,600	70,700
60	705	1,410	2,550	4,410	6,660	12,000	33,100	64,000
70	649	1,300	2,340	4,060	6,130	11,000	30,500	58,900
80	603	1,210	2,180	3,780	5,700	10,200	28,300	54,800
90	566	1,130	2,050	3,540	5,350	9,610	26,600	51,400
100	535	1,070	1,930	3,350	5,050	9,080	25,100	48,600
125	474	949	1,710	2,970	4,480	8,050	22,300	43,000
150	429	860	1,550	2,690	4,060	7,290	20,200	39,000
175	395	791	1,430	2,470	3,730	6,710	18,600	35,900
200	368	736	1,330	2,300	3,470	6,240	17,300	33,400
250	326	652	1,180	2,040	3,080	5,530	15,300	29,600
300	295	591	1,070	1,850	2,790	5,010	13,900	26,800
350	272	544	981	1,700	2,570	4,610	12,800	24,700
400	253	506	913	1,580	2,390	4,290	11,900	22,900
450	237	475	856	1,480	2,240	4,020	11,100	21,500
500	224	448	809	1,400	2,120	3,800	10,500	20,300
550	213	426	768	1,330	2,010	3,610	9,990	19,300
600	203	406	733	1,270	1,920	3,440	9,530	18,400
650	194	389	702	1,220	1,840	3,300	9,130	17,600
700	187	374	674	1,170	1,760	3,170	8,770	16,900
750	180	360	649	1,130	1,700	3,050	8,450	16,300
800	174	348	627	1,090	1,640	2,950	8,160	15,800
850	168	336	607	1,050	1,590	2,850	7,890	15,300
900	163	326	588	1,020	1,540	2,770	7,650	14,800
950	158	317	572	990	1,500	2,690	7,430	14,400
1,000	154	308	556	963	1,450	2,610	7,230	14,000
1,100	146	293	528	915	1,380	2,480	6,870	13,300
1,200	139	279	504	873	1,320	2,370	6,550	12,700
1,300	134	267	482	836	1,260	2,270	6,270	12,100
1,400	128	257	463	803	1,210	2,180	6,030	11,600
1,500	124	247	446	773	1,170	2,100	5,810	11,200
1,600	119	239	431	747	1,130	2,030	5,610	10,800
1,700	115	231	417	723	1,090	1,960	5,430	10,500
1,800	112	224	404	701	1,060	1,900	5,260	10,200
1,900	109	218	393	680	1,030	1,850	5,110	9,900
2,000	106	212	382	662	1,000	1,800	4,970	9,600

For SI: 1 inch = 25.4 mm, 1 foot = 304.8 mm, 1 pound per square inch = 6.895 kPa, 1-inch water column = 0.2488 kPa, 1 British thermal unit per hour = 0.2931 W, 1 cubic foot per hour = 0.0283 m^3/h, 1 degree = 0.01745 rad.

Note: All table entries have been rounded to three significant digits.

SIZING FOR PIPING DOWNSTREAM OF PRESSURE REGULATORS SERVING RTU-1 ,2 ,3 & 4

Gas	Natural
Inlet Pressure	Less than 2 psi
Pressure Drop	0.5 in. w.c.
Specific Gravity	0.60

TABLE 402.4(2)
SCHEDULE 40 METALLIC PIPE

	PIPE SIZE (inch)													
Nominal	1/2	3/4	1	1 1/4	1 1/2	2	2 1/2	3	4	5	6	8	10	12
Actual ID	0.622	0.824	1.049	1.380	1.610	2.067	2.469	3.068	4.026	5.047	6.065	7.981	10.020	11.938
Length (ft)	Capacity in Cubic Feet of Gas Per Hour													
10	172	360	678	1,390	2,090	4,020	6,400	11,300	23,100	41,800	67,600	139,000	252,000	399,000
20	118	247	466	957	1,430	2,760	4,400	7,780	15,900	28,700	46,500	95,500	173,000	275,000
30	95	199	374	768	1,150	2,220	3,530	6,250	12,700	23,000	37,300	76,700	139,000	220,000
40	81	170	320	657	985	1,900	3,020	5,350	10,900	19,700	31,900	65,600	119,000	189,000
50	72	151	284	583	873	1,680	2,680	4,740	9,660	17,500	28,300	58,200	106,000	167,000
60	65	137	257	528	791	1,520	2,430	4,290	8,760	15,800	25,600	52,700	95,700	152,000
70	60	126	237	486	728	1,400	2,230	3,950	8,050	14,600	23,600	48,500	88,100	139,000
80	56	117	220	452	677	1,300	2,080	3,670	7,490	13,600	22,000	45,100	81,900	130,000
90	52	110	207	424	635	1,220	1,950	3,450	7,030	12,700	20,600	42,300	76,900	122,000
100	50	104	195	400	600	1,160	1,840	3,260	6,640	12,000	19,500	40,000	72,600	115,000
125	44	92	173	355	532	1,020	1,630	2,890	5,890	10,600	17,200	35,400	64,300	102,000
150	40	83	157	322	482	928	1,480	2,610	5,330	9,650	15,600	32,100	58,300	92,300
175	37	77	144	296	443	854	1,360	2,410	4,910	8,880	14,400	29,500	53,600	84,900
200	34	71	134	275	412	794	1,270	2,240	4,560	8,260	13,400	27,500	49,900	79,000
250	30	63	119	244	366	704	1,120	1,980	4,050	7,320	11,900	24,300	44,200	70,000
300	27	57	108	221	331	638	1,020	1,800	3,670	6,630	10,700	22,100	40,100	63,400
350	25	53	99	203	305	587	935	1,650	3,370	6,100	9,880	20,300	36,900	58,400
400	23	49	92	189	283	546	870	1,540	3,140	5,680	9,190	18,900	34,300	54,300
450	22	46	86	177	266	512	816	1,440	2,940	5,330	8,620	17,700	32,200	50,900
500	21	43	82	168	251	484	771	1,360	2,780	5,030	8,150	16,700	30,400	48,100
550	20	41	78	159	239	459	732	1,290	2,640	4,780	7,740	15,900	28,900	45,700
600	19	39	74	152	228	438	699	1,240	2,520	4,560	7,380	15,200	27,500	43,600
650	18	38	71	145	218	420	669	1,180	2,410	4,360	7,070	14,500	26,400	41,800
700	17	36	68	140	209	403	643	1,140	2,320	4,190	6,790	14,000	25,300	40,100
750	17	35	66	135	202	389	619	1,090	2,230	4,040	6,540	13,400	24,400	38,600
800	16	34	63	130	195	375	598	1,060	2,160	3,900	6,320	13,000	23,600	37,300
850	16	33	61	126	189	363	579	1,020	2,090	3,780	6,110	12,600	22,800	36,100
900	15	32	59	122	183	352	561	992	2,020	3,660	5,930	12,200	22,100	35,000
950	15	31	58	118	178	342	545	963	1,960	3,550	5,760	11,800	21,500	34,000
1,000	14	30	56	115	173	333	530	937	1,910	3,460	5,600	11,500	20,900	33,100
1,100	14	28	53	109	164	316	503	890	1,810	3,280	5,320	10,900	19,800	31,400
1,200	13	27	51	104	156	301	480	849	1,730	3,130	5,070	10,400	18,900	30,000
1,300	12	26	49	100	150	289	460	813	1,660	3,000	4,860	9,980	18,100	28,700
1,400	12	25	47	96	144	277	442	781	1,590	2,880	4,670	9,590	17,400	27,600
1,500	11	24	45	93	139	267	426	752	1,530	2,780	4,500	9,240	16,800	26,600
1,600	11	23	44	89	134	258	411	727	1,480	2,680	4,340	8,920	16,200	25,600
1,700	11	22	42	86	130	250	398	703	1,430	2,590	4,200	8,630	15,700	24,800
1,800	10	22	41	84	126	242	386	682	1,390	2,520	4,070	8,370	15,200	24,100
1,900	10	21	40	81	122	235	375	662	1,350	2,440	3,960	8,130	14,800	23,400
2,000	NA	20	39	79	119	229	364	644	1,310	2,380	3,850	7,910	14,400	22,700

For SI: 1 inch = 25.4 mm, 1 foot = 304.8 mm, 1 pound per square inch = 6.895 kPa, 1-inch water column = 0.2488 kPa, 1 British thermal unit per hour = 0.2931 W, 1 cubic foot per hour = 0.0283 m^3/h, 1 degree = 0.01745 rad.

Notes:

1. NA means a flow of less than 10 cfh.
2. All table entries have been rounded to three significant digits.

SIZING FOR PIPING DOWNSTREAM OF PRESSURE REGULATOR SERVING GENERATOR G-1

Gas	Natural
Inlet Pressure	Less than 2 psi
Pressure Drop	0.5 in. w.c.
Specific Gravity	0.60

TABLE 402.4(2)
SCHEDULE 40 METALLIC PIPE

	PIPE SIZE (inch)													
Nominal	1/2	3/4	1	1 1/4	1 1/2	2	2 1/2	3	4	5	6	8	10	12
Actual ID	0.622	0.824	1.049	1.380	1.610	2.067	2.469	3.068	4.026	5.047	6.065	7.981	10.020	11.938
Length (ft)	Capacity in Cubic Feet of Gas Per Hour													
10	172	360	678	1,390	2,090	4,020	6,400	11,300	23,100	41,800	67,600	139,000	252,000	399,000
20	118	247	466	957	1,430	2,760	4,400	7,780	15,900	28,700	46,500	95,500	173,000	275,000
30	95	199	374	768	1,150	2,220	3,530	6,250	12,700	23,000	37,300	76,700	139,000	220,000
40	81	170	320	657	985	1,900	3,020	5,350	10,900	19,700	31,900	65,600	119,000	189,000
50	72	151	284	583	873	1,680	2,680	4,740	9,660	17,500	28,300	58,200	106,000	167,000
60	65	137	257	528	791	1,520	2,430	4,290	8,760	15,800	25,600	52,700	95,700	152,000
70	60	126	237	486	728	1,400	2,230	3,950	8,050	14,600	23,600	48,500	88,100	139,000
80	56	117	220	452	677	1,300	2,080	3,670	7,490	13,600	22,000	45,100	81,900	130,000
90	52	110	207	424	635	1,220	1,950	3,450	7,030	12,700	20,600	42,300	76,900	122,000
100	50	104	195	400	600	1,160	1,840	3,260	6,640	12,000	19,500	40,000	72,600	115,000
125	44	92	173	355	532	1,020	1,630	2,890	5,890	10,600	17,200	35,400	64,300	102,000
150	40	83	157	322	482	928	1,480	2,610	5,330	9,650	15,600	32,100	58,300	92,300
175	37	77	144	296	443	854	1,360	2,410	4,910	8,880	14,400	29,500	53,600	84,900
200	34	71	134	275	412	794	1,270	2,240	4,560	8,260	13,400	27,500	49,900	79,000
250	30	63	119	244	366	704	1,120	1,980	4,050	7,320	11,900	24,300	44,200	70,000
300	27	57	108	221	331	638	1,020	1,800	3,670	6,630	10,700	22,100	40,100	63,400
350	25	53	99	203	305	587	935	1,650	3,370	6,100	9,880	20,300	36,900	58,400
400	23	49	92	189	283	546	870	1,540	3,140	5,680	9,190	18,900	34,300	54,300
450	22	46	86	177	266	512	816	1,440	2,940	5,330	8,620	17,700	32,200	50,900
500	21	43	82	168	251	484	771	1,360	2,780	5,030	8,150	16,700	30,400	48,100
550	20	41	78	159	239	459	732	1,290	2,640	4,780	7,740	15,900	28,900	45,700
600	19	39	74	152	228	438	699	1,240	2,520	4,560	7,380	15,200	27,500	43,600
650	18	38	71	145	218	420	669	1,180	2,410	4,360	7,070	14,500	26,400	41,800
700	17	36	68	140	209	403	643	1,140	2,320	4,190	6,790	14,000	25,300	40,100
750	17	35	66	135	202	389	619	1,090	2,230	4,040	6,540	13,400	24,400	38,600
800	16	34	63	130	195	375	598	1,060	2,160	3,900	6,320	13,000	23,600	37,300
850	16	33	61	126	189	363	579	1,020	2,090	3,780	6,110	12,600	22,800	36,100
900	15	32	59	122	183	352	561	992	2,020	3,660	5,930	12,200	22,100	35,000
950	15	31	58	118	178	342	545	963	1,960	3,550	5,760	11,800	21,500	34,000
1,000	14	30	56	115	173	333	530	937	1,910	3,460	5,600	11,500	20,900	33,100
1,100	14	28	53	109	164	316	503	890	1,810	3,280	5,320	10,900	19,800	31,400
1,200	13	27	51	104	156	301	480	849	1,730	3,130	5,070	10,400	18,900	30,000
1,300	12	26	49	100	150	289	460	813	1,660	3,000	4,860	9,980	18,100	28,700
1,400	12	25	47	96	144	277	442	781	1,590	2,880	4,670	9,590	17,400	27,600
1,500	11	24	45	93	139	267	426	752	1,530	2,780	4,500	9,240	16,800	26,600
1,600	11	23	44	89	134	258	411	727	1,480	2,680	4,340	8,920	16,200	25,600
1,700	11	22	42	86	130	250	398	703	1,430	2,590	4,200	8,630	15,700	24,800
1,800	10	22	41	84	126	242	386	682	1,390	2,520	4,070	8,370	15,200	24,100
1,900	10	21	40	81	122	235	375	662	1,350	2,440	3,960	8,130	14,800	23,400
2,000	NA	20	39	79	119	229	364	644	1,310	2,380	3,850	7,910	14,400	22,700

For SI: 1 inch = 25.4 mm, 1 foot = 304.8 mm, 1 pound per square inch = 6.895 kPa, 1-inch water column = 0.2488 kPa, 1 British thermal unit per hour = 0.2931 W, 1 cubic foot per hour = 0.0283 m^3/h, 1 degree = 0.01745 rad.

Notes:

1. NA means a flow of less than 10 cfh.
2. All table entries have been rounded to three significant digits.

D3286024 100% FAA Warrenton Plumbing Cut Sheets

Commercial Electric Water Heaters

DURA-POWER™

Designed for use as a recovery heater having its own storage tank. Available in upright standard models (DEN) and lowboy models (DEL).

GLASSLINED TANK

- Thirteen sizes; 6 thru 119 gallon capacity. Tank interior is coated with glass specially designed by A. O. Smith for water heater use.

ELEMENTS

- Zinc plated copper sheaths for longer life. Medium watt density means lower surface temperature to minimize scale build-up and more surface to heat water. Element sizes from 1.5 to 6 KW. Maximum input 12 KW (see chart).

STANDARD VOLTAGES

- 120, 277 single phase and 208, 240 and 480V unbalanced three-phase delta; easily converted to single-phase at terminal block (except 208V with 5500 watt elements). Single element heaters, single-phase only.

TERMINAL BLOCK

- Factory-installed. Just bring the service to heater and connect to block. Terminal block not supplied on 120V & 277 volt models. (No junction box on DEL6-20)

CONTROLS

- Temperature control (adjustable through a range of 110° to 170°F on single element and 120° to 181°F on dual element) and manual reset high temperature cutoff per element

CSA CERTIFIED AND ASME RATED T&P RELIEF VALVE

SIMPLIFIED CIRCUITRY, COLOR CODED FOR EASE OF SERVICE

ANODE ROD FOR MAXIMUM CORROSION PROTECTION

CABINET HAS BONDERIZED UNDERCOAT WITH BAKED ENAMEL FINISH

TOP INLET AND OUTLET OPENINGS

DRAIN VALVE (EXCLUDES DEL 6-20)

UL APPROVED FIELD CONVERSION PROGRAM

COMPLIANCE

- Meets the standby loss Requirements of the U.S. Department of Energy and current edition of ASHRAE/IES 90.1.

LIMITED WARRANTY OUTLINE

- If the tank should leak any time during the first three years, under the terms of the warranty, A. O. Smith will furnish a replacement heater; installation, labor, handling and local delivery extra. THIS OUTLINE IS NOT A WARRANTY. For complete information consult the written warranty or A. O. Smith Water Products Company.

DEN-40

DEL-30

Low Lead Content

AHRI CERTIFIED®
www.ahridirectory.org

© October 2016 A. O. Smith Corporation. All rights reserved.

www.hotwater.com | 800-527-1953 Toll-Free USA | A. O. Smith Corporation | 500 Tennessee Waltz Parkway | Ashland City, TN 37015

DHWH-1 - Domestic Water Heater

Commercial Electric Water Heaters

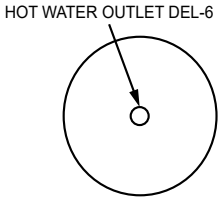

TOP VIEW
DEL 6/10/15/20

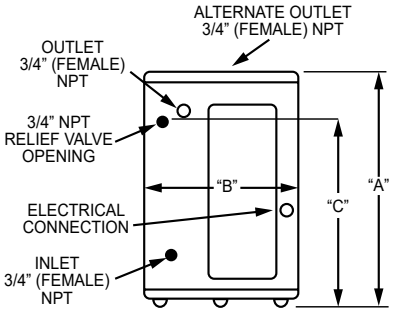

FRONT VIEW
DEL 6/10/15/20
*(NO SIDE OUTLET AVAILABLE FOR DEL-6 MODELS)

ROUGH-IN DIMENSIONS

Model Number	No. of Elements	Tank Capacity		A		B		C		D		Shipping Weight	
		US Gals	Litres	Inches	mm	Inches	mm	Inches	mm	Inches	mm	lbs.	Kg.
DEL-6	1	6	23	15-1/2	394	14-1/4	362	11	279	N/A	N/A	35	15.9
DEL-10	1	10	38	18-1/4	464	18	457	12-1/2	318	N/A	N/A	54	24.5
DEL-15	1	15	57	26	660	18	457	20-1/2	521	N/A	N/A	58	26.3
DEL-20	1	20	76	22-1/4	565	21-3/4	552	15-3/8	391	N/A	N/A	73	33.1

* No side outlet available on DEL-6 Model

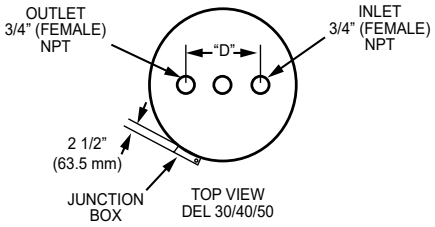

TOP VIEW
DEL 30/40/50

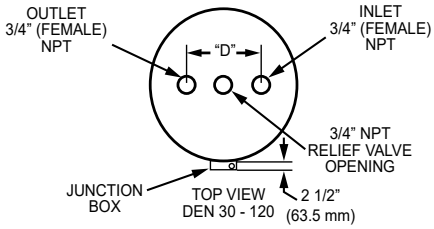

TOP VIEW
DEN 30 - 120

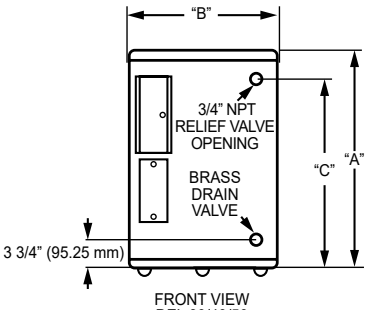

FRONT VIEW
DEL 30/40/50

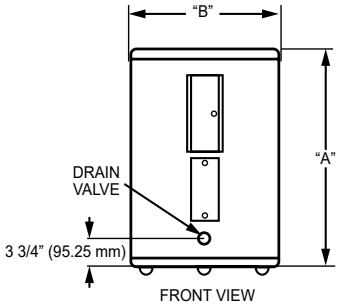

FRONT VIEW
DEN 30-120

ROUGH-IN DIMENSIONS

Model Number	No. of Elements	Tank Capacity		A		B		C		D		Shipping Weight	
		US Gals	Litres	Inches	mm	Inches	mm	Inches	mm	Inches	mm	lbs.	Kg.
DEL-30	2	30	114	30-7/8	784	21-3/4	552	24-1/8	613	8	203	100	45.4
DEL-40	2	40	151	32-1/4	819	24	610	25-9/16	649	8	203	125	56.7
DEL-50	2	50	189	32-1/4	819	26-1/2	673	25-1/8	638	8	203	166	75.3
DEN-30	2	30	114	34-1/2	876	20-1/2	521	21	533	8	203	98	44.5
DEN-40	2	40	151	45-1/8	1146	20-1/2	521	N/A	N/A	8	203	113	51.3
DEN-52	2	50	189	54-7/8	1394	20-1/2	521	N/A	N/A	8	203	131	59.4
DEN-66	2	66	250	60-3/4	1543	21-3/4	552	N/A	N/A	8	203	176	79.8
DEN-80	2	80	303	59-3/8	1508	24	610	N/A	N/A	8	203	211	95.7
DEN-120	2	119	450	62-7/16	1586	29-3/8	746	N/A	N/A	8	203	326	147.9

Commercial Electric Water Heaters

ELEMENT AVAILABILITY CHART (LIGHT-DUTY COMMERCIAL ELECTRIC)

Models & Elements	Voltage	Wiring	kW Input Available									
6-Gallon Models Single-Element	120V	-	1.5	2	2.5	3						
	208V	-	1.5	2	2.5	3						
	240V	-	1.5	2	2.5	3						
	277V	-	1.5	2	2.5	3						
	480V	-		2	2.5	3						
10-Gallon through 20-Gallon Models Single-Element	120V	-	1.5	2	2.5	3						
	208V	-	1.5	2	2.5	3	3.5	4	4.5	5	5.5	6
	240V	-	1.5	2	2.5	3	3.5	4	4.5	5	5.5	6
	277V	-	1.5	2	2.5	3		4	4.5	5		6
	480V	-		2	2.5	3		4	4.5	5	5.5	6
30-Gallon through 120-Gallon Models Double-Element	120V	Interlock	1.5	2	2.5	3						
		Simultaneous	3	4	5	†						
	208V	Interlock	1.5	2	2.5	3	3.5	4	4.5	5	5.5	6
		Simultaneous	3	4	5	6	7	8	9	10**	11**	†
	240V	Interlock	1.5	2	2.5	3	3.5	4	4.5	5	5.5	6
		Simultaneous	3	4	5	6	7	8	9	10	11	12**
	277V*	Interlock	1.5	2	2.5	3		4	4.5	5		6
		Simultaneous	3	4	5	6		8	9	10		12
	480V	Interlock		2	2.5	3		4	4.5	5	5.5	6
		Simultaneous		4	5	6		8	9	10	11	12

6 gallon model not available above 3kW
6/10/15/20 gallon models all A6 circuit (2 wire) only
† Exceeds maximum amp draw.
** Simultaneous only in 3ph

ELECTRIC CHARACTERISTICS

Electric Characteristics											
Non Simultaneous and Single Element Operation 6 - 120 Gallon				Simultaneous Dual Element Operation (Single Phase Connection) 30 - 120 Gallon				Simultaneous Dual Element Operation (Unbalanced Three Phase connection) 30 - 120 Gallon			
Element Wattage	Full Load Current in Amperes (Terminals - L1, L2)			Element Wattage	Full Load Current in Amperes (Terminals - L1, L2)			Element Wattage	Full Load Current in Amperes (Terminals - L2 / Terminal L1 & L3)		
Upper / Lower	208V	240V	480V	Upper / Lower	208V	240V	480V	Upper / Lower	208V	240V	480V
1500	7.2	6.3	3.2	1500/1500	14.4	12.5	6.3	1500/1500	12.4/7.2	10.8/6.3	5.4/3.2
2000	9.6	8.3	4.2	2000/2000	19.2	16.6	8.3	2000/2000	16.6/9.6	14.4/8.3	7.2/4.2
2500	12.0	10.4	5.2	2500/2500	24	20.8	10.4	2500/2500	20.8/12.0	18.0/10.4	9.0/5.2
3000/3000	14.4	12.5	6.3	3000/3000	28.8	25	12.5	3000/3000	25.0/14.4	21.6/12.5	10.8/6.3
4000/4000	19.2	16.7	8.3	4000/4000	38.4	33.3	16.6	4000/4000	33.3/19.2	28.8/16.7	14.4/8.3
4500/4500	21.6	18.8	9.4	4500/4500	43.2	37.5	18.75	4500/4500	37.4/21.6	32.4/18.8	16.2/9.4
5000/5000	24.0	20.8	10.4	5000/5000	NA	41.6	20.8	5000/5000	41.6/24.0	36.0/20.8	18.0/10.4
6000/6000	28.8	25.0	12.5	6000/6000	NA	NA	25	6000/6000	NA	43.3/25.0	21.6/12.5

Commercial Electric Water Heaters

RECOVERY CAPACITIES

Element Wattage (Upper/ Lower)	Input	U. S. Gallons/Hr and Litres/Hr at Temperature Rise Indicated											
		F°	36	40	54	60	72	80	90	100	108	120	126
	kW	C°	20	22.2	30	33.3	40	44.4	50	55.5	60	66.6	70
Non-Simulataneous Operation													
/1500	1.5	GPH	17	15	11	10	8	8	7	6	6	5	5
		LPH	64	58	43	38	32	29	26	23	21	19	18
/2000	2	GPH	23	20	15	14	11	10	9	8	8	7	6
		LPH	85	77	57	51	43	38	34	31	28	26	24
/2500	2.5	GPH	28	25	19	17	14	13	11	10	9	8	8
		LPH	107	96	71	64	53	48	43	38	36	32	30
3000/3000	3	GPH	34	30	23	20	17	15	14	12	11	10	10
		LPH	128	115	85	77	64	58	51	46	43	38	37
4000/4000	4	GPH	45	41	30	27	23	20	18	16	15	14	13
		LPH	170	153	114	102	85	77	68	61	57	51	49
4500/4500	4.5	GPH	51	46	34	30	25	23	20	18	17	15	14
		LPH	192	173	128	115	96	86	77	69	64	58	55
5000/5000	5	GPH	56	51	38	34	28	25	23	20	19	17	16
		LPH	213	192	142	128	107	96	85	77	71	64	61
6000/6000	6	GPH	68	61	45	41	34	30	27	24	23	20	19
		LPH	256	230	170	153	128	115	102	92	85	77	73
Simulataneous Operation													
3000/3000	6	GPH	68	61	45	41	34	30	27	24	23	20	19
		LPH	256	230	170	153	128	115	102	92	85	77	73
4000/4000	8	GPH	90	81	60	54	45	41	36	32	30	27	26
		LPH	341	307	227	205	170	153	136	123	114	102	97
4500/4500	9	GPH	101	91	68	61	51	46	41	36	34	30	29
		LPH	384	345	256	230	192	173	153	138	128	115	110
5000/5000	10	GPH	113	101	75	68	56	51	45	41	38	34	32
		LPH	426	384	284	256	213	192	170	153	142	128	122
6000/6000	12	GPH	135	122	90	81	68	61	54	49	45	41	39
		LPH	511	460	341	307	256	230	205	184	170	153	146

Recovery capacities at 100° F rise equal: for non-simultaneous element operation = 4.1 gal. x kW of one element; for simultaneous element operation = 4.1 gal. x 2/3 kW of both elements.
For other rises multiply element kW as previously explained by 410 and divide by temperature rise. Full load current for single phase = total watts/voltage.

SPECIFICATION

The water heaters(s) shall be Dura-Power™ Model(s) No. _____ as manufactured by A. O. SMITH or an approved equal. Heater(s) shall be rated at _____kW, _____volts, _____-phase, 60 cycle AC, and listed by Underwriters' Laboratories. Models shall meet the standby loss requirements of the U.S. Department of energy and current edition of ASHRAE/IES 90.1. Tank(s) shall be _____gallon capacity. Heater(s) shall have 150 psi working pressure and be equipped with extruded high density anode rod. All internal surfaces of the heater(s) exposed to water shall be glasslined with an alkaline borosilicate composition that has been fused-to-steel by firing at a temperature range of 1400°F to 1600°F. Electric heating elements shall be medium watt density with zinc plated copper sheath. Each element shall be controlled by an individually mounted thermostat and high temperature cutoff switch. The outer jacket shall be of backed enamel finish and shall enclose the tank with foam insulation. Electrical junction box with heavy duty terminal block shall be provided (except on 120V & 277V {no junction box on DEL-6 thru 20}). The drain valve shall be located in the front for ease of servicing. Heater tank shall have a three year limited warranty as outlined in the written warranty. Fully illustrated instruction manual to be included.

For technical information, call 800-527-1953. A. O. Smith Corporation reserves the right to make product changes or improvements without prior notice.

© October 2016 A. O. Smith Corporation. All rights reserved.

www.hotwater.com | 800-527-1953 Toll-Free USA | A. O. Smith Corporation | 500 Tennessee Waltz Parkway | Ashland City, TN 37015

Bell & Gossett
a xylem brand

DCP-1 - Domestic Hot Water Circulation Pump

SUBMITTAL
A-429F

JOB: **REPRESENTATIVE:**

UNIT TAG: **ORDER NO.** **DATE:**
ENGINEER: **SUBMITTED BY:** **DATE:**
CONTRACTOR: **APPROVED BY:** **DATE:**

ecocirc® XL

NSF/ANSI 372 c UL us LISTED

High Efficiency Large Wet Rotor Circulator with Electronically Commutated Motor (ECM)

DESCRIPTION

The ecocirc® XL circulator is designed with a highly efficient electronically commutated permanent magnet motor (ECM Technology). Cast Iron model is designed for closed loop hydronic heating and cooling systems, and Stainless Steel body pump for plumbing systems or open loop heating and cooling systems.

CONSTRUCTION MATERIALS

Pump Body: Cast Iron or Stainless Steel
Impeller: Poly-phenylene Sulfide or Stainless Steel
Shaft: AISI 420 Stainless Steel
Rotor: Permanent Magnet
Bearing: Carbon Sleeve
Gasket/O-Ring: EPDM
All Other Wetted Parts: AISI 304 Stainless Steel
Motor Type: Electronically Commutated Permanent Magnet Motor
Insulation Class: F

SPECIFICATIONS

MODEL NO. _____

FLOW _____ HEAD _____

HP _____ RPM _____

VOLTAGE _____ CYCLE _____ PHASE _____

SPECIALS _____

OPERATING DATA

Maximum Working Pressure: 175 psi (12 Bar)
Minimum Working Temperature: 14°F (-10°C)
Maximum Working Temperature: 230°F (110°C)
Ambient Temperature Range: 32°F - 104°F (0°C - 40°C)

SCHEDULE

CAST IRON BODY		STAINLESS STEEL BODY		RATED MOTOR CHARACTERISTICS					
MODEL NUMBER	PART NUMBER	MODEL NUMBER	PART NUMBER	HP*	VOLTAGE	PHASE	Hz	WATTS RANGE	AMP RANGE
ecocirc XL 20-35	104300	ecocirc XL N 20-35	104450LF	1/12	115	1	50/60	6 - 85	0.1 - 1.3
ecocirc XL 36-45	104301	ecocirc XL N 36-45	104451LF	1/6	115	1	50/60	20 - 200	0.1 - 3.0
ecocirc XL 36-45	104302	ecocirc XL N 36-45	104452LF	1/6	208-230	1	50/60	20 - 200	0.1 - 1.5
ecocirc XL 15-75	104303	ecocirc XL N 15-75	104453LF	1/6	115	1	50/60	30 - 150	0.1 - 2.3
ecocirc XL 15-75	104304	ecocirc XL N 15-75	104454LF	1/6	208-230	1	50/60	30 - 150	0.1 - 1.1
ecocirc XL 55-45	104306	ecocirc XL N 55-45	104456LF	1/2	208-230	1	50/60	30 - 500	0.2 - 2.0
ecocirc XL 20-140	104308	ecocirc XL N 20-140	104458LF	1/2	208-230	1	50/60	35 - 470	0.2 - 2.0
ecocirc XL 65-130	104309	ecocirc XL N 65-130	104459LF	1	208-230	1	50/60	45 - 825	0.5 - 3.5
ecocirc XL 40-200	104312	ecocirc XL N 40-200	104462LF	1	208-230	1	50/60	45 - 825	0.5 - 3.5
ecocirc XL 70-145	104315	ecocirc XL N 70-145	104465LF	2	208-230	1	50/60	55 - 1400	0.6 - 6.0
ecocirc XL 40-275	104318	ecocirc XL N 40-275	104468LF	2	208-230	1	50/60	50 - 1400	0.5 - 6.0
ecocirc XL 65-130	104310	ecocirc XL N 65-130	104460LF	1	208-230/400-460	3	50/60	50 - 800	0.5 - 2.8/2.0
ecocirc XL 40-200	104313	ecocirc XL N 40-200	104463LF	1	208-230/400-460	3	50/60	50 - 800	0.5 - 2.8/2.0
ecocirc XL 95-160	104321	ecocirc XL N 95-160	104471LF	2	208-230/400-460	3	50/60	50 - 1250	0.5 - 4.4/2.0
ecocirc XL 27-320	104323	ecocirc XL N 27-320	104473LF	2	208-230/400-460	3	50/60	50 - 1500	0.5 - 4.4/3.0
ecocirc XL 110-180	104326	ecocirc XL N 110-180	104476LF	3	400-460	3	50/60	50 - 2000	0.5 - 3.7
ecocirc XL 45-375	104328	ecocirc XL N 45-375	104478LF	3	400-460	3	50/60	50 - 2150	0.5 - 4.0

Note: Where potable water is pumped, use a stainless steel booster. ecocirc XL pumps are recommended for indoor use only.

* Nominal HP

xylem
Let's Solve Water

DIMENSIONS AND WEIGHTS

MODEL NO	Nominal Motor HP	DIMENSIONS - INCHES (mm)						APPROX. SHIPPING WEIGHT LBS. (KG)	
		A	B	C	D	E	F	Cast Iron	Stainless Steel
ecocirc XL 20-35	1/12	9.94 (252)	6.38 (162)	8.20 (208)	4.19 (106)	7.20 (183)	4.72 (120)	19.8 (9)	22 (10)
ecocirc XL 36-45	1/6	9.94 (252)	6.38 (162)	8.20 (208)	4.19 (106)	7.20 (183)	4.72 (120)	19.8 (9)	22 (10)
ecocirc XL 15-75	1/6	11.04 (280)	8.5 (216)	8.39 (213)	5.19 (132)	7.57 (192)	4.72 (120)	26.4 (12)	28.6 (13)
ecocirc XL 55-45	1/2	11.89 (302)	6.38 (162)	10.18 (258)	4.19 (106)	8.12 (206)	5.02 (127)	26.4 (12)	28.6 (13)
ecocirc XL 20-140	1/2	13.39 (340)	11.5 (292)	10.41 (264)	5.19 (132)	8.20 (208)	5.02 (127)	35.2 (16)	39.6 (18)
ecocirc XL 65-130	1	14.84 (377)	11.5 (292)	11.80 (299)	4.62 (117)	9.53 (242)	5.77 (146)	39.6 (18)	44 (20)
ecocirc XL 40-200	1	15.17 (385)	11.5 (292)	11.80 (299)	5.19 (132)	9.53 (242)	5.77 (146)	41.8 (19)	46.2 (21)
ecocirc XL 70-145	2	14.84 (377)	11.5 (292)	11.80 (299)	4.62 (117)	9.53 (242)	5.77 (146)	38.4 (17.4)	44 (20)
ecocirc XL 40-275	2	16.04 (407)	12.0 (305)	12.57 (319)	6.00 (152)	10.07 (256)	5.77 (146)	49.6 (22.5)	55 (25)
ecocirc XL 65-130	1	14.96 (380)	11.5 (292)	11.85 (301)	2.87 (73)	10.43 (265)	5.31 (135)	39.6 (18)	44 (20)
ecocirc XL 40-200	1	15.23 (387)	11.5 (292)	11.85 (301)	5.19 (132)	10.43 (265)	5.31 (135)	35.2 (16)	39.6 (18)
ecocirc XL 95-160	2	14.44 (367)	11.5 (292)	11.37 (289)	2.87 (73)	10.43 (265)	5.31 (135)	39.6 (18)	44 (20)
ecocirc XL 27-320	2	15.27 (388)	14.17 (360)	11.81 (300)	6.00 (152)	10.43 (265)	5.31 (135)	49.6 (22.5)	55 (25)
ecocirc XL 110-180	3	14.44 (367)	11.5 (292)	11.37 (289)	2.87 (73)	10.43 (265)	5.31 (135)	38.4 (17.4)	44 (20)
ecocirc XL 45-375	3	16.14 (410)	14.17 (360)	12.67 (321)	6.00 (152)	10.43 (265)	5.31 (135)	49.6 (22.5)	55 (25)

MODEL NO	FLANGE SIZE INCHES - NPT	# of Bolts	DIMENSIONS - INCHES (mm)				B&G COMPANION FLANGE (Set of 2)	
			G	H	J	K	CAST IRON PN	STAINLESS STEEL PN
ecocirc XL 20-35	3/4, 1, 1-1/4, **1-1/2**	2	4.19 (106)	3.16 (80)	2.62 (66)	0.47 (12)	101201 - 101204	101208LF - 101211LF
ecocirc XL 36-45	3/4, 1, 1-1/4, **1-1/2**	2	4.19 (106)	3.16 (80)	2.62 (66)	0.47 (12)	101201 - 101204	101208LF - 101211LF
ecocirc XL 15-75	2	4	5.18 (132)	4.06 (103)	-	0.56 (14)	101215	101216LF
ecocirc XL 55-45	3/4, 1, 1-1/4, **1-1/2**	2	4.19 (106)	3.16 (80)	2.62 (66)	0.47 (12)	101201 - 101204	101208LF - 101211LF
ecocirc XL 20-140	2	4	5.19 (132)	4.06 (103)	-	0.56 (14)	101215	101216LF
ecocirc XL 65-130	1, 1-1/4, **1-1/2**	2	4.62 (117)	3.44 (87)	2.86 (73)	0.47 (12)	101205 - 101207	101212LF - 101214LF
ecocirc XL 40-200	2	4	5.19 (132)	4.06 (103)	-	0.56 (14)	101217	101216LF
ecocirc XL 70-145	1, 1-1/4, 1-1/2	2	4.62 (117)	3.44 (87)	2.86 (73)	0.47 (12)	101205-101207	101212LF-101214LF
ecocirc XL 40-275	3	4	6.00 (152)	5.06 (129)	-	0.53 (13)	101217	101218LF
ecocirc XL 65-130	1, 1-1/4, 1-1/2	2	4.62 (117)	3.44 (87)	2.86 (73)	0.47 (12)	101205 - 101207	101212LF - 101214LF
ecocirc XL 40-200	2	4	5.19 (132)	4.06 (103)	-	0.56 (14)	101215	101216LF
ecocirc XL 95-160	1, 1-1/4, 1-1/2	2	4.62 (117)	3.44 (87)	2.86 (73)	0.47 (12)	101205 - 101207	101212LF - 101214LF
ecocirc XL 27-320	3	4	6.00 (152)	5.06 (129)	-	0.53 (13)	101217	101218LF
ecocirc XL 110-180	1, 1-1/4, 1-1/2	2	4.62 (117)	3.44 (87)	2.86 (73)	0.47 (12)	101205-101207	101212LF-101214LF
ecocirc XL 45-375	3	4	6.00 (152)	5.06 (129))	-	0.53 (13)	101217	101218LF

1-1/2" is the diameter of the suction and discharge for the 2-bolt models.

SINGLE PHASE PUMP DIMENSIONS

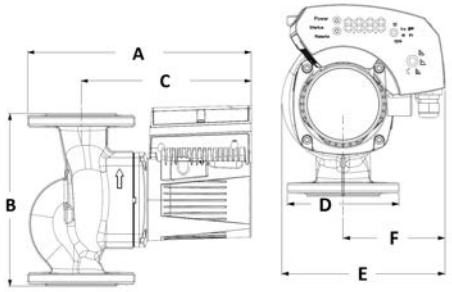

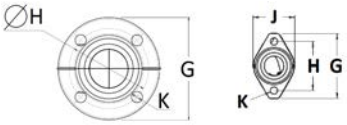

THREE PHASE PUMP DIMENSIONS

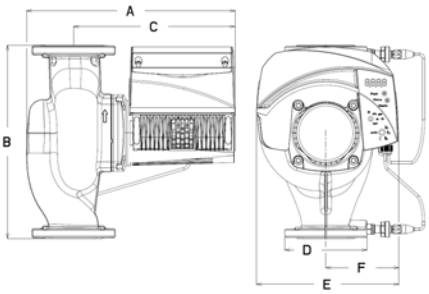

ecocirc XL High Flow Performance Range Curve

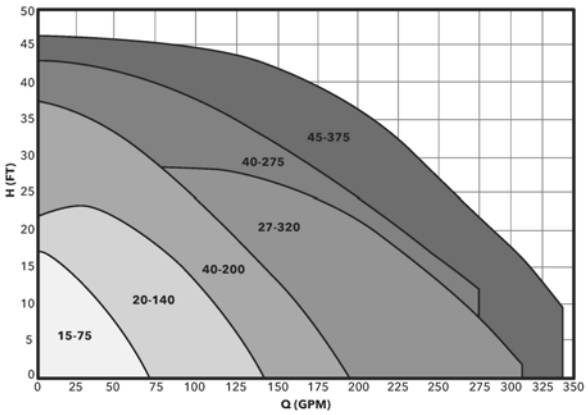

ecocirc XL High Head Performance Range Curve

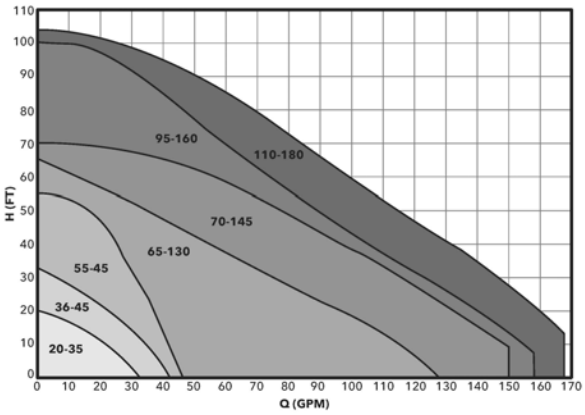

SAFETY STANDARDS AND PROTECTION

- Enclosure: Class 2, IP44 (equivalent to NEMA Type 2)
- UL Listed to UL 778; UL 1004-1, 1004-7; and UL 60730-1
- cUL Listed to C22.2 #108
- Electronically Thermally Protected (Integrated Motor Protection)
- Motor Insulation Class: F
- Stainless steel models are NSF/ANSI-372 certified.

STANDARD OPERATING MODES

CONSTANT SPEED

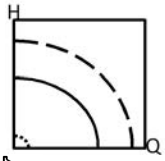

The pump maintains a constant speed at any flow rate. The desired speed is set on the interface panel of the pump.

CONSTANT PRESSURE (Δp-c)

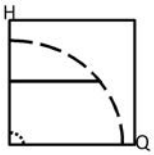

The pump maintains a constant differential pressure at any flow demand until the maximum speed is reached. The desired head of the pump can be set via user interface. Recommended for use in systems with small or constant pressure losses.

PROPORTIONAL PRESSURE (Δp-v)

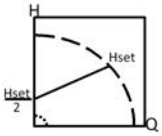

The differential pressure continuously increases or deceases based on the flow demand. The set point head can be set on the pump user interface. Use for systems with large pressure losses.

NIGHT MODE

The pump will automatically reduce speed when there is an abrupt change in fluid temperature. The change in fluid temperature is from a boiler operating in night time setback mode. The built-in temperature sensor is used. (Fixed Speed, Constant Pressure, Proportional Pressure)

TEMPERATURE DEPENDENT OPERATING MODES

SET POINT TEMPERATURE (Δp-T)

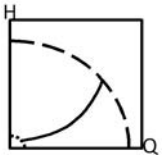

The nominal differential pressure set point is modified based on the fluid temperature.Uses the built-in temperature sensor.

SET POINT TEMPERTURE (T)

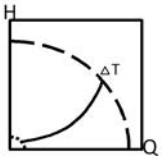

The pump maintains a constant temperature in a system, such as domestic hot water system or a single temperature heating system. Uses the built-in temperature sensor.

DIFFERENTIAL TEMPERTURE (ΔT)

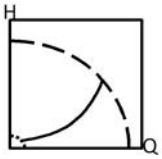

The pump maintains a constant differential temperature between the built-in and external temperature sensors.

INPUT SIGNALS

- One 0-10V (Analog): Speed Control by external controller
- One 4-20mA (Analog): Connection with an external differential pressure sensor for pressure control mode (two differential pressure sensor ranges: 0-15 and 0-30 PSIG) on single phase models.
- Two absolute pressure sensors 4-20mA (Analog) input for three phase models.
- One external temperature sensor input for Differential Temp operating mode. Sensor Type: KYT38, P/N: 104502
- One built-in temperature sensor for Set Point Temp and Differential-Temp operating mode.

REMOTE BUILDING MANAGEMENT SYSTEM CAPABILITIES

- The pump can be monitored or controlled by a signal from BMS (Building Management System). Built-in protocols are BACnet and Modbus. Direct connection to a PC is available.
- An optional wireless module can be added to create a short range wireless field for remote connection to the pump. An internet browser can be used to program the advanced settings. Module P/N: 104500

START/STOP CONNECTIONS: Connect to external dry contact relay or use with a thermostat.

OUTPUT RELAY(single phase): Normally Open Dry Contact Relay for Fault Mode indication.
OUTPUT RELAYS (three phase): Two Normally Open Dry Contact Relays for Fault Mode and Run indication.

ONBOARD USER INTERFACE

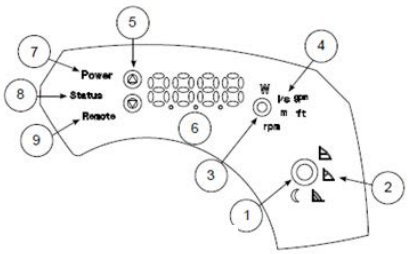

1. Control mode button
2. Control mode indicators
3. Parameter button
4. Parameter indicators
5. Setting buttons
6. Numeric display
7. Power indicator
8. Status / Fault indicator
9. Remote control indicator

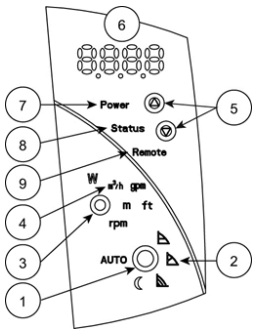

Xylem Inc.
8200 N. Austin Avenue
Morton Grove, IL 60053
Phone: (847)966-3700 Fax: (847)965-8379
www.bellgossett.com
Bell & Gossett is a trademark of Xylem Inc. or one of its subsidiaries.
© 2017 Xylem Inc.

THERM-X-TROL®

Thermal Expansion Tanks: Diaphragm ST-C Series ASME

AMTROL

150 PSIG Working Pressure

ET-1 - Expansion Tank

Construction

Shell	ST-5C, ST-12C, ST-20VC: Deep Drawn Steel ST-30VC through ST-210VC: Steel Head & Shell
Diaphragm	Heavy Duty Buty NSF/ANSI 61
Liner	Antimicrobial Polypropylene w/Anti-Legionella Protection
System Connection	Stainless Steel
Finish	Red Oxide Primer
Water Circulator	Turbulator™ (Deep Drawn Models)
Air Valve	Schrader Valve w/ EPDM Seat
Factory Precharge	55 PSIG (3.8 bar)

Performance

Maximum Operating Temperature	200°F (93°C)
Maximum Working Pressure	150 PSIG (10.3 bar)
Warranty	1-Year

Application

- For use in closed, domestic hot water systems to control pressure buildup.
- Fixed diaphragm construction.
- Designed and constructed per ASME Code Section VIII, Division 1.
- Tested to JIS Z 2801 for reduction of Legionella, Staphylococcus and E. coli.
- Follows ASHRAE 188 Anti-Legionella guidelines.
- All models available with optional sight glass.
- Seismic restraints available on stand models only.
- Deep drawn models are lighter, stronger and more compact than traditional head and shell construction.

Deep Drawn In-Line & Stand Models

Model Number	Tank Volume		Max. Accept. Factor	A Tank Diameter		B Tank Height		System Conn. (NPTM)	Shipping Weight	
	Gal	Lit		In	mm	In	mm	In	Lbs	Kg
ST-5C-DD	2.0	8	.45	8	203	14	356	¾	10	5
ST-12C-DD	6.4	24	.50	12	305	18	457	¾	26	12
ST-20VC-DD	8.6	33	.37	12	305	22	559	¾	36	16
ST-30VC-DD	16.5	63	.68	15	381	25	636	¾	48	22
ST-42VC-DD	23.0	88	.49	15	381	33	838	¾	68	31

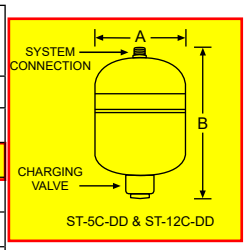

ST-5C-DD & ST-12C-DD

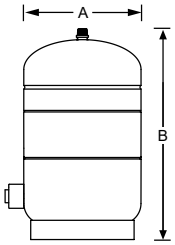

ST-20VC-DD

Head & Shell Stand Models

Model Number	Tank Volume		Max. Accept. Factor	A Tank Diameter		B Tank Height		System Conn. (NPTF)	Shipping Weight	
	Gal	Lit		In	mm	In	mm	In	Lbs	Kg
ST-60VC	25.0	95	.44	16	406	32	813	¾	85	39
ST-70VC	34.0	129	.32	16	406	45	1143	¾	99	45
ST-80VC	53.0	201	.66	24	610	37	940	1¼	224	102
ST-120VC	68.0	257	.51	24	610	44	1118	1¼	266	121
ST-180VC	77.0	291	.45	24	610	49	1245	1¼	285	129
ST-210VC	90.0	341	.39	24	610	57	1448	1¼	319	145

All dimensions and weights are approximate.

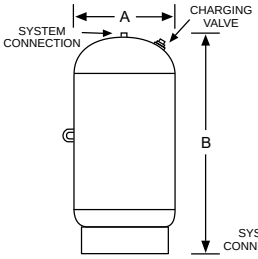

ST-30VC THROUGH ST-70VC

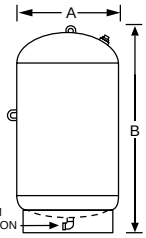

ST-80VC THROUGH ST-210VC

188 AntiLegionella

Job Name _____ Notes _____

Engineer _____

Contractor _____

P.O. No. _____

Sales Rep. _____

Model No. _____

Antimicrobial. Turbulator DEEP DRAWN MODELS

NSF CERTIFIED TO NSF/ANSI 61

ISO 9001:2015 CERTIFIED

MADE IN USA

LOW-LEAD IAPMO R&T

TMV-1 - Thermostatic Mixing Valve

Submittal Data Sheet S-1233E-LF
August, 2018

NEXT GENERATION HIGH LOW SYSTEM

ECO-MIX ™

TM-820B-LF-DT-_____

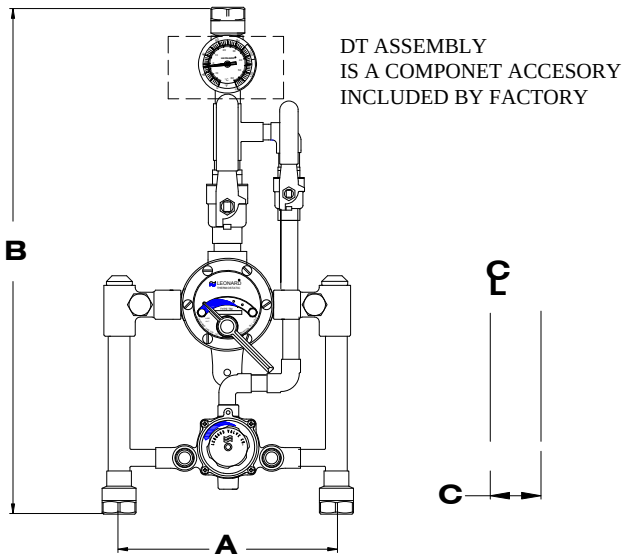

A=10 ½" +/- 1/2" **B**=23 ½" **C**=2 5/8"

- Large Type TM Thermostatic water mixing valve, adjustable high temperature limit stop*, inlet checkstops, wall support, outlet ball valve
- Small Type TM Thermostatic water mixing valve, adjustable high temperature limit stop*, inlet checkstops, outlet ball valve
- 1 " inlets, 1 1/4" outlet (25mm X 32mm)
- 1 GPM (3.7 l/min) minimum flow capacity
- Maximum operating pressure: 125 PSI (860 KPA)
- Color-coded dial thermometer (0 to 140°F, -10 to 60°C)
- Inlet manifold piping
- Locking temperature regulators
- Factory assembled and tested

This product is certified to meet Low Lead requirements of wetted surface area containing less than 0.25% lead by weight. All other component accessories, the sum total of which comprise the wetted surface of this product, contain less than one quarter of one percent lead by weight.

OPTIONS:

____**SUFFIX CP –** Chrome plated (Material finish may vary)
____**SUFFIX IT –** Inlet Thermometers (shipped loose)
____**SUFFIX TC** – Test connection (shipped loose)
____**SUFFIX HT –** High temperature thermometer (20 to 240°F, -6 to 115°C)

Valve assembly is ASSE 1017 Certified

Valve assembly is CSA Certified

MINIMUM FLOW (GPM)	SYSTEM PRESSURE DROP (PSIG)										
	5	10	15	20	25	30	35	40	45	50	PSI
(l/min)	,3	.7	.97	1.4	1.7	2.1	2.4	2.8	3.1	3.4	BAR
1.0	26	40	48	58	63	68	74	79	84	89	GPM
(3.7)	98	151	182	220	238	257	280	299	318	337	l/min

+NOTE: The valve will maintain temperature with 0.5GPM flow from the domestic hot water loop when properly installed near the hot water source with a continuously operating recirculation pump.

NOTE: Flowrates will vary depending on existing field conditions. Leonard Valve Company always recommends using CASPAK® sizing software for proper valve sizing and model number applications.

Note: Leonard Valve Company reserves the right of product, or design modifications without notice or obligation.

CAUTION! All thermostatic water mixing valves have limitations. They will NOT provide the desired accuracy outside of their flow capacity range. Consult the Flow Capacity Chart and DO NOT OVERSIZE. Minimum flow must be no less than as indicated.

***NOTE:** A limit stop, set for 120°F (49°C), is simply a mechanical setting to prevent excessive handle rotation. If incoming water is hotter than 150°F (65.5°C), the temperature of the factory test, the valve when turned to full HOT may deliver water in excess of 120°F and the limit stop MUST BE RESET BY THE INSTALLER

Engineer's Approval

Job # _____

Arch/Eng. _____

Contractor _____

WARNING: This product can expose you to chemicals including lead, which is known to the State of California to cause cancer. For more information, go to www.P65Warnings.Ca.gov

Note: The models shown represent Leonard Products which are believed to be equivalent in type and function to items specified. Leonard Valve Company is not responsible for errors or omissions due to differences in interpretations of information provided.

LEONARD®
WATER TEMPERATURE CONTROLS

1360 Elmwood Avenue, Cranston, RI 02910 USA
Phone: 401.461.1200 Fax: 401.941.5310
Email: info@leonardvalve.com
Web Site: http://www.leonardvalve.com

PIPING METHOD #2, only for systems circulating 8 GPM or less. See Method #5 for circulated flow rates above 8 GPM.

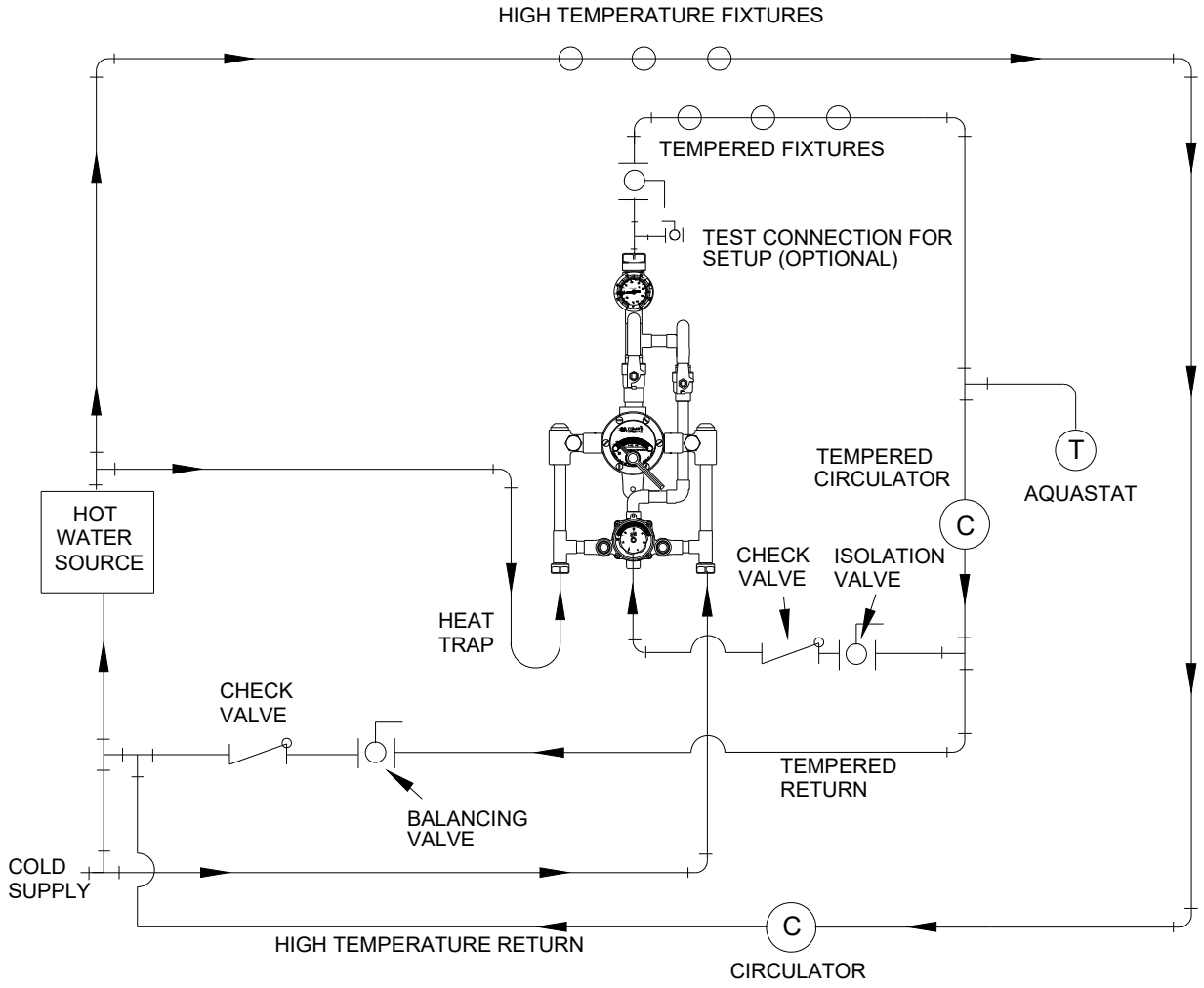

(OPTIONAL) TEST CONNECTION

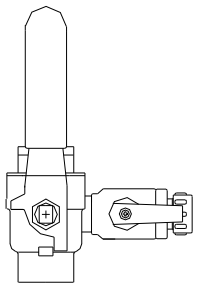

LEONARD®
WATER TEMPERATURE CONTROLS

1360 Elmwood Avenue, Cranston, RI 02910 USA
Phone: 401.461.1200 Fax: 401.941.5310
Email: info@leonardvalve.com
Web Site: http://www.leonardvalve.com

© 2018 Leonard Valve Company
Printed in USA

WM-1, Water Meter

Badger Meter

Recordall® Disc Meters

Lead-Free Bronze Alloy Models 120 & 170, Sizes 1-1/2" (40 mm) & 2" (50 mm), NSF/ANSI Standards 61 and 372 Certified

DESCRIPTION

The Recordall Models 120 and 170 Disc Series meters meet or exceed the most recent revision of AWWA Standard C700 and are available in a lead-free bronze alloy. Both meters comply with the lead-free provisions of the Safe Drinking Water Act, are certified to NSF/ANSI Standards 61 and 372 (Trade Designations: M120-LL and M170LL) and carry the NSF-61 mark on the housing. All components of the lead-free bronze alloy meter (housing, measuring element, seals, and so on) comprise the certified system.

Applications: For use in measurement of potable cold water in residential, commercial and industrial services where flow is in one direction only.

Operation: Water flows through the meter's strainer and into the measuring chamber where it causes the disc to nutate. The disc, which moves freely, nutates on its own ball, guided by a thrust roller. A drive magnet transmits the motion of the disc to a follower magnet located within the permanently sealed register. The follower magnet is connected to the register gear train. The gear train reduces the disc nutations into volume totalization units displayed on the register or encoder face.

Operating Performance: The Recordall Disc Series meters meet or exceed registration accuracy for the low flow rates (95%), normal operating flow rates (100 ± 1.5%), and maximum continuous operation flow rates as specifically stated in AWWA Standard C700.

Construction: Recordall Disc meter construction, which complies with ANSI/AWWA standard C700, consists of three basic components: meter housing, measuring chamber, and permanently sealed register or encoder. The water meter is available in a lead-free bronze alloy. A corrosion-resistant engineered polymer material is used for the measuring chamber.

Magnetic Drive: Direct magnetic drive, through the use of high-strength magnets, provides positive, reliable and dependable register coupling for straight-reading or AMR/AMI meter reading options.

Tamper-Proof Features: Unauthorized removal of the register or encoder is inhibited by the option of a tamper detection seal wire screw, TORX® tamper-resistant seal screw or the proprietary tamper-resistant keyed seal screw. Each can be installed at the meter site or at the factory.

Maintenance: Badger Meter Recordall Disc Series meters are designed and manufactured to provide long-term service with minimal maintenance. When maintenance is required, it can be performed easily either at the meter installation or at any other convenient location.

To simplify maintenance, the register, measuring chamber, and strainer can be replaced without removing the meter housing from the installation. No change gears are required for accuracy calibration. Interchangeability of parts among like-sized meters minimizes spare parts inventory investment. The built-in strainer has an effective straining area of twice the inlet size.

Connections: Companion flanges in cast iron or NL bronze are available as options. Straight connection sets are available in NL bronze.

M120

M170

SPECIFICATIONS

Meter Model	M120	M170
Typical Operating Range (100% ± 1.5%)	2.5…120 gpm (0.57…27 m^3/hr)	2.5…170 gpm (0.57…39 m^3/hr)
Low Flow (Min. 95%)	1.25 gpm (0.28 m^3/hr)	1.5 gpm (0.34 m^3/hr)
Maximum Continuous Operation	80 gpm (18 m^3/hr)	100 gpm (23 m^3/hr)
Pressure Loss at Maximum Continuous Operation	4.8 psi at 80 gpm (0.33 bar at 18 m^3/hr)	3.3 psi at 100 gpm (0.23 bar at 23 m^3/hr)
Maximum Operating Temperature	80° F (26° C)	80° F (26° C)
Maximum Operating Pressure	150 psi (10 bar)	150 psi (10 bar)
Measuring Element	Nutating disc, positive displacement	Nutating disc, positive displacement
Meter Connections	1-1/2" AWWA two-bolt elliptical flange, drilled or 1-1/2…11-1/2 NPT internal pipe threads	2" AWWA two-bolt elliptical flange, drilled or 2…11-1/2 NPT internal pipe threads
Test Plugs	Optional 1" NPT test plug (TP)	Optional 1" NPT test plug (TP)

Materials

Meter Housing	Lead-free bronze alloy
Housing Top Plates	Lead-free bronze alloy
Measuring Chamber	Engineered polymer
Disc	Engineered polymer
Trim	Stainless steel
Strainer	Engineered polymer
Disc Spindle	Stainless steel
Magnet	Ceramic
Magnet Spindle	Stainless steel
Register Lid and Shroud	Engineered polymer, bronze

WM-1, Water Meter

DIMENSIONS

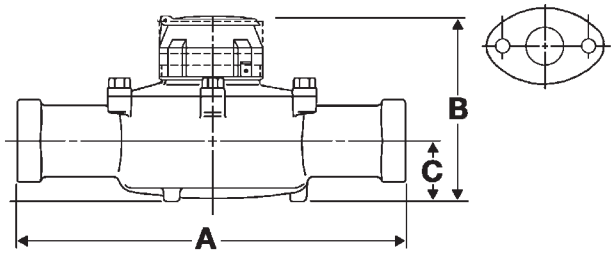

Meter Size	Meter Model	A Laying Length	B Height Reg./RTR	C Centerline Base	Width	Approx. Shipping Weight
1-1/2" (40 mm)	120 EL, Hex 120 EL, TP	12-5/8" (321 mm)	7" (178 mm)	2-3/8" (60 mm)	8-3/4" (222 mm)	19 lb (8.6 kg)
1-1/2" (40 mm)	120 ELL 120 ELL, TP	13" (330 mm)	7" (178 mm)	2-3/8" (60 mm)	8-3/4" (222 mm)	19 lb (8.6 kg)
2" (50 mm)	170 EL, Hex 170 EL, TP	15-1/4" (387 mm)	8" (203 mm)	2-7/8" (73 mm)	9-1/2" (241 mm)	30 lb (13.6 kg)
2" (50 mm)	170 ELL 170 ELL, TP	17" (432 mm)	8" (203 mm)	2-7/8" (73 mm)	9-1/2" (241 mm)	30 lb (13.6 kg)

EL = Elliptical ELL = Elliptical Long Hex = Hexagon, 1-1/2…11-1/2" NPT Thread TP=Test Plug 1"

REGISTERS / ENCODERS

Standard—Sweep-Hand Registration

The standard register is a straight-reading, permanently sealed magnetic drive register. Dirt, moisture, tampering and lens fogging problems are eliminated. The register has a six-odometer wheel totalization display, 360° test circle with center sweep hand, and flow finder to detect leaks. Register gearing is made of self-lubricating engineered polymer, which minimizes friction and provides long life. The multi-position register simplifies meter installation and reading. The register capacity is 10,000,000 gallons (1,000,000 ft^3, 100,000 m^3).

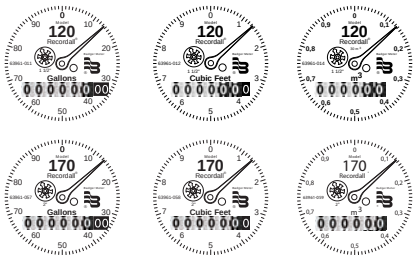

Meter Model	Gallon	Cubic Feet	Cubic Meter
120	100	10	1/0.1
170	100	10	1

Optional—Encoders for AMR/AMI Reading Solutions

AMR/AMI solutions are available for all Recordall Disc Series meters. All reading options can be removed from the meter without disrupting water service. Badger Meter encoders provide years of reliable, accurate readings for a variety of applications and are also available pre-wired to Badger Meter approved AMR/AMI solutions. See details at **www.badgermeter.com**.

PRESSURE LOSS CHARTS

1-1/2" Meter

Rate of Flow in Gallons per Minute

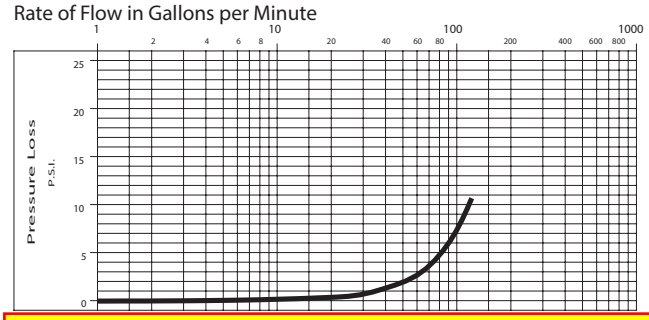

2" Meter

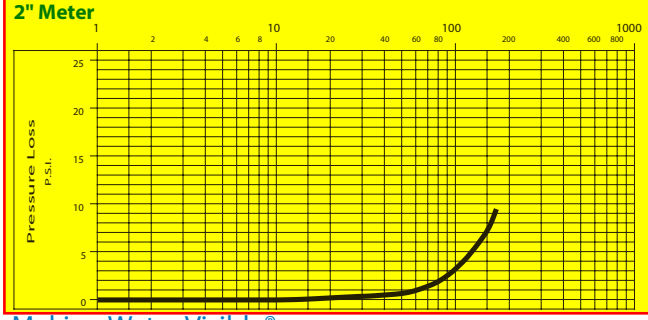

ACCURACY CHARTS

1-1/2" Meter

Rate of Flow in Gallons per Minute

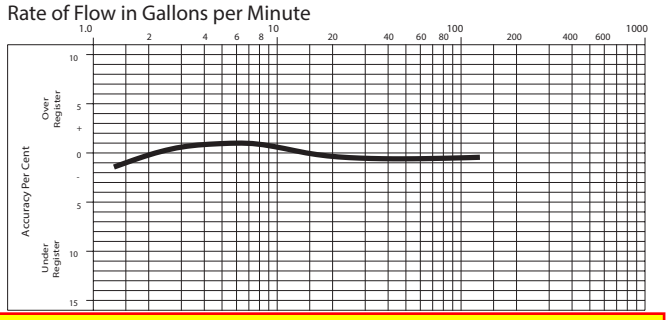

2" Meter

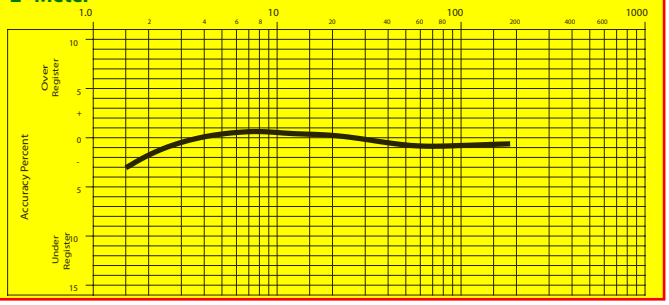

Making Water Visible®

MAKING WATER VISIBLE and RECORDALL are registered trademarks of Badger Meter, Inc. Other trademarks appearing in this document are the property of their respective entities. Due to continuous research, product improvements and enhancements, Badger Meter reserves the right to change product or system specifications without notice, except to the extent an outstanding contractual obligation exists. © 2015 Badger Meter, Inc. All rights reserved.

www.badgermeter.com

The Americas | Badger Meter | 4545 West Brown Deer Rd | PO Box 245036 | Milwaukee, WI 53224-9536 | 800-876-3837 | 414-355-0400
México | Badger Meter de las Americas, S.A. de C.V. | Pedro Luis Ogazón N°32 | Esq. Angelina N°24 | Colonia Guadalupe Inn | CP 01050 | México, DF | México | +52-55-5662-0882
Europe, Middle East and Africa | Badger Meter Europa GmbH | Nurtinger Str 76 | 72639 Neuffen | Germany | +49-7025-9208-0
Europe, Middle East Branch Office | Badger Meter Europe | PO Box 341442 | Dubai Silicon Oasis, Head Quarter Building, Wing C, Office #C209 | Dubai / UAE | +971-4-371 2503
Czech Republic | Badger Meter Czech Republic s.r.o. | Maříkova 2082/26 | 621 00 Brno, Czech Republic | +420-5-41420411
Slovakia | Badger Meter Slovakia s.r.o. | Racianska 109/B | 831 02 Bratislava, Slovakia | +421-2-44 63 83 01
Asia Pacific | Badger Meter | 80 Marine Parade Rd | 21-06 Parkway Parade | Singapore 449269 | +65-63464836
China | Badger Meter | 7-1202 | 99 Hangzhong Road | Minhang District | Shanghai | China 201101 | +86-21-5763 5412

Legacy Document Numbers: RDM-DS-00071-EN and RDM-DS-00072-EN

RPZ-1 - Domestic Water Backflow Preventer

ES-994

Job Name _____ Contractor _____

Job Location _____ Approval _____

Engineer _____ Contractor's P.O. No. _____

Approval _____ Representative _____

LEAD FREE*

Series 994

Reduced Pressure Zone Assemblies

Sizes: 2½" – 10"

Series 994 Reduced Pressure Zone Assemblies are designed to provide protection of the potable water supply in accordance with national codes. This series can be used where approved by the local authority having jurisdiction on health hazard cross-connections. Series 994 features a short lay length, lightweight stainless steel body, corrosion resistant stainless steel relief valve, and patented torsion spring check valves.

994OSY

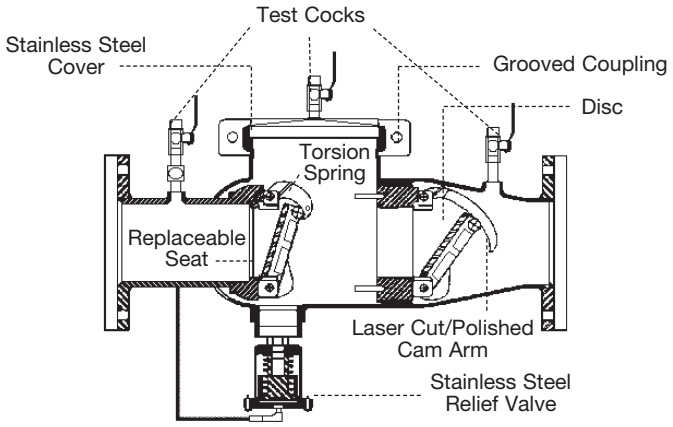

Features

- Stainless steel construction provides long term corrosion resistance and maximum strength
- Stainless steel body is half the weight of competitive designs reducing installation & shipping costs
- Short end-to-end dimensions makes retrofit easy
- Bottom mounted relief valve reduces clearance requirements when installed against an outside wall
- Torsion spring check valves provides maximum flow at low pressure drop
- Thermoplastic & stainless steel check valves for trouble-free operation
- No special tools required for servicing
- Compact construction allows for smaller enclosures
- Stainless steel relief valve features a balanced rolling diaphragm to eliminate sliding seals and lower maintenance costs

Specifications

A Reduced Pressure Zone Assembly shall be installed at each cross-connection to prevent backsiphonage and backpressure of hazardous materials into the potable water supply. The assembly shall consist of a pressure differential relief valve located in a zone between two positive seating check valves. The main valve body shall be manufactured from 300 Series stainless steel for corrosion resistance. The check valves shall be of thermoplastic construction with stainless steel hinge pins, cam arm, and cam bearing. The check valve shall utilize a single torsion spring design to minimize pressure drop through the assembly. The check valves shall be modular and shall seal to the main valve body by the use of an O-ring. There shall be no brass or bronze parts used within the check assembly or relief valve. The use of seat screws to retain the check valve seat is prohibited. All internal parts shall be accessible through a single cover on the valve assembly securely held in place by a two-bolt grooved coupling. The differential relief valve shall be of stainless steel construction and shall utilize a rolling diaphragm and no sliding seals. The relief valve shall be bottom mounted and supplied with a steel reinforced sensing hose. The assembly shall include two resilient seated shutoff valves & four ball type test cocks. The assembly shall be a Watts Series 994.

Models

Suffix:

NRS –	non-rising stem resilient seated gate valves
OSY –	UL/FM outside stem & yoke resilient seated gate valves
**OSY FxG –	flanged inlet gate connection and grooved outlet gate connection
**OSY GxF –	grooved inlet gate connection and flanged outlet gate connection
**OSY GxG –	grooved inlet gate connection and grooved outlet gate connection
LF –	without shutoff valves
S –	cast iron strainer

Available with grooved NRS gate valves - consult factory**
Post indicator plate and operating nut available - consult factory**
**Consult factory for dimensions

Note: The installation of a drain line is recommended. When installing a drain line, a 994AGK-P air gap is necessary. See ES-AG/EL/TC for additional information.

Now Available
WattsBox Insulated Enclosures.
For more information, send for literature ES-WB.

***IMPORTANT:** INQUIRE WITH GOVERNING AUTHORITIES FOR LOCAL INSTALLATION REQUIREMENTS*

***The wetted surface of this product contacted by consumable water contains less than one quarter of one percent (0.25%) of lead by weight.**

Watts product specifications in U.S. customary units and metric are approximate and are provided for reference only. For precise measurements, please contact Watts Technical Service. Watts reserves the right to change or modify product design, construction, specifications, or materials without prior notice and without incurring any obligation to make such changes and modifications on Watts products previously or subsequently sold.

WATTS®

Materials

All internal metal parts: 300 Series stainless steel
Main valve body: 300 Series stainless steel
Check assembly: Noryl®
Flange dimension in accordance with AWWA Class D

Pressure – Temperature

Temperature Range: 33°F – 110°F (0.5°C – 43°C) continuous
Maximum Working Pressure: 175psi (12.1 bar)

Standards

AWWA C511-92, CSA B64.5, UL Classified

Approvals

1013 B64.5 (OSY only) (2½" – 10", OSY only)

Approved by the Foundation for Cross Connection Control & Hydraulic Research at the University of Southern California Sizes 2½" – 6"

Capacity *Typical maximum flow rate (7.5 feet/sec.) **UL rated flow

Series 994 performance as established by an independent testing laboratory (1996 UL)

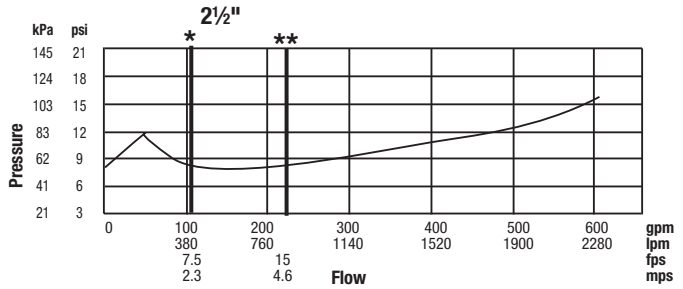

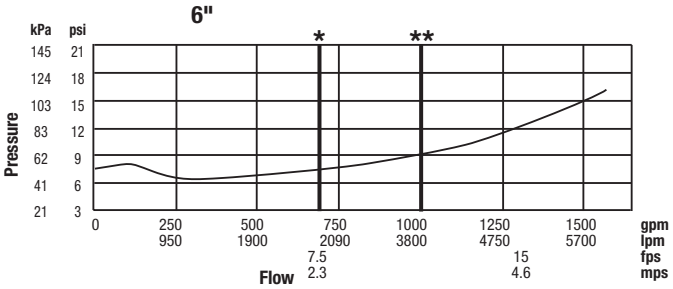

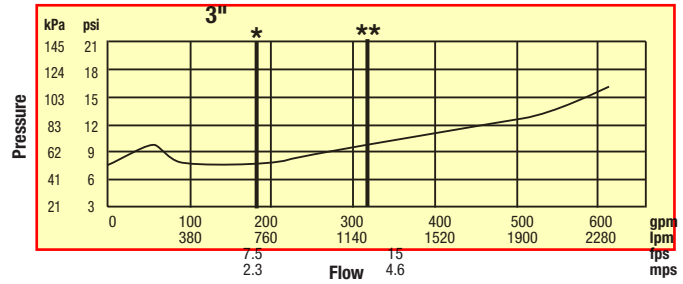

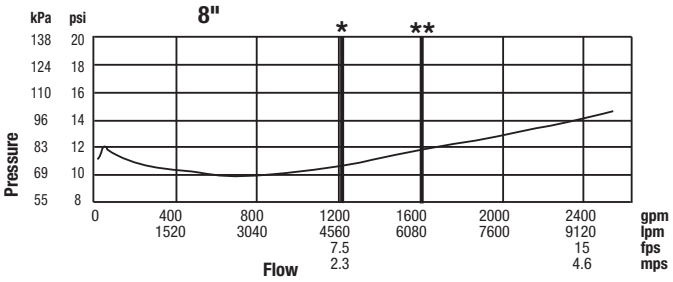

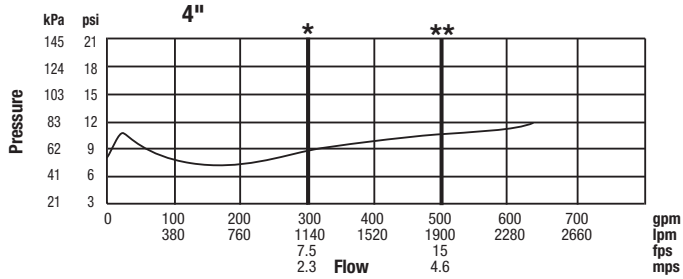

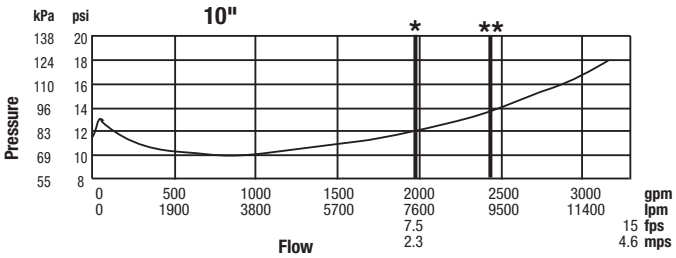

Dimensions — Weights

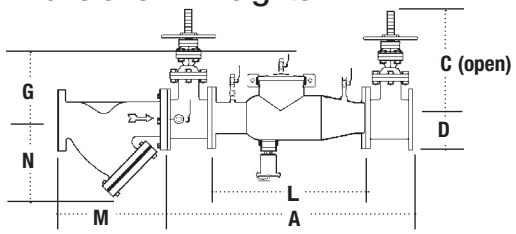

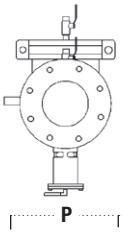

Air Gap Assembly

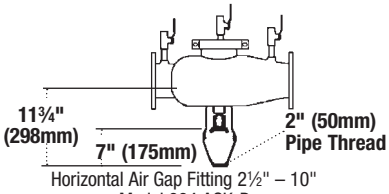

Horizontal Air Gap Fitting 2½" – 10"
Model 994 AGK-P

SIZE (DN)		DIMENSIONS																		WEIGHT			
		A		C (OSY)		C (NRS)		D		G		L		M		N		P		w/Gates		w/o Gates	
in.	mm	in.	mm	in.	mm	in.	mm	in.	mm	in.	mm	in.	mm	in.	mm	in.	mm	in.	mm	lbs.	kgs.	lbs.	kgs.
2½	65	37	940	16⅜	416	9⅜	238	10½	267	10	254	22	559	10	254	6½	165	7	178	148	67	60	27
3	80	38	965	18⅞	479	10¼	260	10½	267	10	254	22	559	10⅛	257	7	178	7½	191	226	103	62	28
4	100	40	1016	22¾	578	12 3/16	310	10½	267	10	250	22	559	12⅛	308	8¼	210	9	229	235	107	65	30
6	150	48½	1232	30⅛	765	16	406	11½	292	15	381	27½	699	18½	470	13½	343	11	279	380	172	110	50
8	200	52½	1334	37¾	959	19 15/16	506	12½	318	15	381	29½	749	21⅝	549	15½	394	13½	343	571	259	179	81
10	250	55½	1410	45¾	1162	23 13/16	605	12½	318	15	381	29½	749	26	660	18½	470	16	406	773	351	189	86

Noryl® is a registered trademark of SABIC Innovative Plastics™.

WATTS®

USA: T: (978) 689-6066 • F: (978) 975-8350 • Watts.com
Canada: T: (905) 332-4090 • F: (905) 332-7068 • Watts.ca
Latin America: T: (52) 81-1001-8600 • Watts.com

© 2019 Watts

SP-1 - Package Simplex Sump Pump

STANCOR
Oil-Minder® Simplex ~~& Duplex~~
Pump and Control Systems

Solid State, NEMA 4x
Oil-Minder® Control

SE50 Pump
with Float &
Oil-Minder®
Probe

The Stancor Oil-Minder® Control and Pump System allows water to be automatically pumped from elevator pits, transformer vaults, and industrial sumps without danger of ejecting potentially harmful oily substances into sewers, rivers and waterways. There is no need for a separate oil-water separator. The product is engineered for efficient and trouble free pumping, even under the most severe conditions. The Stancor Oil-Minder® System is the overwhelming choice among design engineers and compliance authorities worldwide, and has a proven record for protecting valuable equipment and the environment.

Features

- NEMA 4x weathertight corrosion resistant polycarbonate enclosures
- Stainless steel sensor probe with patented electronic technology that repels dirt contamination
- Single direct plug-in power source for operation of entire system
- Solid state components
- Alarms, lights, silence switch, and remote monitoring circuit for oil, high liquid, and high amperage conditions
- Solid state "push to test" switch conveniently performs all pump and control diagnostic tests
- Complete factory assembly and testing insures quality of entire pump and control system
- Patented - Pat. #4,715,785, #4,752,188, #6,203,281 and others pending
- Oil-Minder® System can be combined with a variety of different pumps and valves
- Choice of: 115v ~~or 220v (1 phase)~~ OR ~~230v/460v/575v (3 phase)~~
- LED indicator lights for oil spill, power, high liquid level, overload, and pump run
- UL 508 and 778 approved
- ENTELA tested and approved as a system

"There Is Only One Oil-Minder® System and Stancor Makes It"
Quality You Can Believe In

Description of Stancor Simplex Oil-Minder® Systems

The **Stancor Simplex Oil-Minder® System** is available in two primary configurations, as follows:

The **Multi-Option Oil-Minder® System** is designed for easy, fool-proof installation. All pump and control cables are factory wired into a wall mountable junction box. Between the junction box and the main Oil-Minder® control panel is a multi-pin quick connect cable. This single cord, 8-pin system allows the electrical cable between the junction box and control panel to be run through conduit and interconnected up to 250 feet long, using a single "push and turn" motion. There is no need for field wiring. Electrical installation costs are reduced by approximately 75% and all connections are secure and water-tight.

~~The **Junior Oil-Minder® System** is a good choice where the main control is located in the same area as the pump pit, or where the main control will be located remotely and conventional "hard wiring" is used between a junction box and the main control. Comparative features of each model are as follows:~~

Feature included in standard package	O/M Multi-Option	~~O/M Junior~~
~~SE-40 (.4 HP)~~ or SE-50 (.5 HP) 115V or ~~230V~~ single phase pump	x	~~x~~
Solid state NEMA 4x control panel	x	~~x~~
Separate LED indicator lights on NEMA 4x control for A) oil alert, B) high water, C) high motor amps, D) power to system, and E) pump activation	x	~~x~~
Self cleaning, hermetically sealed stainless steel oil detection probe (patented technology)	x	~~x~~
Float switches for pump activation and high water alert	x	~~x~~
Separate oil and water monitoring relays for alert conditions at remote locations	x	~~x~~
High decibel, water tight horn and silence switch for alert conditions	x	~~x~~
Direct plug-in activation of entire pump and control system from the main control panel (6' cord and molded plug included)	x	~~x~~
Factory hard wiring of pump, oil probe, and floats into NEMA 4x junction box	x	
Factory hard wiring of pump, oil probe, and floats directly into main NEMA 4x control panel		~~x~~
Junction box with female 8-pin cable receptacle and disconnect	x	
25' 8-pin Quick Connect cable (expandable to 250' with interconnecting extension cables)	x	
Female 8-pin cable receptacle installed in the NEMA 4x control panel	x	
"Push to Test" switch on panel for all pump and control diagnostic functions	x	~~x~~

SP-1 - Package Simplex Sump Pump

Stancor Simplex Oil-Minder® Controls

Oil-Minder® Multi-Option

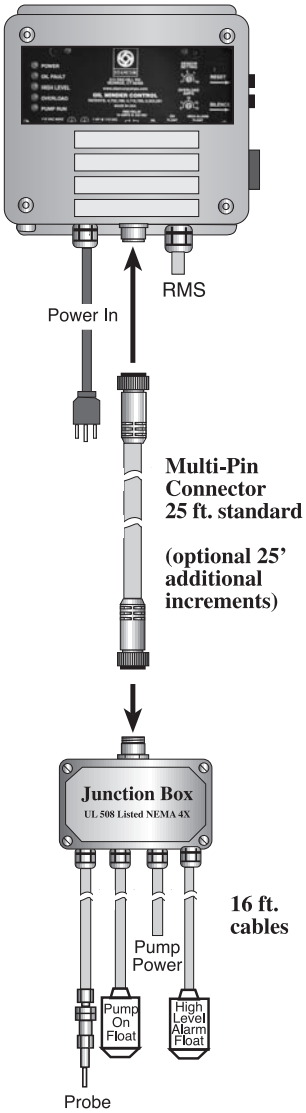

With Selected Pump

Oil-Minder® Junior

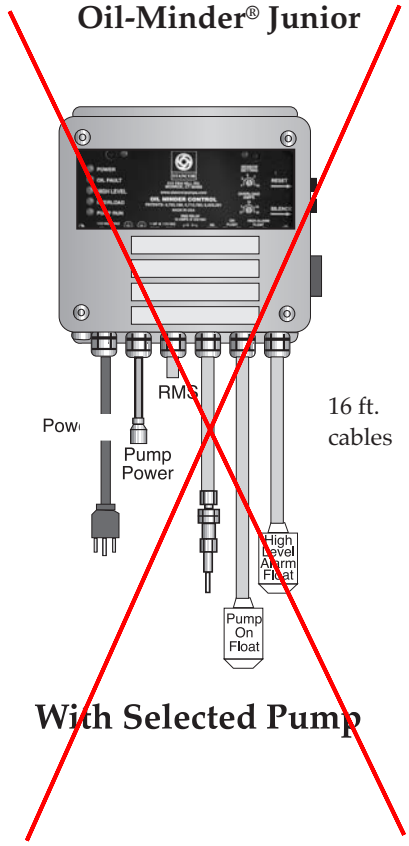

With Selected Pump

Standard Pump Selection Chart

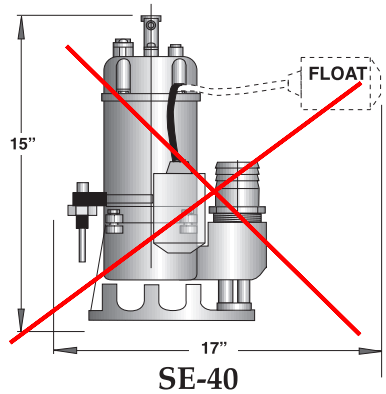

SE-40

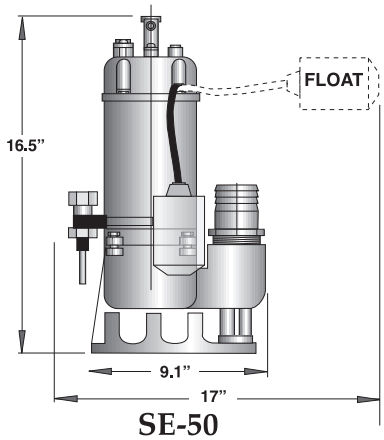

SE-50

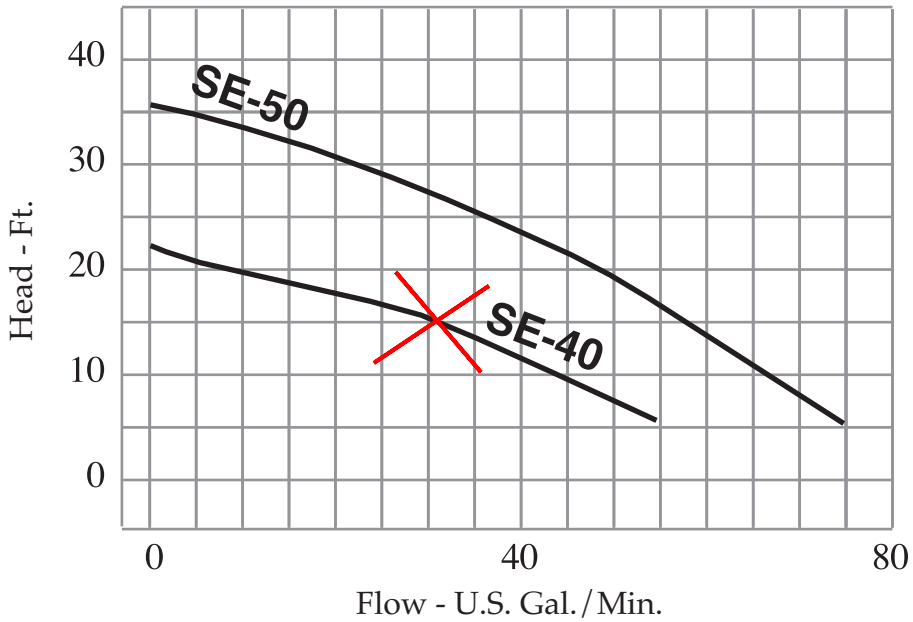

General & Electrical Specifications (Special voltages and pump models available upon request)

Model	H.P.	Voltage	RPM	Rated Full-Load Amps	Discharge Size	Max Head Ft.	Max Flow GPM
SE50	0.5	115/~~230~~ ~~460~~	3600	8/~~4~~	2″	37′	74
~~SE40~~	~~0.4~~	~~115~~	~~3600~~	~~5~~	~~2″~~	~~22′~~	~~64~~

STANCOR

SP-1 - Package Simplex Sump Pump

Additional Pump Selections

ASME A 17.1 Section 2.2.2.5 (2007) requires that, for each building elevator, the elevator sump pump shall be capable of pumping at least 3,000 gallons per hour. Therefore, after considering vertical lift and pipe friction losses, a larger pump selection may be necessary for certain projects.

No matter what the pump capacity requirement may be, Stancor has an Oil-Minder® System that will do the job.

Please refer to the chart below for additional commonly specified pump selections. Stancor manufactures pumps up to 75 HP, details of which can be found at www.stancorpumps.com.

Specifications		Output		Discharge	Rated		Cable
Pump & System Model	HP	Voltage	Amps	In.	Max. Head (ft)	Max. Capacity	Length (ft)
~~SE-40 O/M~~	~~4/10~~	~~115~~	~~5~~	~~2″~~	~~22~~	~~64 GPM~~	~~16~~
SE-50 O/M	1/2	115/~~220/460~~	8/~~4/2~~	2″	37	74 GPM	16
~~SE-100 O/M~~	~~1~~	~~115/220/460~~	~~14/7/3.5~~	~~2″~~	~~50~~	~~100 GPM~~	~~33~~
SE-100HH O/M	1	115/220/460	16/8/4.5	2″	80	80 GPM	33
SE-200 O/M	2	220/230/460	12/10/5.5	2″ (3″)	62	172 GPM	33
SV-300 O/M	3	230/460	9/5.2	3″ (4″)	70	210 GPM	33
SV-500 O/M	5	230/460	15/8.6	3″ (4″)	80	280 GPM	33
SV-750 O/M	7.5	230/460	22.5/12.8	3″ (4″)	90	330 GPM	33

1. Guiderail systems are available for all Stancor pumps
2. Elbow with female threaded connection provided, standard
3. 208V available as special order
4. Models up to 7 amps are available with 8-pin quick connect cable and standard on all "O/M Multi-Option" Systems

Series SE Performance Curves

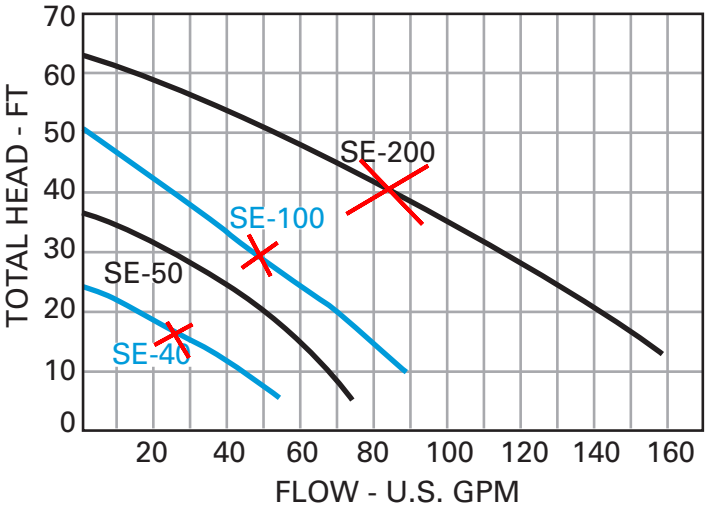

Series SV Performance Curves

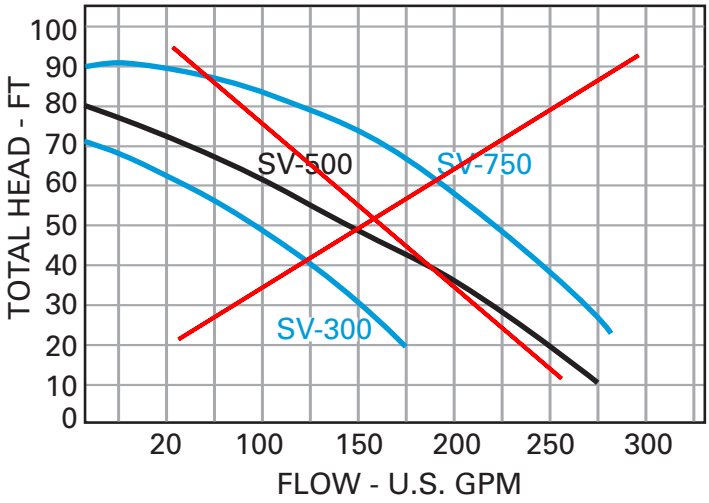

STANCOR

Stancor, Inc.
515 Fan Hill Road • Monroe, CT 06468
Phone 203-268-7513 • Fax 203-268-7958 • www.stancorpumps.com

SP-1 - Package Simplex Sump Pump

DIMENSION DRAWING

Standard Freestanding Type

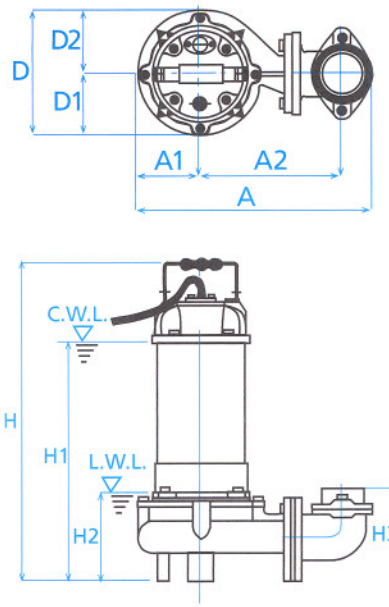

Optional Guiderail Type

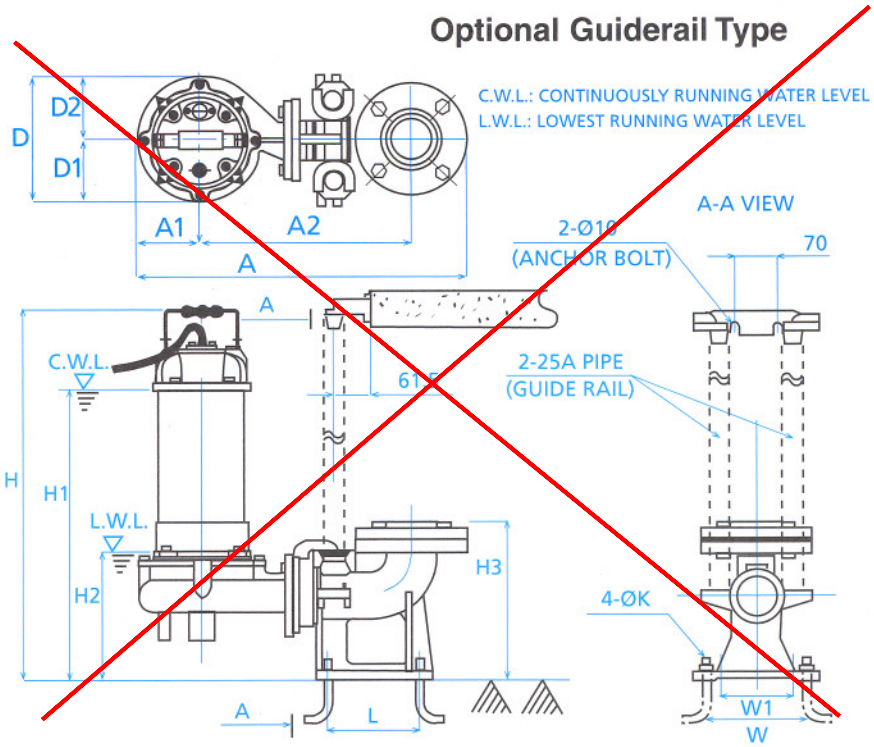

DIMENSION TABLE

G/R TYPE	PUMP TYPE	OUTPUT HP	DIMENSION (mm) A	A1	A2	D	D1	D2	H	H1	H2	H3	L	W	W1
N/A	Freestanding	0.5	223	70	115	132	63	69	395	338	125	156	-	-	-
N/A	Freestanding	1	223	70	115	132	63	69	425	368	125	156	-	-	-
N/A	Freestanding	2	390	103	235	210	105	105	530	400	150	155	-	-	-
N/A	Freestanding	3	390	103	235	210	105	105	550	420	150	155	-	-	-
N/A	Freestanding	5	525	125	295	250	117	133	635	520	200	275	-	-	-
N/A	Freestanding	7.5	525	125	295	250	117	133	675	560	200	275	-	-	-
G/R 200	Guiderail	1	475	80	300	165	77	78	490	390	190	267	150	180	100
G/R 200	Guiderail	2	550	103	350	210	105	105	600	470	216	360	150	180	100
G/R 200	Guiderail	3	550	103	350	210	105	105	620	490	216	360	150	180	100
G/R 750	Guiderail	5	690	125	460	250	117	133	730	585	265	360	230	250	250
G/R 750	Guiderail	7.5	690	125	460	250	117	133	770	625	265	360	230	250	250

Tungsten edge Cutter Impeller

High Efficiency Effluent Impeller

Vortex Non-Clog Impeller

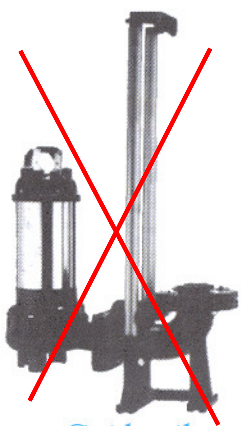

Guiderail Installation

STANCOR

Stancor, Inc. • 515 Fan Hill Road • Monroe, CT 06468
203-268-7513 • Fax 203-268-7958 • stancorpumps.com

ELKAY® SPECIFICATIONS

Elkay EZH2O Bottle Filling Station & Versatile Bi-Level ADA Cooler Filtered 8 GPH Light Gray

EWC-1 - Electric Water Cooler

Model LZSTL8WSLK

PRODUCT SPECIFICATIONS

Elkay ezH2O® Bottle Filling Station & Versatile Bi-Level ADA Cooler, Filtered 8 GPH Light Gray. Chilling Capacity of 8.0 GPH (gallons per hour) of 50° F drinking water, based on 80° F inlet water and 90° F ambient, per ASHRAE 18 testing. Features shall include Hands-Free, Visual Filter Monitor, Filtered, Green Ticker™, Laminar Flow, Antimicrobial, Real Drain. Furnished with Flexi-Guard® Safety bubbler. Electronic Bottle Filler Sensor With Electronic Front And Side Bubbler Pushbar activation. Product shall be Wall Mount (On-Wall), for Indoor applications, serving 2 station(s). Unit shall be certified to UL 399 and CAN/CSA C22.2 No. 120. Unit shall be lead-free design which is certified to NSF/ANSI 61 & 372 (lead free) and meets Federal and State low-lead requirements.

Special Features:	Hands-Free, Visual Filter Monitor, Filtered, Green Ticker™, Laminar Flow, Antimicrobial, Real Drain
Finish:	Light Gray Granite
Power:	115V/60Hz
Bubbler Style:	Flexi-Guard® Safety
Activation by:	Electronic Bottle Filler Sensor With Electronic Front And Side Bubbler Pushbar
Mounting Type:	Wall Mount (On-Wall)
Chilling Option*:	8.0 GPH
Full Load Amps	6
Rated Watts:	370
Dimensions (L x W x H):	36-3/4" x 19" x 39-1/16"
Approx. Shipping Weight:	104 lbs.
Installation Location:	Indoor
No. of Stations Served:	2
*Based on 80° F inlet water & 90° F ambient air temp for 50° F chilled drinking water.	

- Touchless, sensor-activation, designed for easy use.
- Visual Filter Monitor: LED Filter Status Indicator for when filter change is necessary.
- Filter is certified to NSF 42 and 53 for lead, particulate, chlorine, taste and odor reduction. 3,000 gal. capacity.
- Green Ticker: Informs user of number of 20 oz. plastic water bottles saved from waste.
- Laminar flow provides clean fill with minimal splash.
- Silver Ion Antimicrobial protection on key plastic components to inhibit the growth of mold and mildew.
- Real Drain System eliminates standing water.

COOLING SYSTEM

- Compressor: Hermetically-sealed, reciprocating type, single phase. Sealed-in lifetime lubrication.

PART:_____QTY: _____

PROJECT:_____

CONTACT:_____

DATE:_____

NOTES:_____

APPROVAL:_____

AMERICAN PRIDE. A LIFETIME TRADITION.
Like your family, the Elkay family has values and traditions that endure. For almost a century, Elkay has been a family-owned and operated company, providing thousands of jobs that support our families and communities.

Included with Product: Water Cooler (LZSTL8WSLC), Bottle Filler (LZWSR), Filter

▼ **Ships in multiple boxes.**

PRODUCT COMPLIANCE

ADA & ICC A117.1

Buy American Act

CAN/CSA C22.2 No. 120

GreenSpec®

NSF/ANSI 42, 53, 61, & 372 (lead free)

UL 399

Complies with ADA & ICC A117.1 accessibility requirements when installed according to the requirements outlined in these standards. Installation may require additional components and/or construction features to be fully compliant. Consult the local Authority Having Jurisdiction if necessary.

Installation Instructions (PDF)

5 Year Limited Warranty on the refrigeration system of the unit. Electrical components and water system are warranted for 12 months from date of installation. **Warranty pertains to drinking water applications only. Non-drinking water applications are not covered under warranty.**

Warranty (PDF)

OPTIONAL ACCESSORIES

51300C - WaterSentry Plus Replacement Filter (Bottle Fillers)
LKAPREZL - Accessory - Cane Apron for EZ
MLP200 - In Wall Carrier (Bi-Level)
98551C - WaterSentry® Mounting Cover (Gray Granite)

In keeping with our policy of continuing product improvement, Elkay reserves the right to change product specifications without notice. Please visit elkay.com for the most current version of Elkay product specification sheets. This specification describes an Elkay product with design, quality, and functional benefits to the user. When making a comparison of other producers' offerings, be certain these features are not overlooked.

EWC-1 - Electric Water Cooler

- Condenser: Fan cooled, copper tube with aluminum fins. Fan motor is permanently lubricated.
- Cooling Unit: Combination tube-tank type. Continuous copper tubing with is fully insulated with EPS foam that meets UL requirements for self-extinguishing material.
- Refrigerant Control: Refrigerant R-134a is controlled by accurately calibrated capillary tube.
- Temperature Control: Easily accessible enclosed adjustable thermostat is factory preset. Requires no adjustment other than for altitude requirements.

In keeping with our policy of continuing product improvement, Elkay reserves the right to change product specifications without notice. Please visit elkay.com for the most current version of Elkay product specification sheets. This specification describes an Elkay product with design, quality, and functional benefits to the user. When making a comparison of other producers' offerings, be certain these features are not overlooked.

EWC-1 - Electric Water Cooler

IMPORTANT!
INSTALLER PLEASE NOTE :

This water cooler has been designed and built to provide water to the user which has not been altered by materials in the cooler waterways. The grounding of electrical equipment such as telephone, computer, etc. to water lines is a common procedure. The grounding may be in the building but may also occur away from the building. This grounding can cause electrical feedback into a water cooler creating an electrolysis which creates a metallic taste or causes an increase in the metal content of the water. This condition is avoidable by installing the cooler using the proper materials as shown below.

NOTICE

This water cooler must be connected to the water supply using a dielectric coupling. The cooler is furnished with a non-metallic strainer which meets this requirement. The drain trap which is provided by the installer should also be plastic to completely isolate the cooler from the building plumbing system.
Bottle filler unit on bracket attached to wall by 6 holes (as shown). Water and electrical will connect through pre-punched hole in basin.
These products are designed to operate on 20 psi to 105 psi supply line pressure. Simultaneous operation of both bubblers on a bi-level unit may not be possible depending on water supply pressure. If simultaneous operation is desired, please ensure a minimum of 65 psi supply.

OPERATION OF QUICK CONNECT FITTINGS

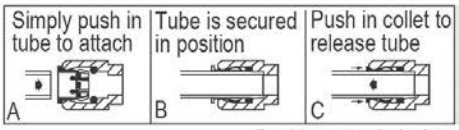

Pushing tube in before pulling it out helps to release tube

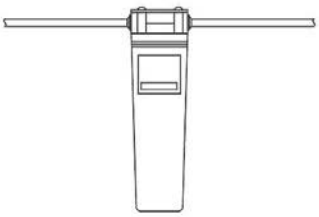

WaterSentry® Plus Filter System

ROUGH-IN FOR LEFT-HAND HIGH SIDE MODELS

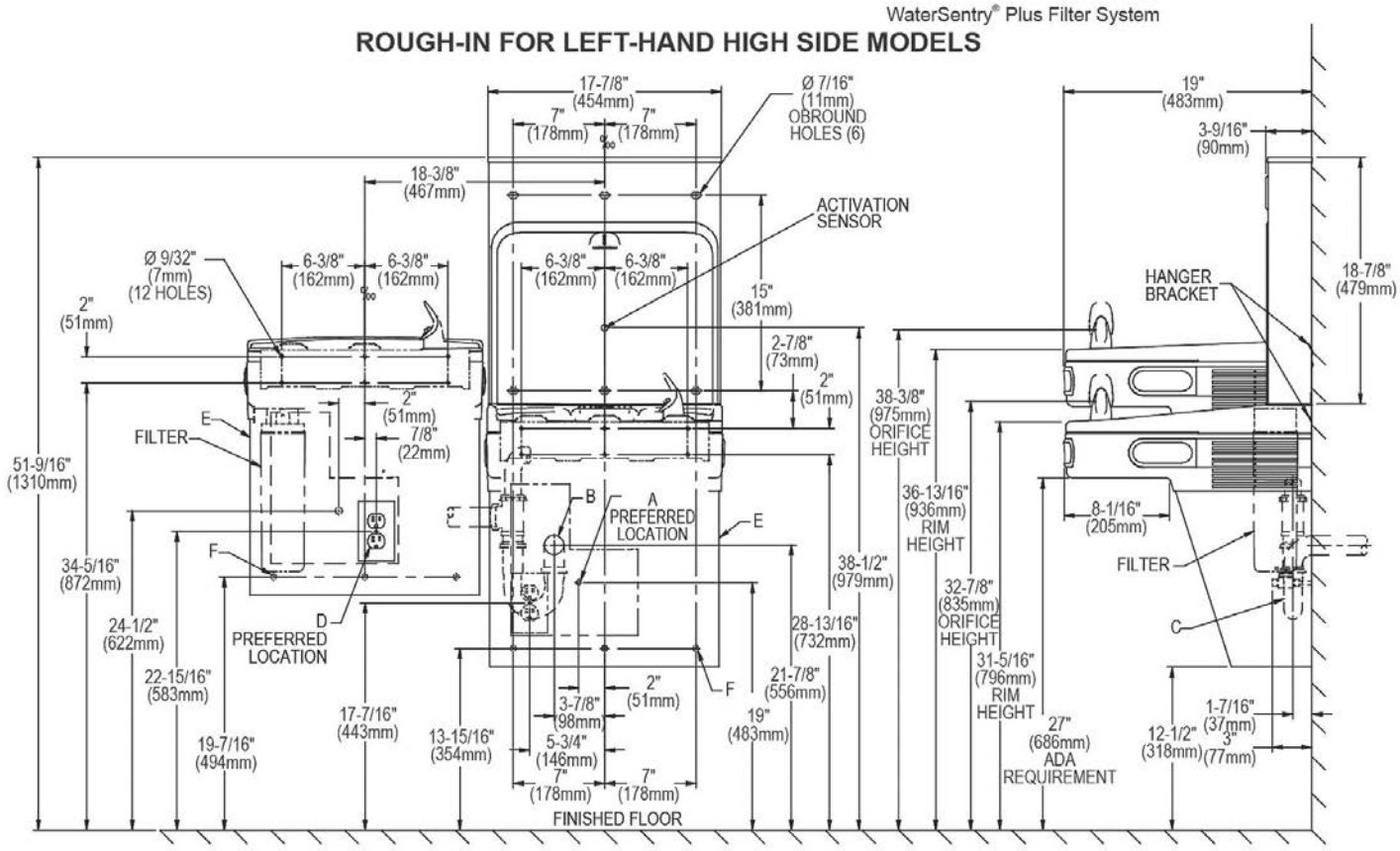

REDUCE HEIGHT BY 3 INCHES FOR INSTALLATION OF CHILDRENS ADA COOLER

LEGEND:
A = Recommended Water Supply location. Shut-off Valve (not furnished) to accept 3/8" O.D. unplated copper tube. Up to 3" (76mm) maximum out from wall.
B = Recommended Waste Outlet location. To accommodate 1-1/2" nominal drain. Drain stub 2" (51mm) out from wall.
C = 1-1/2" Trap (not furnished).
D = Electrical Supply (3) Wire Recessed Box Duplex Outlet.
E = Insure proper ventilation by maintaining 6" (152mm) minimum clearance from cabinet louvers to wall.
F = 7/16" (11mm) Bolt Holes for fastening to wall.
Note : New Installations Must Use Ground Fault Circuit Interrupter (GFCI). It is highly recommended that the circuit be dedicated and the load protection be sized for 20 amps.

In keeping with our policy of continuing product improvement, Elkay reserves the right to change product specifications without notice. Please visit elkay.com for the most current version of Elkay product specification sheets. This specification describes an Elkay product with design, quality, and functional benefits to the user. When making a comparison of other producers' offerings, be certain these features are not overlooked.

EWC-1 - Electric Water Cooler

IMPORTANT!
INSTALLER PLEASE NOTE :

This water cooler has been designed and built to provide water to the user which has not been altered by materials in the cooler waterways. The grounding of electrical equipment such as telephone, computer, etc. to water lines is a common procedure. The grounding may be in the building but may also occur away from the building. This grounding can cause electrical feedback into a water cooler creating an electrolysis which creates a metallic taste or causes an increase in the metal content of the water. This condition is avoidable by installing the cooler using the proper materials as shown below.

NOTICE

This water cooler must be connected to the water supply using a dielectric coupling. The cooler is furnished with a non-metallic strainer which meets this requirement. The drain trap which is provided by the installer should also be plastic to completely isolate the cooler from the building plumbing system.
Bottle filler unit on bracket attached to wall by 6 holes (as shown). Water and electrical will connect through pre-punched hole in basin.
These products are designed to operate on 20 psi to 105 psi supply line pressure. Simultaneous operation of both bubblers on a bi-level unit may not be possible depending on water supply pressure. If simultaneous operation is desired, please ensure a minimum of 65 psi supply.

OPERATION OF QUICK CONNECT FITTINGS

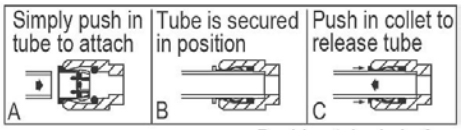

Pushing tube in before pulling it out helps to release tube

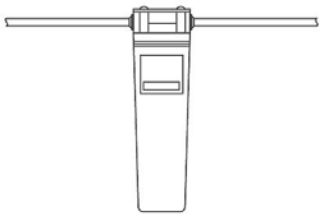

WaterSentry® Plus Filter System

ROUGH-IN FOR RIGHT-HAND HIGH SIDE MODELS

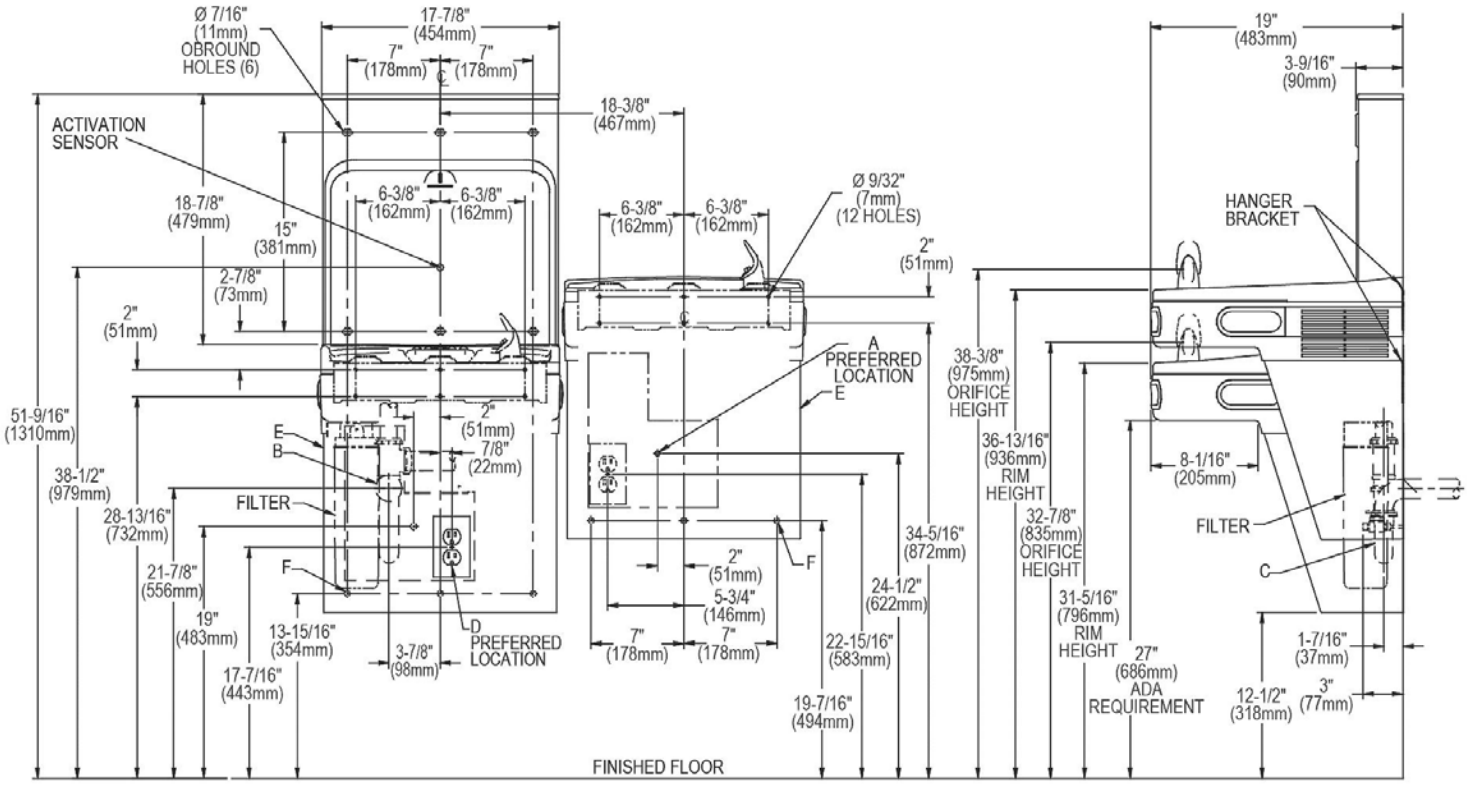

REDUCE HEIGHT BY 3 INCHES FOR INSTALLATION OF CHILDRENS ADA COOLER

LEGEND:
A = Recommended Water Supply location. Shut-off Valve (not furnished) to accept 3/8" O.D. unplated copper tube. Up to 3" (76mm) maximum out from wall.
B = Recommended Waste Outlet location. To accommodate 1-1/2" nominal drain. Drain stub 2" (51mm) out from wall.
C = 1-1/2" Trap (not furnished).
D = Electrical Supply (3) Wire Recessed Box Duplex Outlet.
E = Insure proper ventilation by maintaining 6" (152mm) minimum clearance from cabinet louvers to wall.
F = 7/16" (11mm) Bolt Holes for fastening to wall.
Note : New Installations Must Use Ground Fault Circuit Interrupter (GFCI). It is highly recommended that the circuit be dedicated and the load protection be sized for 20 amps.

In keeping with our policy of continuing product improvement, Elkay reserves the right to change product specifications without notice. Please visit elkay.com for the most current version of Elkay product specification sheets. This specification describes an Elkay product with design, quality, and functional benefits to the user. When making a comparison of other producers' offerings, be certain these features are not overlooked.

FCO-1 - Floor Cleanout

For Commercial Applications

Job Name _____ Contractor _____

Job Location _____ Approval _____

Engineer _____ Contractor's P.O. No. _____

Approval _____ Representative _____

Tag _____

CO-200-R

Floor Cleanout With Round Top

Specification

Watts CO-200-R epoxy coated cast iron floor cleanout with 5"(127) round adjustable gasketed nickel bronze top, removable gas tight gasketed brass cleanout plug, and no hub (standard) outlet.

Pipe Sizing (Select One)		
Size	Description	
2	2"(51) Pipe Size	☐
3	3"(76) Pipe Size	☐
4	4"(102) Pipe Sized	☐

Outlet Type (Select One)		
Size	Description	
NH	No Hub (MJ)	☐
P	Push-On	☐
X	Inside Caulk	☐

Options (Select One or More)		
Size	Description	
-C	Membrane Clamp	☐
-6	Vandal Proof	☐
-13	Galvanized Body	☐
-CF	Carpet Clamping Flange	☐
-US	Buy American Compliant	☐

Optional Body Material		
Size	Description	
-60	PVC Body w/Poly Plug	☐
-61	ABS Body w/Poly Plug	☐

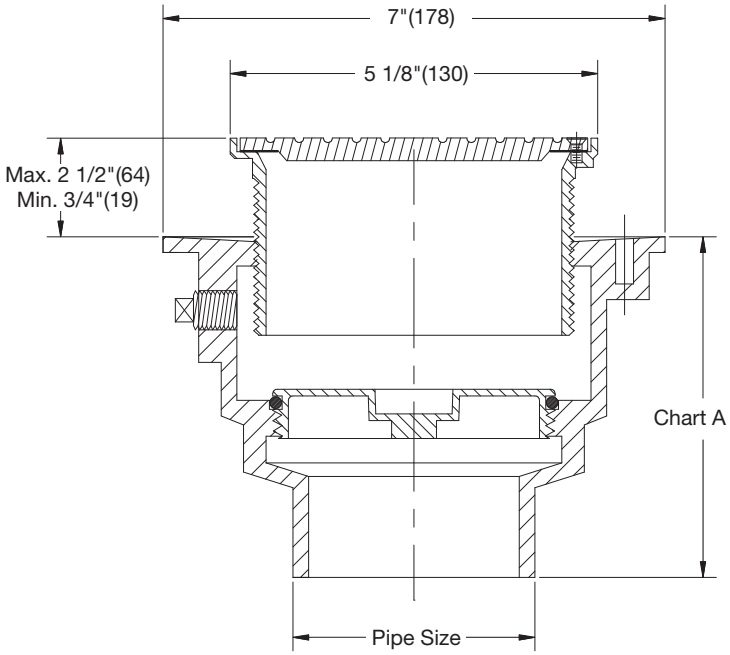

Chart A			
Pipe Size	NH	Push-On	PVC/ABS
2"	4-3/4"	5-1/2"	4"
3"	4-3/4"	5-1/2"	4"
4"	4-3/4"	5-1/2"	4"

Load Rating
MD

NOTICE

The load classifications are in accordance with the American National Standards ASME A112.21.1M
ASME Ratings are as follows:
MD - Safe Live Load 2000-4999 lbs. (900-2250 kg.)
The above categories are given as a guide only.
Please consult factory.

Approvals

UPC ®

NOTICE

The information contained herein is not intended to replace the full product installation and safety information available or the experience of a trained product installer. You are required to thoroughly read all installation instructions and product safety information before beginning the installation of this product.

Watts product specifications in U.S. customary units and metric are approximate and are provided for reference only. For precise measurements, please contact Watts Technical Service. Watts reserves the right to change or modify product design, construction, specifications, or materials without prior notice and without incurring any obligation to make such changes and modifications on Watts products previously or subsequently sold.

WATTS®

USA: T: (800) 338-2581 • F: (828) 248-3929 • Watts.com
Canada: T: (905) 332-4090 • F: (905) 332-7068 • Watts.ca
Latin America: T: (52) 81-1001-8600 • Watts.com

© 2018 Watts

FD-1 - Floor drain

For Commercial Applications

Job Name _____ Contractor _____

Job Location _____ Approval _____

Engineer _____ Contractor's P.O. No. _____

Approval _____ Representative _____

Tag _____

FD-100-A

Floor Drain With Round Strainer

Specification

Watts FD-100-A epoxy coated cast iron floor drain with anchor flange, reversible clamping collar with primary and secondary weepholes, adjustable round heel proof nickel bronze strainer, and no hub (standard) outlet.

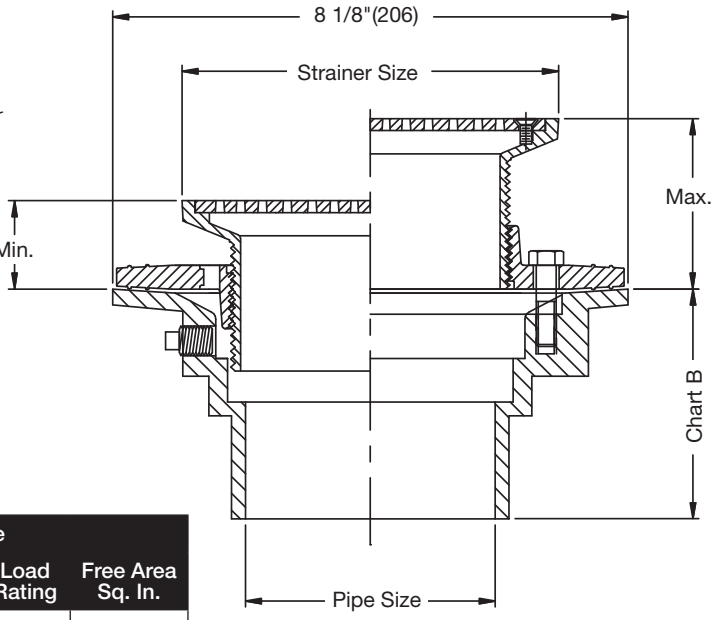

Pipe Sizing (Select One)		
Suffix	Description	
2	2"(51) Pipe Size	☐
3	3"(76) Pipe Size	☐
4	4"(102) Pipe Sizes	☐
6	6"(152) Pipe Size (No Hub Only)	☐

Outlet Type (Select One)		
Suffix	Description	
NH	No Hub (MJ)	☐
P	Push On	☐
T	Threaded Outlet	☐
X	Inside Caulk	☐

Strainer (Select One)		
Suffix	Description	
A5	5"(127) Dia., Nickel Bronze	☐
A6	6"(152) Dia., Nickel Bronze	☐
A7	7"(178) Dia., Nickel Bronze	☐
A8	8"(203) Dia., Nickel Bronze	☐
A10	10"(254) Dia., Nickel Bronze	☐

Options (Select One)		
Suffix	Description	
-5	Sediment Bucket	☐
-6	Vandal Proof	☐
-7	Trap Primer Tapping	☐
-8	Backwater Valve (2, 3, 4" Only)	☐
-13	Galvanized Body	☐
-15	Strainer Extension (DD-50)	☐
-F4-50	4" Round Cast Iron Funnel	☐
-F4-1	4" Round Nickel Bronze Funnel	☐
-F6-1	6" Round Nickel Bronze Funnel	☐
-G-50	4x9" Oval Cast Iron Funnel	☐
-G-1	4x9"Oval Nickel Bronze Funnel	☐
-SO	Side Outlet	☐

Strainer Size				
Str. Dia.	Min.	Max.	Load Rating	Free Area Sq. In.
5"(127)	13/16"(21)	3 1/4"(83)	*MD	8
6"(152)	7/8"(22)	3 3/8"(86)	*MD	9
7"(178)	11/16"(17)	3 1/4"(83)	*MD	12
8"(203)	7/8"(22)	3 1/4"(83)	*MD	18
10"(254)	1 1/4"(32)	3 1/4"(83)	*MD	28

Chart B					
Pipe Size	Std. No Hub	P Push On	T Female Thread	X Inside Caulk	60/61 PVC/ ABS
2"(52)	3 5/8"(92)	4 1/4"(108)	4 1/4"(108)	4 1/2"(114)	4"(102)
3"(76)	3 5/8"(92)	4 1/4"(108)	4 1/4"(108)	4 1/2"(114)	4"(102)
4"(102)	3 5/8"(92)	4 1/4"(108)	4 1/4"(108)	4 1/2"(114)	4"(102)
6"(152)	3 1/2"(89)				

Please refer to watts.com for BAA information on specific models.

Optional Body Material		
Suffix	Description	
-60	PVC Body w/Socket Outlet	☐
-61	ABS Body w/Socket Outlet	☐

NOTICE

The information contained herein is not intended to replace the full product installation and safety information available or the experience of a trained product installer. You are required to thoroughly read all installation instructions and product safety information before beginning the installation of this product.

Watts product specifications in U.S. customary units and metric are approximate and are provided for reference only. For precise measurements, please contact Watts Technical Service. Watts reserves the right to change or modify product design, construction, specifications, or materials without prior notice and without incurring any obligation to make such changes and modifications on Watts products previously or subsequently sold.

WATTS®

USA: T: (800) 338-2581 • F: (828) 248-3929 • Watts.com
Canada: T: (888) 208-8927 • F: (888) 479-2887 • Watts.ca
Latin America: T: (52) 55-4122-0138 • Watts.com

© 2020 Watts

FD-2 - Floor drain

For Commercial Applications

Job Name _____ Contractor _____

Job Location _____ Approval _____

Engineer _____ Contractor's P.O. No. _____

Approval _____ Representative _____

Tag _____

FD-100-B

Floor Drain with Round Heavy Duty Strainer

Specification

Watts FD-100-B epoxy coated cast iron floor drain with anchor flange, reversible clamping collar with primary & secondary weepholes, adjustable heavy duty round heel proof nickel bronze strainer, and no hub (standard) outlet.

Pipe Sizing (Select One)		
Suffix	Description	
2	2"(51) Pipe Size	☐
3	3"(76) Pipe Size	☐
4	4"(102) Pipe Size	☐
6	6"(152) Pipe Size (No Hub Only)	☐

Outlet Type (Select One)		
Suffix	Description	
NH	No Hub (MJ)	☐
P	Push On	☐
T	Threaded Outlet	☐
X	Inside Caulk	☐

Options (Select One)		
Suffix	Description	
-5	Sediment Bucket	☐
-6	Vandal Proof	☐
-7	Trap Primer Tapping	☐
-8	Backwater Valve (2", 3", 4" Only)	☐
-13	Galvanized Body	☐
-15	Strainer Extension (DD-50)	☐
-F4-50	4" Round Cast Iron Funnel	☐
-F4-1	4" Round Nickel Bronze Funnel	☐
-F6-1	6" Round Nickel Bronze Funnel	☐
-G-50	4x9" Oval Cast Iron Funnel	☐
-G-1	4x9" Oval Nickel Bronze Funnel	☐
-SO	Side Outlet	☐

Strainer (Select One)		
Suffix	Description	
B5	5"(127) Dia. Nickel Bronze	☐
B5-4	5"(127) Dia. Ductile Iron	☐
B6	6"(152) Dia. Nickel Bronze	☐
B8	8"(203) Dia. Nickel Bronze	☐
B10	10"(254) Dia. Nickel Bronze	☐

Optional Body Material (NH Only)		
Suffix	Description	
-60	PVC Body w/Socket Outlet	☐
-61	ABS Body w/Socket Outlet	☐

Free Area

Suffix	Free Area Sq. In.
AS	11

Please refer to watts.com for BAA information on specific models.

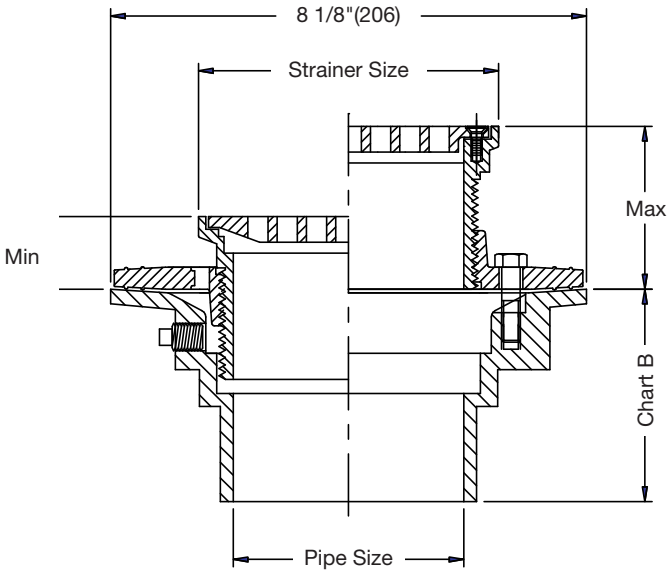

Strainer Size

Str. Dia.	Min.	Max.	Load Rating	Free Area Sq. In.
5"(127)	13/16"(21)	3-1/4"(83)	*HD	8
6"(152)	7/8"(22)	3-3/8"(86)	*HD	9
8"(203)	7/8"(22)	3 3/4"(86)	*HD	18
10"(254)	1 1/4"(32)	3-1/4"(83)	*HD	28

Chart B

Pipe Size	Std. No Hub	P Push On	T Female Thread	Inside Caulk	PVC/ ABS
2"(51)	3-5/8"(92)	4-1/4"(108)	4-1/4"(108)	4-1/2"(114)	4"(102)
3"(76)	3-5/8"(92)	4-1/4"(108)	4-1/4"(108)	4-1/2"(114)	4"(102)
4"(102)	3-5/8"(92)	4-1/4"(108)	4-1/4"(108)	4-1/2"(114)	4"(102)
6"(152)	3-1/2"(89)				

NOTICE

The information contained herein is not intended to replace the full product installation and safety information available or the experience of a trained product installer. You are required to thoroughly read all installation instructions and product safety information before beginning the installation of this product.

Watts product specifications in U.S. customary units and metric are approximate and are provided for reference only. For precise measurements, please contact Watts Technical Service. Watts reserves the right to change or modify product design, construction, specifications, or materials without prior notice and without incurring any obligation to make such changes and modifications on Watts products previously or subsequently sold.

USA: T: (800) 338-2581 • F: (828) 248-3929 • Watts.com
Canada: T: (888) 208-8927 • F: (888) 479-2887 • Watts.ca
Latin America: T: (52) 55-4122-0138 • Watts.com

© 2020 Watts

FS-1 - Floor Sink

Engineering Specification

Job Name _____ Contractor _____

Job Location _____ Approval _____

Engineer _____ Contractor's P.O. No. _____

Approval _____ Representative _____

Tag _____

FS-740

12" Square x 8" Deep Sanitary Floor Sink

Specification

Watts FS-740 12"(305) square x 8"(203) deep sanitary floor sink with white acid resistant porcelain enamel coated interior, loose set porcelain enamel coated cast iron grate, polypropylene dome bottom strainer, and no hub (standard) outlet.

Pipe Sizing		
Suffix	Description	
2	2"(51) Pipe Size	☐
3	3"(76) Pipe Size	☐
4	4"(102) Pipe Size	☐

Outlet Type		
Suffix	Description	
NH	No Hub (MJ)	☐
P	Push-On	☐

Options		
Suffix	Description	
-F	Flange with Weepholes	☐
-FC	Flange w/Weepholes & Flashing Clamp	☐
-1	Nickel Bronze Top	☐
-3	Stainless Steel Rim & Grate	☐
-5	Sediment Bucket	☐
-6	Vandal Proof (-1, -3 Only)	☐
-7	Trap Primer Tapping	☐
-9	Hinged Grate (-1 Only)	☐
-21	Secondary Strainer	☐
-33	Less Grate	☐
-128	Grate w/2 1/2"(64) Center Opening	☐
-150	1/2 Grate	☐
-175	3/4 Grate	☐
-F4-1	4" Round Nickel Bronze Funnel	☐
-F6-1	6" Round Nickel Bronze Funnel	☐
-G-1	4x9" Oval Nickel Bronze Funnel	☐

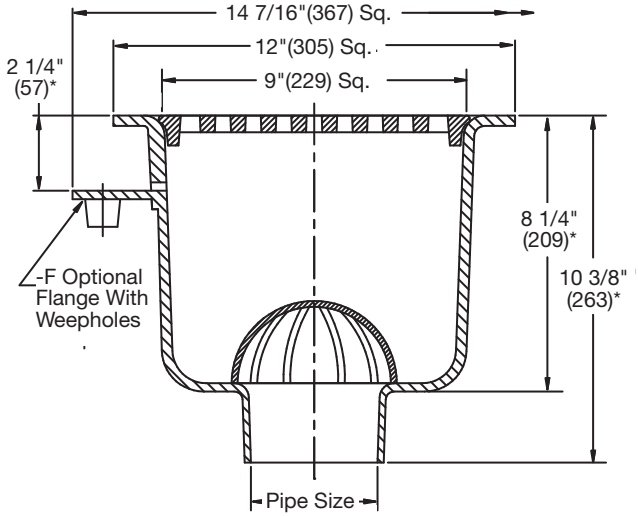

***Add 5/8"(16) for -1 Nickel Bronze Top or -3 Stainless Steel Top**

Please refer to watts.com for BAA information on specific models.

Free Area Sq. In.	
Standard Grate	With -1/-3 Rim & Grate
31	47

NOTICE

The information contained herein is not intended to replace the full product installation and safety information available or the experience of a trained product installer. You are required to thoroughly read all installation instructions and product safety information before beginning the installation of this product.

Watts product specifications in U.S. customary units and metric are approximate and are provided for reference only. For precise measurements, please contact Watts Technical Service. Watts reserves the right to change or modify product design, construction, specifications, or materials without prior notice and without incurring any obligation to make such changes and modifications on Watts products previously or subsequently sold.

USA: T: (800) 338-2581 • F: (828) 248-3929 • Watts.com
Canada: T: (888) 208-8927 • F: (905) 481-2316 • Watts.ca
Latin America: T: (52) 55-4122-0138 • Watts.com

© 2021 Watts

Z1341
Wall Faucet

HB-1 - Hose Bibb

SPECIFICATION SHEET

TAG _____

Dimensional Data (inches and [mm]) are Subject to Manufacturing Tolerances and Change Without Notice

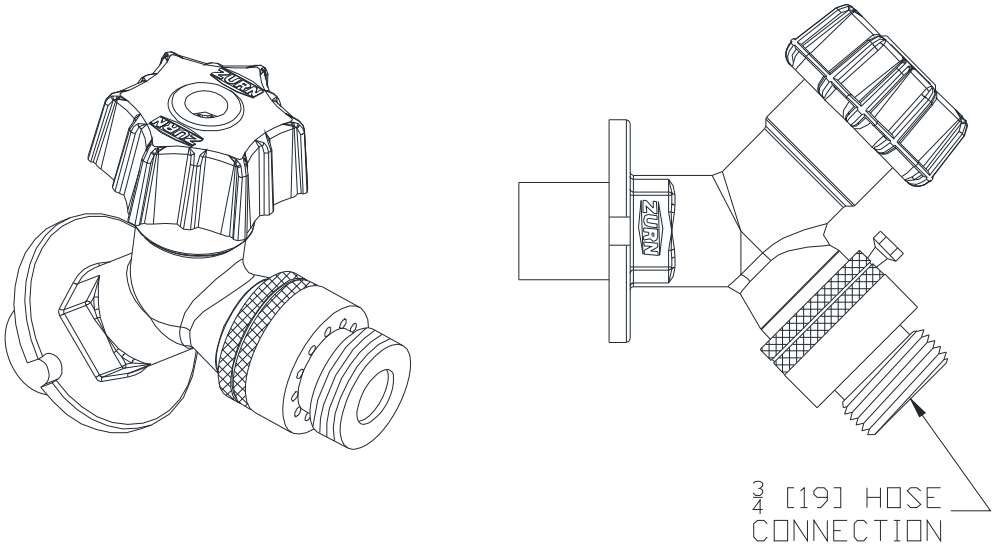

Inlet Connection	Inlet Description in Inches	Approx. Wt. Lbs. [kg]
___ -C12	1/2 [13] Solder x 3/4 [19] Solder	2 [1]
___ -C12-PX	1/2 [13] PEX	2 [1]
___ -CP12	1/2 [13] Solder x 1/2 [13] MPT	2 [1]
___ -P12	1/2 [13] FPT	2 [1]
___ -P34	3/4 [19] FPT	2 [1]

ENGINEERING SPECIFICATION: Z1341
Exposed, anti-siphon, wall faucet for use in moderate climate installation, complete with Z1399-VB external vacuum breaker, all bronze interior components, vandal-resistant operating stem, rough bronze exterior and 3/4 [19] male hose connection (Conform to ASME B1.20.7). Furnished with choice of five different inlet connections. Provided with optional loose key handle.

OPTIONS (Check/specify appropriate options)

SUFFIXES

- ____ -LF Less Flange (-C12 and -CP12 only)
- ____ -PB Polished Bronze Finish
- ____ -PC Polished Chrome Finish
- ____ -RC Rough Chrome Finish
- ____ -RK Hydrant Parts Repair Kit

1011
(Hose Connection Vacuum Breaker)

* Regularly furnished unless otherwise specified.

Zurn Industries, LLC | Specification Drainage Operation
1801 Pittsburgh Avenue, Erie, PA U.S.A. 16502 · Ph. 855-663-9876, Fax 814-454-7929
In Canada | **Zurn Industries Limited**
3544 Nashua Drive, Mississauga, Ontario L4V 1L2 · Ph. 905-405-8272, Fax 905-405-1292
www.zurn.com

Rev. F
Date: 10/22/13
C.N. No. 130143
Prod. | Dwg. No. Z1341

L-1 - Lavatory (Counter-Mount)

American Standard

Aqualyn® Countertop Sink
VITREOUS CHINA

BARRIER FREE

Aqualyn® Countertop Sink

- Made from vitreous china
- Self-rimming with cutout template supplied
- Front overflow
- Faucet ledge

❑ **0475.020** Faucet holes on 8" (203mm) centers (illustrated)

❑ **0475.920** Faucet holes on 8" (203mm) centers
- Less overflow

❑ **0476.028** Faucet holes on 4" (102mm) centers

❑ **0476.037** Faucet holes on 4" (102mm) centers
- Extra right-hand hole

❑ **0475.035** Faucet holes on 4" (102mm) centers
- Extra left-hand hole

❑ **0476.928** Faucet holes on 4" (102mm) centers
- Less overflow

❑ **0475.047** Center hole only

SEE REVERSE FOR ADDITIONAL ROUGHING-IN DIMENSIONS

Nominal Dimensions:
518 x 441mm
(20-3/8" x 17-3/8")

Bowl sizes:
406mm (16") wide
254mm (10") front to back
143mm (5-5/8") deep

Compliance Certifications - Meets or Exceeds the Following Specifications:
- ASME A112.19.2M for Vitreous China Fixtures

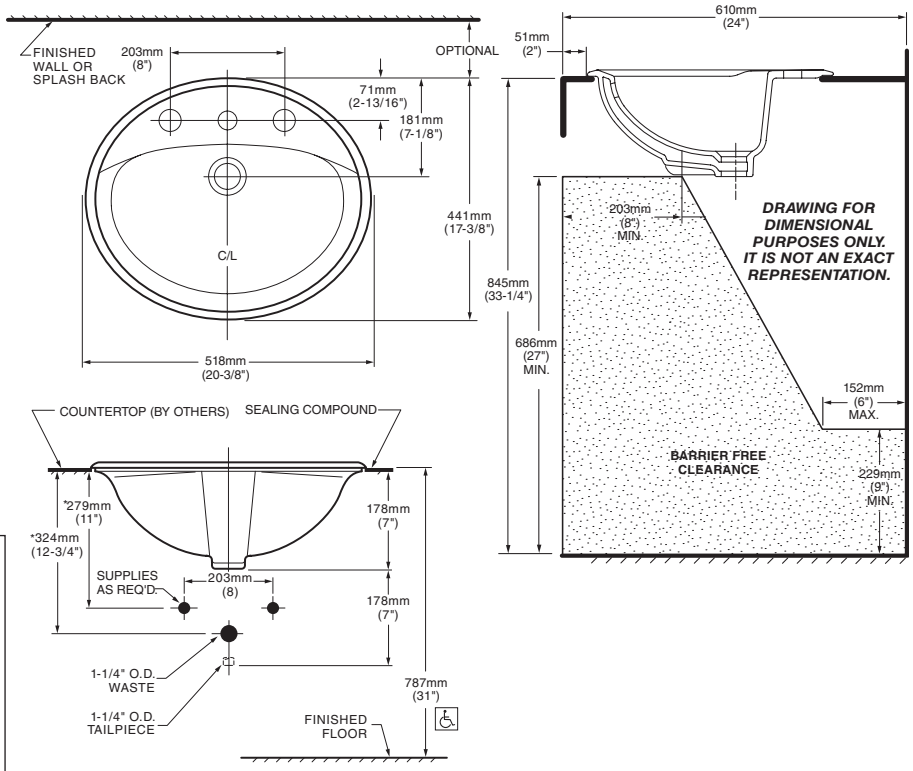

To Be Specified:
❑ Color: ❑ White ❑ Bone ❑ Linen
❑ Faucet*:
❑ Faucet Finish:
❑ Supplies:
❑ 1-1/4" Trap:

* See faucet section for additional models available

MEETS THE AMERICANS WITH DISABILITIES ACT GUIDELINES AND ANSI A117.1 ACCESSIBLE AND USABLE BUILDINGS AND FACILITIES - CHECK LOCAL CODES.
Install lavatory 864mm (34") from finished floor.
Lavatory installed 51mm (2") minimum from front edge of countertop provides 686mm (27") knee clearance area.

NOTES:
* DIMENSIONS SHOWN FOR LOCATION OF SUPPLIES AND "P" TRAP ARE SUGGESTED.
FOR COUNTERTOP CUTOUT AND INSTALLATION INSTRUCTIONS USE TEMPLATE SUPPLIED WITH SINK.
FITTINGS NOT INCLUDED WITH FIXTURE AND MUST BE ORDERED SEPARATELY.
SEALING COMPOUND SUPPLIED BY OTHERS.

IMPORTANT: Dimensions of fixtures are nominal and may vary within the range of tolerances established by ANSI Standard A112.19.2.
These measurements are subject to change or cancellation. No responsibility is assumed for use of superseded or voided pages.

© 2020 AS America Inc.

L-1 - Lavatory (Counter-Mount)

American Standard

Aqualyn® Countertop Sink

VITREOUS CHINA

BARRIER FREE

0476.028 Faucet holes on 4" (102mm) centers

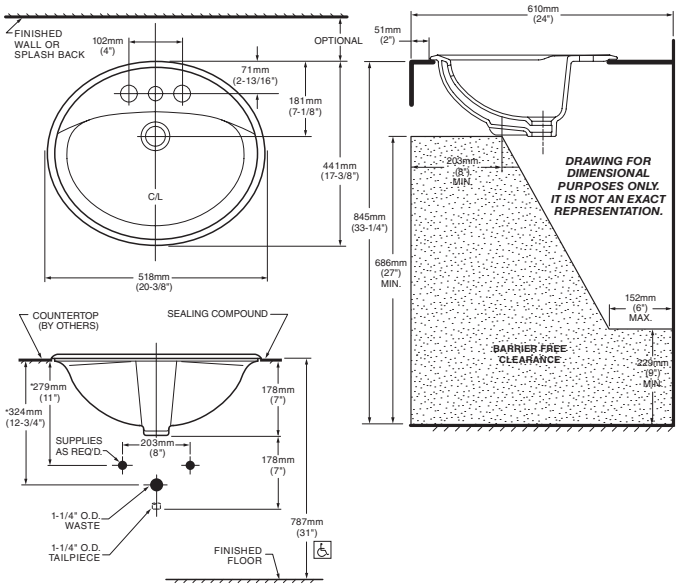

0476.037 Faucet holes on 4" (102mm) centers
• Extra right-hand hole

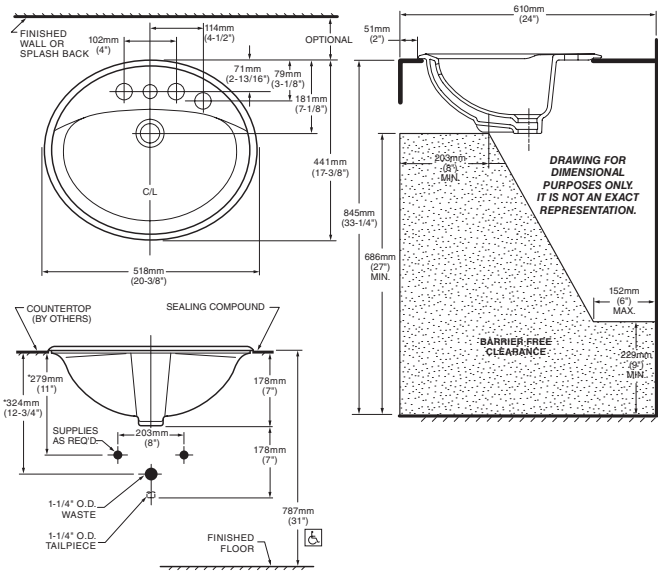

0475.035 Faucet holes on 4" (102mm) centers
• Extra left-hand hole

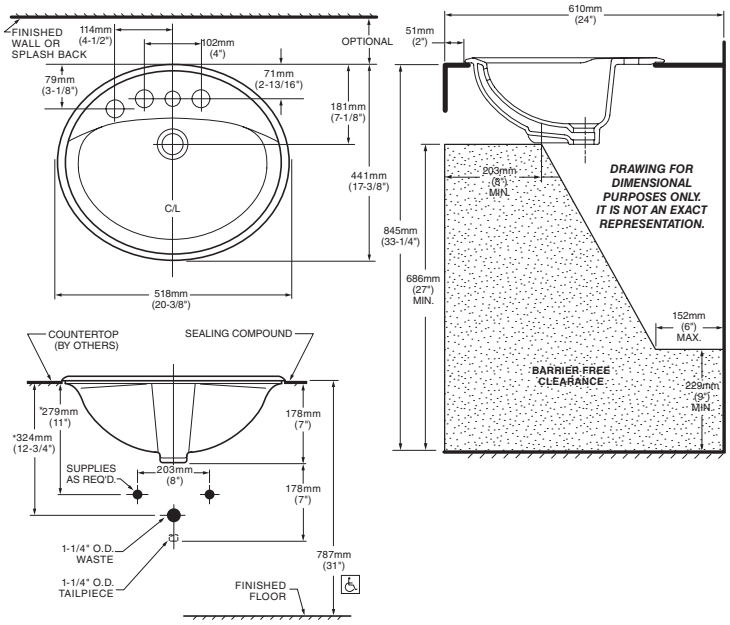

MEETS THE AMERICANS WITH DISABILITIES ACT GUIDELINES AND ANSI A117.1 ACCESSIBLE AND USABLE BUILDINGS AND FACILITIES - CHECK LOCAL CODES.
Install lavatory 864mm (34") from finished floor.
Lavatory installed 51mm (2") minimum from front edge of countertop provides 686mm (27") knee clearance area.

NOTES:
* DIMENSIONS SHOWN FOR LOCATION OF SUPPLIES AND "P" TRAP ARE SUGGESTED.
FOR COUNTERTOP CUTOUT AND INSTALLATION INSTRUCTIONS USE TEMPLATE SUPPLIED WITH SINK.
FITTINGS NOT INCLUDED WITH FIXTURE AND MUST BE ORDERED SEPARATELY.
SEALING COMPOUND SUPPLIED BY OTHERS.

IMPORTANT: Dimensions of fixtures are nominal and may vary within the range of tolerances established by ANSI Standard A112.19.2.
These measurements are subject to change or cancellation. No responsibility is assumed for use of superseded or voided pages.

© 2020 AS America Inc.

PART OF LIXIL
© 2020 AS America Inc.

Z6915-XL

L-1 - Lavatory Faucet

AquaSense Battery Powered Faucet

TAG _____

Architectural/Engineering Specification:

Zurn AquaSense® faucets are ideal for high-use applications where durability and hands-free operation are necessary. ADA compliant, battery powered, polished chrome-plated cast brass sensor faucet with infrared proximity sensor for retrofit and new construction. Unit is furnished with a standard 1.5 GPM aerator, and mounting hardware.

Zurn Lead Free products (-XL) is the line of durable, high quality brass faucets and fixtures that are designed and manufactured to comply with Section 1417 of the Safe Drinking Water Act (SDWA) which mandates the weighted average lead content of no more than 0.25% of the wetted surface.

Product Features:

- Infrared convergence-type proximity sensor
- 30 second time out feature
- Chrome-plated Cast Brass Body
- In-line filter
- 4 “AA” batteries
- Inlet for a 1/2” ball riser

Suffix Options:

- ☐ -10S Ten Second Time out Feature
- ☐ -DSA Drug Screening Applications
- ☐ -H4 Wrist Blade handle for ADM
- ☐ -MV Temperature Mixing Valve
- ☐ -SH Supply Hoses for Mixing Valve
- ☐ -TMV-1 Thermostatic Mixing Valve for Single Faucets

Aerator Options:

	Flowrate GPM [LpM]	Vandal Resistant	*WaterSense Labeled	Outlet Type
☐ **-ES**	1.5[5.7]	✓	✓	Spray
☐ **-FS**	0.5[1.9]	✓		Spray
☐ **-JS**	1.5[5.7]	✓	✓	Laminar
☐ **-K**	1.0[3.8]	✓	✓	Laminar
☐ **-LS**	1.0[3.8]	✓		Aerator
☐ **-MS**	0.35[1.3]	✓		Spray
☑ **-N**	0.5[1.9]	✓		Laminar

Power Supply Choices (Sold Separately):

- ☐ -ACA 6 VDC Plug-In Power Converter
- ☑ -HW6 Hardwired Power Converter

Optional Power Supply Accessories:

- ☑ -CWB Connector Wire for Plug-In Power Converter
- ☑ -MJ Mini Junction Box

NOTE: For Hardwire applications furnish P6000-HW6 power converter. Order P6000-HW6 power converter seperately.
The P6000-HW6 and P6000-MJ will power up to 8 sensor faucets.

Architectural/Engineering Approval

The information contained in this document is subject to change without notice.
Please contact Zurn for most up to date information.

Compliance and Certification:

- Low-Lead Compliant
- ADA Compliant

XL LEAD FREE ADA DESIGNED WaterSense Meets EPA Criteria

*This device is WaterSense labeled when used with the appropriate flow rate and certified for residential and private restrooms.

ZURN INDUSTRIES, LLC 511 W. Freshwater Way, Milwaukee, WI U.S.A. 53204 · Ph. 1-855-ONE-ZURN, Fax 919-775-3541
In Canada: **ZURN INDUSTRIES LIMITED** 7900 Goreway Drive, Unit 10, Brampton, Ontario L6T 5W6, Ph. 905-405-8272, Fax 905-405-1292

Rev. A Date: 11/14/19 C.N. No. SAN008590 Prod. | Dwg. No. SS Z6915-XL

Z6915-XL

L-1 - Lavatory Faucet

AquaSense Battery Powered Faucet

TAG _____

TYPICAL Z6915-XL

AquaSense Battery Powered Faucet

NOTE: Recommended through hole diameter to properly mount the spout/shank is 1-1/8" to 1-1/4".

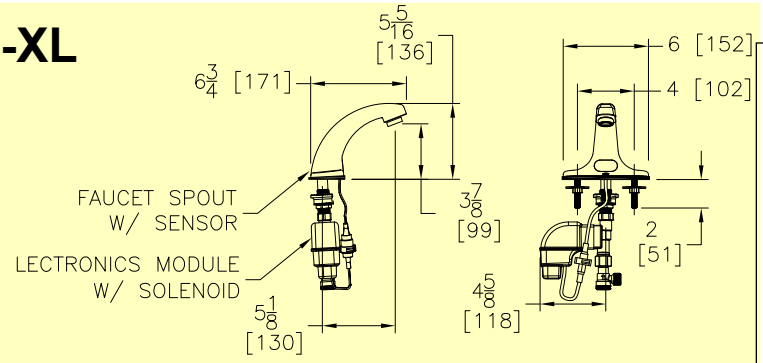

Optional Mixing Valves

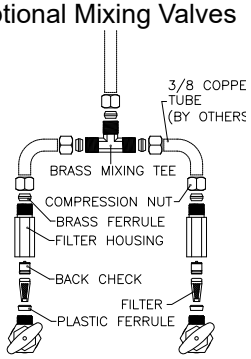

P6900-MT
Mixing Tee

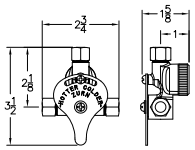

P6900-MV
Temperature Mixing Valve

TYPICAL Z6915-XL-ACA

AquaSense Plug-In Powered Faucet

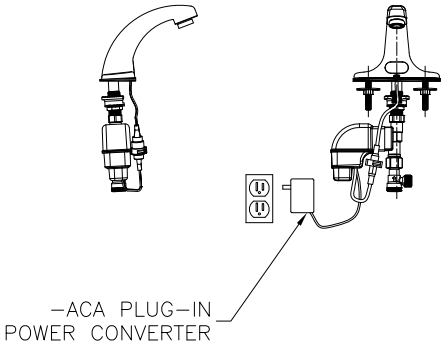

TYPICAL Z6915-XL-CWB

AquaSense Hardwire Powered Faucet

Optional:
* Optional -MJ mini junction box for connecting up to 8 faucets

NOTE: MUST USE EITHER ZURN P6000-HW6 HARDWIRE POWER CONVERTER OR ZURN P6000-ACA PLUG-IN POWER CONVERTER TO ENSURE PROPER OPERATION. USING A POWER CONVERTER OTHER THAN ZURN MAY RESULT IN OPERATION MALFUNCTION OR UNIT FAILURE.

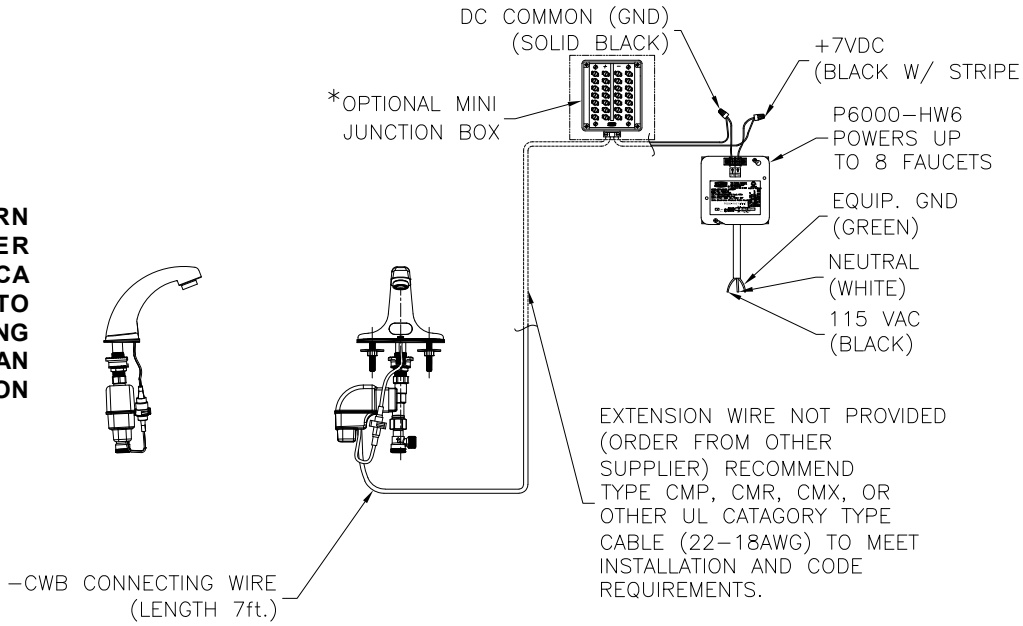

ZURN INDUSTRIES, LLC 511 W. Freshwater Way, Milwaukee, WI U.S.A. 53204 · Ph. 1-855-ONE-ZURN, Fax 919-775-3541
In Canada: **ZURN INDUSTRIES LIMITED** 7900 Goreway Drive, Unit 10, Brampton, Ontario L6T 5W6, Ph. 905-405-8272, Fax 905-405-1292

MS-1 - Mop Sink Basin

FIAT PRODUCTS

TERRAZZO MOP SERVICE BASIN 12" DEPTH WITH 6" DROP FRONT

12" MOP SERVICE BASIN WITH 6" DROP FRONT

- One piece, precast terrazzo made of black and white marble chips in gray portland cement to produce a compressive strength not less than 3000 P.S.I. seven days after casting.
- Terrazzo surface shall be ground and polished with all air holes or pits grouted and excess removed.
- Shoulders shall be not less than 12" high outside and 10" inside at lowest wall. Shoulder width not less than 2” on all sides with a 1/4" pitch towards the inside.
- Standard drain body is stainless steel cast integrally and provides for a caulked lead connection not less than 1" deep to a 3" pipe.
- Stainless steel strainer # 1453BB

Options

- QDC quick drain connectors
- Integral galvanized tiling flanges available at no additional charge.
- Stainless steel tiling flanges available with up-charge. Must be custom order.
- Chrome plated brass drain or Vandal proof drain. Must be custom order.

❏ **TSBC1610, TSBC1611, TSBC1612 Neo-corner Series** with stainless steel caps on thresholds only

❏ **TSB3000, TSB3001, TSB3002, TSB3003 Series** with stainless steel caps on all curbs

❏ **TSB3010, TSB3011, TSB3012, TSB3013 Series** with stainless steel caps on thresholds only

Optional Components:

❏ **830AA** Mop Service Basin Fitting

❏ **832AA** Hose & Hose Bracket

❏ **1239BB** Aluminum Bumperguard with Vinyl Insert

❏ **833AA** Silicone Sealant

❏ **MSG** Wall Guards - Stainless Steel
- Wall Guards are manufactured of heavy gauge stainless steel and help protect walls adjacent to Mop Basin. Two panels are required for corner installations. Optional third panel is required for a recessed installation. (MSG2424; MSG2828; MSG3232; MSG3624; MSG3636)

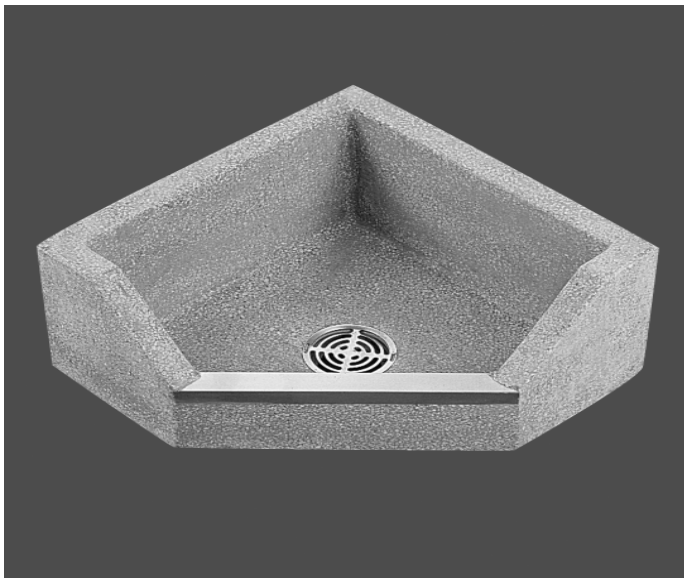

Shown: TSBC1610

SEE REVERSE FOR ROUGHING-IN DIMENSIONS

NOTES: Terrazzo Mop Basins **must** be installed on a 1/2" layer of mortar in order that the mop basin be level and to prevent cracking. Failure to install terrazzo without a mortar bed will void the warranty. Installations require a 1⁄4" clearance between mop basin and wall.

CERTIFICATIONS:

FIAT
QUALITY FOR LIFE

Customer Service Canada
1-800-387-0369
www.fiat.ca

Customer Service United States
1-800-442-1902
www.fiatproducts.com

© 2012 Fiat Products

Revised 8/12

MS-1 - Mop Sink Basin

FIAT PRODUCTS

TERRAZZO
MOP SERVICE BASIN
12" DEPTH WITH 6" DROP FRONT

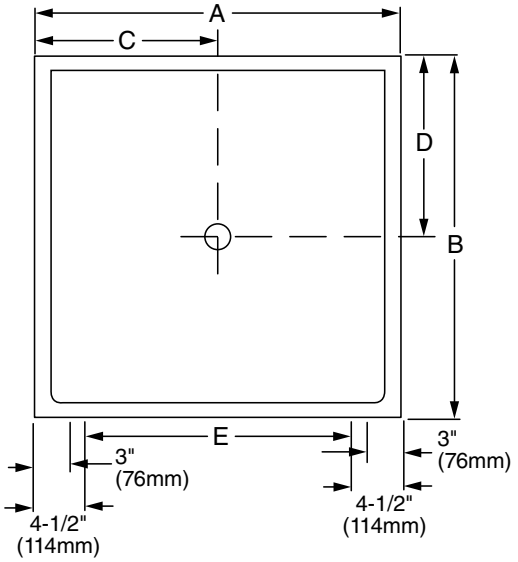

Series TSB3000
With Stainless Steel Caps On All Curbs

MODEL	SIZE	A	B	C	D	E
TSB3000	24" x 24" x 12"	24	24	12	12	15
TSB3001	32" x 32" x 12"	32	32	16	16	23
TSB3002	36" x 36" x 12"	36	36	18	18	27
TSB3003	36" x 24 x 12"	36	24	18	12	27

Series TSB3010
With Stainless Steel Threshold Only

MODEL	SIZE	A	B	C	D	E
TSB3010	24" x 24" x 12"	24	24	12	12	15
TSB3011	32" x 32" x 12"	32	32	16	16	23
TSB3012	36" x 36" x 12"	36	36	18	18	27
TSB3013	36" x 24 x 12"	36	24	18	12	27

Series TSBC1610
With Stainless Steel Caps Threshold Only

MODEL	SIZE	A	B	C	D	E	F
TSBC1610	24" x 24" x 12"	24	24	12	12	11	18-1/4
TSBC1611	32" x 32" x 12"	32	32	12	12	14	25-3/8
TSBC1612	36" x 36" x 12"	36	36	12	12	18	25-3/8

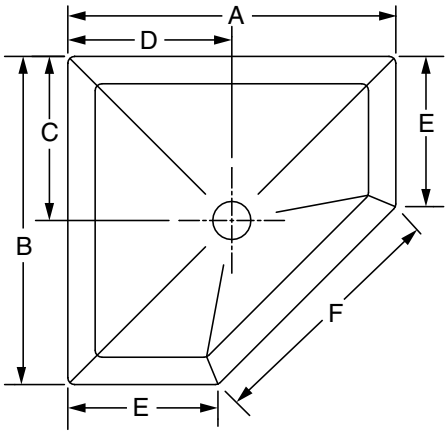

SERIES TSBC-1610
WITH STAINLESS STEEL CAPS
THRESHOLD ONLY

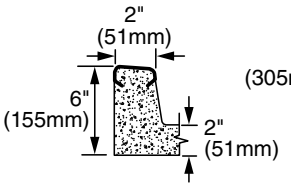

ST/ST CAP DETAIL
WITH 6" THRESHOLD

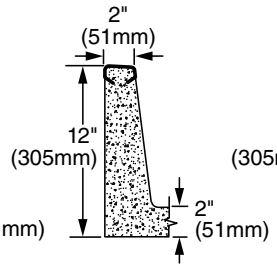

ST/ST CAP DETAIL

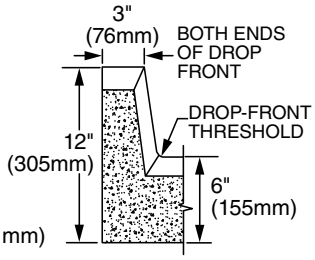

DROP FRONT
THRESHOLD DETAIL

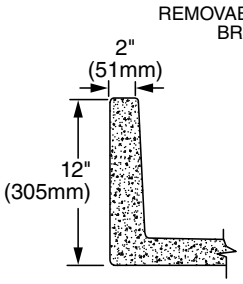

SECTION THRU
SIDES

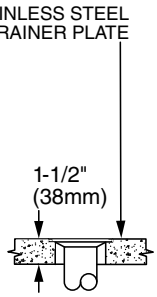

SECTION THRU
DRAIN
(LEAD CAULK &
3" PIPE "P" TRAP
BY OTHERS)

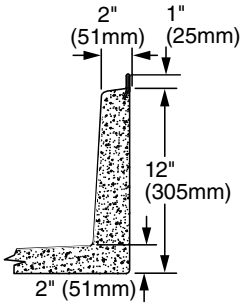

OPTIONAL GALV.
TILING FLANGE

MODELS TSB3010, TSB3011, TSB3012 AND TSB3013 SHALL BE SUPPLIED
WITH STAINLESS STEEL CAP ON DROPPED THRESHOLD CURB ONLY.

IMPORTANT: Roughing in dimensions may vary 1/2" and are subject to change or cancellation without prior notice.

FIAT
QUALITY FOR LIFE

Customer Service Canada
1-800-387-0369
www.fiat.ca

Customer Service United States
1-800-442-1902
www.fiatproducts.com

© 2012 Fiat Products

Revised 8/12

ELKAY®
SPECIFICATIONS

Elkay 8" Centerset Wall Mount Faucet 7" Bucket Hook Spt 4in Wristblade Handles 1/2 Offset Inlets+Stop Polished Chrome

Model(s) LK940BP07T4S

PRODUCT SPECIFICATIONS

Elkay 8" Centerset Wall Mount Faucet 7" Bucket Hook Spt 4in Wristblade Handles 1/2 Offset Inlets+Stop Polished Chrome. Faucet has a flow rate of 4.0 GPM, and is made of Chrome Plated Brass material, with a Quarter Turn Ceramic Disc valve. Faucet requires 2 faucet holes.

Mounting Type:	Wall Mount
Special Features:	Solid Brass Construction 1/2" adjustable inlets with integral stops
Finish:	Chrome (CR)
Handle Type:	4" Wristblade Handle
Deck Clearance:	2-1/8"
Spout Reach:	6-1/2"
Spout Height:	4-5/8"
Hole Drillings:	2
Material:	Chrome Plated Brass
Valve Type:	Quarter Turn Ceramic Disc
Valve Connection:	1/2" NPT Female
Flow Rate:	4.0 GPM
Faucet Hole Spread:	8
Spout Type:	Bucket Hook

Chrome
(CR)

MS-1 - Mop Sink Faucet

Included with Product: **Shut-off**

AMERICAN PRIDE. A LIFETIME TRADITION.
Like your family, the Elkay family has values and traditions that endure. For almost a century, Elkay has been a family-owned and operated company, providing thousands of jobs that support our families and communities.

Product Compliance: ADA & ICC A117.1
ASME A112.18.1/CSA B125.1
NSF 61
NSF 372 (lead free)

Complies with ADA & ICC A117.1 accessibility requirements when installed according to the requirements outlined in these standards.

Clean and Care Manual (PDF)
Installation Instructions (PDF)
Limited Warranty (PDF)

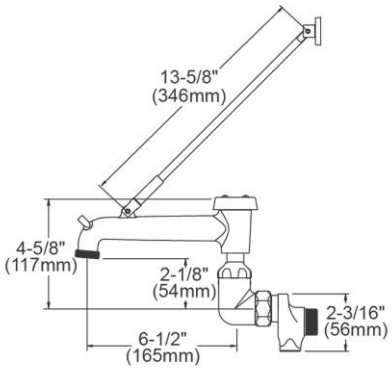

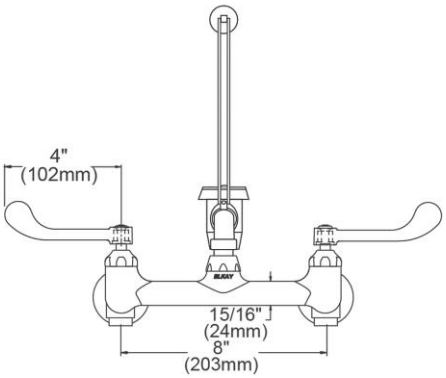

PART:_____QTY: _____

PROJECT:_____

CONTACT:_____

DATE:_____

NOTES:_____

APPROVAL:

In keeping with our policy of continuing product improvement, Elkay reserves the right to change product specifications without notice. Please visit elkay.com for the most current version of Elkay product specification sheets. This specification describes an Elkay product with design, quality, and functional benefits to the user. When making a comparison of other producers' offerings, be certain these features are not overlooked.

MS-1 - Mop Sink Faucet

ITEM	IND. PART	DESCRIPTION
1	A55406	Spout
2	45919C	Handle, 4"
3	45923C	Right Cold Cartridge
4	45924C	Left Hot Cartridge
5	A55413	2" Adjustable Inlet
6	45912C	Body
7	98555C	V.B. Repair Kit

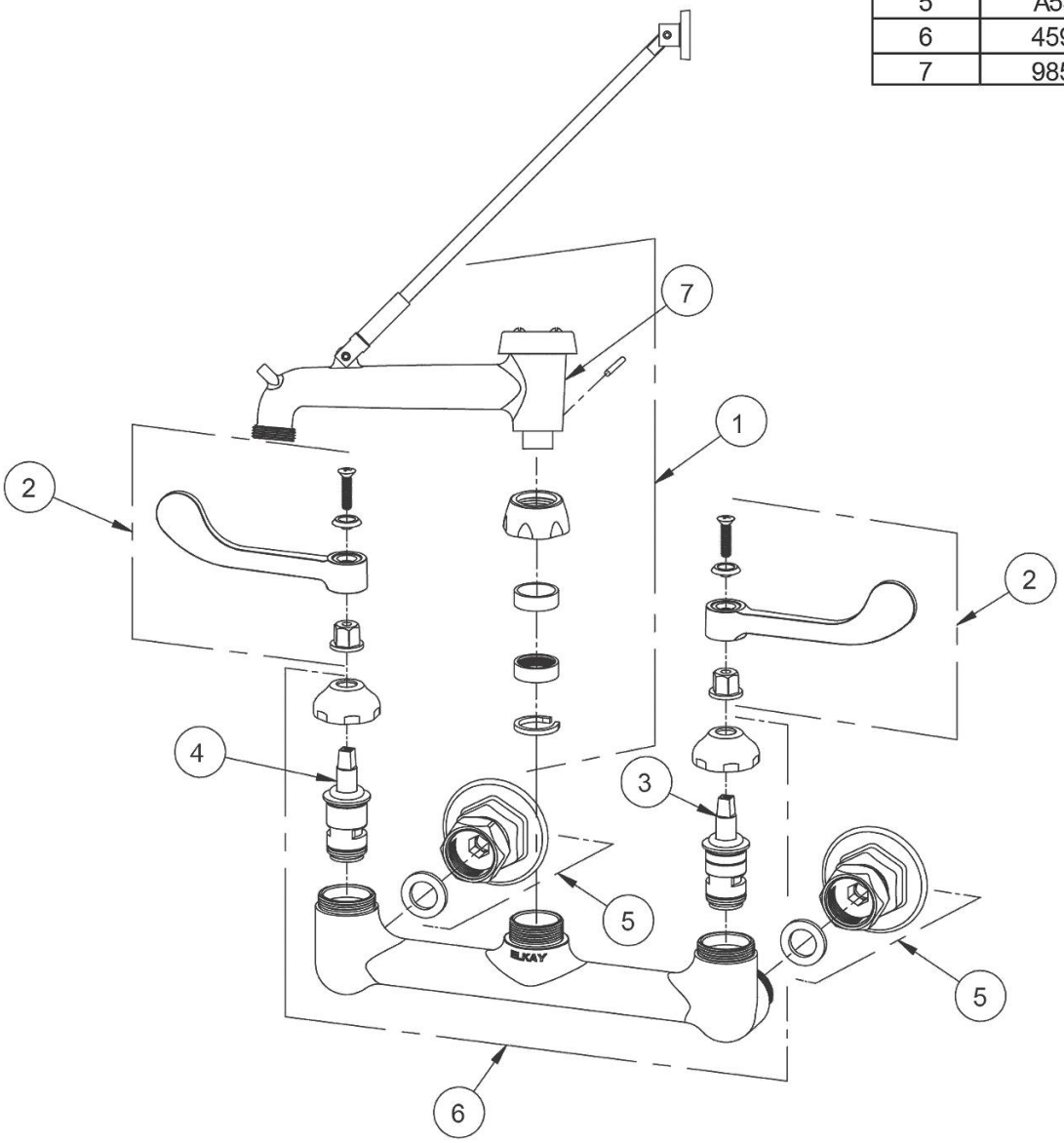

In keeping with our policy of continuing product improvement, Elkay reserves the right to change product specifications without notice. Please visit elkay.com for the most current version of Elkay product specification sheets. This specification describes an Elkay product with design, quality, and functional benefits to the user. When making a comparison of other producers' offerings, be certain these features are not overlooked.

© 2018

Z1305
WALL HYDRANT
Encased, Non-Freeze

NFHB-1 - Nonfreeze Wall Hydrant - Exterior

SPECIFICATION SHEET

TAG _____

Dimensional Data (inches and [mm]) are Subject to Manufacturing Tolerances and Change Without Notice

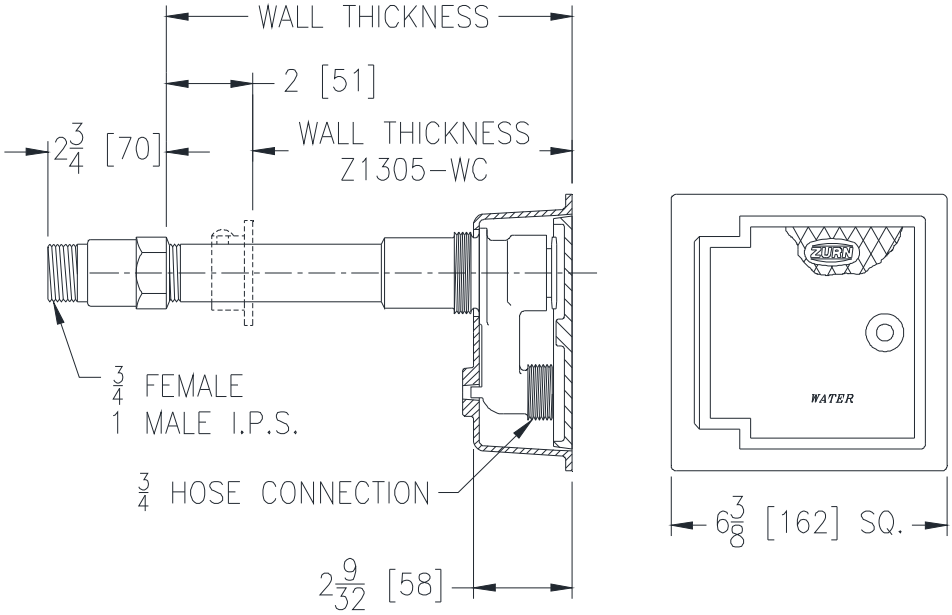

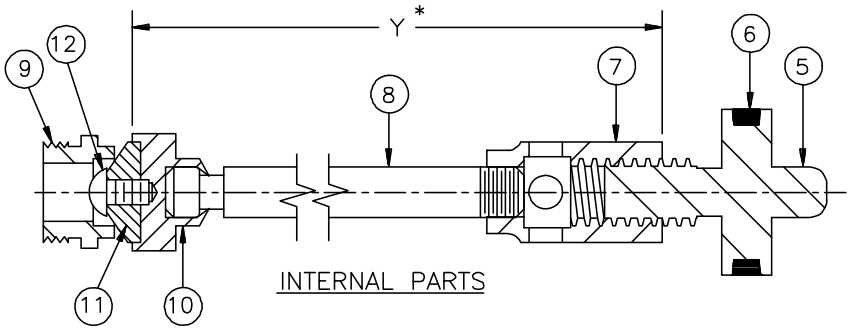

Wall Thickness Inches [mm]	Approx. Wt. Lbs. [kg]
6, 8 [152, 203]	11 [5]
10, 12, 14 [254, 305, 356]	13 [6]
16 [406]	15 [7]
24 [508]	17 [8]

ENGINEERING SPECIFICATION: ZURN Z1305
Encased, non-freeze, flush wall hydrant with bronze casing, all bronze interior parts, non-turning operating rod with free floating compression closure valve, replaceable bronze seat and seat washer, and combination 3/4" female or 1" male straight IP inlet. Nickel bronze box and hinged cover with operating key lock and "WATER" cast on cover.

OPTIONS (Check/specify appropriate options)

SUFFIXES

- ____ -PB Polished Bronze Face
- ____ -RA4 24 [610] Replacement Rod Assembly
- ____ -RK Hydrant Parts Repair Kit
- ____ -WC Wall Clamp
- ____ -34UN 3/4 [19] IP 90º Inlet Elbow w/Union Nut

PARTS LIST

Item	Name	Quan.
5	Operating Screw	1
6	O-Ring	1
7	Operating Coupling	1
8	Operating Rod	1
9	Removable Seat	1
10	Washer Guide	1
11	Washer (neoprene)	1
12	Screw	1

* Regularly furnished unless otherwise specified.

Zurn Industries, LLC | Specification Drainage Operation
1801 Pittsburgh Avenue, Erie, PA U.S.A. 16502 · Ph. 855-663-9876, Fax 814-454-7929
In Canada | **Zurn Industries Limited**
3544 Nashua Drive, Mississauga, Ontario L4V 1L2 · Ph. 905-405-8272, Fax 905-405-1292
www.zurn.com

Rev. H
Date: 09/27/2017
C.N. No. 137995
Prod. | Dwg. No. Z1305

GUY GRAY™ IPS CORPORATION

White Powder Coated Ice Maker Outlet Box

With Lead Free Hammer Arrester Valves

OB-1 - Ice Maker Outlet Box

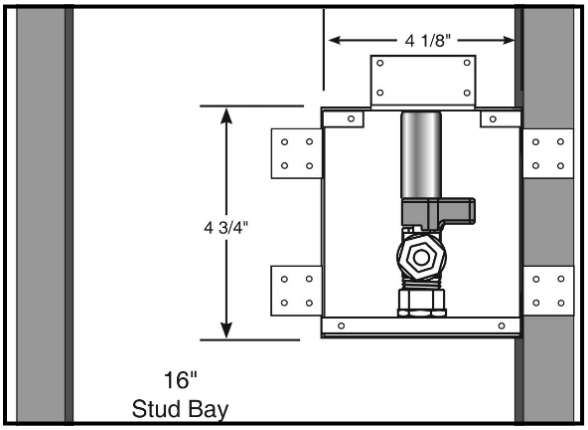

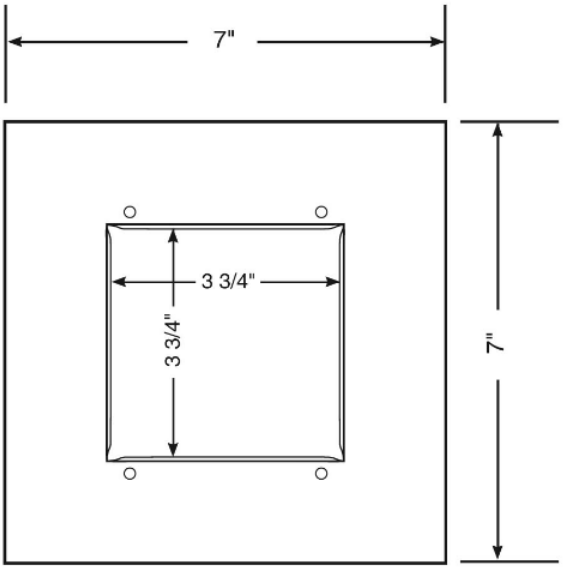

SPECIFICATION

Furnish and install recessed, white powder coated ice maker outlet box. Ice maker outlet box shall have a brass plated, quarter turn hammer arrester valve meeting Lead-Free requirements. Valve shall feature either Mylar® tag and AB1953 stamping or white handle and check-mark logo for easy Lead-Free identification. Unit shall be Guy Gray™ product code checked below as manufactured by IPS Corporation.

	Product Code #	Model Number	Product Description	Units/ Case
	88531	MIB1HAAB	Brass Qtr Turn Hammer Arrester Valve, Installed, 1/2" Sweat Conx.	5
	88533	MIB2HAAB	Brass Qtr Turn Hammer Arrester Valve, Installed, 1/2" CPVC Conx.	5

IPS® CORPORATION www.ipscorp.com watertite@ipscorp.com
500 Distribution Parkway, Collierville, TN 38017, USA ■ TEL: 901-853-5001 ■ WATS: 800-888-8312 ■ FAX: 901-853-5008

GUY GRAY™ IPS CORPORATION

White Powder Coated Ice Maker Outlet Box

With Lead Free Hammer Arrester Valves

OB-2 - Coffee Maker Outlet Box

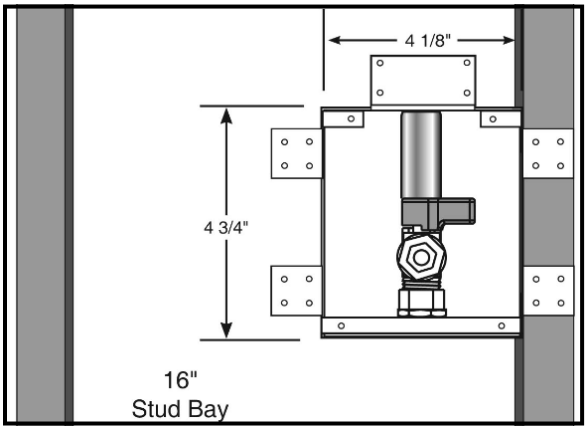

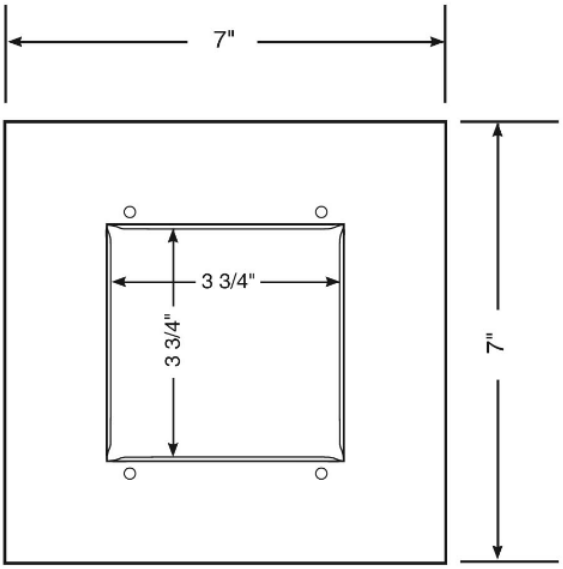

SPECIFICATION

Furnish and install recessed, white powder coated ice maker outlet box. Ice maker outlet box shall have a brass plated, quarter turn hammer arrester valve meeting Lead-Free requirements. Valve shall feature either Mylar® tag and AB1953 stamping or white handle and check-mark logo for easy Lead-Free identification. Unit shall be Guy Gray™ product code checked below as manufactured by IPS Corporation.

	Product Code #	Model Number	Product Description	Units/ Case
	88531	MIB1HAAB	Brass Qtr Turn Hammer Arrester Valve, Installed, 1/2" Sweat Conx.	5
	88533	MIB2HAAB	Brass Qtr Turn Hammer Arrester Valve, Installed, 1/2" CPVC Conx.	5

IPS® CORPORATION www.ipscorp.com watertite@ipscorp.com
500 Distribution Parkway, Collierville, TN 38017, USA ■ TEL: 901-853-5001 ■ WATS: 800-888-8312 ■ FAX: 901-853-5008

Z100 RD-1 - Roof Drain

15 [381] DIAMETER MAIN ROOF DRAIN
LOW SILHOUETTE DOME

SPECIFICATION SHEET

TAG _____

Dimensional Data (inches and [mm]) are Subject to Manufacturing Tolerances and Change Without Notice

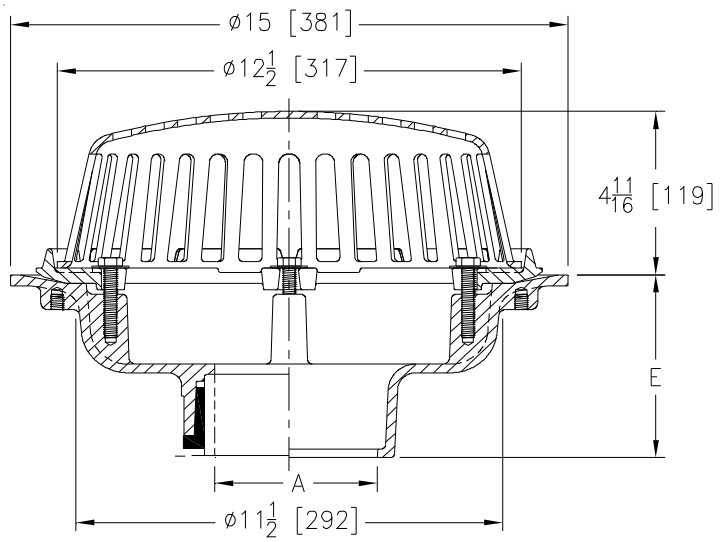

A Pipe Size In.[mm]	Approx. Wt. Lbs. [kg]	Dome Open Area Sq. In. [cm²]
2,3,4 [51,76,102]	26 [12]	103 [665]
5, 6 [127,152]	27 [12]	
8 [203]	28 [13]	

ENGINEERING SPECIFICATION: ZURN Z100
15" [381mm] Diameter roof drain. Dura-Coated cast iron body with combination membrane flashing clamp/gravel guard and low silhouette Poly-Dome.

OPTIONS (Check/specify appropriate options)

PIPE SIZE	(Specify size/type) OUTLET		E BODY HT. DIM.
3, 4, 5, 6 [76,102,127,152]	_____ IC	Inside Caulk	5-1/4 [133]
2, 3, 4, 6, 8 [51,76, 102, 152, 203]	_____ IP	Threaded	3-3/4 [95]
2, 3, 4, 6, 8 [51,76, 102, 152, 203]	_____ NH	No-Hub	5-1/4 [133]
2, 3, 4 [51,76,102]	_____ NL	Neo-Loc	4-9/16 [116]
6 [152]	_____ NL	Neo-Loc	5-7/16 [112]

PREFIXES

_____ Z D.C.C.I. Body with Poly-Dome*
_____ ZA D.C.C.I. Body with Aluminum Dome
_____ ZC D.C.C.I. Body with Cast Iron Dome
_____ ZRB D.C.C.I. Body with Plain Bronze Dome

SUFFIXES

____ -AC Angular Underdeck Clamp
____ -AR Acid Resistant Epoxy Coated
____ -AW 3/4 [19] to 4 [102] Adj. Water Level Regulator (Specify Height) (ZC Only)
____ -C Underdeck Clamp
____ -DE Deck Extension
____ -DP Top-Set® Deck Plate (Replaces both the -C and -R)
____ -DR Top-Set® Drain Riser
____ -E Static Extension 1 [25] thru 4 [102] (Specify Ht.)
____ -EA Adjustable Extension Assembly 2-1/8 [54] thru 3-1/2 [89]
____ -EB Top-Set® Adjustable Extension Assembly
____ -FG Flush Grate
____ -G Galvanized Cast Iron
____ -HD 6-3/4[171] High Aluminum Dome Strainer (148 Sq. In. [955 cm²] Open Area) (ZA Only)
____ -R Roof Sump Receiver
____ -SC Secondary Clamp Collar
____ -SS Stainless Steel Mesh Screen Over Dome
____ -ST Dome with Solid Top (ZA & ZC Only)
____ -TC Neo-Loc Test Cap Gasket (2, 3, 4 [51, 76, 102] NL Bottom Outlet Only)
____ -VP Vandal-Proof Secured Top
____ -W2 2 [51] Internal Water Dam
____ -W3 3 [76] Internal Water Dam
____ -W4 4 [102] Internal Water Dam
____ -84 Stainless Steel Perforated Gravel Guard
____ -85 Stainless Steel Perforated Extension
____ -89 2 [51] High External Water Dam
____ -90 90° Threaded Side Outlet Body

* Regularly furnished unless otherwise specified.

Zurn Industries, LLC | Specification Drainage Operation
1801 Pittsburgh Avenue, Erie, PA U.S.A. 16502 · Ph. 855-663-9876, Fax 814-454-7929
In Canada | **Zurn Industries Limited**
3544 Nashua Drive, Mississauga, Ontario L4V 1L2 · Ph. 905-405-8272, Fax 905-405-1292
www.zurn.com

Rev. P
Date: 03/20/20
C.N. No. 142506
Prod. | Dwg. No. Z100

RH-1 - Freezeless roof hydrant

The Woodford, ASSE 1057 listed, SRH Roof Hydrant is intended for irrigation purposes and to provide water, in any weather condition, on commercial building roofs. Applications include window washing, cleaning of condenser coils, cooling towers, green roofs and other types of roof top equipment. The SRH is backflow protected with a field testable ASSE 1052 double check backflow preventer.

The SRH does not require a drain line from the valve body located inside the building.

The SRH-MS *with* Mounting System allows for installation flexibility. It is not necessary to install hydrant when hydrant support is mounted to the roof. The hydrant support utilizes a 3″ diameter opening that allows the hydrant to be installed or easily removed at a later time. All necessary mounting hardware for proper installation on a commercial roof is supplied, including a 2 degree shim for pitch adjustment.

Hydrant Features:

- ASSE 1057 Listed
- No Drain Line Required - *With the hose removed*, a venturi action draws water out of the internal reservoir and discharges out the backflow preventer.
- Superior reservoir evacuation times without removing the backflow preventer.
- Variable flow plunger for longer life is not easily damaged and assures proper shut-off.
- Large easy to open lift handle.
- Adjustable link for easy adjustment and positive lever lock tension.
- All hydrant repairs can be made from top without removing hydrant.

Specifications:

- Hose Connection Backflow Preventer:
  - Model 50H with 3/4″ hose connection
  - ASSE 1052 Listed
  - Field Testable Dual Check holds against 125 psi backflow pressure
- ¾″ NPT female inlet connection.
- 1 ½″ U.S. made galvanized pipe.
- **Maximum Working Pressure:** 100 p.s.i.
- **Maximum Temperature:** 120° F

SRH WARNING	Supply PSI	Run Time
After each use, run hydrant without a hose to ensure proper evacuation.	60	5 seconds
	25	15 seconds

Mounting System: *(Can be ordered Separately)*

- Cast iron Hydrant Support
- Cast iron Under Deck Flange
  - 4 bolts draw tight against the roof decking and the hydrant support.
  - 3 clamp screws tighten against the hydrant pipe to secure the hydrant's vertical position through the roof.
- Well Seal seals tight between the hydrant support and hydrant pipe.
- EPDM Boot covers well seal and top of hydrant support.
- 2° Shim is supplied, if needed, for installation on pitched roofs.

Manufactured under U.S. patent 7,472,718; 7,730,901 and patents pending.

For Installation / Troubleshooting Instructions go to www.woodfordmfg.com or call 1-800-621-6032

WOODFORD

Freezeless Sanitary Roof Hydrant

No Drain Line Required!

Model SRH-MS

Can be ordered with or without Mounting System (MS).

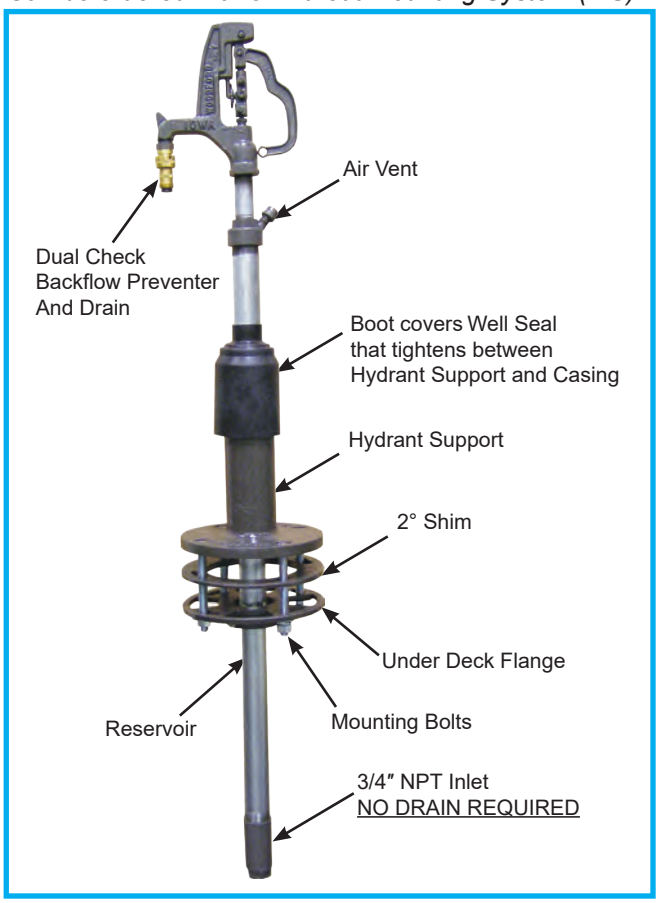

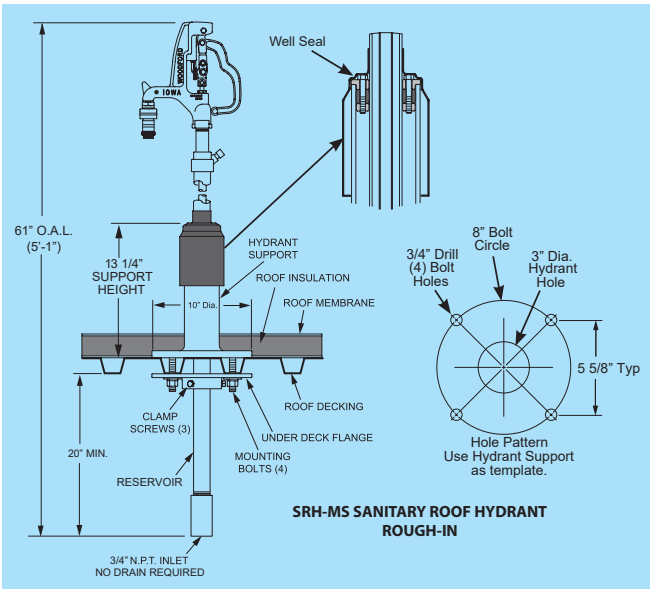

©2012 WOODFORD Mfg. 0110

Rev. 02/12 Form No. SRH-MS.105

Woodford Excellence Since 1929

Proudly Made In The U.S.A.

MODEL SRH-MS PARTS LIST

ITEM	PART#	DESCRIPTION
	15126	SRH Head Assembly (Includes Items 1-15, 23 & 24)
1	10632	SRH Head
2	10004	3/4" Brass Hose Nozzle
3	10100	Packing Nut
4	10101	Packing
5	10102	Packing Support Washer
6	15121	Brass Rod Stem
7	10117	O-Ring - 206
8	10206	Hex Nut (3)
9	10614	RH Upper Link
10	15242	RH Lower Link (Includes Item 11)
11	10019	Set Screw (2)
12	15243	RH Cam & Clevis Assembly
13	10020	Link Bolt (2)
14	10021	Lever Bolt
15	10613	RH Lever
16	10024	Operating Pipe
17	15122	Valve Body (3/4″ NPT Inlet)
18	15123	Venturi Assembly
19	10118	Valve Body O-Ring
20	50027	Support Washer
21	51013	Ball Valve Rubber
22	50028	Round Brass Nut
23	10116	Sealing Head Coupling
24	50H-BR	50H Backflow Preventer
25	15120	Upper Pipe Assembly
26	15124	SRH Vent Assembly
27	15125	SRH Casing Cover
28	10608	RH Boot, EPDM
29	10625	Bolt, Allen Head 1/4-20 X 1 3/4″ (4)
30	10626	Well Seal-1 1/2″, Top
31	10119	Well Seal-1 1/2″, EPDM
32	10627	Well Seal-1 1/2″, Bottom
33	10584	Bolt, Hex Head 5/8-11 X 6″ (4)
34	10579	Hydrant Support, Casting
35	10581	2° Shim, Casting
36	10580	Under Deck Flange
37	10607	Screw, Clamp 3/8-16 Hex Head X 1 3/4″ (3)
38	10604	Washer, Plain 5/8 (4)
39	10605	Washer, Lock 5/8 (4)
40	10585	Nut, Hex 5/8-11 UNC (4)
	RK-SRH	Repair Kit (Includes items 3-7, 19-22)
	RK-RHL	Repair Kit (Includes items 8-15)

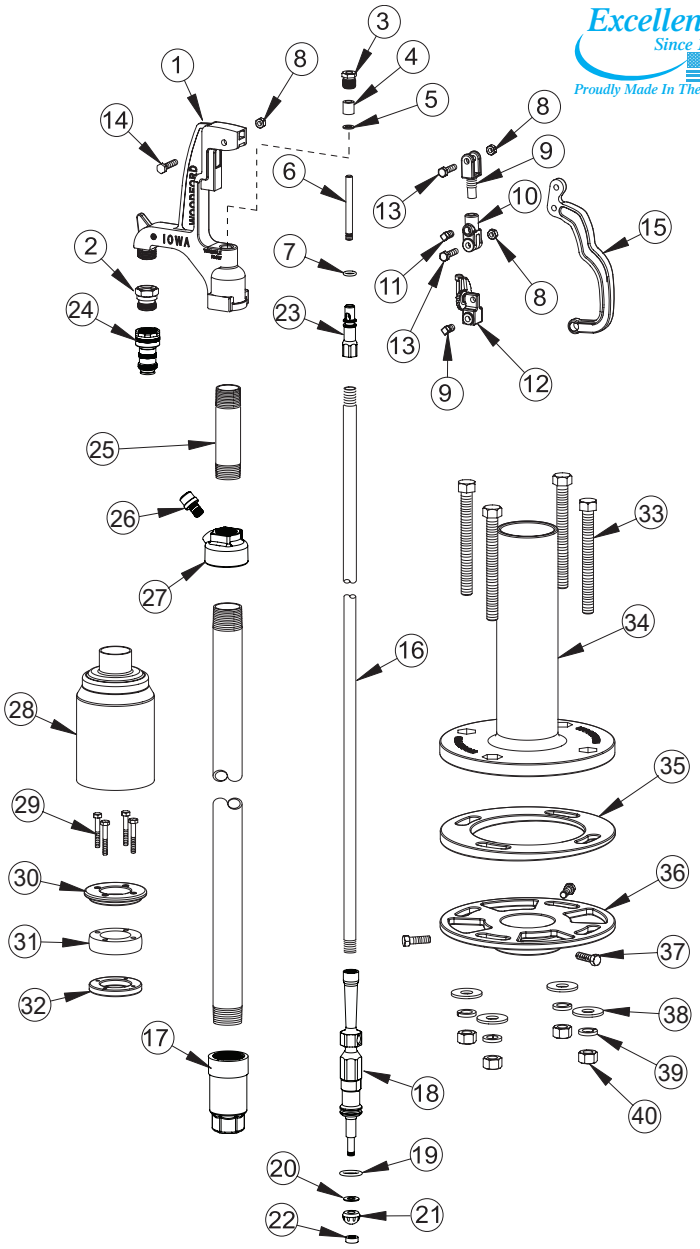

When ordering, specify SRH part number option listed below.

Part# SRH-MS Consists of the complete Roof Hydrant system:
Qty.1 **SRH** Hydrant shipped in 1 carton.
Qty. 1 **RH-MS** Mounting System shipped in 1 carton.

Total Shipping Wt.
2 cartons: 50 lbs

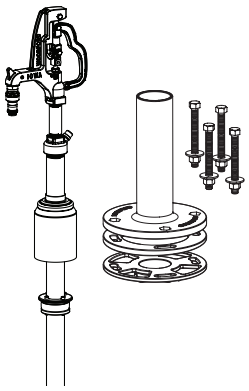

Part# RH-MS
Carton contents consists of:
Mounting System/ Rough-In Components (Parts 33-40 above)
- Hydrant Support
- 2° Shim,
- Under Deck Flange
- Mounting Bolts, Nuts, Washers.

Shipped in 1 Carton.
Shipping Wt. - 30 lbs

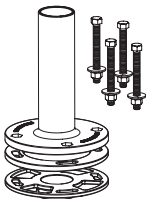

Part# SRH
Carton contents consists of:
- Hydrant Assembly (Parts 1-32 above)
- Well Seal (Parts 28-32 above)
- Boot (Part 28 above)

Shipped in 1 Carton.
Shipping Wt. - 20 lbs

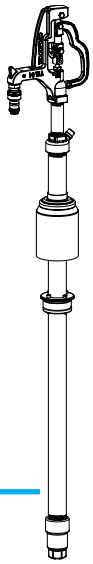

For more information contact...

WOODFORD MANUFACTURING COMPANY

2121 Waynoka Road, Colorado Springs, Colorado 80915 • **Phone:** (800) 621-6032 • **Fax:** (800) 765-4115
To view our complete product line visit: ***www.woodfordmfg.com*** *or email:* ***sales@woodfordmfg.com***
A Division Of WCM Industries, Inc.

ELKAY®
SPECIFICATIONS

Elkay Everyday Single Hole Deck Mount Kitchen Faucet with Pull-out Spray Lever Handle + Optional Escutcheon

Model(s) LK5000

SK-1 - Break Room Sink (Faucet)

PRODUCT SPECIFICATIONS

Elkay Everyday Single Hole Deck Mount Kitchen Faucet with Pull-out Spray Lever Handle + Optional Escutcheon. Faucet has a flow rate of 1.5 GPM, and is made of Brass material, with a Ceramic Disc valve. Faucet requires 1 faucet holes.

Mounting Type:	Deck Mount
Special Features:	Low Flow Solid Brass Waterway Construction
Spray Type:	Pull Out
Finish:	Chrome (CR), Lustrous Steel (LS)
Handle Type:	Lever Handle
Deck Clearance:	5"
Spout Reach:	9-1/2"
Spout Height:	7-3/8"
Hole Drillings:	1
Material:	Brass
Valve Type:	Ceramic Disc
Valve Connection:	3/8" Female Compression Hose Assembly
Flow Rate:	1.5 GPM
Faucet Hole Size (min):	1-3/8"
Countertop Thickness:	2-1/2
Spout Swing Rotation:	120°
Spout Type:	Pull-out Spray
Spray Functions:	Aerated, Spray

Special Note: 1.5 GPM flow regulator installed (2.2 GPM flow regulator also included with faucet)

OPTIONAL ACCESSORIES

LK320

Chrome (CR)

Lustrous Steel (LS)

Included with Product: **Optional 3-hole deck plate/escutcheon.**

AMERICAN PRIDE. A LIFETIME TRADITION.
Like your family, the Elkay family has values and traditions that endure. For almost a century, Elkay has been a family-owned and operated company, providing thousands of jobs that support our families and communities.

Product Compliance: ADA & ICC A117.1
ASME A112.18.1/CSA B125.1
CEC
NSF 61
NSF 372 (lead free)

Complies with ADA & ICC A117.1 accessibility requirements when installed according to the requirements outlined in these standards.

Clean and Care Manual (PDF)
Installation Instructions (PDF)
Warranty (PDF)

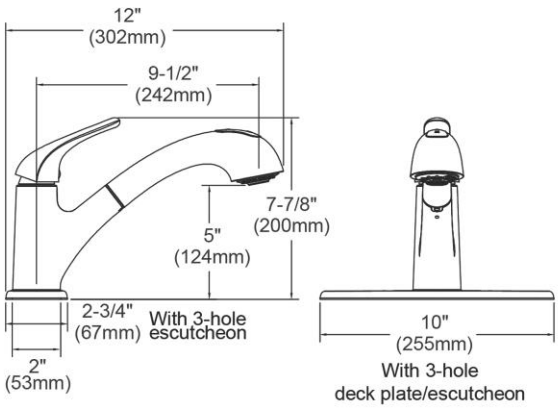

PART:_____QTY: _____

PROJECT:_____

CONTACT:_____

DATE:_____

NOTES:_____

APPROVAL:

In keeping with our policy of continuing product improvement, Elkay reserves the right to change product specifications without notice. Please visit elkay.com for the most current version of Elkay product specification sheets. This specification describes an Elkay product with design, quality, and functional benefits to the user. When making a comparison of other producers' offerings, be certain these features are not overlooked.

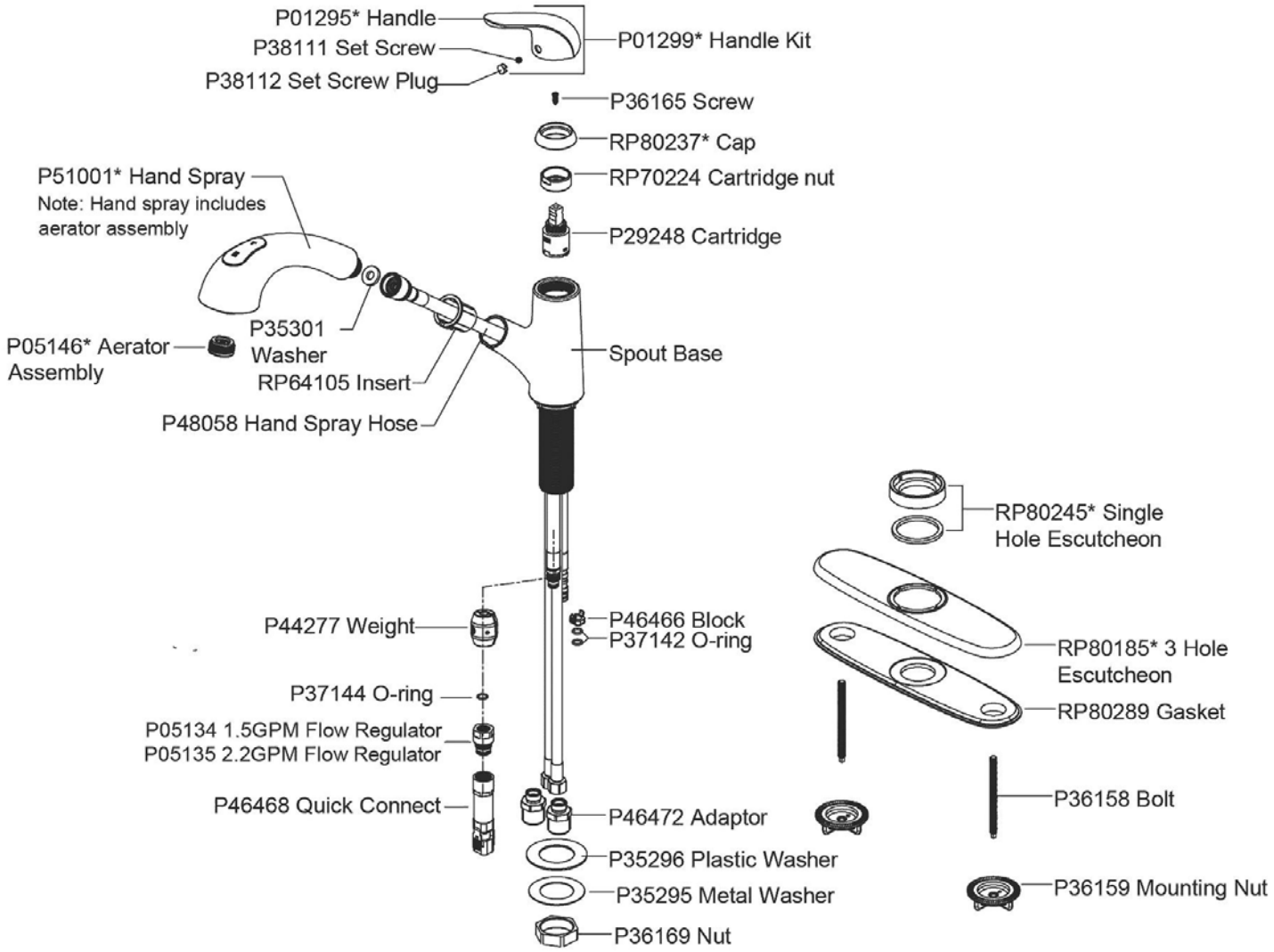

In keeping with our policy of continuing product improvement, Elkay reserves the right to change product specifications without notice. Please visit elkay.com for the most current version of Elkay product specification sheets. This specification describes an Elkay product with design, quality, and functional benefits to the user. When making a comparison of other producers' offerings, be certain these features are not overlooked.

SK-1 - Break Room Sink

SLN-ADA-2131-A-GR

SUBMITTAL DATA

ADA Compliant

INTEGRA GROUP

ADA COMPLIANT
INTEGRA DRAIN - SINGLE BOWL
LEDGE TYPE - 18 GA.

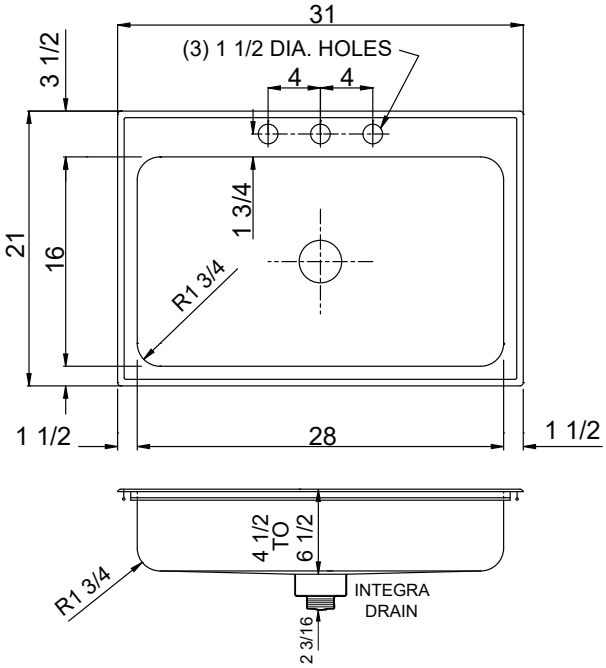

12.29 Gallon Capacity*

***CAPACITY MATTERS**
Max I.D. sizing with straight sided, non-tapered bowl confiuration. Tight corner radius design. Capacitybased on 6-1/2" bowl depth.

Seamless die-drawn construction of 18 gauge type 304 stainless steel. Interior and top surfaces satin blended No. 4 finish. Fully coated under-side insulates for sound and reduces condensation. Straight sided compartment with 1-3/4" radius corners provides greater capacity. Self-rimming top mount with Grip-Rim Plus with stainless steel mounting channels. DIntegra Drain integral drain system.

INTEGRA DRAIN SYSTEM

Integra Drain - seamlessly welded to sink creates integral drain in sink, without additional parts or rings. Reduces installation issues and leak potential. Includes basket strainer and tailpiece. Flat grid available in place of basket, specify I-SSF option.

To Be Specified:		
■ Faucet Hole Punching:		
	(1) Hole Centered	
	(2) Holes on 4" centers	
	(3) Holes on 4 "centers(illustrated)	
	Alternate Punching: Faucet Model:	Punching required:

DEPTH - MUST BE SPECIFIED:

4-1/2" DEEP	5" DEEP	5-1/2" DEEP	6" DEEP	6-1/2" DEEP

CUTOUT DIMENSIONS		
Model Number	Front-to-Back	Left-to-Right
SLN-ADA-2131-A-GR	20-1/4	30-1/4

* Cutout dimensions shown (Front-to-Back) x (Left-to-Right) - corners may be square or up to 1/2" radius.

Product Options	
I-SSF Integra St. Stl. Flat Grid	
-GB Garbage disposal outlet[1]	

[1]DISPOSER SINKS DISCLAIMER NOTE:
Just Integra Drain sinks are designed for compatible disposers manufactured by InSinkErator® which utilizes the Quick Lock® mounting system. Use of other disposers may void the Just warranty.
InSinkErator® and Quick Lock® are trademarks of Emerson Electric Co.

APPROVED FOR MANUFACTURING

MODEL NO.: **SLN-ADA-2131-A-GR** QTY: _____

JOB NAME: _____

TAG/ITEM: _____

CUSTOMER: _____

SIGNATURE: _____

MADE IN U.S.A.

JUST MFG. COMPANY CONTINUES TO MAKE QUALITY AND FUNCTIONALITY A MARK OF THE JUST PRODUCT LINE. WE RESERVE THE RIGHT TO CHANGE PRODUCT INFORMATION WITHOUT NOTICE. DIMENSIONS MAY CHANGE AND MAY BE SUBJECT TO CHANGE WITHOUT NOTICE. NO RESPONSIBILITY IS ASSUMED FOR USE OF SUPERCEDED OR VOIDED DATA. JUST MFG. CO. SINKS ARE MADE IN THE U.S.A. ALONG WITH FEATURES AND DIMENSIONS.

JUST MANUFACTURING COMPANY
9233 KING STREET . FRANKLIN PARK . ILLINOIS . 60131-2111
PH: 847-678-5150 . FAX: 847-678-6817 . E-MAIL: custserv@justmfg.com . www.justmfg.com

© 2014-2016-JUST MFG CO

ELKAY®
SPECIFICATIONS

Elkay Everyday Three Hole Deck Mount Kitchen Faucet with Lever Handle and Escutcheon Chrome

SK-2 - Mother's Room Sink (Faucet)

Model(s) LK1000CR

PRODUCT SPECIFICATIONS

Elkay Everyday Three Hole Deck Mount Kitchen Faucet with Lever Handle and Escutcheon Chrome. Faucet has a flow rate of 1.5 GPM, and is made of Brass material, with a Ceramic Disc valve. Faucet requires 3 faucet holes.

Mounting Type:	Deck Mount
Special Features:	Low Flow
Finish:	Chrome (CR)
Handle Type:	Lever Handle
Deck Clearance:	5"
Spout Reach:	8"
Spout Height:	6"
Hole Drillings:	3
Material:	Brass
Valve Type:	Ceramic Disc
Valve Connection:	3/8" Female Compression Hose Assembly
Flow Rate:	1.5 GPM
Faucet Hole Size (min):	1-3/8"
Countertop Thickness:	2-1/2
Spout Swing Rotation:	360°
Spout Type:	Standard

Special Note: 1.5 GPM flow regulator installed (2.2 GPM flow regulator also included with faucet)

Chrome
(CR)

AMERICAN PRIDE. A LIFETIME TRADITION.
Like your family, the Elkay family has values and traditions that endure. For almost a century, Elkay has been a family-owned and operated company, providing thousands of jobs that support our families and communities.

Product Compliance: ADA & ICC A117.1
ASME A112.18.1/CSA B125.1
NSF 61
NSF 372 (lead free)

Complies with ADA & ICC A117.1 accessibility requirements when installed according to the requirements outlined in these standards.

Clean and Care Manual (PDF)
Installation Instructions (PDF)
Limited Lifetime Warranty (PDF)

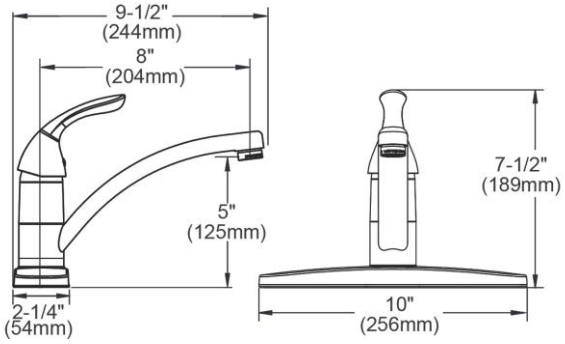

PART:_____QTY: _____

PROJECT:_____

CONTACT:_____

DATE:_____

NOTES:_____

APPROVAL:

In keeping with our policy of continuing product improvement, Elkay reserves the right to change product specifications without notice. Please visit elkay.com for the most current version of Elkay product specification sheets. This specification describes an Elkay product with design, quality, and functional benefits to the user. When making a comparison of other producers' offerings, be certain these features are not overlooked.

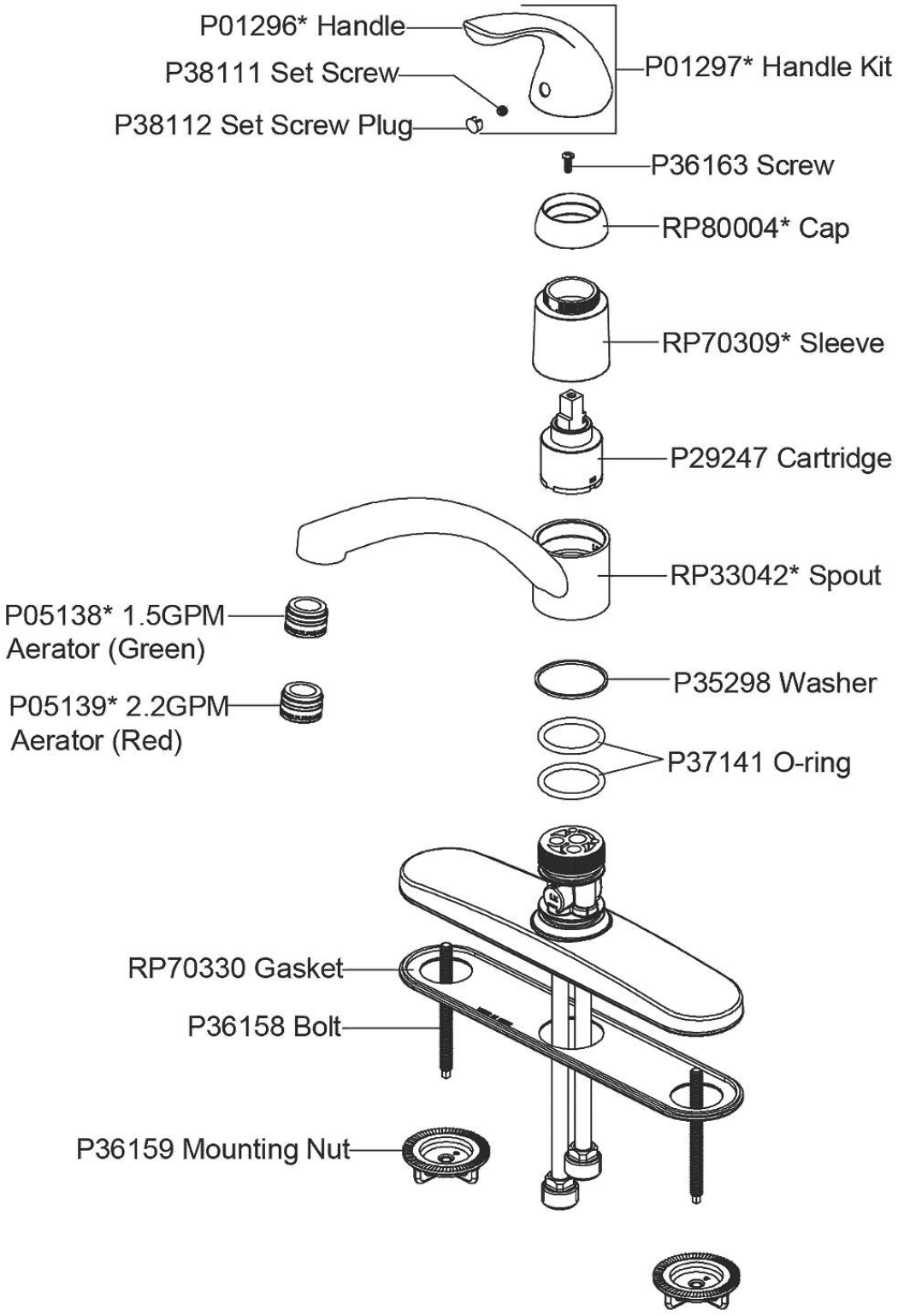

In keeping with our policy of continuing product improvement, Elkay reserves the right to change product specifications without notice. Please visit elkay.com for the most current version of Elkay product specification sheets. This specification describes an Elkay product with design, quality, and functional benefits to the user. When making a comparison of other producers' offerings, be certain these features are not overlooked.

SK-2 - Mother's Room Sink

SLN-ADA-2122-A-GR

SUBMITTAL DATA

ADA Compliant

INTEGRA GROUP

ADA COMPLIANT
INTEGRA DRAIN - SINGLE BOWL
LEDGE TYPE - 18 GA.

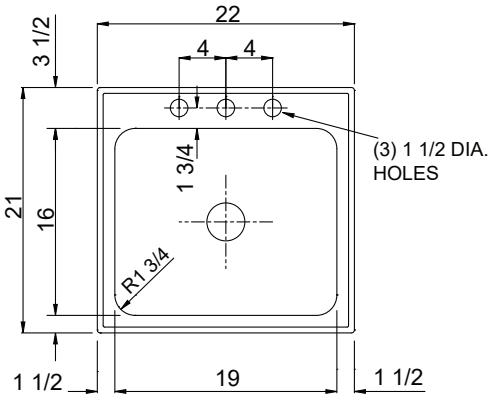

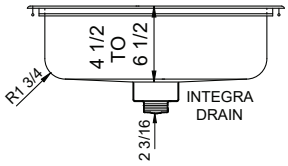

8.29 Gallon Capacity*

***CAPACITY MATTERS**
Max I.D. sizing with straight sided, non-tapered bowl confiuration.
Tight corner radius design. Capacitybased on 6-1/2" bowl depth.

Seamless die-drawn construction of 18 gauge type 304 stainless steel. Interior and top surfaces satin blended No. 4 finish. Fully coated under-side insulates for sound and reduces condensation. Straight sided compartment with 1-3/4" radius corners provides greater capacity. Self-rimming top mount with Grip-Rim Plus with stainless steel mounting channels. DIntegra Drain integral drain system.

Integra Drain - seamlessly die drawn; eliminating seam in sink bottom, resulting in a hygienic surface. No additional parts or rings. Reduces installation issues and leak potential. Includes basket strainer and tailpiece. Flat grid available in place of basket, specify I-SSF option.

To Be Specified:		
■ **Faucet Hole Punching:**		
	(1) Hole Centered	
	(2) Holes on 4" centers	
	(3) Holes on 4 "centers(illustrated)	
	Alternate Punching: Faucet Model:	Punching required:

DEPTH - MUST BE SPECIFIED:				
4-1/2" DEEP	5" DEEP	5-1/2" DEEP	6" DEEP	6-1/2" DEEP

CUTOUT DIMENSIONS		
Model Number	Front-to-Back	Left-to-Right
SLN-ADA-2122-A-GR	20-1/4	21-1/4

* Cutout dimensions shown (Front-to-Back) x (Left-to-Right) - corners may be square or up to 1/2" radius.

Product Options		
I-SSF	Integra St. Stl. Flat Grid	
-GB	Garbage disposal outlet[1]	

[1] DISPOSER SINKS DISCLAIMER NOTE:
Just Integra Drain sinks are designed for compatible disposers manufactured by InSinkErator® which utilizes the Quick Lock® mounting system. Use of other disposers may void the Just warranty.
InSinkErator® and Quick Lock® are trademarks of Emerson Electric Co.

APPROVED FOR MANUFACTURING

MODEL NO.: **SLN-ADA-2122-A-GR** QTY: _____

JOB NAME: _____

TAG/ITEM: _____

CUSTOMER: _____

SIGNATURE: _____

MADE IN U.S.A.

JUST MFG. COMPANY CONTINUES TO MAKE QUALITY AND FUNCTIONALITY A MARK OF THE JUST PRODUCT LINE. WE RESERVE THE RIGHT TO CHANGE PRODUCT INFORMATION WITHOUT NOTICE. DIMENSIONS MAY CHANGE AND MAY BE SUBJECT TO CHANGE WITHOUT NOTICE. NO RESPONSIBILITY IS ASSUMED FOR USE OF SUPERCEDED OR VOIDED DATA. JUST MFG. CO. SINKS ARE MADE IN THE U.S.A. ALONG WITH FEATURES AND DIMENSIONS.

JUST MANUFACTURING COMPANY 9233 KING STREET . FRANKLIN PARK . ILLINOIS . 60131-2111
PH: 847-678-5150 . FAX: 847-678-6817 . E-MAIL: custserv@justmfg.com . www.justmfg.com

© 2014-2016-JUST MFG CO

Trap Guard

SMITH® JAY R. SMITH MFG. CO.®
MEMBER OF MORRIS GROUP INTERNATIONAL
POST OFFICE BOX 3237
MONTGOMERY, ALABAMA 36109-0237 (USA)
TEL: 334-277-8520 FAX: 334-272-7396 www.jrsmith.com
CUSTOMER DRIVEN SINCE 1926
MEMBER OF:

LOCATION

QUAD CLOSE® TRAP SEAL

FUNCTION: The Quad Close Trap Seal forms a barrier to minimize the evaporation of the trap seal of a floor drain. The Quad Close Trap Seal will open to allow drainage and close when there is no flow. It is for use in floor drain outlets or the adjustable strainer throats.

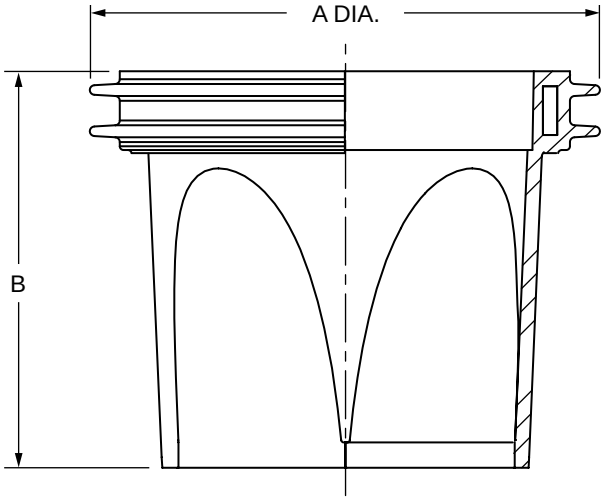

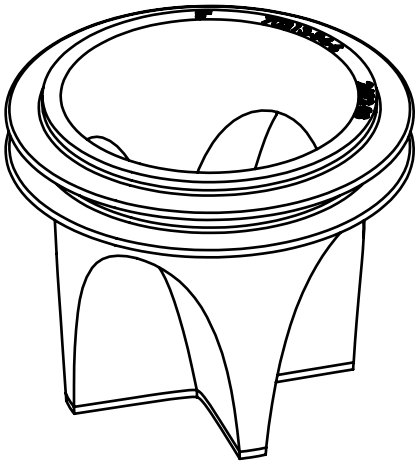

FIG. NO.	A (Pipe Size)	B	IAPMO LISTED ①	ASSE LISTED ①	GPM FLOW RATE ③
2692-0150	01.5(38)	2.09(53)	—	—	6.0 (22.7 L/M)
2692-02	02(50)	2.66(68)	FILE # 7479	REC.#1435 AF-GW ⑤	12.0 (45.4 L/M)
2692-03	03(75)	2.66(68)	FILE # 7479	REC.#1435 AF-GW ⑤	34.0 (128.7 L/M)
2692-0350 ②	0350(89) ②	2.66(68)	FILE # 7479	REC.#1435 AF-GW ⑤	51.0 (193.06 L/M)
2692-04	04(100)	2.66(68)	FILE # 7479	REC.#1435 AF-GW ⑤	73.0 (276.4 L/M)
2692-06	06(150)	3.66(93)	—	—	215.0 (814.0 L/M)

INSTALLATION: The 01.5(38), 02(50), 03(75), 04(100) & 06(150) Quad Close Trap Seal sizes install in the drain outlet. To install, simply insert the Quad Close Trap Seal in the drain outlet or ② throat of strainer until the top of it is flush with top of drain outlet or strainer throat. See reverse side of submittal for illustration.

NOTES:

① Tested by The IAPMO R&T Product Certification Agency to ASSE Standard #1072, Barrier Type Floor Drain Trap Seal Protection Devices. All sections of the Standard were successfully passed.
② The 0350 (89) Quad Close Trap seal size installs in the throat of Smith adjustable strainers. See reverse side of submittal for illustration.
③ Required flow rates per ASSE Standard #1072, Section I. All sizes meets or exceeds these flow rates.
④ Do not use in applications where the room/space has an atmospheric pressure less than the ambient pressure of the exterior of the room/space or building.
⑤ AF-GW represents floor designation/rated for all floor types per ASSE 1072, Section II.
⑥ Copies of the listing certificates and/or ASSE 1072 Test Report available upon request.

ONTARIO – BMEC
AUTHORIZATION NO. 14-04-370

NOTE: Dimensions shown in parentheses are in millimeters.

Patent No. 8,844,572

REV.	DATE	DESCRIPTION	BY	CKD. BY
K	9-9-16	Revised Note	TBW	JM
J	8-10-15	Added Note	TBW	CL
H	8-26-14	Revised Table	TBW	JM
G	7-30-14	Added L/M	TBW	JM

WEIGHT POUNDS
VOLUME CUBIC FEET

FIGURE NUMBER **2692**

K | DRAWING NUMBER s2692 | SIZE A | SCALE: NONE | DATE: 5-20-08 | APPROVED BY: JM | CHECKED BY: CL | DRAWN BY: RN | FIGURE NUMBER 2692

DIMENSIONS ARE SUBJECT TO MANUFACTURERS TOLERANCE AND CHANGE WITHOUT NOTICE
WE CAN ASSUME NO RESPONSIBILITY FOR USE OF SUPERSEDED OR VOID DATA

WARNING: Cancer and Reproductive Harm - www.P65Warnings.ca.gov

SMITH® JAY R. SMITH MFG. CO.®
MEMBER OF MORRIS GROUP INTERNATIONAL
POST OFFICE BOX 3237
MONTGOMERY, ALABAMA 36109-0237 (USA)
TEL: 334-277-8520 FAX: 334-272-7396 www.jrsmith.com
CUSTOMER DRIVEN SINCE 1926
MEMBER OF:

LOCATION

QUAD CLOSE® TRAP SEAL

Installation Illustrations

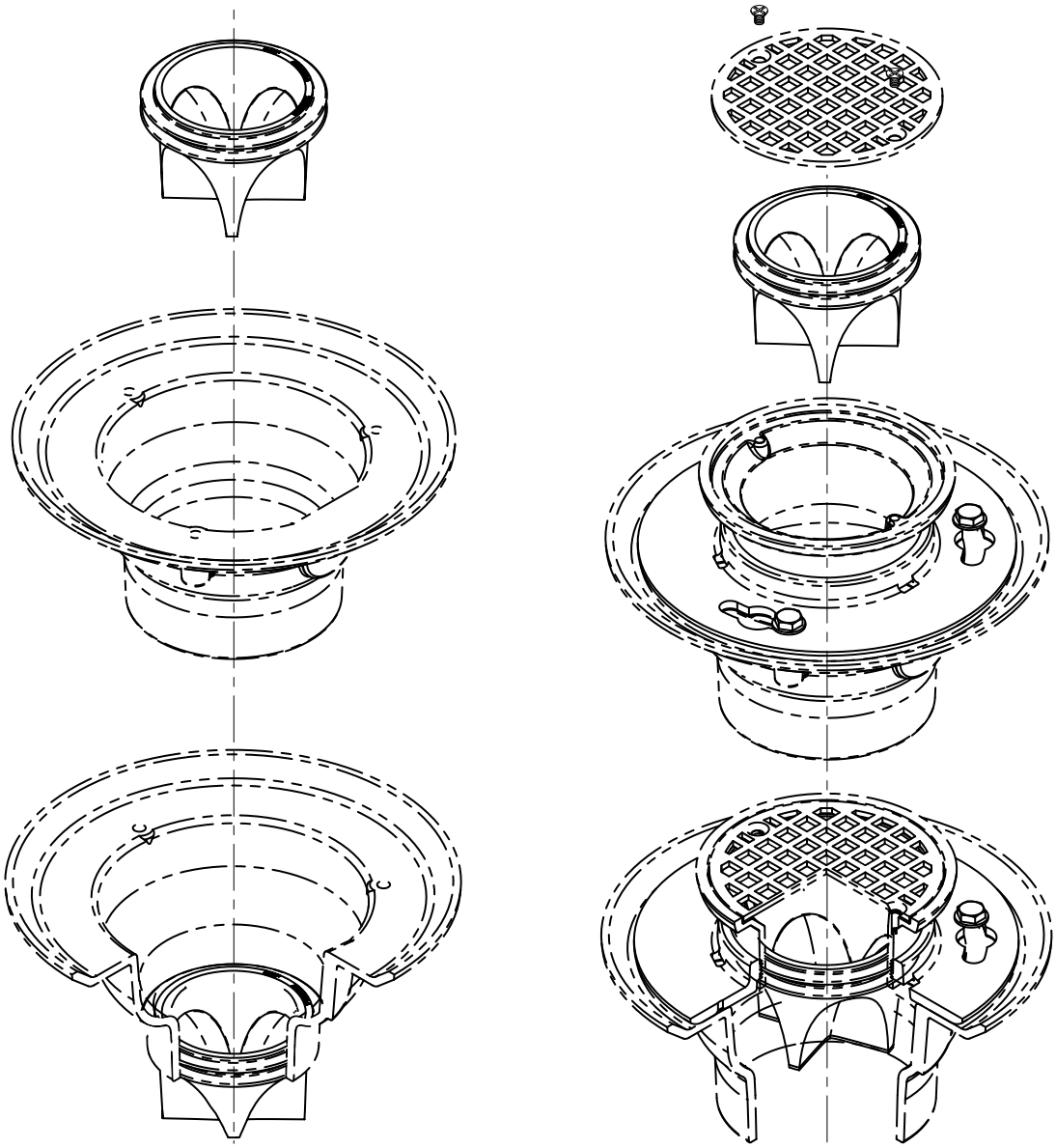

Installation in Drain
Body Outlet
0150(38), 02(50), 03(75), 04(100) & 06(150) Sizes

Installation in Strainer
Throat ②
0350(89) Size

INSTALLATION NOTES:

1. First clean the drain and pipe of any debris that could cause an odor or interfere with the Quad Close sealing properly.
2. Insert the Quad Close into the drain outlet or throat of adjustable strainer by pushing until it is in the bottom of drain outlet or throat of adjustable strainer.
3. Once in place, open the Quad Close to relieve any back pressure between it and the p-trap water seal. (Note: Installing the Quad Close in the closed position will force water out of the p-trap.)
4. To ensure the p-trap water seal is fully primed pour water slowly down the drain until the water level no longer rises below the drain.

REV.	DATE	DESCRIPTION	BY	CKD. BY
F	5-01-19	Revised Drawing/Install. Notes	MW	CL
E	3-30-15	Added Installation Notes	TBW	CL
D	8-26-14	Revised Installation	TBW	JM
C	4-24-12	Rev. Title, Installation	TBW	CL

WEIGHT POUNDS | VOLUME CUBIC FEET

FIGURE NUMBER **2692 BS**

DRAWING NUMBER s2692 BS | SIZE A | SCALE: NONE | DATE: 5-20-08 | APPROVED BY: JM | CHECKED BY: CL | DRAWN BY: RN | FIGURE NUMBER 2692 BS

DIMENSIONS ARE SUBJECT TO MANUFACTURERS TOLERANCE AND CHANGE WITHOUT NOTICE

WE CAN ASSUME NO RESPONSIBILITY FOR USE OF SUPERSEDED OR VOID DATA

WARNING: Cancer and Reproductive Harm - www.P65Warnings.ca.gov

U-1, U-2 - Urinal Flushometer

ECOS® SENSOR FLUSHOMETER
ECOS 8186-0.125-OR

CODE NUMBER
3250325

DESCRIPTION
0.125 gpf, Polished Chrome Finish, Fixture Connection Top Spud, Single Flush, Electrical Override, Battery, ECOS® Exposed Sensor Urinal Flushometer.

DETAILS
- Flush Volume: 0.125 gpf (0.5 Lpf)
- Finish: Polished Chrome (CP)
- Power Type: Battery ()
- Battery Life: 6 years
- Valve: Diaphragm
- Valve Body Material: Semi-red Brass
- Fixture Type: Urinal
- Fixture Connection: Top Spud
- Rough-In Dimension: 11 ½" (292mm)
- Spud Coupling: ¾" (19mm)
- Supply Pipe: ¾" (19mm)
- Override: Electrical (OR)

FEATURES
- Flex Tube Diaphragm designed for improved life and reduced maintenance
- Synthetic rubber seals for chloramine resistance
- “Low Battery” Flashing LED
- Sweat solder adapter with cover tube and cast wall flange with set screw
- Stop Seat and Vacuum Breaker Molded from PERMEX® Rubber Compound for Chloramine resistance
- Infrared Sensor with Multiple-focused, Lobular Sensing Fields for high and low target detection
- Fixed Metering Bypass and No External Volume Adjustment to Ensure Water Conservation
- Engineered Metal Cover with replaceable Lens Window
- Four (4) Size AA alkaline Batteries included
- Courtesy Flush® Override Button (optional)
- ADA Compliant Sloan ECOS® Battery powered Infrared Sensor for automatic “No Hands” operation
- 3/4” IPS screwdriver Bak-Chek® angle stop with vandal resistant stop cap

PERMEX® Synthetic Rubber Diaphragm with Dual Filtered Fixed Bypass

VIDEOS
PVD Special Finishes

COMPLIANCES & CERTIFICATIONS

(ADA Compliant, BAA Compliant, BREEAM Materials Credit, BREEAM Water Credit, Carbon Neutral, cUPC Certified, cUPC Green Certified, EPD, Green Globes Materials & Resources Credit, Green Globes Water Credit, HPD, LEED Materials & Resources EPD Credit, LEED Materials & Resources HPD Credit, LEED V4 Water Efficiency Credit, Satisfies LEED Credits, WaterSense Listed, WELL Building Standard)

RECOMMENDED SPECIFICATION
Valve Body, Cover, Tailpiece and Control Stop shall be in conformance with ASTM Alloy Classification for Semi- Red Brass. Valve shall be in compliance with the applicable sections of ASSE 1037 and ANSI/ASME 112.19.2.

ELECTRICAL SPECIFICATIONS
- Battery Life: 6 years

VALVE OPERATING PRESSURE (FLOWING)
15–80 PSI (103–552 kPa). Specific fixtures may require greater minimum flowing pressure - consult manufacturer requirements.

DOWNLOADS
- Sloan ECOS Valve Installation Instructions
- Sloan Ecos Valve (Spanish) Installation Instructions
- Control Stop Repair and Maintenance Guide
- Flush Connections Flanges Repair and Maintenance Guide
- Tail Piece Repair and Maintenance Guide
- ECOS Repair and Maintenance Guide
- Flushometer Pressure gauges
- Additional Downloads

Sloan 10500 Seymour Ave, Franklin Park, IL 60131
Phone: 800.982.5839 • Fax: 800.447.8329 • sloan.com

NOTES

All information contained within this document subject to change without notice.

Looking for other variations of the ECOS 8186 product? View the general spec sheet with all options.

Find a compatible urinal for this flushometer.
Find a compatible water closet for this flushometer.

WaterSense compliant when used with a WaterSense compliant fixture

ROUGH-IN

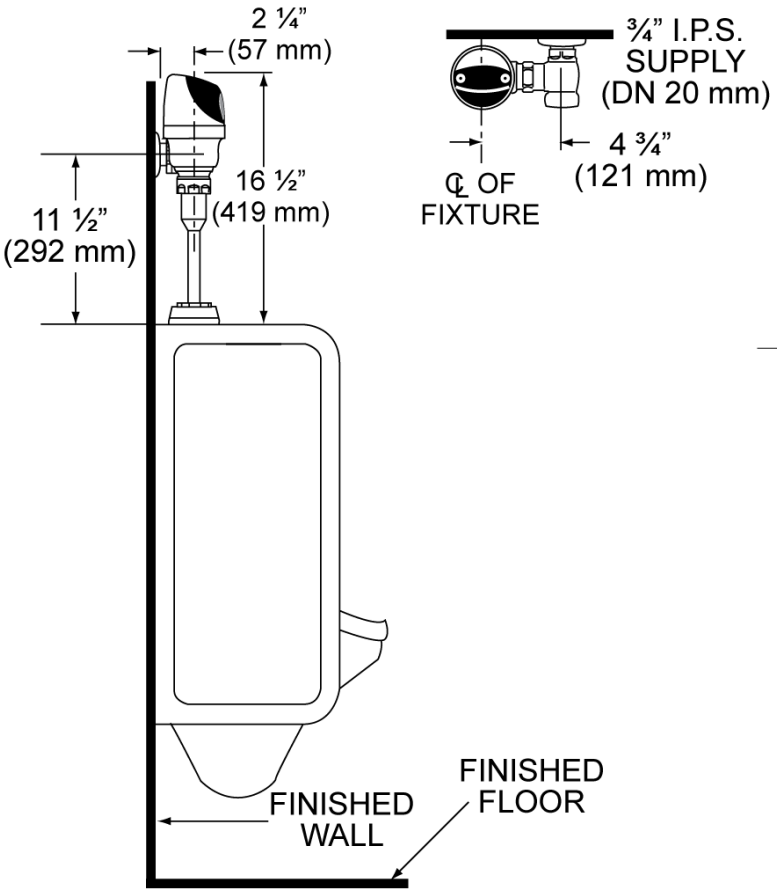

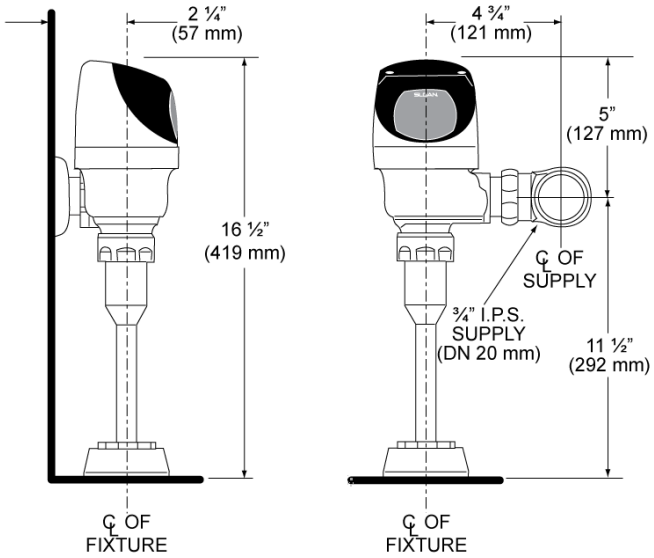

Sloan 10500 Seymour Ave, Franklin Park, IL 60131
Phone: 800.982.5839 • Fax: 800.447.8329 • sloan.com

Code 3250325 • Downloaded 10/29/21 • 08/03/21 • View Latest Version

U-1 & U-2 - Urinal

KOHLER®

Bardon™
High-Efficiency Urinal
K-4991-ET

Features
- Washout urinal.
- 3/4" (190 mm) top spud.
- 0.125 - 1.0 gpf (0.47 - 308 lpf).
- 14" (356 mm) extended rim.
- Will replace K-4904-ET.

Material
- Vitreous china.

Recommended Products/Accessories
K-7528 WAVE HES 1/8 GPF Urinal Flushometer
K-7537 Tripoint™ HES 0.5 GPF Urinal Flushometer
K-7526 WAVE HES 0.5 GPF Urinal Flushometer
K-13519 Manual 0.5 GPF Urinal Flushometer
K-10960 Tripoint™ DC 1.0 GPF Wshdwn Flushometer
K-13518 Manual 1.0 GPF Wshdwn Flushometer
K-7539 Tripoint™ HES 1.0 GPF Blwout Flushometer
K-7542 Tripoint™ HES 1.0 GPF Wshdwn Flushometer
K-7527 WAVE HES 1.0 GPF Wshdwn Flushometer
K-23726 Drain treatment
K-23725 Cast iron cleaner
K-4929 Waterless Urinal Maintenance Balls
K-7546-RF
K-10668-SV WAVE DC 1/8 GPF Urinal Flushometer
K-10949-SV Tripoint™DC 1/8 GPF Urinal Flushometer
K-76317 Manual 1/8 GPF Urinal Flushometer
K-7537-RF Tripoint™ HES 0.5 GPF Urinal Flushometer
K-10675-SV WAVE DC 0.5 GPF Urinal Flushometer
K-10958-SV Tripoint™ DC 0.5 GPF Urinal Flushometer
K-13519-RF Manual 0.5 GPF Urinal Flushometer
K-10676-SV WAVE DC 1.0 GPF Wshdwn Flushometer
K-10960-SV Tripoint™ DC 1.0 GPF Wshdwn Flushometer
K-76319 Manual 1.0 GPF Urinal Flushometer
K-76318 Manual 0.5 GPF Urinal Flushometer
K-13518-RF Manual 1.0 GPF Wshdwn Flushometer

Included Components
Additional Components:
2" outlet spud
3/4" inlet spud
Hanger(s) (Qty 2)
Strainer

ADA | **CSA B651**

WaterSense Meets EPA Criteria Certified by IAPMO R&T

Codes/Standards
ASME A112.19.2/CSA B45.1
DOE - Energy Policy Act 1992
EPA WaterSense®
California Energy Commission (CEC)
ADA
ICC/ANSI A117.1
CSA B651

KOHLER® One-Year Limited Warranty
See website for detailed warranty information.

Available Colors/Finishes
Color tiles intended for reference only.

Color	Code	Description
	0	White
	96	Biscuit
	47	Almond
	7	Black Black™

U-1 & U-2 - Urinal

KOHLER®

Bardon™
High-Efficiency Urinal
K-4991-ET

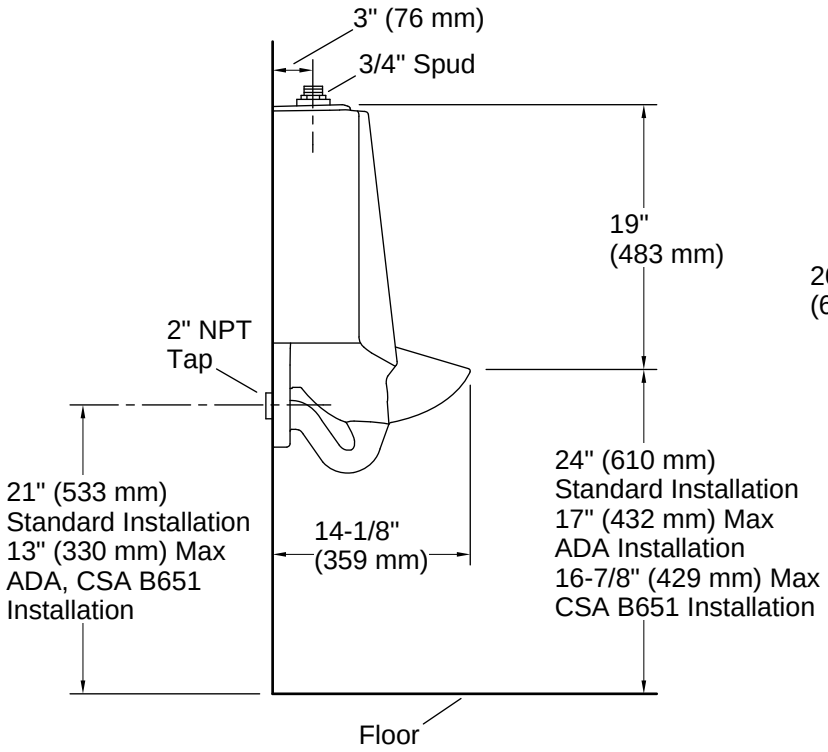

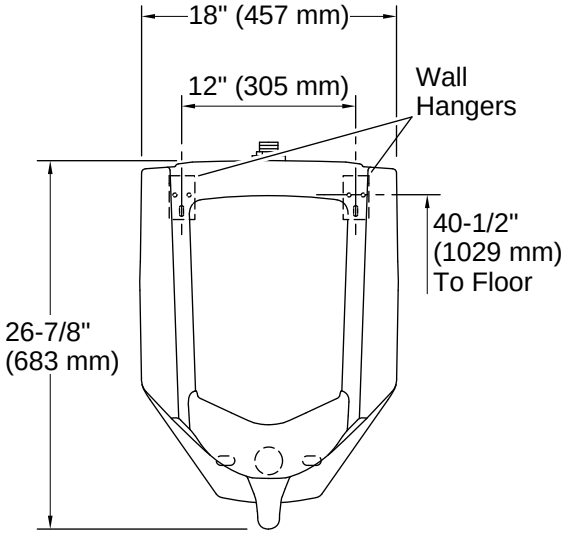

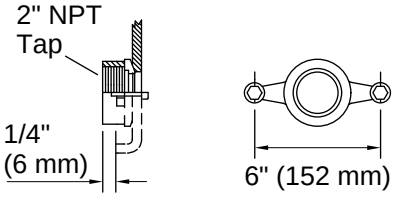

Outlet Detail

Technical Information

All product dimensions are nominal.

Flush outlet technology:	Washout
Spud size:	3/4", Inlet, Top
Min. Water per Flush:	0.125 gal (0.5 L)
Max. Water per Flush:	1 gal (3.8 L)

Designed for the above water use when installed with a water-saving flushometer.

Notes

Install this product according to the installation guide.

Refer to manufacturer's instructions and local codes for flushometer requirements.

Recommended ADA outlet spud height will account for normal product variation.

For ADA compliance, measurement must be 17" (432 mm) or less from the floor to the top of the lip. For CSA B651 compliance, measurement must be 16-7/8" (429 mm) or less from the floor to the top of the lip.

ADA, CSA B651 compliant when installed to the specific requirements of these regulations.

WC-1 & WC-2 - Water Closet Flushometer

ECOS® SENSOR FLUSHOMETER
ECOS 8111-1.28-OR

CODE NUMBER

3370448

DESCRIPTION

1.28 gpf, Polished Chrome Finish, Fixture Connection Top Spud, Single Flush, Electrical Override, Battery, ECOS® Exposed Sensor Water Closet Flushometer.

DETAILS

- Flush Volume: 1.28 gpf (4.8 Lpf)
- Finish: Polished Chrome (CP)
- Power Type: Battery ()
- Battery Life: 6 years
- Valve: Diaphragm
- Valve Body Material: Semi-red Brass
- Fixture Type: Water Closet
- Fixture Connection: Top Spud
- Rough-In Dimension: 11 ½" (292mm)
- Spud Coupling: 1 ½" (38mm)
- Supply Pipe: 1" (25mm)
- Override: Electrical (OR)

FEATURES

- Sweat Solder Adapter with Cover Tube and Cast Set Screw Wall Flange
- Handle Packing, Main Seat, Stop Seat and Vacuum Breaker Molded from PERMEX® Rubber Compound for Chloramine resistance
- User friendly three (3) second Flush Delay
- “Low Battery” Flashing LED
- Infrared Sensor with Multiple-focused, Lobular Sensing Fields for high and low target detection
- Fixed Metering Bypass and No External Volume Adjustment to Ensure Water Conservation
- Flex Tube Diaphragm designed for improved life and reduced maintenance
- Engineered Metal Cover with replaceable Lens Window
- Courtesy Flush® Override Button
- Four (4) Size AA Batteries included
- 1” I.P.S. Screwdriver Bak-Chek® Angle Stop with Free Spinning Vandal Resistant Stop Cap

PERMEX® Synthetic Rubber Diaphragm with Dual Filtered Fixed Bypass

VIDEOS

PVD Special Finishes

COMPLIANCES & CERTIFICATIONS

(ADA Compliant, BAA Compliant, BREEAM Materials Credit, BREEAM Water Credit, Carbon Neutral, cUPC Certified, cUPC Green Certified, EPD, Green Globes Materials & Resources Credit, Green Globes Water Credit, HPD, LEED Materials & Resources EPD Credit, LEED Materials & Resources HPD Credit, LEED V4 Water Efficiency Credit, Satisfies LEED Credits, WaterSense Listed, WELL Building Standard)

RECOMMENDED SPECIFICATION

Valve Body, Cover, Tailpiece and Control Stop shall be in conformance with ASTM Alloy Classification for Semi- Red Brass. Valve shall be in compliance with the applicable sections of ASSE 1037 and ANSI/ASME 112.19.2.

ELECTRICAL SPECIFICATIONS

- Battery Life: 6 years

VALVE OPERATING PRESSURE (FLOWING)

15–80 PSI (103–552 kPa). Specific fixtures may require greater minimum flowing pressure - consult manufacturer requirements.

DOWNLOADS

- Sloan ECOS Valve Installation Instructions
- Sloan Ecos Valve (Spanish) Installation Instructions
- Control Stop Repair and Maintenance Guide
- Flush Connections Flanges Repair and Maintenance Guide
- Tail Piece Repair and Maintenance Guide
- ECOS Repair and Maintenance Guide
- Flushometer Pressure gauges
- Additional Downloads

Sloan 10500 Seymour Ave, Franklin Park, IL 60131
Phone: 800.982.5839 • Fax: 800.447.8329 • sloan.com

NOTES

All information contained within this document subject to change without notice.

Looking for other variations of the ECOS 8111 product? View the general spec sheet with all options.

Find a compatible urinal for this flushometer.
Find a compatible water closet for this flushometer.

WaterSense compliant when used with a WaterSense compliant fixture

ROUGH-IN

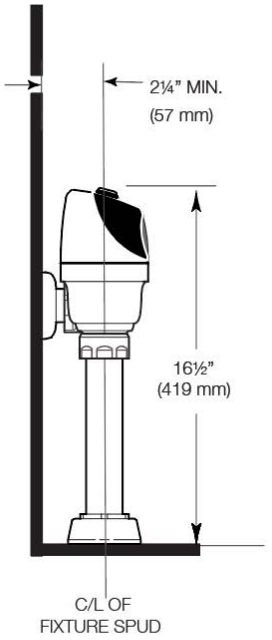

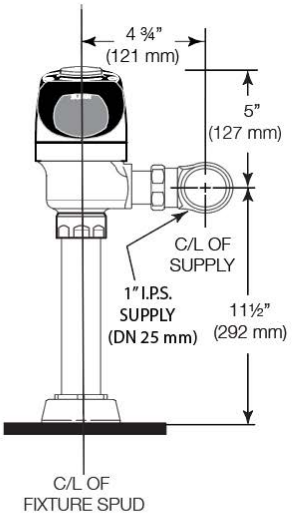

ALTERNATE ADA INSTALLATION

Lower water supply rough-in to 10" (254 mm) and mount grab bar at the 36" (914 mm) maximum allowed height (top of grab bar at 36").

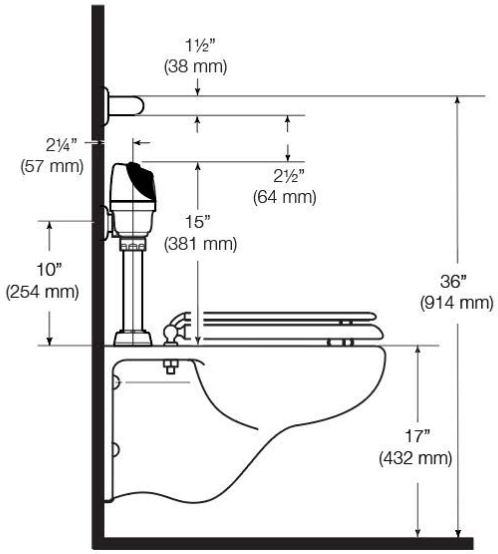

WHEN INSTALLING IN A HANDICAP STALL:
Per the ADA Guildlines (section 604.9.4) it is recommended that the grab bars be split or shifted to the wide side of the stall. If grab bars must be present over the valve, use the alternate ADA installation as shown to the right.

Sloan 10500 Seymour Ave, Franklin Park, IL 60131
Phone: 800.982.5839 • Fax: 800.447.8329 • sloan.com

Code 3370448 • Downloaded 10/29/21 • 08/03/21 • View Latest Version

Elongated Wall Hung Closet Fixture
Model ST-2459

WC-1, WC-2 - Water Closet

▶ Code Number
2102459

▶ Description
Vitreous china wall hung water closet.

▶ Flush Cycle
Flush volume is determined by the flushometer used with fixture

1.1 to 1.6 gpf/4.2 to 6.0 Lpf

▶ Fixture Specification
- White Vitreous china
- Wall hung, wall outlet
- Siphon jet flushing action achieves 1000g Map score
- Static load rating of 750 lbs (see Notes)
- Integral flushing rim
- Elongated bowl
- Water spot area 11 ¼" x 8 ½"
- Toilet seat not included
- 1-1/2" I.P.S. top spud inlet
- 2⅛" fully glazed trapway

Recommended Seats
- Bemis - 1955CT/1955SSCT & 2155CT/2155SSCT
- Church - 295CT/295SSCT & 2155CT/2155SSCT

▶ Plumbing System Requirements
- Maximum Static Pressure: 80 PSI
- Minimum Flowing Pressure: 25 PSI
- Minimum Flow Rate: 25 GPM

▶ Product Specification
- Elongated water closet shall be made of vitreous china with a 1-1/2" top spud. Bowl shall be ADA compliant. Water Closet shall be wall hung. Water closet shall be Sloan Model ST-2459.

▶ Notes
- This model meets the requirements for a High Efficiency Toilet when used with a high efficiency flushometer (1.28 gpf/4.8 Lpf or 1.1/1.6 gpf-4.2/6.0 Lpf dual-flush).
- All information contained in this document subject to change without written notice
- NOTE: All vitreous china dimensions shown in these drawings are nominal and not to scale. Dimensions can vary within the tolerances established in the governing ASME A112.19/CSA B45.1 standard. It is important to consider this when planning rough-in and plumbing layouts.
- Static load tested according to the procedure in Section 6.7 of ASME A112.19.2. Not recommended for bariatric use.

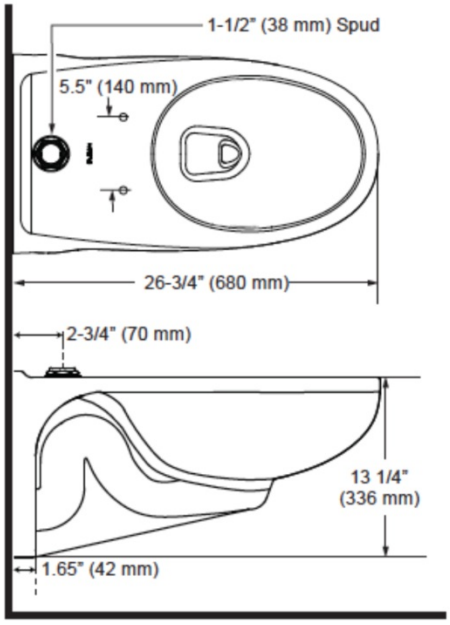

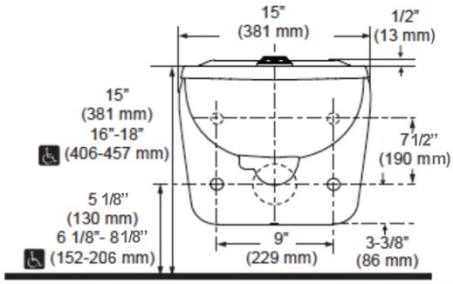

▶ Compliance & Certifications
CEC Compliant

This space for Architect/Engineer Approval

SLOAN 10500 SEYMOUR AVE. ● FRANKLIN PARK, ● IL. 60131
Ph: 1-800-9-VALVE-9 or 1-847-671-4300 ● Fax: 1-800-447-8329 or 1-847-671-4380 ● http://www.sloan.com

WCO - Wall Cleanout

WATTS®	**CO-380-RD** **Tag:** _____	**Wall Cleanout with Brass Plug and Stainless Steel Cover**

SPECIFICATION: Watts Drainage CO-380-RD cast iron wall cleanout with gasketed brass countersunk plug, stainless steel access cover, vandal proof stainless steel screw, and no hub connection.

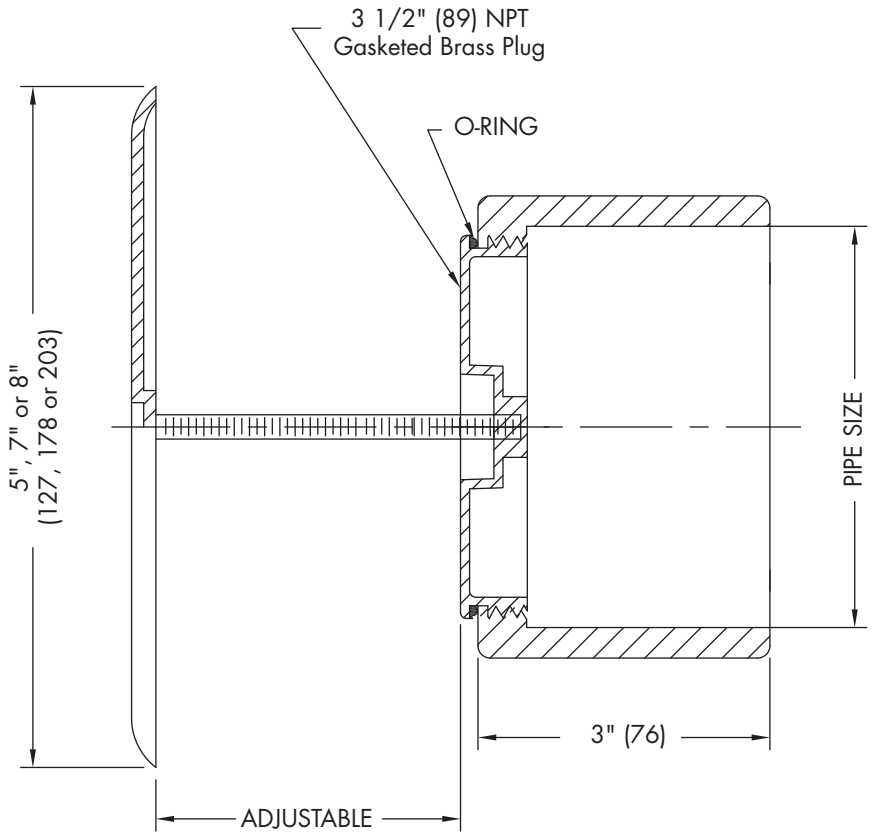

PIPE SIZE	COVER SIZE
2" (51)	5"(127)
3" (76)	7"(178)
4" (102)	7"(178)
6" (152)	8"(203)

Options (Select One or More)	
Suffix	**Description**
-US	Buy American Compliant ☐

Job Name _____ Contractor _____

Job Location _____ Contractor's P.O. No. _____

Engineer _____ Representative _____

WATTS Drainage reserves the right to modify or change product design or construction without prior notice and without incurring any obligation to make similar changes and modifications to products previously or subsequently sold. See your WATTS Drainage representative for any clarification. Dimensions are subject to manufacturing tolerances.

WATTS®
Specification Drainage Products
USA: 100 Watts Road, Spindale, NC, 28160-2298; TEL: 828-288-2179 TOLL-FREE: 1-800-338-2581 www.watts.com

WHA - Water Hammer Arrestor

For Commercial Applications

Job Name _____ Contractor _____

Job Location _____ Approval _____

Engineer _____ Contractor's P.O. No. _____

Approval _____ Representative _____

LEAD FREE*

Series LF15M2

Water Hammer Arrestors

Sizes: ½" - 1"

What is Water Hammer?

The noise from banging pipes is caused by shocks of high speed water flowing in the piping system when a fixture is suddenly closed. Sudden stoppage of the water (a non-compressible liquid) flowing at a given pressure and velocity causes a surge or spike of water and is called water hammer. When this occurs, a pressure wave travels back through the piping until it finds a point of relief. The LF15M2 and LF15M2S Water Hammer Arrestors are designed to eliminate this effect. The LF15M2 and LF15M2S features Lead Free* construction to comply with Lead Free* requirements.

Dishwashers, clothes washers, fast closing positive shutoff valves incorporated in the system all contribute to creating water shock which is not only annoying but damaging to pipes and appliances. The Watts Series LF15M2 and LF15M2S incorporates a pre-charged, permanent sealed air chamber to absorb the shock. The sealed chamber prevents the loss of air to the water and assures long and trouble-free life.

Features

- NPT solid hex brass adapter or solder end connection for easy installation
- Approved for installation with no access panel required
- May be installed in new or existing plumbing systems with a standard pipe tee vertically, horizontally or at any angle
- PDI Listed (PDI WH201)
- Maintenance free – piston is the only moving part
- Air pre-load is 60psi (4.2 bar)
- Factory air charged and permanently sealed

Standards

Certified to NSF/ANSI 372

Standard: Listed by IAPMO, ASSE 1010 approved, ANSI A112.26.1M approved, PDI WH201 approved and certified.

LF15M2

LF15M2S

Pressure – Temperature

Operating Pressure: Designed to operate on all domestic and commercial lines @ 150psi (10.6 bar) working pressure.

Temperature Range: 33°F to 180°F (0.5°C to 82°C).

Materials

Body:	Copper
Piston:	Polypropylene
Threaded Adapter:	Lead Free* Brass
O-ring:	EPDM

NOTICE

The information contained herein is not intended to replace the full product installation and safety information available or the experience of a trained product installer. You are required to thoroughly read all installation instructions and product safety information before beginning the installation of this product.

NOTICE

Inquire with governing authorities for local installation requirements

***The wetted surface of this product contacted by consumable water contains less than 0.25% of lead by weight.**

Watts product specifications in U.S. customary units and metric are approximate and are provided for reference only. For precise measurements, please contact Watts Technical Service. Watts reserves the right to change or modify product design, construction, specifications, or materials without prior notice and without incurring any obligation to make such changes and modifications on Watts products previously or subsequently sold.

WATTS®

WHA - Water Hammer Arrestor

Sizing and Placement

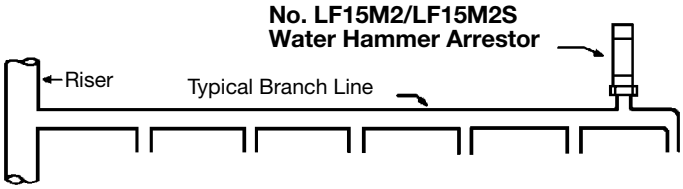

As shown, it has been established that the preferred location for the water hammer arrestor is at the end of the branch line between the last two fixtures served.

The location of the water hammer arrestor shown above applies to branch lines that do not exceed 20 ft. (6m) in length, from the start of the horizontal branch line to the last fixture supply on this branch line. When the branch line exceeds the 20 ft. (6m) length, an additional water hammer arrestor should be used. This practice is best defined by two rules which have been established to cover the placement of water hammer arrestors.

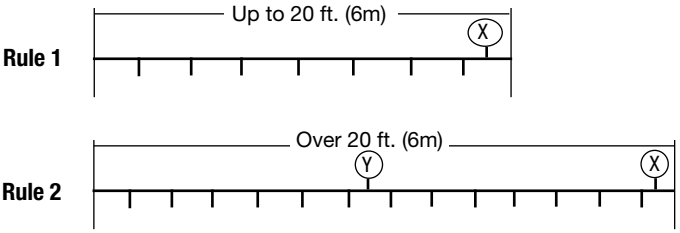

Rule 1 covers multiple fixture branch lines which do not exceed 20 ft. (6m) in length.

Explanation - Fixture-unit sizing and selection table is used to select the required PDI unit (water hammer arrestor).

Rule 2 covers multiple fixture branch lines which do exceed 20 ft. (6m) in length.

Explanation - Fixture-unit sizing and selection table is used to select the required PDI unit (water hammer arrestor). The sum of the fixture units rating of units X and Y shall be equal to or greater than the demand of the branches.

Sizing and Selection Table

SIZE	MODEL	ORDER CODE	MODEL	ORDER CODE	CROSS FIXTURE UNITS	REF. PDI STANDARD
in.	*Threaded*		*Solder*			
½"	LF15M2-A	0750160	LF15M2-AS	0750150	1-11	A
¾"	LF15M2-B	0750161	LF15M2-BS	0750151	12-32	B
1"	LF15M2-C	0750162	LF15M2-CS	0750152	33-60	C
1"	LF15M2-D	0750163	LF15M2-DS	0750153	61-113	D
1"	LF15M2-E	0750164	LF15M2-ES	0750154	114-154	E
1"	LF15M2-F	0750165	LF15M2-FS	0750155	155-330	F

Fixture Units Sizing Information

FIXTURE	TYPE OF SUPPLY CONTROL	FIXTURE UNITS PUBLIC TOTAL	PUBLIC C.W.	PUBLIC H.W.	PRIVATE TOTAL	PRIVATE C.W.	PRIVATE H.W.
Water Closet 1.66 PF	Flush Valve	8	8	–	5	5	–
Water Closet 1.66 PF	Flush Tank	5	5	–	2.5	2.5	–
Pedestal Urinal 1.06 PF	Flush Valve	4	4	–	–	–	–
Stall or Wall Urinal	Flush Valve 1.06 PF	4	4	–	–	–	–
Stall or Wall Urinal	Flush Tank 1.06 PF	2	2	–	–	–	–
Lavatory	Faucet	2	1½	1½	1	1	1
Bathtub	Faucet	4	2	3	2	1½	1½
Shower Head	Mixing Valve	4	2	3	2	1	2
Bathroom Group	Flush Valve Closet	–	–	–	8	8	3
Bathroom Group	Flush Tank Closet	–	–	–	6	6	3
Separate Shower	Mixing Valve	–	–	–	2	1	2
Service Sink	Faucet	3	3	3	–	–	–
Laundry Tubs (1-3)	Faucet	–	–	–	3	3	3
Combination Fixture	Faucet	–	–	–	3	3	3

Dimensions – Weight

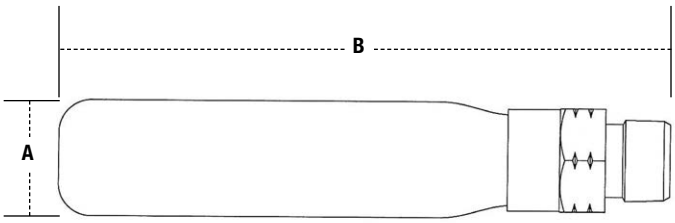

SIZE		DIMENSIONS A in.	A mm	B in.	B mm	WEIGHT lbs.	kgs
Threaded							
½"	LF15M2-A	1⅛	28.5	5 15/16	150.9	0.5	0.2
¾"	LF15M2-B	1⅜	34.9	8 9/16	218.0	0.9	0.4
1"	LF15M2-C	1⅝	41.3	8 13/16	223.5	1.3	0.6
1"	LF15M2-D	2⅛	54.0	9 15/16	252.5	2.0	0.9
1"	LF15M2-E	2⅛	54.0	12 11/16	322.5	2.3	1.1
1"	LF15M2-F	2⅝	66.7	11 5/32	283.5	2.7	1.2
Solder							
½"	LF15M2-AS	1⅛	28.5	8¼	210.0	0.44	0.2
¾"	LF15M2-BS	1⅛	28.5	10	254.0	0.54	0.2
1"	LF15M2-CS	1⅜	34.9	12½	317.5	0.92	0.4
1"	LF15M2-DS	2⅛	54.0	11	280.0	1.63	0.7
1"	LF15M2-ES	2⅛	54.0	13½	343.0	1.98	0.9
1"	LF15M2-FS	2⅛	54.0	16	406.5	2.32	1.1

USA: T: (978) 689-6066 • F: (978) 975-8350 • Watts.com
Canada: T: (905) 332-4090 • F: (905) 332-7068 • Watts.ca
Latin America: T: (52) 81-1001-8600 • Watts.com

© 2013 Watts

APPENDIX 6:

ELECTRICAL
CALCULATIONS AND DATA SHEETS

Electrical Basis of Design and Product Data

1 Power Calculations

a. Load Analysis

b. Service, Feeder, and Special Circuit Sizing Information

2 Lighting Calculations

3 Manufacturer Product Data Sheets

Facility Power Loads - Tabulation Summary						
Line Item No.	Load Type Description	Connected Load Volt-Ampere (VA)	Voltage	Connected Load kVA	Load Factor	Sub Total kVA
1	Lighting	20000	277V	20.0	1.0	20.0
2	General Purpose Receptacles	70200	120V	70.2	NEC	40.1
3	Furniture Receptacles	1368000	120V	136.8	NEC	73.4
4	Roof Top Units	251910	480V	251.9	0.75	188.9
5	Electrical Water Heater	9152	480V	9.2	0.50	4.6
6	Pumps	1704	208V	1.7	0.60	1.0
8	Fans	1056	120V	1.1	0.75	0.8
9	Condenser Units	20884	277V	20.9	0.75	15.7
10	Unit Heaters	3168	120V	3.2	0.60	1.9
11	VAV Boxes	30000	480V	30.0	0.60	18.0
12	VAV Boxes	181000	277V	181.0	0.60	108.6
13	Elevator	43230	480V	43.2	1.00	43.2
14	Telecom System	24000	208V	24.0	1.0	24.0
15	Fire Life Safety Systems	601	120V	0.6	1.0	0.6
16	Site Lighting	5200	277V	5.2	1.0	5.2
			Sub Totals:	799		546
					15% Spare:	82
					6% System Loss:	33
					Total:	661

Supply Transformer Mininum Size, 70% x Total Connected Load: 799 x 0.7 = 560 kVA

Existing Utility Transformer Rating: 750 kVA pad mount transformer

(1) 480Y/277V, 1200 ampere service entrance panel with 1200A MCB

Table of Contents

Volume 1

Section 1 Executive Summary 1

Section 2 Technical Considerations 2

2.1. Analysis Scope of Work 2
2.2. Power System Analysis Methodology 2
2.3. Study Criteria - General Procedure 3
2.4. System Configuration 4
2.5. Power Load Analysis 4
2.6. Power Load-Flow Calculations 5
2.7. Short-Circuit Calculations 6
2.8. Protective Device Coordination Analysis (PDCA) 6
2.9. AC Arc-Flash Analysis 8

Section 3 Appendices 9

3.1. Power System Data 9
3.2. Distribution System Design Configuration, Power One-Line Diagrams 9
3.3. Calculation Model, System Parameters 9
3.4. Power Load-Flow Analysis 9
3.5. Short-Circuit Analysis 9
3.6. Protective Device Coordination Analysis 9
3.7. AC Arc-Flash Analysis 9
3.8. Manufacturer's TCCs and Product Application Information 9

THIS PAGE LEFT INTENTIONALLY BLANK

Section 1 Executive Summary

The power study report is included as part of the design submission package in accordance with FAA Orders and Standards.

A new power distribution system will be constructed to support the DCCA ADM – Warrenton Administrative Building. The electrical design includes following parts:

- Site power service will be constructed by the electrical utility, NOVEC
- Basis of design includes a 750kVA mount transformer located at the exterior of the facility. The voltage classification will be 13.2kV primary to 480Y/277 Volt, 3-phase, 4-wire, 60 Hz secondary.
- The facility main electrical service will be rated 480Y/277V, 1200 amperes.
- Interior electrical distribution will be configured in radial type topology.
- The electrical distribution system includes commercial utility, standby generator, normal power, essential power.
- The entire facility will be provided with standby power from a diesel-engine, generator set located at building exterior

Section 2 Technical Considerations

2.1. Analysis Scope of Work

This report submission complements the 100% design submission. The study outlines the proposed distribution system topology and basis of design for equipment configuration and considerations to ensure properly rated equipment, protection against service fault conditions, selective device coordination, and isolation of the fault conditions can be achieved.

The information provided in this report is for design validation purposes. The calculation model will be updated accordingly in accordance with the project design submission deliverable schedule. The Project specifications requires the Division 26, installation contractor to provide a formal shop drawing submission in accordance with specification section 26 05 73.16, Power Studies, for documentation of the final as-built condition.

The analyses include following parts:

- Power load-flow calculations based on design connected and demand loads
- Short-circuit calculations
- Protective Device Coordination Analysis (PDCA) for significant power paths device coordination.
- Protective device evaluation report
- Preliminary AC Arc Flash analysis calculations.

2.2. Power System Analysis Methodology

Codes and Standards conformance:

1. FAA Orders and Standards
   - FAA-JO-6950.27.A, Power System Analyses: Load Flow Calculations, Short Circuit Analysis, Protective Device Coordination Studies, and Arc Flash Risk Assessment.
   - FAA-C-1217-H, Electrical Work, Premises Wiring, Construction Specification, August 2020 Edition.
2. National Fire Protection Association (NFPA) Codes and Standards
   - NFPA-70, National Electrical Code (NEC), 2020 Edition:
     Article 240-12, Electrical System Coordination
   - NFPA-70E, 2021 Edition: Standard for Electrical Safety in the Workplace
3. Institute of Electrical and Electronics Engineers (IEEE)
   - IEEE Std 141-1993, Recommended Practice for Electric Power Distribution for Industrial Plants
   - ANSI/IEEE Standard 242-2001, Recommended Practice for Protection and Coordination of Industrial and Commercial Power Systems
   - IEEE Std 399-1197, Recommended Practice for Industrial and Commercial Power Systems Analysis
   - IEEE Std 551, Recommended Practice for Calculating Short-Circuit Currents in Industrial and Commercial Power Systems
   - IEEE Std 1584-2018, IEEE Guide for Performing Arc-Flash Hazard Calculations

2.3. Study Criteria - General Procedure

In order to demonstrate intended protection and coordination, while minimizing the number of TCC plots, certain methods and potential operating configurations were selected. The criteria for these selections are as follows:

1. Short Circuit Analysis provides maximum 1/2-cycle peak symmetrical and average short circuit currents available from equipment and operating scenarios.
2. Single failure occurrence criteria apply. Operating configurations resulting from more than one coincidental system failure are not considered.
3. One typical circuit and equipment is shown when several are identical and redundant.
4. When a circuit breaker coordinates at a distribution point, another circuit breaker with a lower trip setting and located on a parallel circuit path will also coordinate.
5. SKM Power Tools software was used to perform Computer Aided Plotting for Time Overcurrent Reporting. The software includes a library for transformer damage curves, power transformer inrush characteristics, and circuit breaker and fuse time current coordination (TCC) curves. SKM's Schneider Electric (Square D) component library was used to match appropriate devices.
6. 13.2kV power distribution equipment basis of design, NOVEC.
7. 408V distribution equipment, Schneider Electric.
8. Basis of design manufacturer's selective coordination data tools for various combination of low voltage circuit breakers:
    - Square D low voltage circuit breakers, Schneider Electric, Data Bulletin 0100DB0501, Short Circuit Selective Coordination for Low Voltage Circuit Breakers, 11/2016.
    - Dry-type Transformer primary and secondary circuit breaker application and selection guide, Schneider Electric, Data Bulletin 0100DB0902, Guide to Low Voltage Transformer Protection and Selective Coordination, R03/16.

2.4. System Configuration

The following summary provides a description of system configuration and load flow operating modes.

2.4.1. Building exterior power distribution system

1. Distribution configuration type
   - Radial with single normal utility power source
   - Standby power generator set
2. Normal utility power source connection point
   - Compartmental pad mount transformer located approximately 255-feet from the facility.
3. Facility secondary (480V) service entrance power feeder
   - From transformer T-UTIL
   - To facility main service entrance switchboard, SEDP-MB
4. Facility standby power feeder
   - From GEN
   - To generator distribution panelboard GDP

2.4.2. Building interior power distribution system

1. Incoming utility main 480V normal power distribution point
   - Main service entrance switchboard, SEDP-MB
2. 480V standby power equipment
   - GEN
   - ATS
3. 480V normal power distribution point
   - Normal distribution panelboard, NDPH
4. 480V essential power distribution point
   - Essential distribution panelboard, EDPH
5. 208V essential power distribution point
   - Essential distribution panelboard, EDPL
6. 480V branch circuit essential panelboards
   - EPH1
5. 208V branch circuit essential panelboards
   - EPL1-1
   - EPL1-2
   - EPL1-3
   - EPL1-4
   - EPL1-5

6. 208V branch circuit normal panelboards
   - NPL1
   - NPL2
   - NPL3
   - NPL4
7. 480V branch circuit normal panelboards
   - NPH1
   - NPH2
   - NPH3
   - NPH4

2.5. Power Load Analysis

The following breakdown provides a description of branch-circuit load calculation requirements organized by load type. Refer to the design submission drawing package panelboard schedules for branch-circuit load calculations.

1. Branch lighting panelboards
   - Branch-circuit connected load plus 1.25 demand factor
   - LED driver load calculated load will be based on the total ampere rating of fixture assembly driver unit.
   - Other branch-circuit power loads per NEC article 220.14
2. Individual and group motor branch-circuit loads
   - Motor-operated loads per NEC article 430
   - Air-conditioning and refrigeration equipment load per NEC article 440
3. Building mechanical large motor load contribution (20HP) breakdown
   - Elevator Cab
4. Power feeder and service load calculation
   - Calculated load per NEC article 220, part III

2.6. Power Load-Flow Calculations

Power load-flow calculations are included in Appendix 3.4. Refer to the design submission drawing package panelboard schedules for panelboard calculated demand power loads. The software calculation model aggregates the demand power loads at system power bus bars.

Analysis objectives include:

1. Power distribution system peak demand load capacity requirement for normal, steady-state, operating conditions.
   - System voltages: building nominal voltages include 120V and 208V.
   - For purposes of establishing uniformity in load calculations, the nominal system voltages will be used in computing branch circuit conductor ampere load. Loads are calculated based on volt-ampere (VA) or kilovolt-ampere (kVA). Where equipment is listed in watts or kilo-watts ratings, such ratings are the equivalent of same rating in VA or kVA basis.
2. Power feeder conductor and conduit sizing requirements.
   - Load-Flow results demonstrate adequate system voltage conditions.

- Conduit raceways will be sized per guidance provided in NEC Informative Annex C, Conduit Tubing Fill Tables for Conductors and Fixture Wires of the Same Size.

3. Power feeder and system voltage drop conditions at system demand load capacity power flow condition.

2.7. Short-Circuit Calculations

Short-Circuit calculations are included in Appendix 3.5.

Analysis objectives include:

1. Selection of equipment and device fault current interrupt and withstand capacity ratings.
2. Determine the magnitude of short-circuit current flow throughout the distribution system at various time intervals after a fault occurs for all power load flow scenarios. Calculations will determine following fault-current conditions:
   - Three-phase bolted-fault
   - Single line-to-ground faults
   - Double line-to-ground faults
   - Line-to-Line faults

2.8. Protective Device Coordination Analysis (PDCA)

PDCA coordination curves and circuit breaker settings summary table is included in Appendix 3.6.

Studies are included for the following circuits:

1. Study 1: Incoming Utility Feeder
   - From T-UTIL
   - To ATS-N-FB
2. Study 2: Generator Power Feeder
   - From GEN
   - To EDPH-MB
3. Study 3: Typical 208V Normal Branch Panel Board
   - From T-NPL4-FB
   - To NPL4-CB
4. Study 4: Typical 480V Normal Branch Panel Board
   - From EDP-MB
   - To NPH3-CB
5. Study 5: Elevator Motor Feeder
   - From SEDP-MB
   - To ELEVATOR
6. Study 6: Typical 480V Essential Branch Panel Board
   - From EDPH-MB
   - To EPH2-CB
7. Study 7: Essential Distribution Panel Board

- From EDPH-MB
- To EDPL-MB

8. Study 8: Typical 208V Essential Branch Panel Board
   - From EDPL-MB
   - To EPL1-5-CB

2.8.1. General Circuit Breaker Applications

The following design considerations are used to determine distribution system levels of selective coordination:

1. Main circuit breakers (MB): Used for switching, servicing, and protecting the main bus of switchboards or panelboards. For main service entrance equipment, the service disconnecting means will be applied according to NEC requirements. When the circuit breaker is located at the secondary of a step-down transformer, the device serves as the transformer secondary main circuit breaker applied according to NEC requirements.
2. Isolation breakers (IB): Used for servicing and maintenance isolation of equipment. Provides protection of equipment when connected to power source.
3. Tie-breakers (TB): Used for sectionalizing or isolating a section of bus and to allow for maintenance isolation and servicing of equipment. Provides protection of equipment bus when connected to power source.
4. Feeder circuit breakers: Provides protection for feeder conductors and connected equipment.
5. Maintenance Bypass Breakers: Used for servicing and maintenance isolation of equipment. Provides protection of equipment when connected to power source.
6. Studies will examine the overcurrent protection devices specified in the distribution system in order to determine proper trip settings that will allow devices to operate properly to isolate short circuit currents, limit component damage and to maintain continuity of electrical service to the remainder of the power system. Devices located closest to the fault should operate quickly while shutting down the smallest portion of the system possible. The overcurrent protection devices must also act in time to prevent damage to cables, transformers and other power distribution equipment that may be subject to high fault currents. The study focuses on the worst-case circuit paths, typically locations where common distribution equipment is subjected to the highest available short circuit current.
7. Protection devices that utilize electromechanical tripping operators will typically have a wide operating region with limited or no adjustable time current characteristics are difficult to coordinate selectively with other devices. In many cases selective coordination in the instantaneous region is not possible. For the purposes of the results listed below, “good coordination” signifies that there is no overlap of characteristics in the short and long-time regions, or the regions that would be affected by overload. The term “perfect coordination” shall refer to a condition where there is no overlap in any region of the curves, including the instantaneous characteristics. In general, it will be necessary to use solid-state devices to achieve perfect coordination.
8. Circuit breakers connected in series along the same power feeder generally do not need to coordinate selectively, since operation of either device causes the same power outage. Similarly, transformer primary and secondary circuit breakers are not required to coordinate selectively. Potential lack of coordination between transformer primary and secondary protection devices is acknowledged in ANSI/IEEE Standard 242-2001, “Buff Book”. This standard recommends giving priority to protecting the transformer primary such that the protection device will not trip under inrush or full load conditions and operate below the mechanical damage threshold. Transformer primary protective devices shall be set to avoid opening under transformer energization (inrush). Secondary protective devices shall be set to protect transformers against over-currents (down-stream overloads and faults).

9. Overlapping Time Current Curves (TCC graphical data) for panel breaker-to-breaker pairing combinations: When there is no overlap (at any point) of the TCC graphs below the available short-circuit current at the downstream panel, the circuit breakers are fully coordinated. When there is overlap in the short-circuit zone manufacturer performance test data, Square D data bulletin 01000DB0501, Short Circuit Selective Coordination for Low Voltage Circuit Breakers, will be used for determining levels of selective coordination between breaker-to-breaker pairings.

2.9. AC Arc-Flash Analysis

Arc flash calculations are included in Appendix 3.7.

Analysis objectives include:

1. Determine the arcing current and arc flash incident energy levels at distribution equipment power bus bars.
2. The results are preliminary for information to complement the project's design phase power system calculation submission requirements. The final system arc flash analysis and equipment warning labeling creation is to be performed by the division 26 installation contractor in accordance with specification section 26 05 73.16, Coordinated Power Systems, shop drawing submission requirements.

Section 3 Appendices

3.1. Power System Data

1. Facility Short Circuit Information
2. Generator Short-Circuit Information

3.2. Distribution System Design Configuration, Power One-Line Diagrams

3.3. Calculation Model, System Parameters

3.4. Power Load-Flow Analysis

3.5. Short-Circuit Analysis

3.6. Protective Device Coordination Analysis

3.7. AC Arc-Flash Analysis

3.8. Manufacturer's TCCs and Product Application Information

Appendix 3.1

Power System Data

1. Facility Short Circuit Information

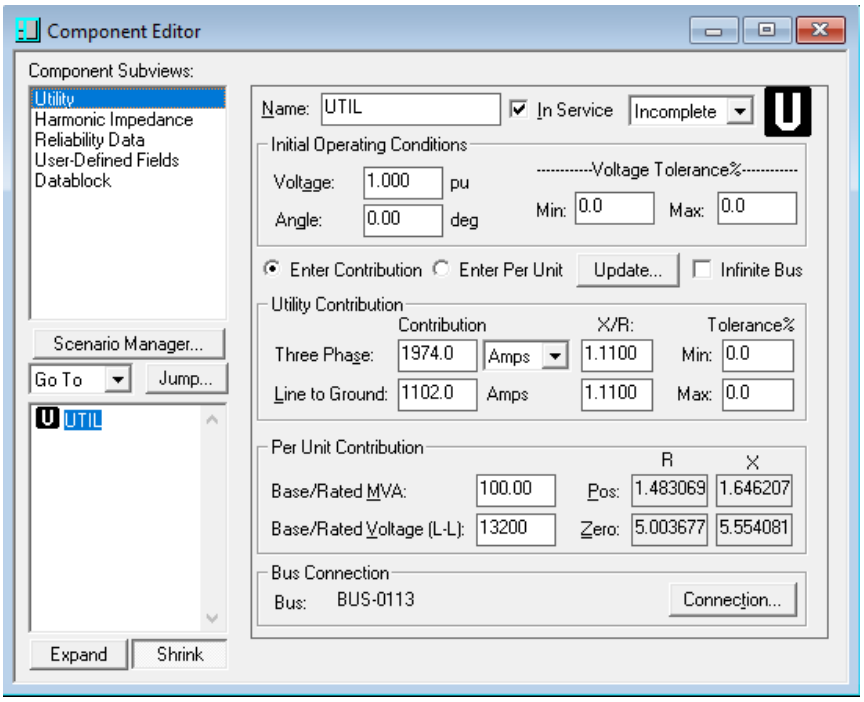

2. Generator Short Circuit Information

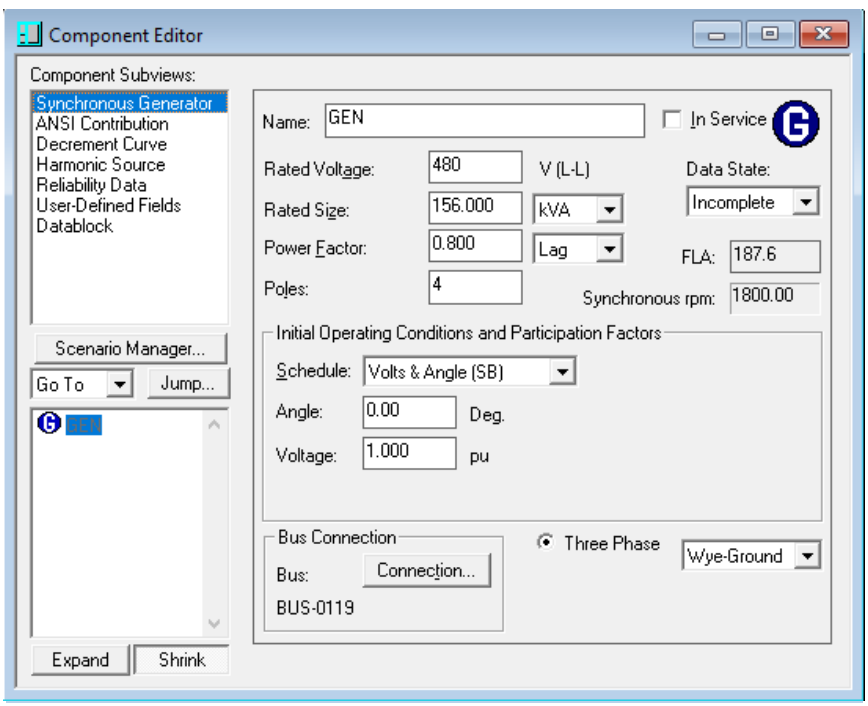

Appendix 3.2

Distribution System Design Configuration, Power One-Line Diagrams

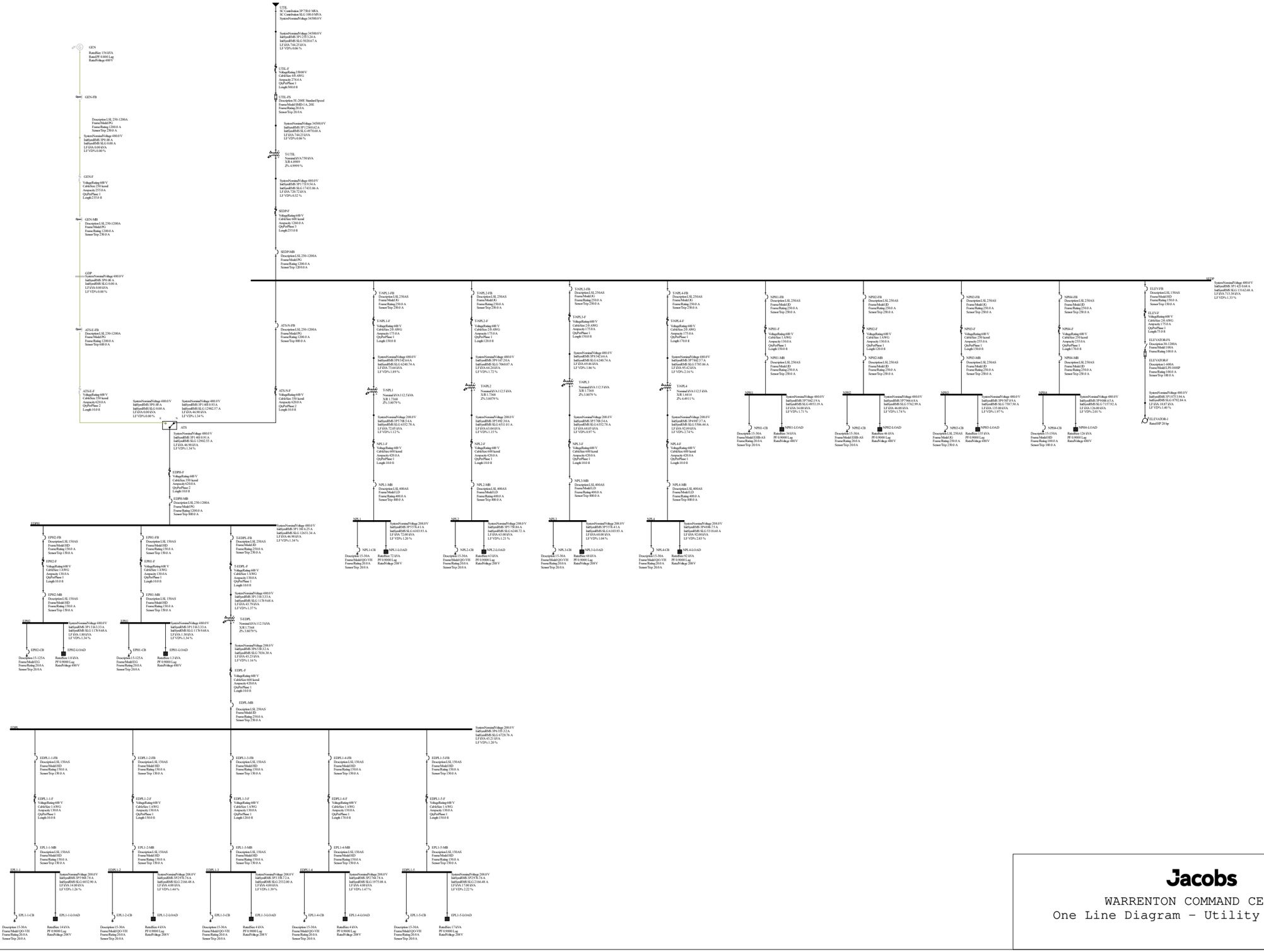

Jacobs

WARRENTON COMMAND CENTER

One Line Diagram – Utility Power Path

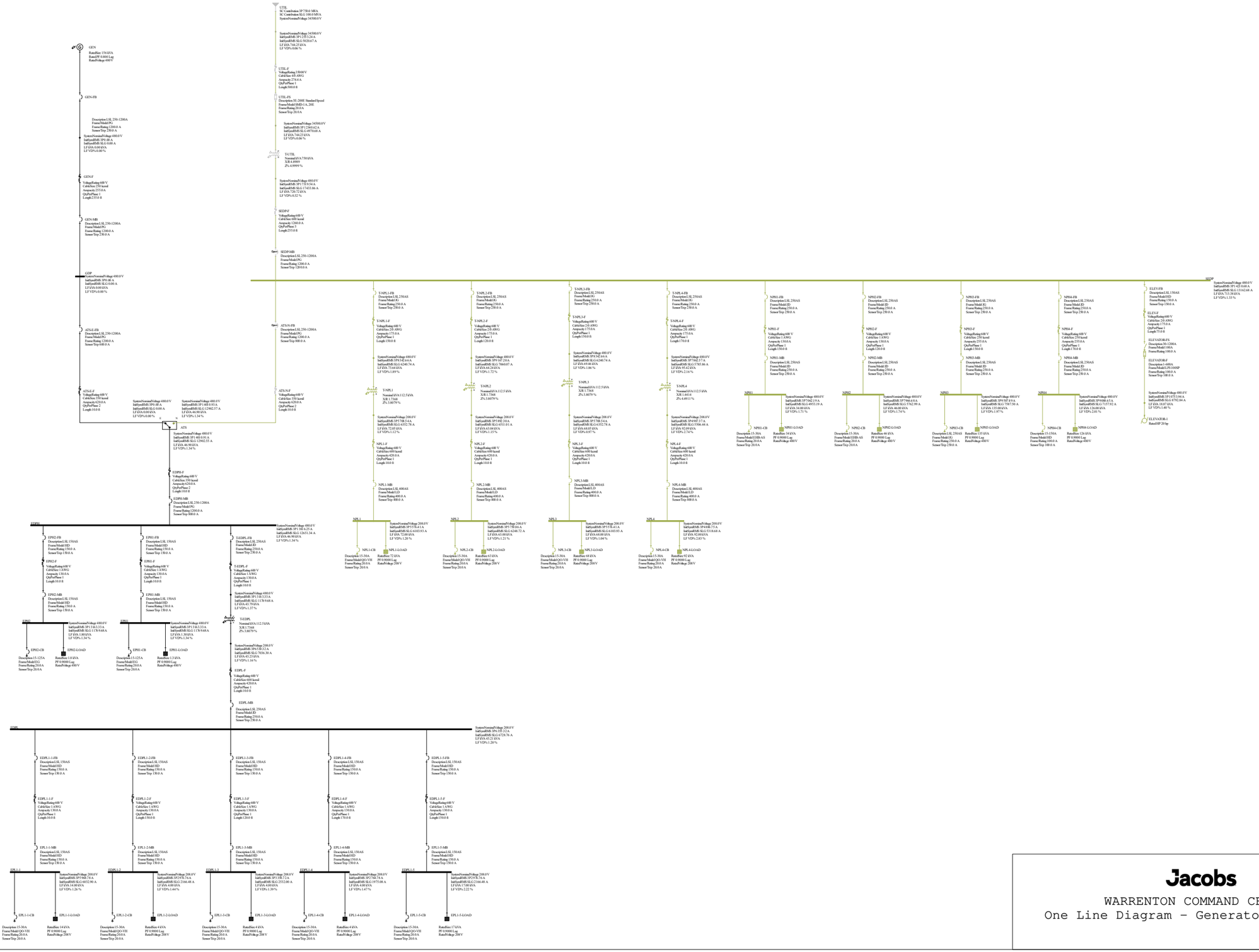

Jacobs

WARRENTON COMMAND CENTER

One Line Diagram – Generator Power Path

Appendix 3.3

Calculation Model, System Parameters

Component	Field	Base Project		Component	Field	Base Project
ATS-E-FB	Name	ATS-E-FB		ATS-N-FB	Name	ATS-N-FB
	Manufacturer	SQUARE D			Manufacturer	SQUARE D
	Type	Powerpact P-Frame, 5.0 & 6.0 A/P/H			Type	Powerpact P-Frame, 5.0 & 6.0 A/P/H
	Description	LSI, 250-1200A			Description	LSI, 250-1200A
	Frame/Rating (A)	1200.00			Frame/Rating (A)	1200.00
	Sensor/Trip (A)	600.00			Sensor/Trip (A)	800.00
	Setting_LTPU	0.4 (240A)			Setting_LTPU	0.625 (500A)
	Setting_LTD	0.5			Setting_LTD	0.5
	Setting_STPU	1.5 (360A)			Setting_STPU	8 (4000A)
	Setting_STD	0.1 (I^s T Off)			Setting_STD	INST (I^s T Off)
	Setting_INST	2 (1200A) OR Fixed (26000A)			Setting_INST	6 (4800A) OR Fixed (26000A)
EDPH-MB	Name	EDPH-MB		EDPL-MB	Name	EDPL-MB
	Manufacturer	SQUARE D			Manufacturer	SQUARE D
	Type	Powerpact P-Frame, 5.0 & 6.0 A/P/H			Type	Powerpact J Frame, 5.2A/E & 6.2A/E
	Description	LSI, 250-1200A			Description	LSI, 250AS
	Frame/Rating (A)	1200.00			Frame/Rating (A)	250.00
	Sensor/Trip (A)	800.00			Sensor/Trip (A)	250.00
	Setting_LTPU	0.5 (400A)			Setting_LTPU	175 (175A)
	Setting_LTD	0.5			Setting_LTD	0.5
	Setting_STPU	3 (1200A)			Setting_STPU	2.5 (437.5A)
	Setting_STD	0.4 (I^s T Off)			Setting_STD	0.3 (I^s T Off)
	Setting_INST	6 (4800A) OR Fixed (26000A)			Setting_INST	4 (1000A) OR Fixed (3062A)
EDPL1-1-FB	Name	EDPL1-1-FB		EDPL1-2-FB	Name	EDPL1-2-FB
	Manufacturer	SQUARE D			Manufacturer	SQUARE D
	Type	Powerpact H-Frame, 5.2A/E & 6.2A/E			Type	Powerpact H-Frame, 5.2A/E & 6.2A/E
	Description	LSI, 150AS			Description	LSI, 150AS
	Frame/Rating (A)	150.00			Frame/Rating (A)	150.00
	Sensor/Trip (A)	150.00			Sensor/Trip (A)	150.00
	Setting_LTPU	125 (125A)			Setting_LTPU	125 (125A)
	Setting_LTD	0.5			Setting_LTD	0.5
	Setting_STPU	2 (250A)			Setting_STPU	2 (250A)
	Setting_STD	0.1 (I^s T Off)			Setting_STD	0.1 (I^s T Off)
	Setting_INST	6 (900A) OR Fixed (2277A)			Setting_INST	6 (900A) OR Fixed (2277A)
EDPL1-3-FB	Name	EDPL1-3-FB		EDPL1-4-FB	Name	EDPL1-4-FB
	Manufacturer	SQUARE D			Manufacturer	SQUARE D
	Type	Powerpact H-Frame, 5.2A/E & 6.2A/E			Type	Powerpact H-Frame, 5.2A/E & 6.2A/E
	Description	LSI, 150AS			Description	LSI, 150AS
	Frame/Rating (A)	150.00			Frame/Rating (A)	150.00
	Sensor/Trip (A)	150.00			Sensor/Trip (A)	150.00
	Setting_LTPU	125 (125A)			Setting_LTPU	125 (125A)
	Setting_LTD	0.5			Setting_LTD	0.5
	Setting_STPU	2 (250A)			Setting_STPU	2 (250A)
	Setting_STD	0.1 (I^s T Off)			Setting_STD	0.1 (I^s T Off)
	Setting_INST	6 (900A) OR Fixed (2277A)			Setting_INST	6 (900A) OR Fixed (2277A)
EDPL1-5-FB	Name	EDPL1-5-FB		ELEV-FB	Name	ELEV-FB
	Manufacturer	SQUARE D			Manufacturer	SQUARE D
	Type	Powerpact H-Frame, 5.2A/E & 6.2A/E			Type	Powerpact H-Frame, 5.2A/E & 6.2A/E
	Description	LSI, 150AS			Description	LSI, 150AS
	Frame/Rating (A)	150.00			Frame/Rating (A)	150.00
	Sensor/Trip (A)	150.00			Sensor/Trip (A)	150.00
	Setting_LTPU	125 (125A)			Setting_LTPU	150 (150A)
	Setting_LTD	0.5			Setting_LTD	0.5
	Setting_STPU	2 (250A)			Setting_STPU	1.5 (225A)
	Setting_STD	0.1 (I^s T Off)			Setting_STD	0.0 (I^s T Off)
	Setting_INST	6 (900A) OR Fixed (2277A)			Setting_INST	12 (1800A) OR Fixed (2277A)
ELEVATOR-F	Name	ELEVATOR-F		ELEVATOR-FS	Name	ELEVATOR-FS
	Manufacturer	BUSSMANN			Manufacturer	UL 98
	Type	LPJ, 600V Class J			Type	Fused DS
	Description	1-600A			Description	30-1200A
	Frame/Rating (A)	100.00			Frame/Rating (A)	100.00
	Sensor/Trip (A)	100.00			Sensor/Trip (A)	
	Setting_LTPU				Setting_LTPU	
	Setting_LTD				Setting_LTD	
	Setting_STPU				Setting_STPU	
	Setting_STD				Setting_STD	
	Setting_INST				Setting_INST	

Component	Field	Base Project		Component	Field	Base Project
EPH1-CB	Name	EPH1-CB		EPH1-FB	Name	EPH1-FB
	Manufacturer	SQUARE D			Manufacturer	SQUARE D
	Type	EG			Type	Powerpact H-Frame, 5.2A/E & 6.2A/E
	Description	15-125A			Description	LSI, 150AS
	Frame/Rating (A)	20.00			Frame/Rating (A)	150.00
	Sensor/Trip (A)	20.00			Sensor/Trip (A)	150.00
	Setting_LTPU				Setting_LTPU	125 (125A)
	Setting_LTD				Setting_LTD	0.5
	Setting_STPU				Setting_STPU	5 (625A)
	Setting_STD				Setting_STD	0.3 (I^s T Off)
	Setting_INST				Setting_INST	2 (300A) OR Fixed (2277A)
EPH1-MB	Name	EPH1-MB		EPH2-CB	Name	EPH2-CB
	Manufacturer	SQUARE D			Manufacturer	SQUARE D
	Type	Powerpact H-Frame, 5.2A/E & 6.2A/E			Type	EG
	Description	LSI, 150AS			Description	15-125A
	Frame/Rating (A)	150.00			Frame/Rating (A)	20.00
	Sensor/Trip (A)	150.00			Sensor/Trip (A)	20.00
	Setting_LTPU	125 (125A)			Setting_LTPU	
	Setting_LTD	0.5			Setting_LTD	
	Setting_STPU	5 (625A)			Setting_STPU	
	Setting_STD	0.3 (I^s T Off)			Setting_STD	
	Setting_INST	2 (300A) OR Fixed (2277A)			Setting_INST	
EPH2-FB	Name	EPH2-FB		EPH2-MB	Name	EPH2-MB
	Manufacturer	SQUARE D			Manufacturer	SQUARE D
	Type	Powerpact H-Frame, 5.2A/E & 6.2A/E			Type	Powerpact H-Frame, 5.2A/E & 6.2A/E
	Description	LSI, 150AS			Description	LSI, 150AS
	Frame/Rating (A)	150.00			Frame/Rating (A)	150.00
	Sensor/Trip (A)	150.00			Sensor/Trip (A)	150.00
	Setting_LTPU	125 (125A)			Setting_LTPU	125 (125A)
	Setting_LTD	0.5			Setting_LTD	0.5
	Setting_STPU	5 (625A)			Setting_STPU	5 (625A)
	Setting_STD	0.3 (I^s T Off)			Setting_STD	0.3 (I^s T Off)
	Setting_INST	5.5 (825A) OR Fixed (2277A)			Setting_INST	5.5 (825A) OR Fixed (2277A)
EPL1-1-CB	Name	EPL1-1-CB		EPL1-1-MB	Name	EPL1-1-MB
	Manufacturer	SQUARE D			Manufacturer	SQUARE D
	Type	QO-VH, 1-Pole			Type	Powerpact H-Frame, 5.2A/E & 6.2A/E
	Description	15-30A			Description	LSI, 150AS
	Frame/Rating (A)	20.00			Frame/Rating (A)	150.00
	Sensor/Trip (A)	20.00			Sensor/Trip (A)	150.00
	Setting_LTPU				Setting_LTPU	125 (125A)
	Setting_LTD				Setting_LTD	0.5
	Setting_STPU				Setting_STPU	2 (250A)
	Setting_STD				Setting_STD	0.1 (I^s T Off)
	Setting_INST				Setting_INST	6 (900A) OR Fixed (2277A)
EPL1-2-CB	Name	EPL1-2-CB		EPL1-2-MB	Name	EPL1-2-MB
	Manufacturer	SQUARE D			Manufacturer	SQUARE D
	Type	QO-VH, 1-Pole			Type	Powerpact H-Frame, 5.2A/E & 6.2A/E
	Description	15-30A			Description	LSI, 150AS
	Frame/Rating (A)	20.00			Frame/Rating (A)	150.00
	Sensor/Trip (A)	20.00			Sensor/Trip (A)	150.00
	Setting_LTPU				Setting_LTPU	125 (125A)
	Setting_LTD				Setting_LTD	0.5
	Setting_STPU				Setting_STPU	2 (250A)
	Setting_STD				Setting_STD	0.1 (I^s T Off)
	Setting_INST				Setting_INST	6 (900A) OR Fixed (2277A)
EPL1-3-CB	Name	EPL1-3-CB		EPL1-3-MB	Name	EPL1-3-MB
	Manufacturer	SQUARE D			Manufacturer	SQUARE D
	Type	QO-VH, 1-Pole			Type	Powerpact H-Frame, 5.2A/E & 6.2A/E
	Description	15-30A			Description	LSI, 150AS
	Frame/Rating (A)	20.00			Frame/Rating (A)	150.00
	Sensor/Trip (A)	20.00			Sensor/Trip (A)	150.00
	Setting_LTPU				Setting_LTPU	125 (125A)
	Setting_LTD				Setting_LTD	0.5
	Setting_STPU				Setting_STPU	2 (250A)
	Setting_STD				Setting_STD	0.1 (I^s T Off)
	Setting_INST				Setting_INST	6 (900A) OR Fixed (2277A)

Component	Field	Base Project		Component	Field	Base Project
EPL1-4-CB	Name	EPL1-4-CB		EPL1-4-MB	Name	EPL1-4-MB
	Manufacturer	SQUARE D			Manufacturer	SQUARE D
	Type	QO-VH, 1-Pole			Type	Powerpact H-Frame, 5.2A/E & 6.2A/E
	Description	15-30A			Description	LSI, 150AS
	Frame/Rating (A)	20.00			Frame/Rating (A)	150.00
	Sensor/Trip (A)	20.00			Sensor/Trip (A)	150.00
	Setting_LTPU				Setting_LTPU	125 (125A)
	Setting_LTD				Setting_LTD	0.5
	Setting_STPU				Setting_STPU	2 (250A)
	Setting_STD				Setting_STD	0.1 (I^s T Off)
	Setting_INST				Setting_INST	6 (900A) OR Fixed (2277A)
EPL1-5-CB	Name	EPL1-5-CB		EPL1-5-MB	Name	EPL1-5-MB
	Manufacturer	SQUARE D			Manufacturer	SQUARE D
	Type	QO-VH, 1-Pole			Type	Powerpact H-Frame, 5.2A/E & 6.2A/E
	Description	15-30A			Description	LSI, 150AS
	Frame/Rating (A)	20.00			Frame/Rating (A)	150.00
	Sensor/Trip (A)	20.00			Sensor/Trip (A)	150.00
	Setting_LTPU				Setting_LTPU	125 (125A)
	Setting_LTD				Setting_LTD	0.5
	Setting_STPU				Setting_STPU	2 (250A)
	Setting_STD				Setting_STD	0.1 (I^s T Off)
	Setting_INST				Setting_INST	6 (900A) OR Fixed (2277A)
GEN-FB	Name	GEN-FB		GEN-MB	Name	GEN-MB
	Manufacturer	SQUARE D			Manufacturer	SQUARE D
	Type	Powerpact P-Frame, 5.0 & 6.0 A/P/H			Type	Powerpact P-Frame, 5.0 & 6.0 A/P/H
	Description	LSI, 250-1200A			Description	LSI, 250-1200A
	Frame/Rating (A)	1200.00			Frame/Rating (A)	1200.00
	Sensor/Trip (A)	250.00			Sensor/Trip (A)	250.00
	Setting_LTPU	0.4 (100A)			Setting_LTPU	0.4 (100A)
	Setting_LTD	0.5			Setting_LTD	0.5
	Setting_STPU	1.5 (150A)			Setting_STPU	1.5 (150A)
	Setting_STD	0.1 (I^s T Off)			Setting_STD	0.1 (I^s T Off)
	Setting_INST	2 (500A) OR Fixed (26000A)			Setting_INST	2 (500A) OR Fixed (26000A)
NPH1-CB	Name	NPH1-CB		NPH1-FB	Name	NPH1-FB
	Manufacturer	SQUARE D			Manufacturer	SQUARE D
	Type	EHB-AS			Type	Powerpact J Frame, 5.2A/E & 6.2A/E
	Description	15-30A			Description	LSI, 250AS
	Frame/Rating (A)	20.00			Frame/Rating (A)	250.00
	Sensor/Trip (A)	20.00			Sensor/Trip (A)	250.00
	Setting_LTPU				Setting_LTPU	225 (225A)
	Setting_LTD				Setting_LTD	0.5
	Setting_STPU				Setting_STPU	1.5 (337.5A)
	Setting_STD				Setting_STD	0.0 (I^s T Off)
	Setting_INST				Setting_INST	12 (3000A) OR Fixed (3062A)
NPH1-MB	Name	NPH1-MB		NPH2-CB	Name	NPH2-CB
	Manufacturer	SQUARE D			Manufacturer	SQUARE D
	Type	Powerpact J Frame, 5.2A/E & 6.2A/E			Type	EHB-AS
	Description	LSI, 250AS			Description	15-30A
	Frame/Rating (A)	250.00			Frame/Rating (A)	20.00
	Sensor/Trip (A)	250.00			Sensor/Trip (A)	20.00
	Setting_LTPU	225 (225A)			Setting_LTPU	
	Setting_LTD	0.5			Setting_LTD	
	Setting_STPU	1.5 (337.5A)			Setting_STPU	
	Setting_STD	0.0 (I^s T Off)			Setting_STD	
	Setting_INST	12 (3000A) OR Fixed (3062A)			Setting_INST	
NPH2-FB	Name	NPH2-FB		NPH2-MB	Name	NPH2-MB
	Manufacturer	SQUARE D			Manufacturer	SQUARE D
	Type	Powerpact J Frame, 5.2A/E & 6.2A/E			Type	Powerpact J Frame, 5.2A/E & 6.2A/E
	Description	LSI, 250AS			Description	LSI, 250AS
	Frame/Rating (A)	250.00			Frame/Rating (A)	250.00
	Sensor/Trip (A)	250.00			Sensor/Trip (A)	250.00
	Setting_LTPU	225 (225A)			Setting_LTPU	225 (225A)
	Setting_LTD	0.5			Setting_LTD	0.5
	Setting_STPU	1.5 (337.5A)			Setting_STPU	1.5 (337.5A)
	Setting_STD	0.0 (I^s T Off)			Setting_STD	0.0 (I^s T Off)
	Setting_INST	12 (3000A) OR Fixed (3062A)			Setting_INST	12 (3000A) OR Fixed (3062A)

Component	Field	Base Project		Component	Field	Base Project
NPH3-CB	Name	NPH3-CB		NPH3-FB	Name	NPH3-FB
	Manufacturer	SQUARE D			Manufacturer	SQUARE D
	Type	Powerpact J Frame, 5.2A/E & 6.2A/E			Type	Powerpact J Frame, 5.2A/E & 6.2A/E
	Description	LSI, 250AS			Description	LSI, 250AS
	Frame/Rating (A)	250.00			Frame/Rating (A)	250.00
	Sensor/Trip (A)	250.00			Sensor/Trip (A)	250.00
	Setting_LTPU	125 (125A)			Setting_LTPU	225 (225A)
	Setting_LTD	0.5			Setting_LTD	0.5
	Setting_STPU	1.5 (187.5A)			Setting_STPU	1.5 (337.5A)
	Setting_STD	0.0 (I^s T Off)			Setting_STD	0.0 (I^s T Off)
	Setting_INST	1.5 (375A) OR Fixed (3062A)			Setting_INST	12 (3000A) OR Fixed (3062A)
NPH3-MB	Name	NPH3-MB		NPH4-CB	Name	NPH4-CB
	Manufacturer	SQUARE D			Manufacturer	SQUARE D
	Type	Powerpact J Frame, 5.2A/E & 6.2A/E			Type	Powerpact HD
	Description	LSI, 250AS			Description	15-150A
	Frame/Rating (A)	250.00			Frame/Rating (A)	100.00
	Sensor/Trip (A)	250.00			Sensor/Trip (A)	100.00
	Setting_LTPU	225 (225A)			Setting_LTPU	
	Setting_LTD	0.5			Setting_LTD	
	Setting_STPU	1.5 (337.5A)			Setting_STPU	
	Setting_STD	0.0 (I^s T Off)			Setting_STD	
	Setting_INST	12 (3000A) OR Fixed (3062A)			Setting_INST	
NPH4-FB	Name	NPH4-FB		NPH4-MB	Name	NPH4-MB
	Manufacturer	SQUARE D			Manufacturer	SQUARE D
	Type	Powerpact J Frame, 5.2A/E & 6.2A/E			Type	Powerpact J Frame, 5.2A/E & 6.2A/E
	Description	LSI, 250AS			Description	LSI, 250AS
	Frame/Rating (A)	250.00			Frame/Rating (A)	250.00
	Sensor/Trip (A)	250.00			Sensor/Trip (A)	250.00
	Setting_LTPU	225 (225A)			Setting_LTPU	225 (225A)
	Setting_LTD	0.5			Setting_LTD	0.5
	Setting_STPU	1.5 (337.5A)			Setting_STPU	1.5 (337.5A)
	Setting_STD	0.0 (I^s T Off)			Setting_STD	0.0 (I^s T Off)
	Setting_INST	12 (3000A) OR Fixed (3062A)			Setting_INST	12 (3000A) OR Fixed (3062A)
NPL1-CB	Name	NPL1-CB		NPL1-MB	Name	NPL1-MB
	Manufacturer	SQUARE D			Manufacturer	SQUARE D
	Type	QO-VH, 1-Pole			Type	Powerpact L-Frame, 5.3A/E & 6.3A/E
	Description	15-30A			Description	LSI, 400AS
	Frame/Rating (A)	20.00			Frame/Rating (A)	400.00
	Sensor/Trip (A)	20.00			Sensor/Trip (A)	400.00
	Setting_LTPU				Setting_LTPU	400 (400A)
	Setting_LTD				Setting_LTD	0.5
	Setting_STPU				Setting_STPU	1.5 (600A)
	Setting_STD				Setting_STD	0.0 (I^s T Off)
	Setting_INST				Setting_INST	12 (4800A) OR Fixed (4914A)
NPL2-CB	Name	NPL2-CB		NPL2-MB	Name	NPL2-MB
	Manufacturer	SQUARE D			Manufacturer	SQUARE D
	Type	QO-VH, 1-Pole			Type	Powerpact L-Frame, 5.3A/E & 6.3A/E
	Description	15-30A			Description	LSI, 400AS
	Frame/Rating (A)	20.00			Frame/Rating (A)	400.00
	Sensor/Trip (A)	20.00			Sensor/Trip (A)	400.00
	Setting_LTPU				Setting_LTPU	400 (400A)
	Setting_LTD				Setting_LTD	0.5
	Setting_STPU				Setting_STPU	1.5 (600A)
	Setting_STD				Setting_STD	0.0 (I^s T Off)
	Setting_INST				Setting_INST	12 (4800A) OR Fixed (4914A)
NPL3-CB	Name	NPL3-CB		NPL3-MB	Name	NPL3-MB
	Manufacturer	SQUARE D			Manufacturer	SQUARE D
	Type	QO-VH, 1-Pole			Type	Powerpact L-Frame, 5.3A/E & 6.3A/E
	Description	15-30A			Description	LSI, 400AS
	Frame/Rating (A)	20.00			Frame/Rating (A)	400.00
	Sensor/Trip (A)	20.00			Sensor/Trip (A)	400.00
	Setting_LTPU				Setting_LTPU	400 (400A)
	Setting_LTD				Setting_LTD	0.5
	Setting_STPU				Setting_STPU	1.5 (600A)
	Setting_STD				Setting_STD	0.0 (I^s T Off)
	Setting_INST				Setting_INST	12 (4800A) OR Fixed (4914A)

Component	Field	Base Project		Component	Field	Base Project
	Manufacturer	SQUARE D			Manufacturer	SQUARE D
	Type	QO-VH, 1-Pole			Type	Powerpact L-Frame, 5.3A/E & 6.3A/E
	Description	15-30A			Description	LSI, 400AS
	Frame/Rating (A)	20.00			Frame/Rating (A)	400.00
	Sensor/Trip (A)	20.00			Sensor/Trip (A)	400.00
	Setting_LTPU				Setting_LTPU	400 (400A)
	Setting_LTD				Setting_LTD	0.5
	Setting_STPU				Setting_STPU	1.5 (600A)
	Setting_STD				Setting_STD	0.0 (I^s T Off)
	Setting_INST				Setting_INST	12 (4800A) OR Fixed (4914A)
SEDP-MB	Name	SEDP-MB		T-EDPL-FB	Name	T-EDPL-FB
	Manufacturer	SQUARE D			Manufacturer	SQUARE D
	Type	Powerpact P-Frame, 5.0 & 6.0 A/P/H			Type	Powerpact J Frame, 5.2A/E & 6.2A/E
	Description	LSI, 250-1200A			Description	LSI, 250AS
	Frame/Rating (A)	1200.00			Frame/Rating (A)	250.00
	Sensor/Trip (A)	1200.00			Sensor/Trip (A)	250.00
	Setting_LTPU	0.8 (960A)			Setting_LTPU	175 (175A)
	Setting_LTD	1			Setting_LTD	0.5
	Setting_STPU	6 (5760A)			Setting_STPU	3 (525A)
	Setting_STD	0.1 (I^s T Off)			Setting_STD	0.3 (I^s T Off)
	Setting_INST	OFF OR Fixed (26000A)			Setting_INST	4 (1000A) OR Fixed (3062A)
T-NPL1-FB	Name	T-NPL1-FB		T-NPL2-FB	Name	T-NPL2-FB
	Manufacturer	SQUARE D			Manufacturer	SQUARE D
	Type	Powerpact J Frame, 5.2A/E & 6.2A/E			Type	Powerpact J Frame, 5.2A/E & 6.2A/E
	Description	LSI, 250AS			Description	LSI, 250AS
	Frame/Rating (A)	250.00			Frame/Rating (A)	250.00
	Sensor/Trip (A)	250.00			Sensor/Trip (A)	250.00
	Setting_LTPU	175 (175A)			Setting_LTPU	175 (175A)
	Setting_LTD	1			Setting_LTD	1
	Setting_STPU	2 (350A)			Setting_STPU	2 (350A)
	Setting_STD	0.2 (I^s T Off)			Setting_STD	0.2 (I^s T Off)
	Setting_INST	12 (3000A) OR Fixed (3062A)			Setting_INST	12 (3000A) OR Fixed (3062A)
T-NPL3-FB	Name	T-NPL3-FB		T-NPL4-FB	Name	T-NPL4-FB
	Manufacturer	SQUARE D			Manufacturer	SQUARE D
	Type	Powerpact J Frame, 5.2A/E & 6.2A/E			Type	Powerpact J Frame, 5.2A/E & 6.2A/E
	Description	LSI, 250AS			Description	LSI, 250AS
	Frame/Rating (A)	250.00			Frame/Rating (A)	250.00
	Sensor/Trip (A)	250.00			Sensor/Trip (A)	250.00
	Setting_LTPU	175 (175A)			Setting_LTPU	175 (175A)
	Setting_LTD	1			Setting_LTD	1
	Setting_STPU	2 (350A)			Setting_STPU	3.5 (612.5A)
	Setting_STD	0.2 (I^s T Off)			Setting_STD	0.2 (I^s T Off)
	Setting_INST	12 (3000A) OR Fixed (3062A)			Setting_INST	12 (3000A) OR Fixed (3062A)
UTIL-FS	Name	UTIL-FS				
	Manufacturer	S&C				
	Type	SM-5, 14.4kV E-Rated				
	Description	3E- 2-400E Standard Speed				
	Frame/Rating (A)	50.00				
	Sensor/Trip (A)	50.00				
	Setting_LTPU					
	Setting_LTD					
	Setting_STPU					
	Setting_STD					
	Setting_INST					

Component	Field	Base Project		Component	Field	Base Project
EDPH	Voltage Rating (V)	480		EDPL	Voltage Rating (V)	240
	EquipmentCategory	LV Panelboard			EquipmentCategory	LV Panelboard
	Manufacturer	SQUARE D			Manufacturer	SQUARE D
	BusLibType	I-LINE CLASS 2110			BusLibType	I-LINE CLASS 2110
	BusLibDesc	800A			BusLibDesc	400A
	RatingDescription	800A 480V 800.0A 35.0kA 4.899			RatingDescription	400A 240V 400.0A 35.0kA 4.899
	X/R Pos	2.59			X/R Pos	1.85
EDPL1-2	Voltage Rating (V)	240		EDPL1-3	Voltage Rating (V)	240
	EquipmentCategory	LV Panelboard			EquipmentCategory	LV Panelboard
	Manufacturer	SQUARE D			Manufacturer	SQUARE D
	BusLibType	NQOD CLASS 1630			BusLibType	NQOD CLASS 1630
	BusLibDesc	100-600A			BusLibDesc	100-600A
	RatingDescription	250A 240V 250.0A 25.0kA 4.899			RatingDescription	250A 240V 250.0A 25.0kA 4.899
	X/R Pos	0.79			X/R Pos	0.86
EDPL1-4	Voltage Rating (V)	240		EDPL1-5	Voltage Rating (V)	240
	EquipmentCategory	LV Panelboard			EquipmentCategory	LV Panelboard
	Manufacturer	SQUARE D			Manufacturer	SQUARE D
	BusLibType	NQOD CLASS 1630			BusLibType	NQOD CLASS 1630
	BusLibDesc	100-600A			BusLibDesc	100-600A
	RatingDescription	250A 240V 250.0A 25.0kA 4.899			RatingDescription	250A 240V 250.0A 25.0kA 4.899
	X/R Pos	0.75			X/R Pos	0.79
EPH1	Voltage Rating (V)	480		EPH2	Voltage Rating (V)	480
	EquipmentCategory	LV Panelboard			EquipmentCategory	LV Panelboard
	Manufacturer	SQUARE D			Manufacturer	SQUARE D
	BusLibType	NF CLASS 1670			BusLibType	NF CLASS 1670
	BusLibDesc	100-600A			BusLibDesc	100-600A
	RatingDescription	125A 480V 125.0A 35.0kA 4.899			RatingDescription	125A 480V 125.0A 35.0kA 4.899
	X/R Pos	2.25			X/R Pos	2.25
EPL1-1	Voltage Rating (V)	240		GDP	Voltage Rating (V)	480
	EquipmentCategory	LV Panelboard			EquipmentCategory	LV Panelboard
	Manufacturer	SQUARE D			Manufacturer	SQUARE D
	BusLibType	NQOD CLASS 1630			BusLibType	I-LINE CLASS 2110
	BusLibDesc	100-600A			BusLibDesc	800A
	RatingDescription	250A 240V 250.0A 25.0kA 4.899			RatingDescription	800A 480V 800.0A 35.0kA 4.899
	X/R Pos	1.64			X/R Pos	0.00
NPH1	Voltage Rating (V)	480		NPH2	Voltage Rating (V)	480
	EquipmentCategory	LV Panelboard			EquipmentCategory	LV Panelboard
	Manufacturer	SQUARE D			Manufacturer	SQUARE D
	BusLibType	NF CLASS 1670			BusLibType	NF CLASS 1670
	BusLibDesc	100-600A			BusLibDesc	100-600A
	RatingDescription	250A 480V 250.0A 35.0kA 4.899			RatingDescription	250A 480V 250.0A 35.0kA 4.899
	X/R Pos	0.97			X/R Pos	1.07
NPH3	Voltage Rating (V)	480		NPH4	Voltage Rating (V)	480
	EquipmentCategory	LV Panelboard			EquipmentCategory	LV Panelboard
	Manufacturer	SQUARE D			Manufacturer	SQUARE D
	BusLibType	NF CLASS 1670			BusLibType	NF CLASS 1670
	BusLibDesc	100-600A			BusLibDesc	100-600A
	RatingDescription	250A 480V 250.0A 35.0kA 4.899			RatingDescription	250A 480V 250.0A 35.0kA 4.899
	X/R Pos	1.79			X/R Pos	1.74
NPL1	Voltage Rating (V)	240		NPL2	Voltage Rating (V)	240
	EquipmentCategory	LV Panelboard			EquipmentCategory	LV Panelboard
	Manufacturer	SQUARE D			Manufacturer	SQUARE D
	BusLibType	NQOD CLASS 1630			BusLibType	NQOD CLASS 1630
	BusLibDesc	100-600A			BusLibDesc	100-600A
	RatingDescription	400A 240V 400.0A 22.0kA 4.899			RatingDescription	400A 240V 400.0A 22.0kA 4.899
	X/R Pos	1.57			X/R Pos	1.62
NPL3	Voltage Rating (V)	240		NPL4	Voltage Rating (V)	240
	EquipmentCategory	LV Panelboard			EquipmentCategory	LV Panelboard
	Manufacturer	SQUARE D			Manufacturer	SQUARE D
	BusLibType	NQOD CLASS 1630			BusLibType	NQOD CLASS 1630
	BusLibDesc	100-600A			BusLibDesc	100-600A
	RatingDescription	400A 240V 400.0A 22.0kA 4.899			RatingDescription	400A 240V 400.0A 22.0kA 4.899
	X/R Pos	1.57			X/R Pos	1.38
SEDP	Voltage Rating (V)	480				
	EquipmentCategory	LV Panelboard				
	Manufacturer	SQUARE D				
	BusLibType	I-LINE CLASS 2110				
	BusLibDesc	1200A				
	RatingDescription	1200A 480V 1200.0A 35.0kA 4.899				
	X/R Pos	2.64				

Component	Field	Base Project		Component	Field	Base Project
ATS-E-F	Name	ATS-E-F		ATS-N-F	Name	ATS-N-F
	Bus	GDP			Bus	SEDP
	Conductor Desc	3-1/C+G			Conductor Desc	3-1/C+G
	Size (kcmil)	350			Size (kcmil)	350
	Cable(s) in Parallel	2			Cable(s) in Parallel	2
	Length (ft)	10.00			Length (ft)	10.00
	Size/Do Not Size	Size			Size/Do Not Size	Size
EDPH-F	Name	EDPH-F		EDPL-F	Name	EDPL-F
	Bus	BUS-0126			Bus	BUS-0139
	Conductor Desc	3-1/C+G			Conductor Desc	3-1/C+G
	Size (kcmil)	350			Size (kcmil)	600
	Cable(s) in Parallel	2			Cable(s) in Parallel	1
	Length (ft)	10.00			Length (ft)	10.00
	Size/Do Not Size	Size			Size/Do Not Size	Size
EDPL1-1-F	Name	EDPL1-1-F		EDPL1-2-F	Name	EDPL1-2-F
	Bus	EDPL			Bus	EDPL
	Conductor Desc	3-1/C+G			Conductor Desc	3-1/C+G
	Size (AWG)	1			Size (AWG)	1
	Cable(s) in Parallel	1			Cable(s) in Parallel	1
	Length (ft)	10.00			Length (ft)	150.00
	Size/Do Not Size	Size			Size/Do Not Size	Size
EDPL1-3-F	Name	EDPL1-3-F		EDPL1-4-F	Name	EDPL1-4-F
	Bus	EDPL			Bus	EDPL
	Conductor Desc	3-1/C+G			Conductor Desc	3-1/C+G
	Size (AWG)	1			Size (AWG)	1
	Cable(s) in Parallel	1			Cable(s) in Parallel	1
	Length (ft)	120.00			Length (ft)	170.00
	Size/Do Not Size	Size			Size/Do Not Size	Size
EDPL1-5-F	Name	EDPL1-5-F		ELEV-F	Name	ELEV-F
	Bus	EDPL			Bus	SEDP
	Conductor Desc	3-1/C+G			Conductor Desc	3-1/C+G
	Size (AWG)	1			Size (AWG)	2/0
	Cable(s) in Parallel	1			Cable(s) in Parallel	1
	Length (ft)	150.00			Length (ft)	75.00
	Size/Do Not Size	Size			Size/Do Not Size	Size
EPH1-F	Name	EPH1-F		EPH2-F	Name	EPH2-F
	Bus	EDPH			Bus	EDPH
	Conductor Desc	3-1/C+G			Conductor Desc	3-1/C+G
	Size (AWG)	1			Size (AWG)	1
	Cable(s) in Parallel	1			Cable(s) in Parallel	1
	Length (ft)	10.00			Length (ft)	10.00
	Size/Do Not Size	Size			Size/Do Not Size	Size
GEN-F	Name	GEN-F		NPH1-F	Name	NPH1-F
	Bus	BUS-0119			Bus	SEDP
	Conductor Desc	3-(1/C)			Conductor Desc	3-1/C+G
	Size (kcmil)	250			Size (AWG)	1
	Cable(s) in Parallel	1			Cable(s) in Parallel	1
	Length (ft)	235.00			Length (ft)	150.00
	Size/Do Not Size	Size			Size/Do Not Size	Size
NPH2-F	Name	NPH2-F		NPH3-F	Name	NPH3-F
	Bus	SEDP			Bus	SEDP
	Conductor Desc	3-1/C+G			Conductor Desc	3-1/C+G
	Size (AWG)	1			Size (kcmil)	250
	Cable(s) in Parallel	1			Cable(s) in Parallel	1
	Length (ft)	120.00			Length (ft)	150.00
	Size/Do Not Size	Size			Size/Do Not Size	Size
NPH4-F	Name	NPH4-F		NPL1-F	Name	NPL1-F
	Bus	SEDP			Bus	BUS-0141
	Conductor Desc	3-1/C+G			Conductor Desc	3-1/C+G
	Size (kcmil)	250			Size (kcmil)	600
	Cable(s) in Parallel	1			Cable(s) in Parallel	1
	Length (ft)	170.00			Length (ft)	10.00
	Size/Do Not Size	Size			Size/Do Not Size	Size
NPL2-F	Name	NPL2-F		NPL3-F	Name	NPL3-F
	Bus	BUS-0142			Bus	BUS-0143
	Conductor Desc	3-1/C+G			Conductor Desc	3-1/C+G
	Size (kcmil)	600			Size (kcmil)	600
	Cable(s) in Parallel	1			Cable(s) in Parallel	1
	Length (ft)	10.00			Length (ft)	10.00
	Size/Do Not Size	Size			Size/Do Not Size	Size

Component	Field	Base Project		Component	Field	Base Project
NPL4-F	Name	NPL4-F		SEDP-F	Name	SEDP-F
	Bus	BUS-0144			Bus	BUS-0212
	Conductor Desc	3-1/C+G			Conductor Desc	3-(1/C)
	Size (kcmil)	600			Size (kcmil)	600
	Cable(s) in Parallel	1			Cable(s) in Parallel	3
	Length (ft)	10.00			Length (ft)	255.00
	Size/Do Not Size	Size			Size/Do Not Size	Size
T-EDPL-F	Name	T-EDPL-F		T-NPL1-F	Name	T-NPL1-F
	Bus	EDPH			Bus	SEDP
	Conductor Desc	3-1/C+G			Conductor Desc	3-1/C+G
	Size (AWG)	1			Size (AWG)	2/0
	Cable(s) in Parallel	1			Cable(s) in Parallel	1
	Length (ft)	10.00			Length (ft)	150.00
	Size/Do Not Size	Size			Size/Do Not Size	Size
T-NPL2-F	Name	T-NPL2-F		T-NPL3-F	Name	T-NPL3-F
	Bus	SEDP			Bus	SEDP
	Conductor Desc	3-1/C+G			Conductor Desc	3-1/C+G
	Size (AWG)	2/0			Size (AWG)	2/0
	Cable(s) in Parallel	1			Cable(s) in Parallel	1
	Length (ft)	120.00			Length (ft)	150.00
	Size/Do Not Size	Size			Size/Do Not Size	Size
T-NPL4-F	Name	T-NPL4-F		UTIL-F	Name	UTIL-F
	Bus	SEDP			Bus	BUS-0113
	Conductor Desc	3-1/C+G			Conductor Desc	3-1/C
	Size (AWG)	2/0			Size (AWG)	4/0
	Cable(s) in Parallel	1			Cable(s) in Parallel	1
	Length (ft)	170.00			Length (ft)	500.00
	Size/Do Not Size	Size			Size/Do Not Size	Size

Component	Field	Base Project		Component	Field	Base Project
EPH1-LOAD	RatedSize (kVA)	1.30		EPH2-LOAD	RatedSize (kVA)	1.80
	PF (Lag)	0.90			PF (Lag)	0.90
	RatedVoltage (V)	480.00			RatedVoltage (V)	480.00
EPL1-1-LOAD	RatedSize (kVA)	14.00		EPL1-2-LOAD	RatedSize (kVA)	4.00
	PF (Lag)	0.90			PF (Lag)	0.90
	RatedVoltage (V)	208.00			RatedVoltage (V)	208.00
EPL1-3-LOAD	RatedSize (kVA)	4.00		EPL1-4-LOAD	RatedSize (kVA)	4.00
	PF (Lag)	0.90			PF (Lag)	0.90
	RatedVoltage (V)	208.00			RatedVoltage (V)	208.00
EPL1-5-LOAD	RatedSize (kVA)	17.00		NPH1-LOAD	RatedSize (kVA)	34.00
	PF (Lag)	0.90			PF (Lag)	0.90
	RatedVoltage (V)	208.00			RatedVoltage (V)	480.00
NPH2-LOAD	RatedSize (kVA)	46.00		NPH3-LOAD	RatedSize (kVA)	135.00
	PF (Lag)	0.90			PF (Lag)	0.90
	RatedVoltage (V)	480.00			RatedVoltage (V)	480.00
NPH4-LOAD	RatedSize (kVA)	126.00		NPL1-LOAD	RatedSize (kVA)	72.00
	PF (Lag)	0.90			PF (Lag)	0.90
	RatedVoltage (V)	480.00			RatedVoltage (V)	208.00
NPL2-LOAD	RatedSize (kVA)	63.00		NPL3-LOAD	RatedSize (kVA)	68.00
	PF (Lag)	0.90			PF (Lag)	0.90
	RatedVoltage (V)	208.00			RatedVoltage (V)	208.00
NPL4-LOAD	RatedSize (kVA)	92.00				
	PF (Lag)	0.90				
	RatedVoltage (V)	208.00				

Component	Field	Base Project		Component	Field	Base Project
T-EDPL	ComponentName	T-EDPL		T-NPL1	ComponentName	T-NPL1
	kVA (kVA)	112.50			kVA (kVA)	112.50
	Pri Connection	Delta			Pri Connection	Delta
	Pri Tap (%)	0.00			Pri Tap (%)	0.00
	Sec Connection	Wye-Ground			Sec Connection	Wye-Ground
	Sec Tap (%)	1.50			Sec Tap (%)	3.00
	X/R	1.74			X/R	1.74
	Z% (%)	3.81			Z% (%)	3.81
T-NPL2	ComponentName	T-NPL2		T-NPL3	ComponentName	T-NPL3
	kVA (kVA)	112.50			kVA (kVA)	112.50
	Pri Connection	Delta			Pri Connection	Delta
	Pri Tap (%)	0.00			Pri Tap (%)	0.00
	Sec Connection	Wye-Ground			Sec Connection	Wye-Ground
	Sec Tap (%)	2.50			Sec Tap (%)	3.00
	X/R	1.74			X/R	1.74
	Z% (%)	3.81			Z% (%)	3.81
T-NPL4	ComponentName	T-NPL4		T-UTIL	ComponentName	T-UTIL
	kVA (kVA)	112.50			kVA (kVA)	750.00
	Pri Connection	Delta			Pri Connection	Delta
	Pri Tap (%)	0.00			Pri Tap (%)	0.00
	Sec Connection	Wye-Ground			Sec Connection	Wye-Ground
	Sec Tap (%)	3.00			Sec Tap (%)	3.00
	X/R	1.44			X/R	4.90
	Z% (%)	4.49			Z% (%)	5.00

Appendix 3.4

Power Load-Flow Analysis

Component	Field	UTILITY POWER PATH	GENERATOR POWER PATH
EDPH	Nominal (V)	480.00	480.00
	ConnectedLoad (kVA)	46.10	46.10
	DemandLoad (kVA)	46.10	46.10
	LF Voltage (V)	473.52	478.45
	LF Current (A)	57.18	56.57
	LF kW (kW)	42.05	42.04
	LF kVA (kVA)	46.90	46.88
EDPL	Nominal (V)	208.00	208.00
	ConnectedLoad (kVA)	43.00	43.00
	DemandLoad (kVA)	43.00	43.00
	LF Voltage (V)	205.48	207.68
	LF Current (A)	121.42	120.12
	LF kW (kW)	38.90	38.90
	LF kVA (kVA)	43.21	43.21
EDPL1-2	Nominal (V)	208.00	208.00
	ConnectedLoad (kVA)	4.00	4.00
	DemandLoad (kVA)	4.00	4.00
	LF Voltage (V)	204.98	207.19
	LF Current (A)	11.27	11.15
	LF kW (kW)	3.60	3.60
	LF kVA (kVA)	4.00	4.00
EDPL1-3	Nominal (V)	208.00	208.00
	ConnectedLoad (kVA)	4.00	4.00
	DemandLoad (kVA)	4.00	4.00
	LF Voltage (V)	205.08	207.29
	LF Current (A)	11.26	11.14
	LF kW (kW)	3.60	3.60
	LF kVA (kVA)	4.00	4.00
EDPL1-4	Nominal (V)	208.00	208.00
	ConnectedLoad (kVA)	4.00	4.00
	DemandLoad (kVA)	4.00	4.00
	LF Voltage (V)	204.92	207.13
	LF Current (A)	11.27	11.15
	LF kW (kW)	3.60	3.60
	LF kVA (kVA)	4.00	4.00
EDPL1-5	Nominal (V)	208.00	208.00
	ConnectedLoad (kVA)	17.00	17.00
	DemandLoad (kVA)	17.00	17.00
	LF Voltage (V)	203.36	205.59
	LF Current (A)	48.26	47.74
	LF kW (kW)	15.30	15.30
	LF kVA (kVA)	17.00	17.00
EPH1	Nominal (V)	480.00	480.00
	ConnectedLoad (kVA)	1.30	1.30
	DemandLoad (kVA)	1.30	1.30
	LF Voltage (V)	473.51	478.45
	LF Current (A)	1.59	1.57
	LF kW (kW)	1.17	1.17
	LF kVA (kVA)	1.30	1.30

EPH2	Nominal (V)	480.00	480.00
	ConnectedLoad (kVA)	1.80	1.80
	DemandLoad (kVA)	1.80	1.80
	LF Voltage (V)	473.51	478.45
	LF Current (A)	2.19	2.17
	LF kW (kW)	1.62	1.62
	LF kVA (kVA)	1.80	1.80
EPL1-1	Nominal (V)	208.00	208.00
	ConnectedLoad (kVA)	14.00	14.00
	DemandLoad (kVA)	14.00	14.00
	LF Voltage (V)	205.36	207.57
	LF Current (A)	39.36	38.94
	LF kW (kW)	12.60	12.60
	LF kVA (kVA)	14.00	14.00
GDP	Nominal (V)	480.00	480.00
	ConnectedLoad (kVA)	0.00	0.00
	DemandLoad (kVA)	0.00	0.00
	LF Voltage (V)	0.00	478.51
	LF Current (A)	0.00	56.57
	LF kW (kW)	0.00	42.04
	LF kVA (kVA)	0.00	46.89
NPH1	Nominal (V)	480.00	480.00
	ConnectedLoad (kVA)	34.00	34.00
	DemandLoad (kVA)	34.00	34.00
	LF Voltage (V)	471.75	0.00
	LF Current (A)	41.61	0.00
	LF kW (kW)	30.60	0.00
	LF kVA (kVA)	34.00	0.00
NPH2	Nominal (V)	480.00	480.00
	ConnectedLoad (kVA)	46.00	46.00
	DemandLoad (kVA)	46.00	46.00
	LF Voltage (V)	471.59	0.00
	LF Current (A)	56.32	0.00
	LF kW (kW)	41.40	0.00
	LF kVA (kVA)	46.00	0.00
NPH3	Nominal (V)	480.00	480.00
	ConnectedLoad (kVA)	135.00	135.00
	DemandLoad (kVA)	135.00	135.00
	LF Voltage (V)	466.24	0.00
	LF Current (A)	167.17	0.00
	LF kW (kW)	121.50	0.00
	LF kVA (kVA)	135.00	0.00
NPH4	Nominal (V)	480.00	480.00
	ConnectedLoad (kVA)	126.00	126.00
	DemandLoad (kVA)	126.00	126.00
	LF Voltage (V)	465.81	0.00
	LF Current (A)	156.17	0.00
	LF kW (kW)	113.40	0.00
	LF kVA (kVA)	126.00	0.00

NPL1	Nominal (V)	208.00	208.00
	ConnectedLoad (kVA)	72.00	72.00
	DemandLoad (kVA)	72.00	72.00
	LF Voltage (V)	204.81	0.00
	LF Current (A)	202.96	0.00
	LF kW (kW)	64.80	0.00
	LF kVA (kVA)	72.00	0.00
NPL2	Nominal (V)	208.00	208.00
	ConnectedLoad (kVA)	63.00	63.00
	DemandLoad (kVA)	63.00	63.00
	LF Voltage (V)	204.97	0.00
	LF Current (A)	177.45	0.00
	LF kW (kW)	56.70	0.00
	LF kVA (kVA)	63.00	0.00
NPL3	Nominal (V)	208.00	208.00
	ConnectedLoad (kVA)	68.00	68.00
	DemandLoad (kVA)	68.00	68.00
	LF Voltage (V)	205.19	0.00
	LF Current (A)	191.34	0.00
	LF kW (kW)	61.20	0.00
	LF kVA (kVA)	68.00	0.00
NPL4	Nominal (V)	208.00	208.00
	ConnectedLoad (kVA)	92.00	92.00
	DemandLoad (kVA)	92.00	92.00
	LF Voltage (V)	202.58	0.00
	LF Current (A)	262.20	0.00
	LF kW (kW)	82.80	0.00
	LF kVA (kVA)	92.00	0.00
SEDP	Nominal (V)	480.00	480.00
	ConnectedLoad (kVA)	700.88	700.88
	DemandLoad (kVA)	700.88	700.88
	LF Voltage (V)	473.57	0.00
	LF Current (A)	873.19	0.00
	LF kW (kW)	641.84	0.00
	LF kVA (kVA)	716.23	0.00

Appendix 3.5

Short-Circuit Calculation

Component	Field	UTILITY POWER PATH	GENERATOR POWER PATH
NPH3	ComponentName	NPH3	NPH3
	SystemNominalVoltage (V)	480.00	480.00
	InitSymRMS 3P (A)	9507.89	0.00
	InitSymRMS SLG (A)	7587.50	0.00
NPH4	ComponentName	NPH4	NPH4
	SystemNominalVoltage (V)	480.00	480.00
	InitSymRMS 3P (A)	9088.65	0.00
	InitSymRMS SLG (A)	7157.92	0.00
NPL1	ComponentName	NPL1	NPL1
	SystemNominalVoltage (V)	208.00	208.00
	InitSymRMS 3P (A)	5576.41	0.00
	InitSymRMS SLG (A)	6103.93	0.00
NPL2	ComponentName	NPL2	NPL2
	SystemNominalVoltage (V)	208.00	208.00
	InitSymRMS 3P (A)	5750.86	0.00
	InitSymRMS SLG (A)	6248.72	0.00
NPL3	ComponentName	NPL3	NPL3
	SystemNominalVoltage (V)	208.00	208.00
	InitSymRMS 3P (A)	5576.41	0.00
	InitSymRMS SLG (A)	6103.93	0.00
NPL4	ComponentName	NPL4	NPL4
	SystemNominalVoltage (V)	208.00	208.00
	InitSymRMS 3P (A)	4886.75	0.00
	InitSymRMS SLG (A)	5318.68	0.00
SEDP	ComponentName	SEDP	SEDP
	SystemNominalVoltage (V)	480.00	480.00
	InitSymRMS 3P (A)	14210.68	0.00
	InitSymRMS SLG (A)	13162.68	0.00

Component	Field	UTILITY POWER PATH	GENERATOR POWER PATH
EDPH	ComponentName	EDPH	EDPH
	SystemNominalVoltage (V)	480.00	480.00
	InitSymRMS 3P (A)	13816.25	1185.16
	InitSymRMS SLG (A)	12651.34	1157.82
EDPL	ComponentName	EDPL	EDPL
	SystemNominalVoltage (V)	208.00	208.00
	InitSymRMS 3P (A)	6355.32	2025.66
	InitSymRMS SLG (A)	6728.76	2684.58
EDPL1-2	ComponentName	EDPL1-2	EDPL1-2
	SystemNominalVoltage (V)	208.00	208.00
	InitSymRMS 3P (A)	2976.76	1579.78
	InitSymRMS SLG (A)	2166.48	1567.79
EDPL1-3	ComponentName	EDPL1-3	EDPL1-3
	SystemNominalVoltage (V)	208.00	208.00
	InitSymRMS 3P (A)	3358.72	1661.37
	InitSymRMS SLG (A)	2532.00	1732.41
EDPL1-4	ComponentName	EDPL1-4	EDPL1-4
	SystemNominalVoltage (V)	208.00	208.00
	InitSymRMS 3P (A)	2764.78	1528.15
	InitSymRMS SLG (A)	1975.08	1472.02
EDPL1-5	ComponentName	EDPL1-5	EDPL1-5
	SystemNominalVoltage (V)	208.00	208.00
	InitSymRMS 3P (A)	2976.76	1579.78
	InitSymRMS SLG (A)	2166.48	1567.79
EPH1	ComponentName	EPH1	EPH1
	SystemNominalVoltage (V)	480.00	480.00
	InitSymRMS 3P (A)	13163.33	1181.18
	InitSymRMS SLG (A)	11769.68	1151.81
EPH2	ComponentName	EPH2	EPH2
	SystemNominalVoltage (V)	480.00	480.00
	InitSymRMS 3P (A)	13163.33	1181.18
	InitSymRMS SLG (A)	11769.68	1151.81
EPL1-1	ComponentName	EPL1-1	EPL1-1
	SystemNominalVoltage (V)	208.00	208.00
	InitSymRMS 3P (A)	5968.78	1994.22
	InitSymRMS SLG (A)	6032.90	2592.05
GDP	ComponentName	GDP	GDP
	SystemNominalVoltage (V)	480.00	480.00
	InitSymRMS 3P (A)	1187.89	1187.89
	InitSymRMS SLG (A)	1161.78	1161.78
NPH1	ComponentName	NPH1	NPH1
	SystemNominalVoltage (V)	480.00	480.00
	InitSymRMS 3P (A)	7062.19	0.00
	InitSymRMS SLG (A)	4953.19	0.00
NPH2	ComponentName	NPH2	NPH2
	SystemNominalVoltage (V)	480.00	480.00
	InitSymRMS 3P (A)	7966.68	0.00
	InitSymRMS SLG (A)	5762.99	0.00

UTILITY PATH
Equipment Evaluation Report - All Buses

Bus	Status	Manufacturer	Type	Bus Voltage	VD%	LF Current	Design Amps	Ampacity	LF Rating%	Design%	Calc Isc kA	Dev Isc kA	Series Rating kA	Isc Rating%
EDPH	Passed	SQUARE D	LV Panelboard	480	3.02	58.20	55.45	800.0	7.28	6.93	11.49	35.00		32.83
EDPL	Passed	SQUARE D	LV Panelboard	208	2.93	123.59	119.36	400.0	30.90	29.84	6.51	35.00		18.60
EDPL1-2	Passed	SQUARE D	LV Panelboard	208	3.17	11.47	11.10	250.0	4.59	4.44	2.91	25.00		11.64
EDPL1-3	Passed	SQUARE D	LV Panelboard	208	3.12	11.46	11.10	250.0	4.58	4.44	3.27	25.00		13.09
EDPL1-4	Passed	SQUARE D	LV Panelboard	208	3.20	11.47	11.10	250.0	4.59	4.44	2.71	25.00		10.83
EDPL1-5	Passed	SQUARE D	LV Panelboard	208	3.96	49.14	47.19	250.0	19.65	18.87	2.91	25.00		11.64
EPH1	Passed	SQUARE D	LV Panelboard	480	3.02	1.61	1.56	125.0	1.29	1.25	10.82	35.00		30.91
EPH2	Passed	SQUARE D	LV Panelboard	480	3.02	2.23	2.17	125.0	1.79	1.73	10.82	35.00		30.91
EPL1-1	Passed	SQUARE D	LV Panelboard	208	2.98	40.06	38.86	250.0	16.02	15.54	6.04	25.00		24.16
NPH1	Passed	SQUARE D	LV Panelboard	480	3.39	42.33	40.90	250.0	16.93	16.36	6.27	35.00		17.93
NPH2	Passed	SQUARE D	LV Panelboard	480	3.42	57.29	55.33	250.0	22.92	22.13	6.98	35.00		19.94
NPH3	Passed	SQUARE D	LV Panelboard	480	3.66	168.54	162.38	250.0	67.42	64.95	8.18	35.00		23.37
NPH4	Passed	SQUARE D	LV Panelboard	480	3.69	157.37	151.55	250.0	62.95	60.62	7.86	35.00		22.46
NPL1	Passed	SQUARE D	LV Panelboard	208	2.98	205.98	199.85	400.0	51.50	49.96	5.92	22.00		26.90
NPL2	Passed	SQUARE D	LV Panelboard	208	2.97	180.23	174.87	400.0	45.06	43.72	6.05	22.00		27.52
NPL3	Passed	SQUARE D	LV Panelboard	208	2.81	194.21	188.75	400.0	48.55	47.19	5.92	22.00		26.90
NPL4	Passed	SQUARE D	LV Panelboard	208	4.64	267.80	255.37	400.0	66.95	63.84	5.17	22.00		23.52
SEDP	Passed	SQUARE D	LV Panelboard	480	3.01	885.23	848.67	1200.0	73.77	70.72	11.92	35.00		34.05

SKM disclaims responsibility or liability from use and interpretation of this report.

UTILITY PATH

All Protection Devices - Equipment Evaluation Report Based on Balanced System Study Module Comprehensive Fault Analysis Bus Data

	Device/Bus Manufacturer	Status	Description	Voltage (V) Bus/Device/ Rating%	Continuous Amps LF/Dev/ Rating%	Design Amps Design/Dev/Rating %	INT kA Calc/Dev/Series Rating%	C-L kA Calc/Dev/ Rating%	K	PartingTime Speed Cycles	X/R
	ATS-N-FB	Passed	Powerpact P-Frame, 5.0 & 6.0 A/P/H	480	58.20	55.45	11.92				2.79
	SEDP		LSI, 250-1200A	480	800.00	800.00	35.00				
	SQUARE D		PG	100.00	7.28	6.93	34.05				
	EDPH-MB	Passed	Powerpact P-Frame, 5.0 & 6.0 A/P/H	480	58.20	55.45	11.49				2.70
	EDPH		LSI, 250-1200A	480	800.00	800.00	35.00				
	SQUARE D		PG	100.00	7.28	6.93	32.83				
	EDPL-MB	Passed	Powerpact J Frame, 5.2A/E & 6.2A/E	208	123.59	119.36	6.51				1.80
	EDPL		LSI, 250AS	480	175.00	175.00	18.00				
	SQUARE D		JD	43.33	70.62	68.20	36.16				
	EDPL1-1-FB	Passed	Powerpact H-Frame, 5.2A/E & 6.2A/E	208	40.06	38.86	6.51				1.80
	EDPL		LSI, 150AS	480	150.00	150.00	18.00				
	SQUARE D		HD	43.33	26.70	25.91	36.16				
	EDPL1-2-FB	Passed	Powerpact H-Frame, 5.2A/E & 6.2A/E	208	11.47	11.10	6.51				1.80
	EDPL		LSI, 150AS	480	150.00	150.00	18.00				
	SQUARE D		HD	43.33	7.64	7.40	36.16				
	EDPL1-3-FB	Passed	Powerpact H-Frame, 5.2A/E & 6.2A/E	208	11.46	11.10	6.51				1.80
	EDPL		LSI, 150AS	480	150.00	150.00	18.00				
	SQUARE D		HD	43.33	7.64	7.40	36.16				
	EDPL1-4-FB	Passed	Powerpact H-Frame, 5.2A/E & 6.2A/E	208	11.47	11.10	6.51				1.80
	EDPL		LSI, 150AS	480	150.00	150.00	18.00				
	SQUARE D		HD	43.33	7.65	7.40	36.16				
	EDPL1-5-FB	Passed	Powerpact H-Frame, 5.2A/E & 6.2A/E	208	49.14	47.19	6.51				1.80
	EDPL		LSI, 150AS	480	150.00	150.00	18.00				
	SQUARE D		HD	43.33	32.76	31.46	36.16				

SKM disclaims responsibility or liability from use and interpretation of this report.

Device/Bus Manufacturer	Status	Description	Voltage (V) Bus/Device/ Rating%	Continuous Amps LF/Dev/ Rating%	Design Amps Design/Dev/Rating %	INT kA Calc/Dev/Series Rating%	C-L kA Calc/Dev/ Rating%	K	PartingTime Speed Cycles	X/R
ELEV-FB	Passed	Powerpact H-Frame, 5.2A/E & 6.2A/E	480	23.42	28.38	11.92				2.79
SEDP		LSI, 150AS	480	150.00	150.00	18.00				
SQUARE D		HD	100.00	15.62	18.92	66.21				
ELEVATOR-F	Passed	LPJ, 600V Class J	480	23.42	28.38	9.08				1.67
BUS-0147		1-600A	600	100.00	100.00	300.00				
BUSSMANN		LPJ-100SP	80.00	23.42	28.38	3.03				
ELEVATOR-FS	Passed	Fused DS	480	23.42	28.38	9.08		0.00	0.0	1.67
BUS-0147		30-1200A	600	100.00	100.00	100.00			5.0	
UL 98		100A	80.00	23.42	28.38	9.08				
EPH1-CB	Passed	EG	480	0.00	0.00	10.82				2.25
EPH1		15-125A	480	20.00	20.00	35.00				
SQUARE D		EG	100.00	0.00	0.00	30.91				
EPH1-FB	Passed	Powerpact H-Frame, 5.2A/E & 6.2A/E	480	1.61	1.56	11.49				2.70
EDPH		LSI, 150AS	480	150.00	150.00	18.00				
SQUARE D		HD	100.00	1.07	1.04	63.84				
EPH1-MB	Passed	Powerpact H-Frame, 5.2A/E & 6.2A/E	480	1.61	1.56	10.82				2.25
EPH1		LSI, 150AS	480	150.00	150.00	18.00				
SQUARE D		HD	100.00	1.07	1.04	60.11				
EPH2-CB	Passed	EG	480	0.00	0.00	10.82				2.25
EPH2		15-125A	480	20.00	20.00	35.00				
SQUARE D		EG	100.00	0.00	0.00	30.91				
EPH2-FB	Passed	Powerpact H-Frame, 5.2A/E & 6.2A/E	480	2.23	2.17	11.49				2.70
EDPH		LSI, 150AS	480	150.00	150.00	18.00				

SKM disclaims responsibility or liability from use and interpretation of this report.

Device/Bus Manufacturer	Status	Description	Voltage (V) Bus/Device/ Rating%	Continuous Amps LF/Dev/ Rating%	Design Amps Design/Dev/Rating %	INT kA Calc/Dev/Series Rating%	C-L kA Calc/Dev/ Rating%	K	PartingTime Speed Cycles	X/R
SQUARE D		HD	100.00	1.49	1.44	63.84				
EPH2-MB	Passed	Powerpact H-Frame, 5.2A/E & 6.2A/E	480	2.23	2.17	10.82				2.25
EPH2		LSI, 150AS	480	150.00	150.00	18.00				
SQUARE D		HD	100.00	1.49	1.44	60.11				
EPL1-1-CB	Passed	QO-VH, 1-Pole	120	0.00	0.00	6.04				1.54
EPL1-1		15-30A	240	20.00	20.00	22.00				
SQUARE D		QO-VH	50.00	0.00	0.00	27.46				
EPL1-1-MB	Passed	Powerpact H-Frame, 5.2A/E & 6.2A/E	208	40.06	38.86	6.04				1.54
EPL1-1		LSI, 150AS	480	150.00	150.00	18.00				
SQUARE D		HD	43.33	26.70	25.91	33.56				
EPL1-2-CB	Passed	QO-VH, 1-Pole	120	0.00	0.00	2.91				0.79
EDPL1-2		15-30A	240	20.00	20.00	22.00				
SQUARE D		QO-VH	50.00	0.00	0.00	13.23				
EPL1-2-MB	Passed	Powerpact H-Frame, 5.2A/E & 6.2A/E	208	11.47	11.10	2.91				0.79
EDPL1-2		LSI, 150AS	480	150.00	150.00	18.00				
SQUARE D		HD	43.33	7.64	7.40	16.16				
EPL1-3-CB	Passed	QO-VH, 1-Pole	120	0.00	0.00	3.27				0.86
EDPL1-3		15-30A	240	20.00	20.00	22.00				
SQUARE D		QO-VH	50.00	0.00	0.00	14.88				
EPL1-3-MB	Passed	Powerpact H-Frame, 5.2A/E & 6.2A/E	208	11.46	11.10	3.27				0.86
EDPL1-3		LSI, 150AS	480	150.00	150.00	18.00				
SQUARE D		HD	43.33	7.64	7.40	18.18				
EPL1-4-CB	Passed	QO-VH, 1-Pole	120	0.00	0.00	2.71				0.75

SKM disclaims responsibility or liability from use and interpretation of this report.

Device/Bus Manufacturer	Status	Description	Voltage (V) Bus/Device/ Rating%	Continuous Amps LF/Dev/ Rating%	Design Amps Design/Dev/Rating %	INT kA Calc/Dev/Series Rating%	C-L kA Calc/Dev/ Rating%	K	PartingTime Speed Cycles	X/R
EDPL1-4		15-30A	240	20.00	20.00	22.00				
SQUARE D		QO-VH	50.00	0.00	0.00	12.30				
EPL1-4-MB	Passed	Powerpact H-Frame, 5.2A/E & 6.2A/E	208	11.47	11.10	2.71				0.75
EDPL1-4		LSI, 150AS	480	150.00	150.00	18.00				
SQUARE D		HD	43.33	7.65	7.40	15.04				
EPL1-5-CB	Passed	QO-VH, 1-Pole	120	0.00	0.00	2.91				0.79
EDPL1-5		15-30A	240	20.00	20.00	22.00				
SQUARE D		QO-VH	50.00	0.00	0.00	13.23				
EPL1-5-MB	Passed	Powerpact H-Frame, 5.2A/E & 6.2A/E	208	49.14	47.19	2.91				0.79
EDPL1-5		LSI, 150AS	480	150.00	150.00	18.00				
SQUARE D		HD	43.33	32.76	31.46	16.16				
NPH1-CB	Passed	EHB-AS	480	0.00	0.00	6.27				0.97
NPH1		15-30A	480	20.00	20.00	14.00				
SQUARE D		EHB-AS	100.00	0.00	0.00	44.82				
NPH1-FB	Passed	Powerpact J Frame, 5.2A/E & 6.2A/E	480	42.33	40.90	11.92				2.79
SEDP		LSI, 250AS	480	250.00	250.00	18.00				
SQUARE D		JD	100.00	16.93	16.36	66.21				
NPH1-MB	Passed	Powerpact J Frame, 5.2A/E & 6.2A/E	480	42.33	40.90	6.27				0.97
NPH1		LSI, 250AS	480	250.00	250.00	18.00				
SQUARE D		JD	100.00	16.93	16.36	34.86				
NPH2-CB	Passed	EHB-AS	480	0.00	0.00	6.98				1.07
NPH2		15-30A	480	20.00	20.00	14.00				
SQUARE D		EHB-AS	100.00	0.00	0.00	49.84				

SKM disclaims responsibility or liability from use and interpretation of this report.

	Device/Bus Manufacturer	Status	Description	Voltage (V) Bus/Device/ Rating%	Continuous Amps LF/Dev/ Rating%	Design Amps Design/Dev/Rating %	INT kA Calc/Dev/Series Rating%	C-L kA Calc/Dev/ Rating%	K	PartingTime Speed Cycles	X/R
	NPH2-FB	Passed	Powerpact J Frame, 5.2A/E & 6.2A/E	480	57.29	55.33	11.92				2.79
	SEDP		LSI, 250AS	480	250.00	250.00	18.00				
	SQUARE D		JD	100.00	22.92	22.13	66.21				
	NPH2-MB	Passed	Powerpact J Frame, 5.2A/E & 6.2A/E	480	57.29	55.33	6.98				1.07
	NPH2		LSI, 250AS	480	250.00	250.00	18.00				
	SQUARE D		JD	100.00	22.92	22.13	38.77				
	NPH3-CB	Passed	Powerpact J Frame, 5.2A/E & 6.2A/E	480	0.00	0.00	8.18				1.79
	NPH3		LSI, 250AS	480	250.00	250.00	35.00				
	SQUARE D		JG	100.00	0.00	0.00	23.37				
	NPH3-FB	Passed	Powerpact J Frame, 5.2A/E & 6.2A/E	480	168.54	162.38	11.92				2.79
	SEDP		LSI, 250AS	480	250.00	250.00	35.00				
	SQUARE D		JG	100.00	67.42	64.95	34.05				
	NPH3-MB	Passed	Powerpact J Frame, 5.2A/E & 6.2A/E	480	168.54	162.38	8.18				1.79
	NPH3		LSI, 250AS	480	250.00	250.00	18.00				
	SQUARE D		JD	100.00	67.42	64.95	45.44				
	NPH4-CB	Passed	Powerpact HD	480	0.00	0.00	7.86				1.74
	NPH4		15-150A	480	100.00	100.00	18.00				
	SQUARE D		HD	100.00	0.00	0.00	43.68				
	NPH4-FB	Passed	Powerpact J Frame, 5.2A/E & 6.2A/E	480	157.37	151.55	11.92				2.79
	SEDP		LSI, 250AS	480	250.00	250.00	18.00				
	SQUARE D		JD	100.00	62.95	60.62	66.21				
	NPH4-MB	Passed	Powerpact J Frame, 5.2A/E & 6.2A/E	480	157.37	151.55	7.86				1.74
	NPH4		LSI, 250AS	480	250.00	250.00	18.00				
	SQUARE D		JD	100.00	62.95	60.62	43.68				

SKM disclaims responsibility or liability from use and interpretation of this report.

Device/Bus Manufacturer	Status	Description	Voltage (V) Bus/Device/ Rating%	Continuous Amps LF/Dev/ Rating%	Design Amps Design/Dev/Rating %	INT kA Calc/Dev/Series Rating%	C-L kA Calc/Dev/ Rating%	K	PartingTime Speed Cycles	X/R
NPL1-CB	Passed	QO-VH, 1-Pole	120	0.00	0.00	5.92				1.61
NPL1		15-30A	240	20.00	20.00	22.00				
SQUARE D		QO-VH	50.00	0.00	0.00	26.90				
NPL1-MB	Passed	Powerpact L-Frame, 5.3A/E & 6.3A/E	208	205.98	199.85	5.92				1.61
NPL1		LSI, 400AS	240	400.00	400.00	25.00				
SQUARE D		LD	86.67	51.50	49.96	23.67				
NPL2-CB	Passed	QO-VH, 1-Pole	120	0.00	0.00	6.05				1.65
NPL2		15-30A	240	20.00	20.00	22.00				
SQUARE D		QO-VH	50.00	0.00	0.00	27.52				
NPL2-MB	Passed	Powerpact L-Frame, 5.3A/E & 6.3A/E	208	180.23	174.87	6.05				1.65
NPL2		LSI, 400AS	240	400.00	400.00	25.00				
SQUARE D		LD	86.67	45.06	43.72	24.22				
NPL3-CB	Passed	QO-VH, 1-Pole	120	0.00	0.00	5.92				1.61
NPL3		15-30A	240	20.00	20.00	22.00				
SQUARE D		QO-VH	50.00	0.00	0.00	26.90				
NPL3-MB	Passed	Powerpact L-Frame, 5.3A/E & 6.3A/E	208	194.21	188.75	5.92				1.61
NPL3		LSI, 400AS	240	400.00	400.00	25.00				
SQUARE D		LD	86.67	48.55	47.19	23.67				
NPL4-CB	Passed	QO-VH, 1-Pole	120	0.00	0.00	5.17				1.39
NPL4		15-30A	240	20.00	20.00	22.00				
SQUARE D		QO-VH	50.00	0.00	0.00	23.52				
NPL4-MB	Passed	Powerpact L-Frame, 5.3A/E & 6.3A/E	208	267.80	255.37	5.17				1.39
NPL4		LSI, 400AS	240	400.00	400.00	25.00				

SKM disclaims responsibility or liability from use and interpretation of this report.

Device/Bus Manufacturer	Status	Description	Voltage (V) Bus/Device/ Rating%	Continuous Amps LF/Dev/ Rating%	Design Amps Design/Dev/Rating %	INT kA Calc/Dev/Series Rating%	C-L kA Calc/Dev/ Rating%	K	PartingTime Speed Cycles	X/R
SQUARE D		LD	86.67	66.95	63.84	20.70				
SEDP-MB	Passed	Powerpact P-Frame, 5.0 & 6.0 A/P/H	480	885.23	848.67	11.92				2.79
SEDP		LSI, 250-1200A	480	1200.00	1200.00	35.00				
SQUARE D		PG	100.00	73.77	70.72	34.05				
T-EDPL-FB	Passed	Powerpact J Frame, 5.2A/E & 6.2A/E	480	54.36	51.72	11.49				2.70
EDPH		LSI, 250AS	480	175.00	175.00	18.00				
SQUARE D		JD	100.00	31.06	29.55	63.84				
T-NPL1-FB	Passed	Powerpact J Frame, 5.2A/E & 6.2A/E	480	91.94	86.60	11.92				2.79
SEDP		LSI, 250AS	480	175.00	175.00	35.00				
SQUARE D		JG	100.00	52.53	49.49	34.05				
T-NPL2-FB	Passed	Powerpact J Frame, 5.2A/E & 6.2A/E	480	80.05	75.78	11.92				2.79
SEDP		LSI, 250AS	480	175.00	175.00	35.00				
SQUARE D		JG	100.00	45.74	43.30	34.05				
T-NPL3-FB	Passed	Powerpact J Frame, 5.2A/E & 6.2A/E	480	86.68	81.79	11.92				2.79
SEDP		LSI, 250AS	480	175.00	175.00	35.00				
SQUARE D		JG	100.00	49.53	46.74	34.05				
T-NPL4-FB	Passed	Powerpact J Frame, 5.2A/E & 6.2A/E	480	119.53	110.66	11.92				2.79
SEDP		LSI, 250AS	480	175.00	175.00	35.00				
SQUARE D		JG	100.00	68.30	63.23	34.05				
UTIL-FS	Passed	SM-5, 14.4kV E-Rated	13200	33.16	30.86	1.96	1.97			1.11
BUS-0211		3E- 2-400E Standard Speed	13200	50.00	50.00	25.00	40.00			
S&C		SM-5, 50E	100.00	66.31	61.72	7.84	4.91			

SKM disclaims responsibility or liability from use and interpretation of this report.

UTILITY PATH

Equipment Evaluation Report Based on Balanced System Study Module Load Flow and Sizing Data

Device	Status	Bus	Bus Volts	Rated Volts	VD%	LF Amps	Design Amps	Ampacity	LF%	Design%	Calc Isc kA	Dev Isc kA	Isc kA%	Calc Mom kA	Dev Mom kA
ATS-N-F	Passed	SEDP	480	600	0.01	58.20	55.45	620.0	9.39	8.94					
EDPH-F	Passed	BUS-0126	480	600	0.01	58.20	55.45	620.0	9.39	8.94					
EDPL-F	Passed	BUS-0139	208	600	0.04	123.59	119.36	420.0	29.43	28.42					
EDPL1-1-F	Passed	EDPL	208	600	0.06	40.06	38.86	130.0	30.81	29.89					
EDPL1-2-F	Passed	EDPL	208	600	0.24	11.47	11.10	130.0	8.82	8.54					
EDPL1-3-F	Passed	EDPL	208	600	0.19	11.46	11.10	130.0	8.82	8.54					
EDPL1-4-F	Passed	EDPL	208	600	0.27	11.47	11.10	130.0	8.82	8.54					
EDPL1-5-F	Passed	EDPL	208	600	1.04	49.14	47.19	130.0	37.80	36.30					
ELEV-F	Passed	SEDP	480	600	0.07	23.42	28.38	175.0	13.38	16.22					
EPH1-F	Passed	EDPH	480	600	0.00	1.61	1.56	130.0	1.24	1.20					
EPH2-F	Passed	EDPH	480	600	0.00	2.23	2.17	130.0	1.72	1.67					
NPH1-F	Passed	SEDP	480	600	0.39	42.33	40.90	130.0	32.56	31.46					
NPH2-F	Passed	SEDP	480	600	0.42	57.29	55.33	130.0	44.07	42.56					
NPH3-F	Passed	SEDP	480	600	0.65	168.54	162.38	255.0	66.09	63.68					
NPH4-F	Passed	SEDP	480	600	0.69	157.37	151.55	255.0	61.71	59.43					
NPL1-F	Passed	BUS-0141	208	600	0.07	205.98	199.85	420.0	49.04	47.58					
NPL2-F	Passed	BUS-0142	208	600	0.07	180.23	174.87	420.0	42.91	41.64					
NPL3-F	Passed	BUS-0143	208	600	0.07	194.21	188.75	420.0	46.24	44.94					
NPL4-F	Passed	BUS-0144	208	600	0.10	267.80	255.37	420.0	63.76	60.80					
SEDP-F	Passed	BUS-0212	480	600	1.03	885.23	848.67	1260.0	70.26	67.35					
T-EDPL-F	Passed	EDPH	480	600	0.03	54.36	51.72	130.0	41.81	39.79					
T-NPL1-F	Passed	SEDP	480	600	0.57	91.94	86.60	175.0	52.53	49.49					
T-NPL2-F	Passed	SEDP	480	600	0.40	80.05	75.78	175.0	45.74	43.30					
T-NPL3-F	Passed	SEDP	480	600	0.54	86.68	81.79	175.0	49.53	46.74					
T-NPL4-F	Passed	SEDP	480	600	0.84	119.53	110.66	175.0	68.30	63.23					

SKM disclaims responsibility or liability from use and interpretation of this report.

UTILITY PATH

Equipment Evaluation Report Based on Balanced System Study Module Load Flow and Sizing Data

Device	Status	Bus	Bus Volts	Rated Volts	VD%	LF Amps	Design Amps	Ampacity	LF%	Design%	Calc Isc kA	Dev Isc kA	Isc kA%	Calc Mom kA	Dev Mom kA
UTIL-F	Passed	BUS-0113	13200	15000	0.02	33.16	30.86	274.4	12.09	11.25					
T-EDPL (Pri)	Passed	BUS-0129	480	480	-0.17	54.36	51.72	135.3	40.17	38.22					
T-EDPL (Sec)		BUS-0139	208	208	-0.17	123.59	119.36	312.3	39.58	38.22					
T-NPL1 (Pri)	Passed	BUS-0131	480	480	-0.68	91.94	86.60	135.3	67.94	64.00					
T-NPL1 (Sec)		BUS-0141	208	208	-0.68	205.98	199.85	312.3	65.96	64.00					
T-NPL2 (Pri)	Passed	BUS-0132	480	480	-0.50	80.05	75.78	135.3	59.16	56.00					
T-NPL2 (Sec)		BUS-0142	208	208	-0.50	180.23	174.87	312.3	57.72	56.00					
T-NPL3 (Pri)	Passed	BUS-0133	480	480	-0.81	86.68	81.79	135.3	64.06	60.44					
T-NPL3 (Sec)		BUS-0143	208	208	-0.81	194.21	188.75	312.3	62.19	60.44					
T-NPL4 (Pri)	Passed	BUS-0134	480	480	0.70	119.53	110.66	135.3	88.33	81.78					
T-NPL4 (Sec)		BUS-0144	208	208	0.70	267.80	255.37	312.3	85.76	81.78					
T-UTIL (Pri)	Passed	BUS-0211	13200	13200	0.36	33.16	30.86	37.7	87.89	81.81					
T-UTIL (Sec)		BUS-0212	480	480	0.36	885.23	848.67	1037.4	85.33	81.81					
EPH1-LOAD	Passed	EPH1	480	480	3.02	1.61									
EPH2-LOAD	Passed	EPH2	480	480	3.02	2.23									
EPL1-1-LOAD	Passed	EPL1-1	208	208	2.98	40.06									
EPL1-2-LOAD	Passed	EDPL1-2	208	208	3.17	11.47									
EPL1-3-LOAD	Passed	EDPL1-3	208	208	3.12	11.46									
EPL1-4-LOAD	Passed	EDPL1-4	208	208	3.20	11.47									
EPL1-5-LOAD	Passed	EDPL1-5	208	208	3.96	49.14									
NPH1-LOAD	Passed	NPH1	480	480	3.39	42.33									
NPH2-LOAD	Passed	NPH2	480	480	3.42	57.29									
NPH3-LOAD	Passed	NPH3	480	480	3.66	168.54									
NPH4-LOAD	Passed	NPH4	480	480	3.69	157.37									
NPL1-LOAD	Passed	NPL1	208	208	2.98	205.98									

SKM disclaims responsibility or liability from use and interpretation of this report.

UTILITY PATH
Equipment Evaluation Report Based on Balanced System Study Module Load Flow and Sizing Data

	Device	Status	Bus	Bus Volts	Rated Volts	VD%	LF Amps	Design Amps	Ampacity	LF%	Design%	Calc Isc kA	Dev Isc kA	Isc kA%	Calc Mom kA	Dev Mom kA
	NPL2-LOAD	Passed	NPL2	208	208	2.97	180.23									
	NPL3-LOAD	Passed	NPL3	208	208	2.81	194.21									
	NPL4-LOAD	Passed	NPL4	208	208	4.64	267.80									
	ELEVATOR-1	Passed	BUS-0147	480	480	3.08	23.42									
	ATS	Passed	BUS-0126	480	480	3.01	58.20	55.45	600.0	9.70	9.24	11.44	42.00			52.37

SKM disclaims responsibility or liability from use and interpretation of this report.

GENERATOR PATH
Equipment Evaluation Report - All Buses

	Bus	Status	Manufacturer	Type	Bus Voltage	VD%	LF Current	Design Amps	Ampacity	LF Rating%	Design%	Calc Isc kA	Dev Isc kA	Series Rating kA	Isc Rating%
	EDPH	Passed	SQUARE D	LV Panelboard	480	3.02	58.20	55.45	800.0	7.28	6.93	11.49	35.00		32.83
	EDPL	Passed	SQUARE D	LV Panelboard	208	2.93	123.59	119.36	400.0	30.90	29.84	6.51	35.00		18.60
	EDPL1-2	Passed	SQUARE D	LV Panelboard	208	3.17	11.47	11.10	250.0	4.59	4.44	2.91	25.00		11.64
	EDPL1-3	Passed	SQUARE D	LV Panelboard	208	3.12	11.46	11.10	250.0	4.58	4.44	3.27	25.00		13.09
	EDPL1-4	Passed	SQUARE D	LV Panelboard	208	3.20	11.47	11.10	250.0	4.59	4.44	2.71	25.00		10.83
	EDPL1-5	Passed	SQUARE D	LV Panelboard	208	3.96	49.14	47.19	250.0	19.65	18.87	2.91	25.00		11.64
	EPH1	Passed	SQUARE D	LV Panelboard	480	3.02	1.61	1.56	125.0	1.29	1.25	10.82	35.00		30.91
	EPH2	Passed	SQUARE D	LV Panelboard	480	3.02	2.23	2.17	125.0	1.79	1.73	10.82	35.00		30.91
	EPL1-1	Passed	SQUARE D	LV Panelboard	208	2.98	40.06	38.86	250.0	16.02	15.54	6.04	25.00		24.16
	GDP	Passed	SQUARE D	LV Panelboard	480				800.0				35.00		

SKM disclaims responsibility or liability from use and interpretation of this report.

GENERATOR PATH
All Protection Devices - Equipment Evaluation Report Based on Balanced System Study Module Comprehensive Fault Analysis Bus Data

Device/Bus Manufacturer	Status	Description	Voltage (V) Bus/Device/ Rating%	Continuous Amps LF/Dev/ Rating%	Design Amps Design/Dev/ Rating%	INT kA Calc/Dev/Series Rating%	C-L kA Calc/Dev/ Rating%	K	PartingTime Speed Cycles	X/R
ATS-E-FB	Passed	Powerpact P-Frame, 5.0 & 6.0 A/P/H	480	0.00	0.00					9999.00
GDP		LSI, 250-1200A	480	600.00	600.00	35.00				
SQUARE D		PG	100.00	0.00	0.00	35.00				
EDPH-MB	Passed	Powerpact P-Frame, 5.0 & 6.0 A/P/H	480	58.20	55.45	11.49				2.70
EDPH		LSI, 250-1200A	480	800.00	800.00	35.00				
SQUARE D		PG	100.00	7.28	6.93	32.83				
EDPL-MB	Passed	Powerpact J Frame, 5.2A/E & 6.2A/E	208	123.59	119.36	6.51				1.80
EDPL		LSI, 250AS	480	175.00	175.00	18.00				
SQUARE D		JD	43.33	70.62	68.20	36.16				
EDPL1-1-FB	Passed	Powerpact H-Frame, 5.2A/E & 6.2A/I	208	40.06	38.86	6.51				1.80
EDPL		LSI, 150AS	480	150.00	150.00	18.00				
SQUARE D		HD	43.33	26.70	25.91	36.16				
EDPL1-2-FB	Passed	Powerpact H-Frame, 5.2A/E & 6.2A/I	208	11.47	11.10	6.51				1.80
EDPL		LSI, 150AS	480	150.00	150.00	18.00				
SQUARE D		HD	43.33	7.64	7.40	36.16				
EDPL1-3-FB	Passed	Powerpact H-Frame, 5.2A/E & 6.2A/I	208	11.46	11.10	6.51				1.80
EDPL		LSI, 150AS	480	150.00	150.00	18.00				
SQUARE D		HD	43.33	7.64	7.40	36.16				
EDPL1-4-FB	Passed	Powerpact H-Frame, 5.2A/E & 6.2A/I	208	11.47	11.10	6.51				1.80
EDPL		LSI, 150AS	480	150.00	150.00	18.00				
SQUARE D		HD	43.33	7.65	7.40	36.16				
EDPL1-5-FB	Passed	Powerpact H-Frame, 5.2A/E & 6.2A/I	208	49.14	47.19	6.51				1.80
EDPL		LSI, 150AS	480	150.00	150.00	18.00				
SQUARE D		HD	43.33	32.76	31.46	36.16				

SKM disclaims responsibility or liability from use and interpretation of this report.

Device/Bus Manufacturer	Status	Description	Voltage (V) Bus/Device/ Rating%	Continuous Amps LF/Dev/ Rating%	Design Amps Design/Dev/ Rating%	INT kA Calc/Dev/Series Rating%	C-L kA Calc/Dev/ Rating%	K	PartingTime Speed Cycles	X/R
EPH1-CB	Passed	EG	480	0.00	0.00	10.82				2.25
EPH1		15-125A	480	20.00	20.00	35.00				
SQUARE D		EG	100.00	0.00	0.00	30.91				
EPH1-FB	Passed	Powerpact H-Frame, 5.2A/E & 6.2A/I	480	1.61	1.56	11.49				2.70
EDPH		LSI, 150AS	480	150.00	150.00	18.00				
SQUARE D		HD	100.00	1.07	1.04	63.84				
EPH1-MB	Passed	Powerpact H-Frame, 5.2A/E & 6.2A/I	480	1.61	1.56	10.82				2.25
EPH1		LSI, 150AS	480	150.00	150.00	18.00				
SQUARE D		HD	100.00	1.07	1.04	60.11				
EPH2-CB	Passed	EG	480	0.00	0.00	10.82				2.25
EPH2		15-125A	480	20.00	20.00	35.00				
SQUARE D		EG	100.00	0.00	0.00	30.91				
EPH2-FB	Passed	Powerpact H-Frame, 5.2A/E & 6.2A/I	480	2.23	2.17	11.49				2.70
EDPH		LSI, 150AS	480	150.00	150.00	18.00				
SQUARE D		HD	100.00	1.49	1.44	63.84				
EPH2-MB	Passed	Powerpact H-Frame, 5.2A/E & 6.2A/I	480	2.23	2.17	10.82				2.25
EPH2		LSI, 150AS	480	150.00	150.00	18.00				
SQUARE D		HD	100.00	1.49	1.44	60.11				
EPL1-1-CB	Passed	QO-VH, 1-Pole	120	0.00	0.00	6.04				1.54
EPL1-1		15-30A	240	20.00	20.00	22.00				
SQUARE D		QO-VH	50.00	0.00	0.00	27.46				
EPL1-1-MB	Passed	Powerpact H-Frame, 5.2A/E & 6.2A/I	208	40.06	38.86	6.04				1.54
EPL1-1		LSI, 150AS	480	150.00	150.00	18.00				

SKM disclaims responsibility or liability from use and interpretation of this report.

Device/Bus Manufacturer	Status	Description	Voltage (V) Bus/Device/ Rating%	Continuous Amps LF/Dev/ Rating%	Design Amps Design/Dev/ Rating%	INT kA Calc/Dev/Series Rating%	C-L kA Calc/Dev/ Rating%	K	PartingTime Speed Cycles	X/R
SQUARE D		HD	43.33	26.70	25.91	33.56				
EPL1-2-CB	Passed	QO-VH, 1-Pole	120	0.00	0.00	2.91				0.79
EDPL1-2		15-30A	240	20.00	20.00	22.00				
SQUARE D		QO-VH	50.00	0.00	0.00	13.23				
EPL1-2-MB	Passed	Powerpact H-Frame, 5.2A/E & 6.2A/I	208	11.47	11.10	2.91				0.79
EDPL1-2		LSI, 150AS	480	150.00	150.00	18.00				
SQUARE D		HD	43.33	7.64	7.40	16.16				
EPL1-3-CB	Passed	QO-VH, 1-Pole	120	0.00	0.00	3.27				0.86
EDPL1-3		15-30A	240	20.00	20.00	22.00				
SQUARE D		QO-VH	50.00	0.00	0.00	14.88				
EPL1-3-MB	Passed	Powerpact H-Frame, 5.2A/E & 6.2A/I	208	11.46	11.10	3.27				0.86
EDPL1-3		LSI, 150AS	480	150.00	150.00	18.00				
SQUARE D		HD	43.33	7.64	7.40	18.18				
EPL1-4-CB	Passed	QO-VH, 1-Pole	120	0.00	0.00	2.71				0.75
EDPL1-4		15-30A	240	20.00	20.00	22.00				
SQUARE D		QO-VH	50.00	0.00	0.00	12.30				
EPL1-4-MB	Passed	Powerpact H-Frame, 5.2A/E & 6.2A/I	208	11.47	11.10	2.71				0.75
EDPL1-4		LSI, 150AS	480	150.00	150.00	18.00				
SQUARE D		HD	43.33	7.65	7.40	15.04				
EPL1-5-CB	Passed	QO-VH, 1-Pole	120	0.00	0.00	2.91				0.79
EDPL1-5		15-30A	240	20.00	20.00	22.00				
SQUARE D		QO-VH	50.00	0.00	0.00	13.23				
EPL1-5-MB	Passed	Powerpact H-Frame, 5.2A/E & 6.2A/I	208	49.14	47.19	2.91				0.79

SKM disclaims responsibility or liability from use and interpretation of this report.

GENERATOR PATH

All Protection Devices - Equipment Evaluation Report Based on Balanced System Study Module Comprehensive Fault Analysis Bus Data

	Device/Bus Manufacturer	Status	Description	Voltage (V) Bus/Device/ Rating%	Continuous Amps LF/Dev/ Rating%	Design Amps Design/Dev/ Rating%	INT kA Calc/Dev/Series Rating%	C-L kA Calc/Dev/ Rating%	K	PartingTime Speed Cycles	X/R
	EDPL1-5		LSI, 150AS	480	150.00	150.00	18.00				
	SQUARE D		HD	43.33	32.76	31.46	16.16				
	GEN-FB	Passed	Powerpact P-Frame, 5.0 & 6.0 A/P/H	480	0.00	0.00					9999.00
	BUS-0119		LSI, 250-1200A	480	250.00	250.00	35.00				
	SQUARE D		PG	100.00	0.00	0.00	35.00				
	GEN-MB	Passed	Powerpact P-Frame, 5.0 & 6.0 A/P/H	480	0.00	0.00					9999.00
	GDP		LSI, 250-1200A	480	250.00	250.00	35.00				
	SQUARE D		PG	100.00	0.00	0.00	35.00				
	T-EDPL-FB	Passed	Powerpact J Frame, 5.2A/E & 6.2A/E	480	54.36	51.72	11.49				2.70
	EDPH		LSI, 250AS	480	175.00	175.00	18.00				
	SQUARE D		JD	100.00	31.06	29.55	63.84				

SKM disclaims responsibility or liability from use and interpretation of this report.

GENERATOR PATH

Equipment Evaluation Report Based on Balanced System Study Module Load Flow and Sizing Data

Device	Status	Bus	Bus Volts	Rated Volts	VD%	LF Amps	Design Amps	Ampacity	LF%	Design%	Calc Isc kA	Dev Isc kA	Isc kA%	Calc Mom kA	Dev Mom kA
ATS-E-F	Passed	GDP	480	600				620.0							
EDPH-F	Passed	BUS-0126	480	600	0.01	58.20	55.45	620.0	9.39	8.94					
EDPL-F	Passed	BUS-0139	208	600	0.04	123.59	119.36	420.0	29.43	28.42					
EDPL1-1-F	Passed	EDPL	208	600	0.06	40.06	38.86	130.0	30.81	29.89					
EDPL1-2-F	Passed	EDPL	208	600	0.24	11.47	11.10	130.0	8.82	8.54					
EDPL1-3-F	Passed	EDPL	208	600	0.19	11.46	11.10	130.0	8.82	8.54					
EDPL1-4-F	Passed	EDPL	208	600	0.27	11.47	11.10	130.0	8.82	8.54					
EDPL1-5-F	Passed	EDPL	208	600	1.04	49.14	47.19	130.0	37.80	36.30					
EPH1-F	Passed	EDPH	480	600	0.00	1.61	1.56	130.0	1.24	1.20					
EPH2-F	Passed	EDPH	480	600	0.00	2.23	2.17	130.0	1.72	1.67					
GEN-F	Passed	BUS-0119	480	600				255.0							
T-EDPL-F	Passed	EDPH	480	600	0.03	54.36	51.72	130.0	41.81	39.79					
T-EDPL (Pri)	Passed	BUS-0129	480	480	-0.17	54.36	51.72	135.3	40.17	38.22					
T-EDPL (Sec)		BUS-0139	208	208	-0.17	123.59	119.36	312.3	39.58	38.22					
GEN	Unknown	BUS-0119	480	*480				187.6							
EPH1-LOAD	Passed	EPH1	480	480	3.02	1.61									
EPH2-LOAD	Passed	EPH2	480	480	3.02	2.23									
EPL1-1-LOAD	Passed	EPL1-1	208	208	2.98	40.06									
EPL1-2-LOAD	Passed	EDPL1-2	208	208	3.17	11.47									
EPL1-3-LOAD	Passed	EDPL1-3	208	208	3.12	11.46									
EPL1-4-LOAD	Passed	EDPL1-4	208	208	3.20	11.47									
EPL1-5-LOAD	Passed	EDPL1-5	208	208	3.96	49.14									
ATS	Passed	BUS-0126	480	480	3.01	58.20	55.45	600.0	9.70	9.24	11.44	42.00			52.37
(*Device Voltage) Device did not pass. Device is either Marginal (100%) or Failed (100%) of device voltage rating.															

SKM disclaims responsibility or liability from use and interpretation of this report.

Appendix 3.6

Protective Device Coordination Analysis

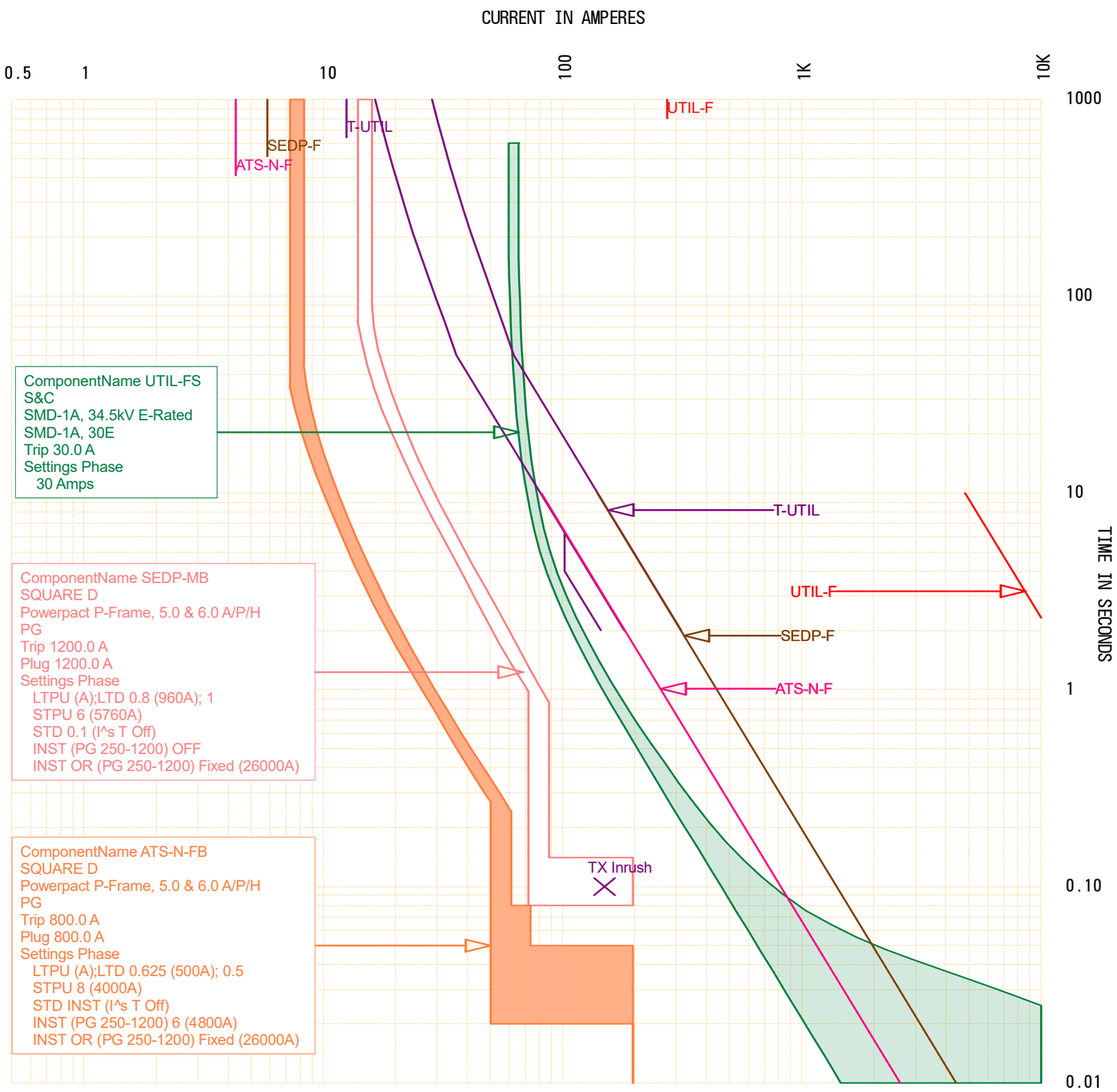

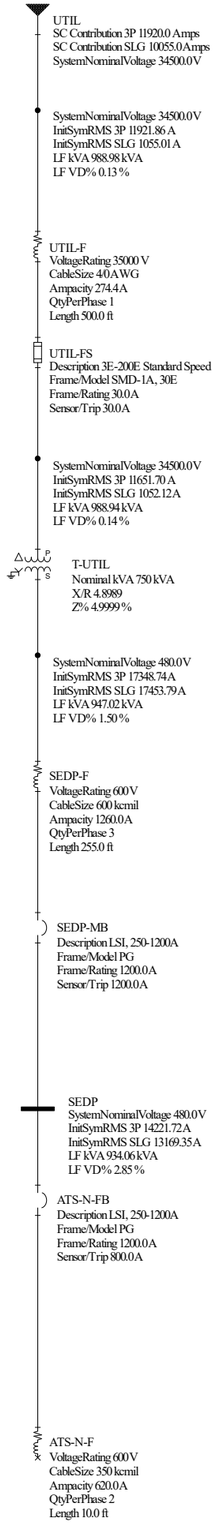

TCC: Study 1 - Incoming Utility Secondary Service Feeder Current Scale x 1 Reference Voltage: 34500

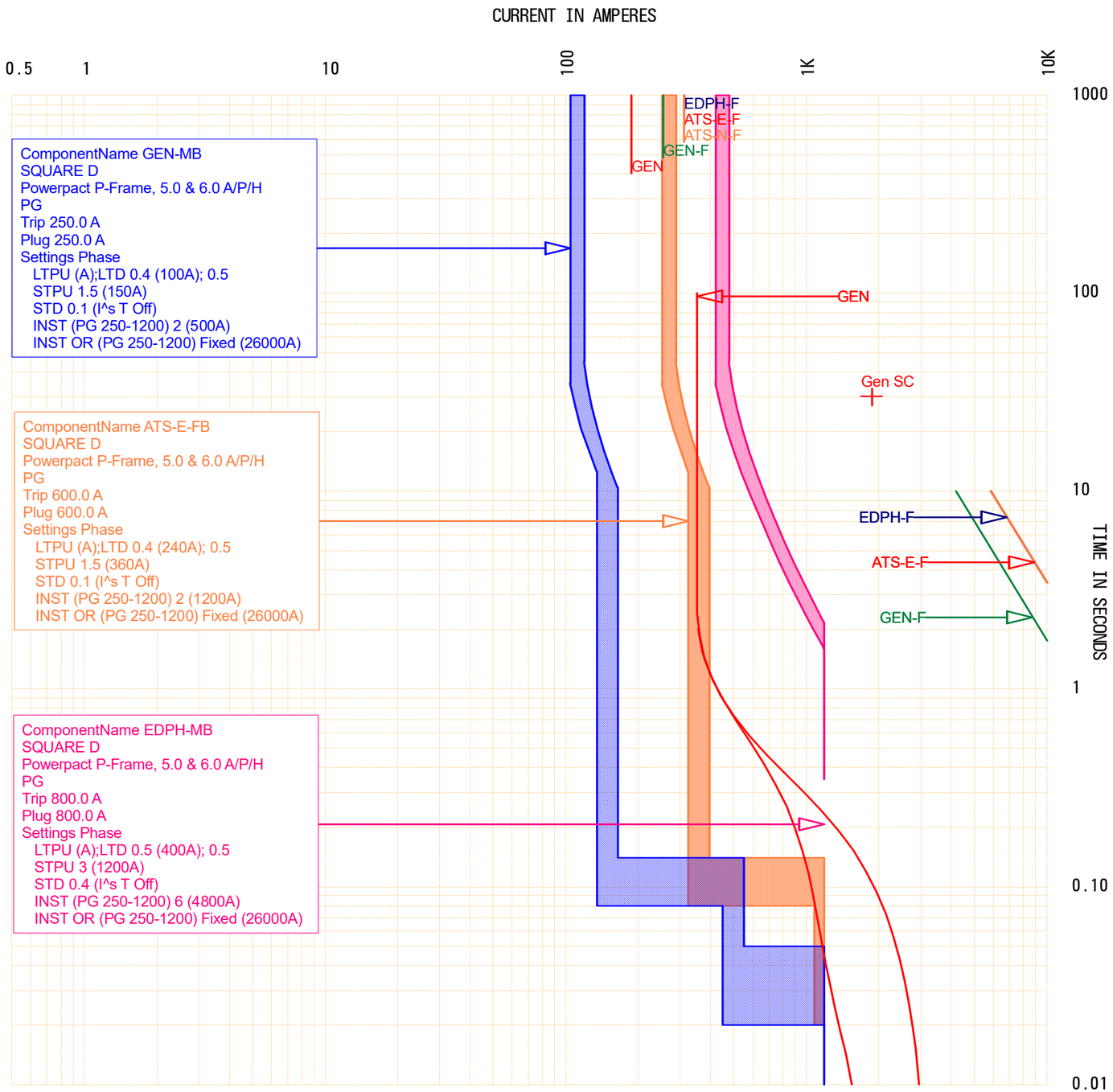

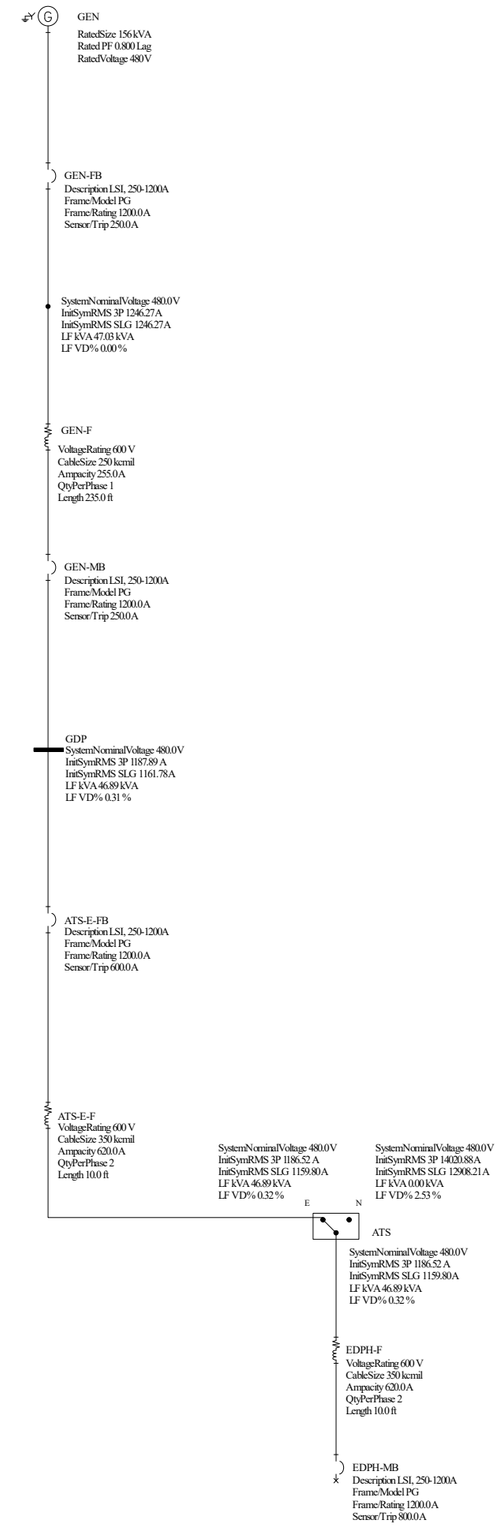

TCC: Study 2 - Generator Power Feeder Current Scale x 1 Reference Voltage: 480

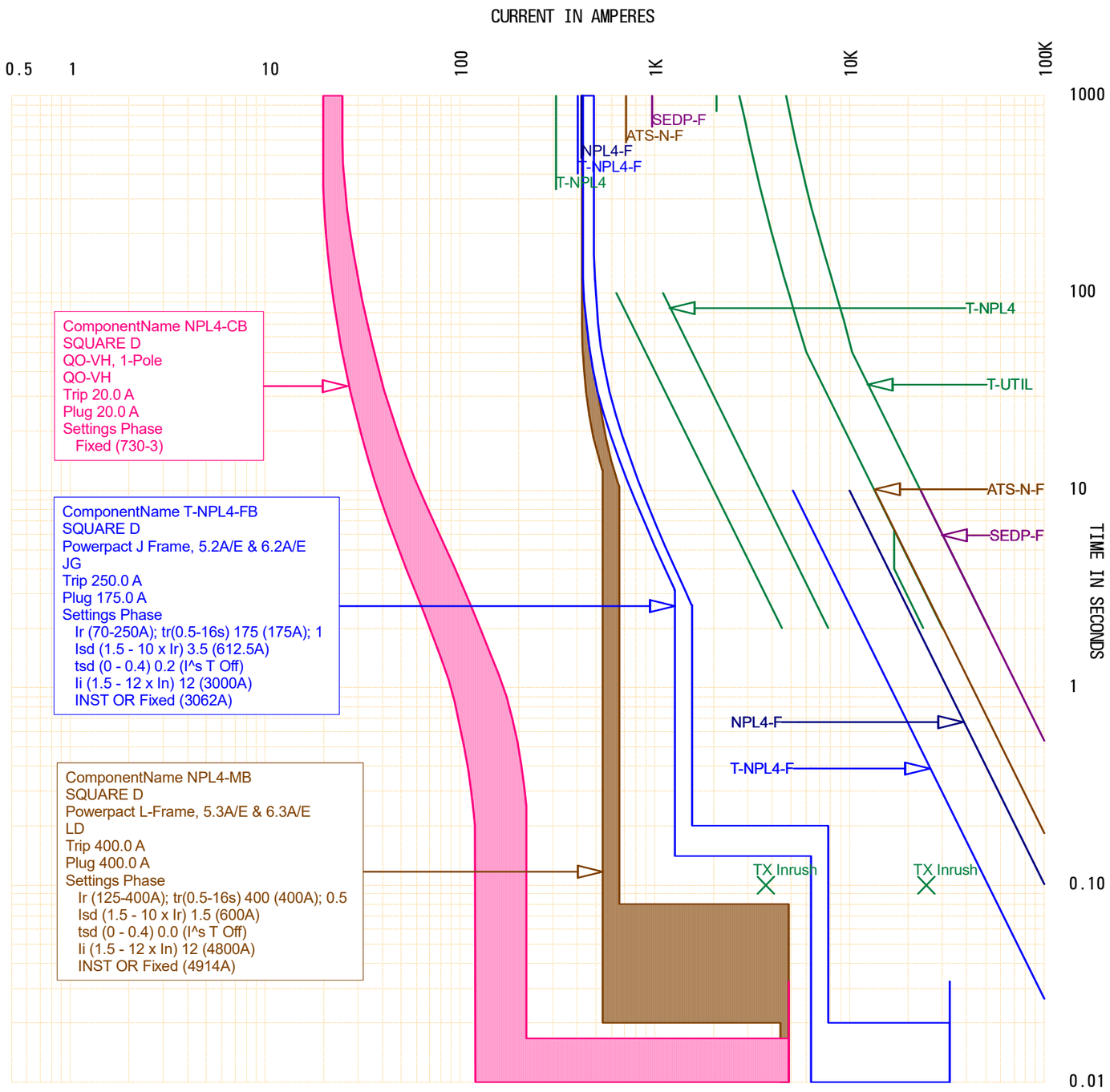

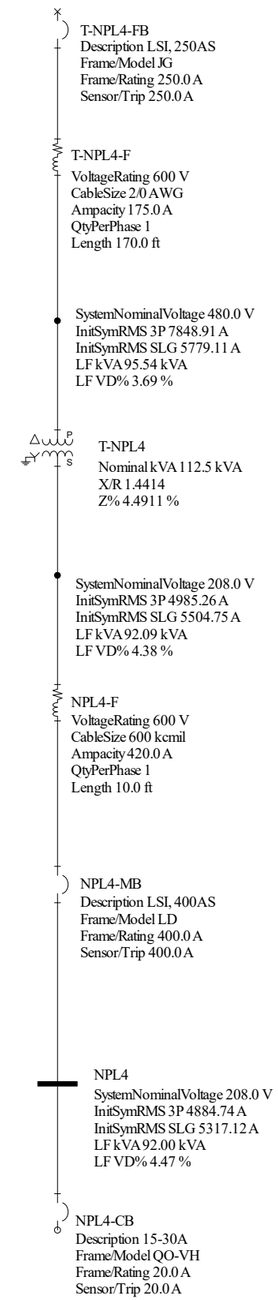

TCC: Study 3 - Typical 208V Normal Branch Panel Board Current Scale x 1 Reference Voltage: 208

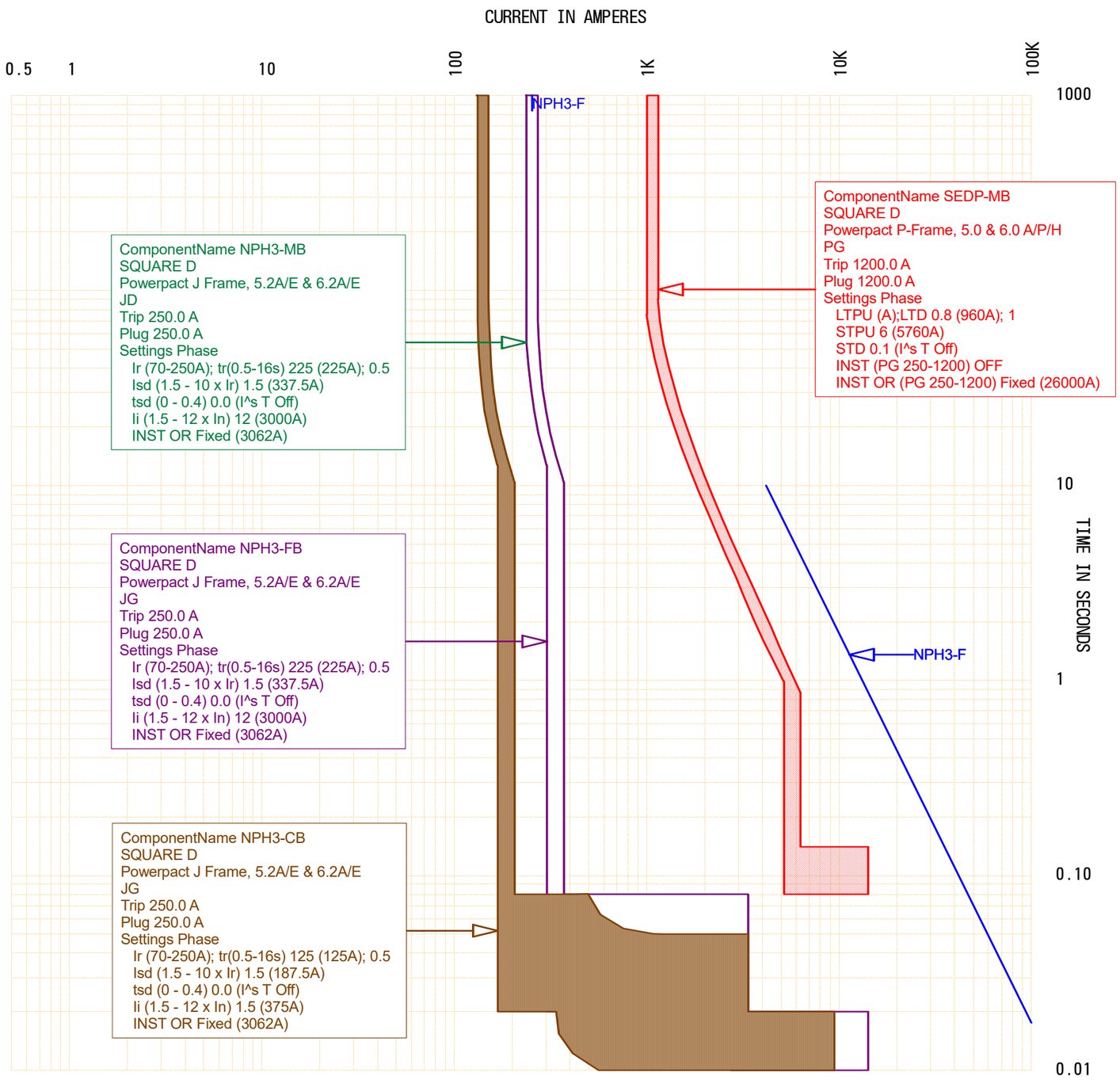

SEDP-MB
Description LSI, 250-1200A
Frame/Model PG
Frame/Rating 1200.0 A
Sensor/Trip 1200.0 A

SEDP
SystemNominalVoltage 480.0 V
InitSymRMS 3P 14221.72 A
InitSymRMS SLG 13169.35 A
LF kVA 934.06 kVA
LF VD% 2.85 %

NPH3-FB
Description LSI, 250AS
Frame/Model JG
Frame/Rating 250.0 A
Sensor/Trip 250.0 A

NPH3-F
VoltageRating 600 V
CableSize 250 kcmil
Ampacity 255.0 A
QtyPerPhase 1
Length 150.0 ft

NPH3-MB
Description LSI, 250AS
Frame/Model JD
Frame/Rating 250.0 A
Sensor/Trip 250.0 A

NPH3
SystemNominalVoltage 480.0 V
InitSymRMS 3P 9500.24 A
InitSymRMS SLG 7582.00 A
LF kVA 135.00 kVA
LF VD% 3.50 %

NPH3-CB
Description LSI, 250AS
Frame/Model JG
Frame/Rating 250.0 A
Sensor/Trip 250.0 A

TCC: Study 4 - Typical 480V Normal Branch Panel Board Current Scale x 1 Reference Voltage: 480

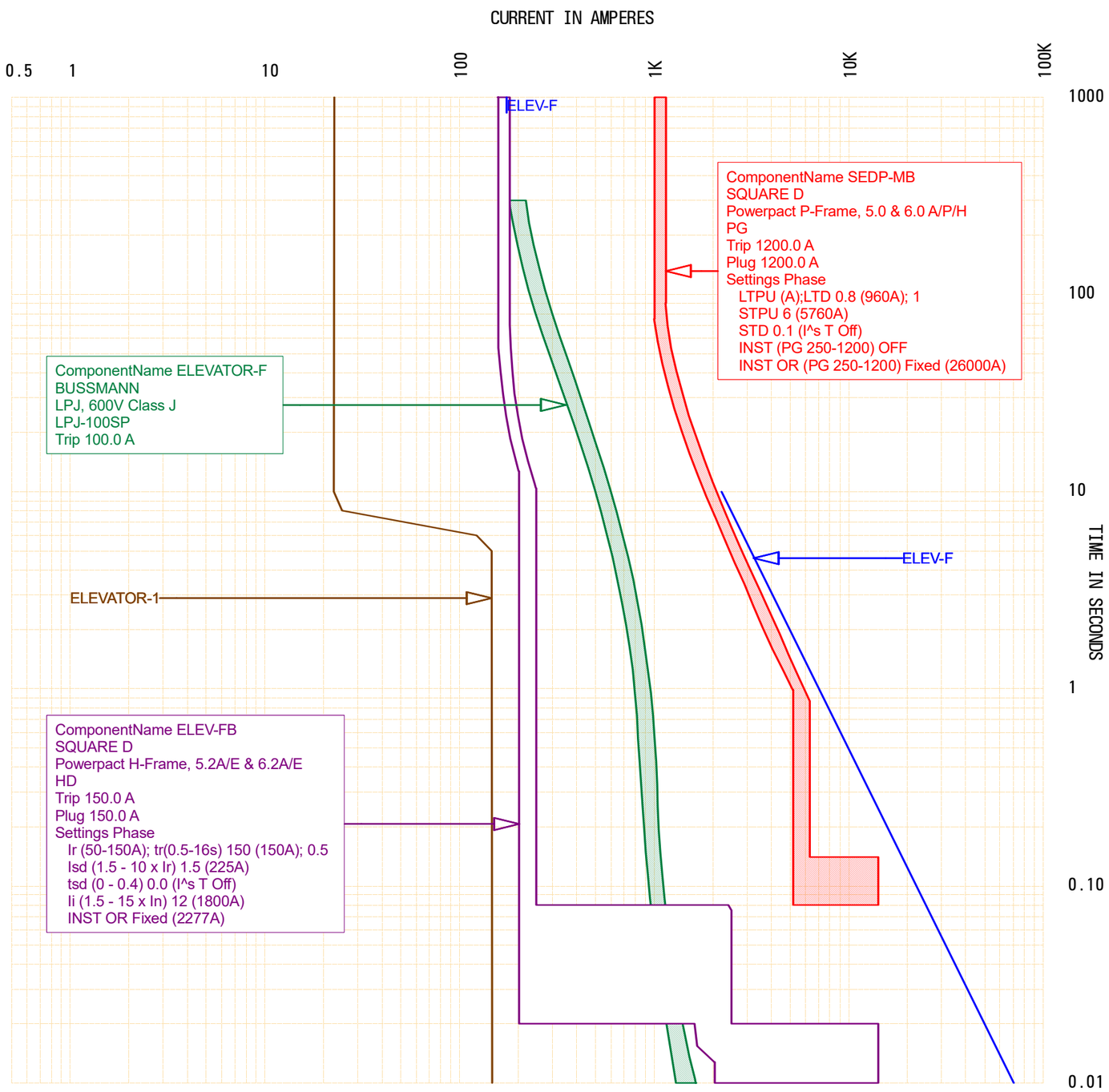

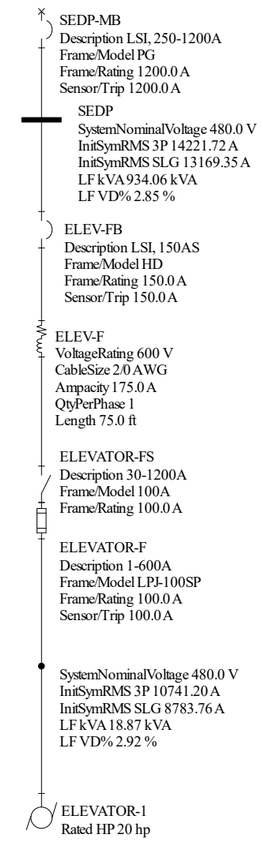

TCC: Study 5 - Elevator Motor Feeder Current Scale x 1 Reference Voltage: 480

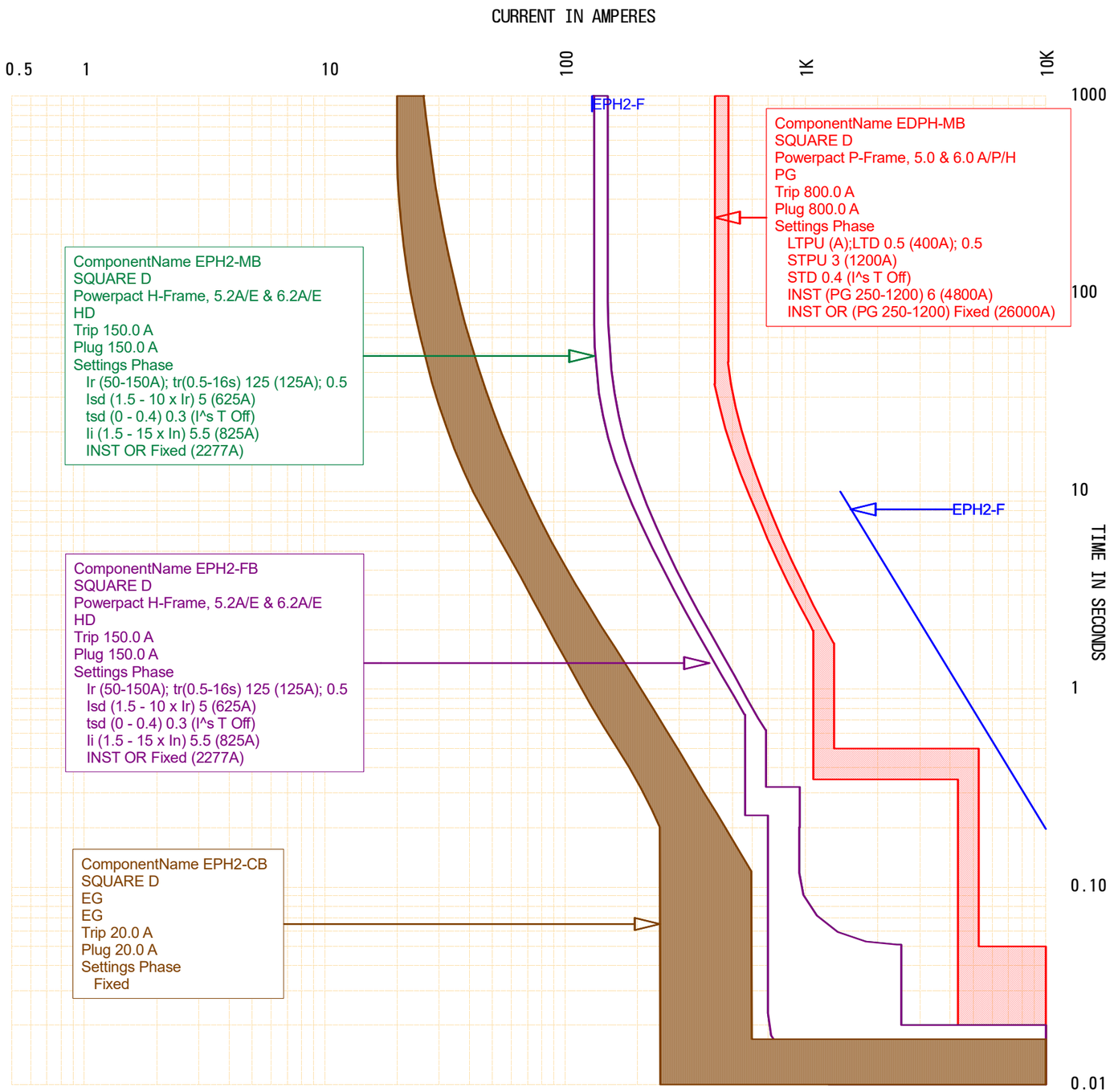

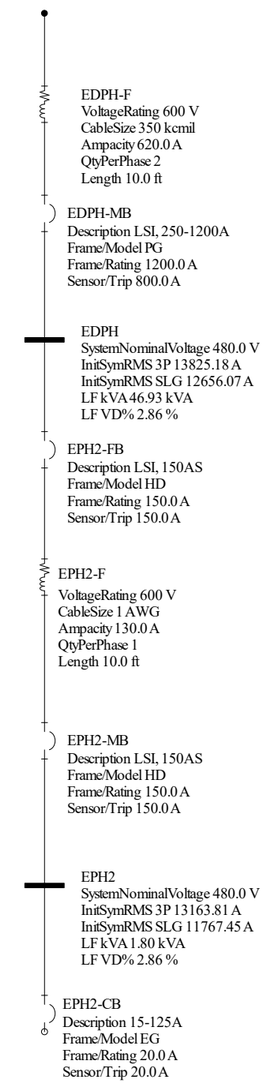

TCC: Study 6 - Typical 480V Essential Branch Panel Board Current Scale x 1 Reference Voltage: 480

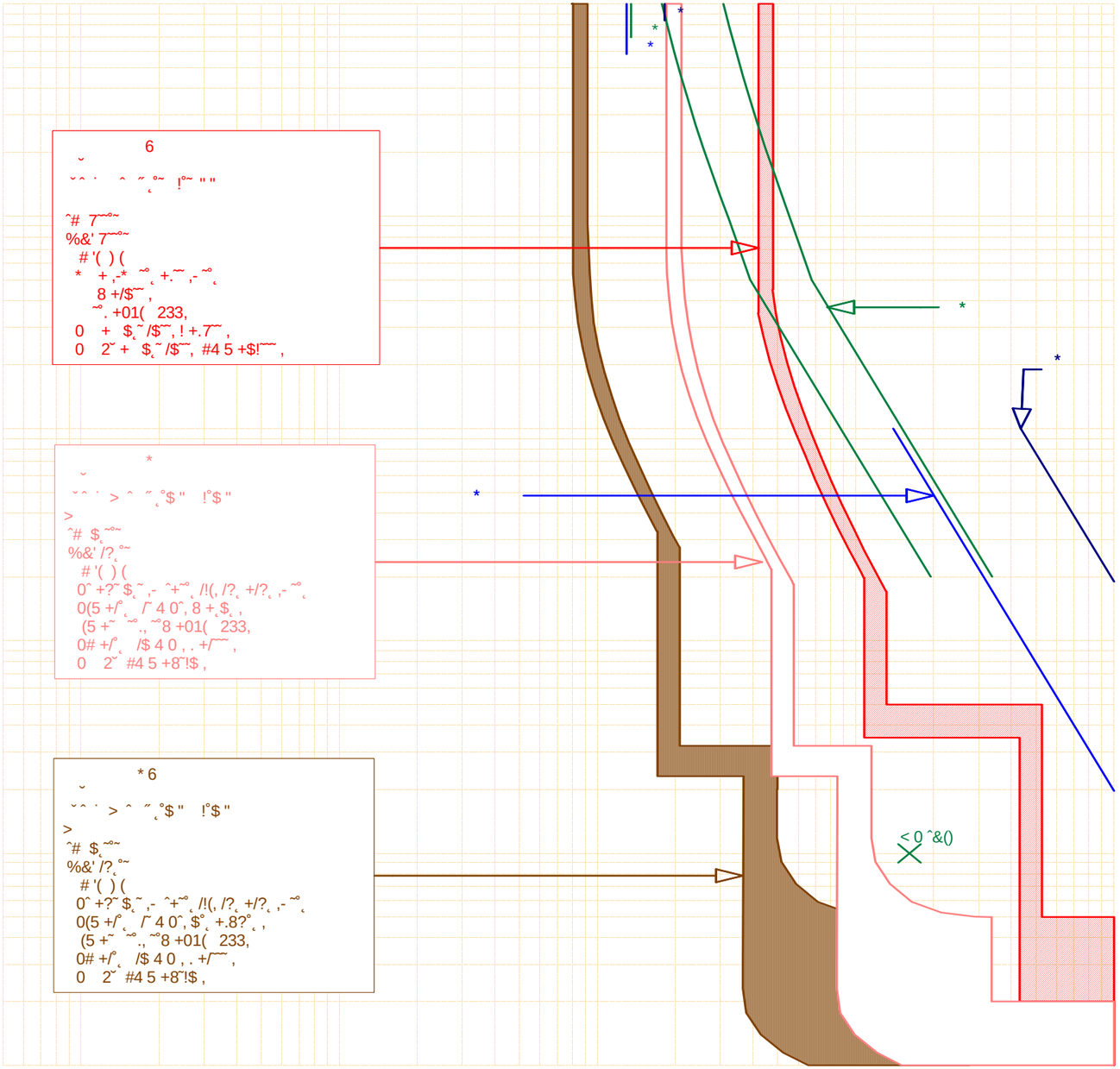
6
˘
˘^ ˙ ^ ˝ ˚˜ !˚˜ " "
˜# 7˜˜˚˜
%&' 7˜˜˚˜
'( ) (
* + ,-* ˜˚ ˛ +.˜˜ ,- ˜˚ ˛
8 +/$˜˜ ,
˜˚. +01(233,
0 + $.˛˜ /$˜˜, ! +.7˜˜ ,
0 2˘ + $.˛˜ /$˜˜, #4 5 +$!˜˜ ,
*
˘
˘^ ˙ > ^ ˝ ˛˚$ " !˚$ "
>
˜# $.˛˜˚˜
%&' /?.˛˚˜
'( ) (
0^ +?˜ $.˛˜ ,- ^+˜˚ ˛ /!(, /?.˛ +/?.˛ ,- ˜˚ ˛
0(5 +/˚ ˛ /˜ 4 0˜, 8 +.$.˛ ,
(5 +˜ ˜˚ ., ˜˚8 +01(233,
0# +/˚ ˛ /$ 4 0 , . +/˜˜ ,
0 2˘ #4 5 +8˜!$,
* 6
˘
˘^ ˙ > ^ ˝ ˛˚$ " !˚$ "
>
˜# $.˛˜˚˜
%&' /?.˛˚˜
'( ) (
0^ +?˜ $.˛˜ ,- ^+˜˚ ˛ /!(, /?.˛ +/?.˛ ,- ˜˚ ˛
0(5 +/˚ ˛ /˜ 4 0˜, $˚ ˛ +.8?˚ ˛ ,
(5 +˜ ˜˚ ., ˜˚8 +01(233,
0# +/˚ ˛ /$ 4 0 , . +/˜˜ ,
0 2˘ #4 5 +8˜!$,
< 0 ˜&()

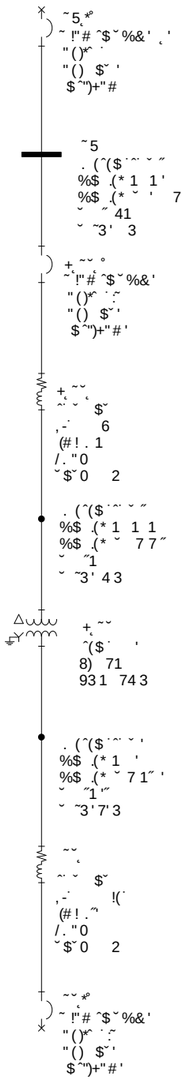
˜5 *˚
˜ !"# ˜$˘%&' ˛ '
"()*˜ ˙
"() $˘ '
$˜")+"#
˜5
. (˜($ ˙˜ ˘ ˝
%$.(* 1 1 '
%$.(* ˘ ' 7
˘ ˝ 41
˘ ˜3' 3
+ ˜˘ ˚
˜ !"# ˜$˘%&'
"()*˜ ˙˝
"() $˘ '
$˜")+"#'
+ ˜˘
˜˙ ˘ ˛ $˘
,-˙ 6
(#! . 1
/. "0
˘$˜0 2
. (˜($ ˙˜ ˘ ˝
%$.(* 1 1 1
%$.(* ˘ 7 7˝
˘ ˜1
˘ ˜3' 4 3
+ ˜˘
˜($˙ '
8) 71
93 1 74 3
. (˜($ ˙˜ ˘ '
%$.(* 1 '
%$.(* ˘ 7 1˝ '
˘ ˜1 '˝
˘ ˜3 '7'3
˜˘
˜˙ ˘ ˛ $˘
,-˙ !(˙
(#! . ˜˙
/. "0
˘$˜0 2
˜˘ *˚
˜ !"# ˜$˘%&'
"()*˜ ˙˝
"() $˘ '
$˜")+"#'

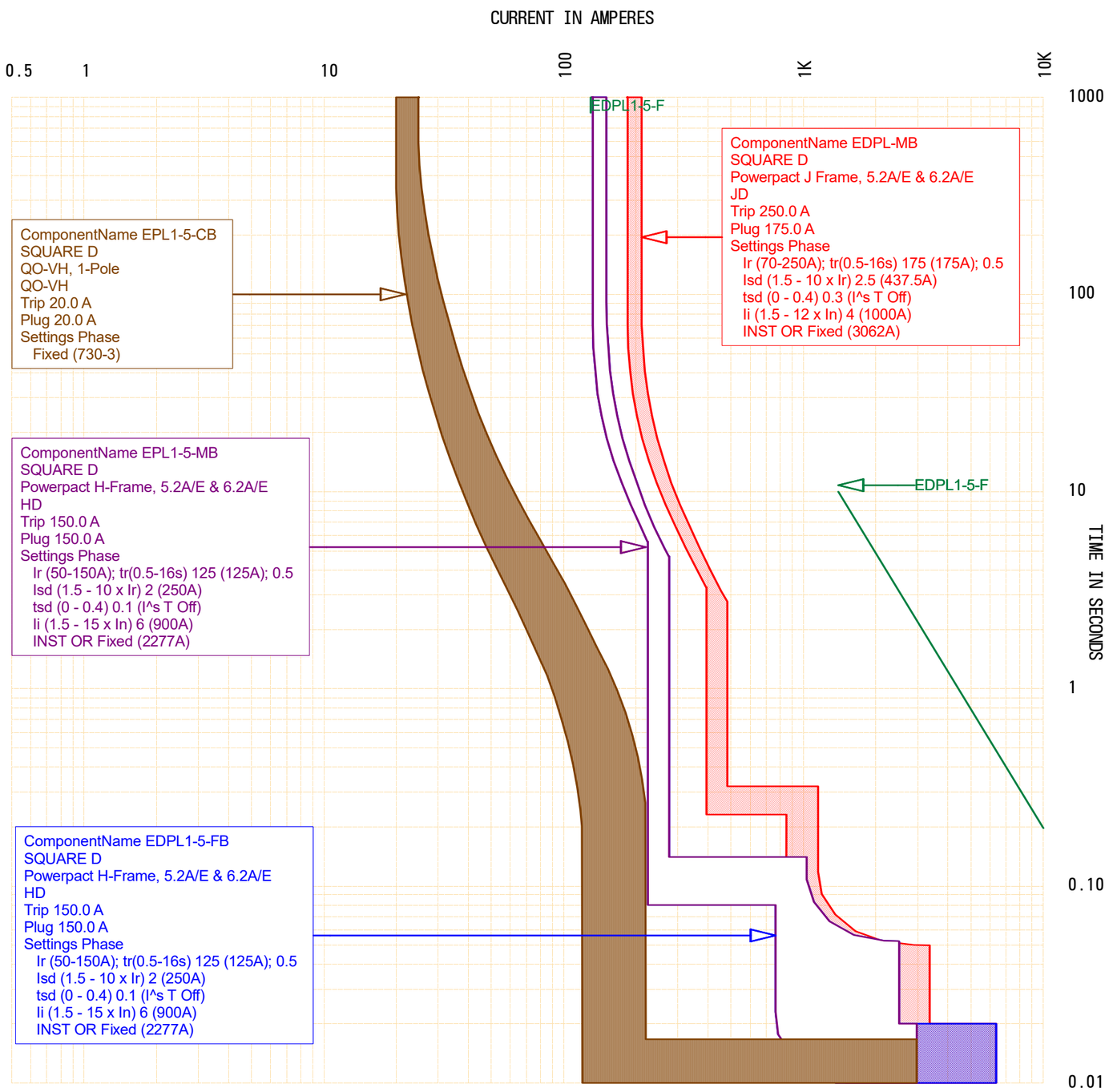

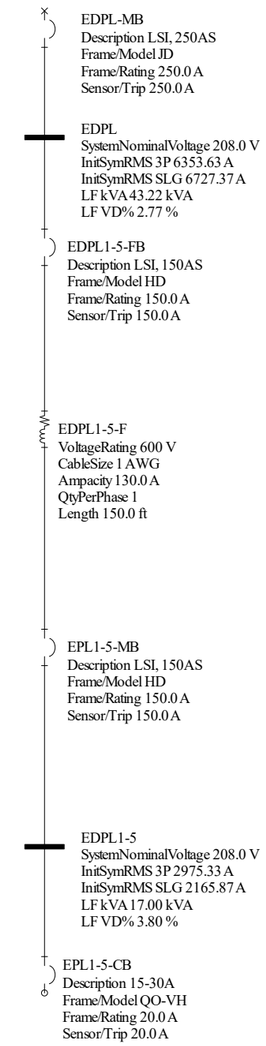

TCC: Study 8 - Typical 208V Essential Branch Panel Board Current Scale x 1 Reference Voltage: 208

Appendix 3.7

AC Arc Flash Analysis

Arc Flash Evaluation - Worst Case Scenario Report

Bus Name	Protective Device Name	Bus kV	Bus Bolted Fault (kA)	Bus Arcing Fault (kA)	Prot Dev Bolted Fault (kA)	Prot Dev Arcing Fault (kA)	Trip/ Delay Time (sec.)	Breaker Opening Time/Tol (sec.)	Equip Type	Electrode Config	Box Width (in)	Box Height (in)	Box Depth (in)	Gap (mm)	Arc Flash Boundary (in)	Working Distance (in)	Incident Energy (cal/cm2)	PPE Level / Notes (*N)	Label #	Cable Length From Trip Device (ft)	Incident Energy at Low Marginal	Incident Energy at High Marginal	User Notes	User Notes2	User Notes3
EDPH	EDPH-MB	0.48	13.82	10.64	13.82	10.64	0.05	0.0000	PNL	VCB	12	14	10	25	18	18	1.22	Level 3 (*S1)	# 0001						
EDPL	EDPL-MB	0.208	2.03	0.80	2.03	0.80	0.2	0.0000	PNL	VCB	12	14	10	25	8	18	0.34	Level 0 (*S2)	# 0002						
EDPL1-2	EPL1-2-MB	0.208	2.98	1.05	2.98	1.05	0.0983	0.0000	PNL	VCB	12	14	10	25	6	18	0.22	Level 0 (*N3) (*S1)	# 0003						
EDPL1-3	EPL1-3-MB	0.208	3.36	1.20	3.36	1.20	0.0802	0.0000	PNL	VCB	12	14	10	25	6	18	0.21	Level 0 (*N3) (*S1)	# 0004						
EDPL1-4	EPL1-4-MB	0.208	2.76	0.97	2.76	0.97	0.14	0.0000	PNL	VCB	12	14	10	25	7	18	0.29	Level 0 (*N3) (*S1)	# 0005						
EDPL1-5	EPL1-5-MB	0.208	2.98	1.05	2.98	1.05	0.0983	0.0000	PNL	VCB	12	14	10	25	6	18	0.22	Level 0 (*N3) (*S1)	# 0006						
EPH1	EPH1-MB	0.48	13.16	10.14	13.16	10.14	0.02	0.0000	PNL	VCB	12	14	10	25	10	18	0.46	Level 0 (*S1)	# 0007						
EPH2	EPH2-MB	0.48	13.16	10.14	13.16	10.14	0.02	0.0000	PNL	VCB	12	14	10	25	10	18	0.46	Level 0 (*S1)	# 0008						
EPL1-1	EPL1-1-MB	0.208	5.97	2.25	5.97	2.25	0.0536	0.0000	PNL	VCB	12	14	10	25	7	18	0.27	Level 0 (*N3) (*S1)	# 0009						
GDP	GEN-MB	0.48	1.19	0.82	1.19	0.82	0.05	0.0000	PNL	VCB	12	14	10	25	3	18	0.08	Level 0 (*S2)	# 0010						
NPH1	NPH1-MB	0.48	7.06	5.32	7.06	5.32	0.02	0.0000	PNL	VCB	12	14	10	25	6	18	0.23	Level 0 (*S1)	# 0010						
NPH2	NPH2-MB	0.48	7.97	6.03	7.97	6.03	0.02	0.0000	PNL	VCB	12	14	10	25	7	18	0.27	Level 0 (*S1)	# 0011						
NPH3	NPH3-MB	0.48	9.51	7.25	9.51	7.25	0.02	0.0000	PNL	VCB	12	14	10	25	8	18	0.32	Level 0 (*S1)	# 0012						
NPH4	NPH4-MB	0.48	9.09	6.92	9.09	6.92	0.02	0.0000	PNL	VCB	12	14	10	25	8	18	0.31	Level 0 (*S1)	# 0013						
NPL1	NPL1-MB	0.208	5.58	2.42	5.58	2.42	0.08	0.0000	PNL	VCB	12	14	10	25	9	18	0.43	Level 0 (*S1)	# 0017						
NPL2	NPL2-MB	0.208	5.75	2.51	5.75	2.51	0.08	0.0000	PNL	VCB	12	14	10	25	10	18	0.45	Level 0 (*S1)	# 0017						
NPL3	NPL3-MB	0.208	5.58	2.42	5.58	2.42	0.08	0.0000	PNL	VCB	12	14	10	25	9	18	0.43	Level 0 (*S1)	# 0017						
NPL4	NPL4-MB	0.208	4.89	2.10	4.89	2.10	0.08	0.0000	PNL	VCB	12	14	10	25	9	18	0.37	Level 0 (*S1)	# 0017						
SEDP	ELEV-FB	0.48	14.21	10.95	0.15	0.12	0.0833	0.0000	PNL	VCB	12	14	10	25	35	18	2.10	Level 3 (*S1)							
SEDP	SEDP-MB	0.48	14.21	10.95	14.06	10.84	0.14	0.0000	PNL	VCB	12	14	10	25	35	18	3.51	Level 3 (*S1)	# 0018						
Level 0: No Arc-rated PPE Required	0.0 - 1.2 cal/cm^2																#Level 0 = 17	(*N3) - Arcing Current Low Tolerances Used							
Level 3: Arc-rated shirt & pants or arc-rated coverall or arc-rated arc flash suit	1.2 - 12.0 cal/cm^2																#Level 3 = 2								
Level 4: Arc-rated shirt & pants or arc-rated coverall or arc-rated arc flash suit	12.0 - 999.0 cal/cm^2																#Equip Eval Failed = 0								
Level Dangerous!: DO NOT WORK ON LIVE!	999.0 - 9999.0 cal/cm^2																#Bus Equip Eval Failed =	IEEE 1584 2018 Bus Report - Comprehensive							
For additional information refer to NFPA 70 E, Standard for Electrical Safety in the Workplace.	Device with 80% Cleared																	(*S1) - UTILITY POWER PATH							
Level 0: No Arc-rated PPE Required, Safety Glasses or Goggles + Ear Canal Inserts, Leather Gloves, Safety glasses, > 50V voltage rated tools + Class 0 (minimum) gloves, Dielectric shoes or insulating mat (step and touch potential).																		(*S2) - GENERATOR POWER PATH							
Level 3: Arc-rated shirt & pants or arc-rated coverall or arc-rated arc flash suit , Hardhat + Arc-rated hard hat liner + Safety Glasses or Goggles + Ear Canal Inserts, Leather Gloves, Leather footwear, Safety glasses, electrically rated hard hat with hood and face shield. Hearing protection., Arc-rated shirt (long-sleeve) plus Arc-rated pants (long) or Arc-rated coverall, or arc rated arc flash suit jacket, pants, & hood, Arc-rated rainwear as needed., > 50V voltage rated tools + Class 0 (minimum) gloves and leather protectors (flash)., Leather shoes (flash) as needed. Dielectric shoes or insulating mat (step and touch potential).																									
Level 4: Arc-rated shirt & pants or arc-rated coverall or arc-rated arc flash suit , Hardhat + Arc-rated hard hat liner + Safety Glasses or Goggles + Ear Canal Inserts, Arc-rated Gloves, Leather footwear, Safety glasses, electrically rated hard hat with hood and face shield. Hearing protection., Arc-rated shirt (long-sleeve) plus Arc-rated pants (long) or Arc-rated coverall, or arc rated arc flash suit jacket, pants, & hood, Arc-rated rainwear as needed., > 50V voltage rated tools + Class 0 (minimum) gloves and leather protectors (flash)., Leather shoes (flash) as needed. Dielectric shoes or insulating mat (step and touch potential).																									
Level Dangerous!: DO NOT WORK ON LIVE!, DO NOT WORK ON LIVE!, DO NOT WORK ON LIVE!, DO NOT WORK ON LIVE!, DO NOT WORK ON LIVE!																									

Lighting Calculations

1. **Exterior Lighting Calculations**

   E900 - PARKING LOT LIGHTING CALCULATION EXTERIOR

2. **Interior Lighting Calculations**

   E901 - FIRST FLOOR - LIGHTING CALCULATION PLAN - PART 2

   E902 - FIRST FLOOR - LIGHTING CALCULATION PLAN - PART 2

   E903 - SECOND FLOOR - LIGHTING CALCULATION PLAN - PART 1

   E904 - SECOND FLOOR - LIGHTING CALCULATION PLAN - PART 2

3. **Interior Emergency Egress Lighting Calculations**

   E905 - FIRST FLOOR - EGRESS LIGHTING CALCULATION PLAN - PART 1

   E906 - FIRST FLOOR - EGRESS LIGHTING CALCULATION PLAN - PART 2

   E907 - SECOND FLOOR - EGRESS LIGHTING CALCULATION PLAN - PART 1

   E908 - SECOND FLOOR - EGRESS LIGHTING CALCULATION PLAN - PART 2

4. **Lighting Calculations Summary**

   E909 - LIGHTING CALCULATIONS TABULAR SUMMARY

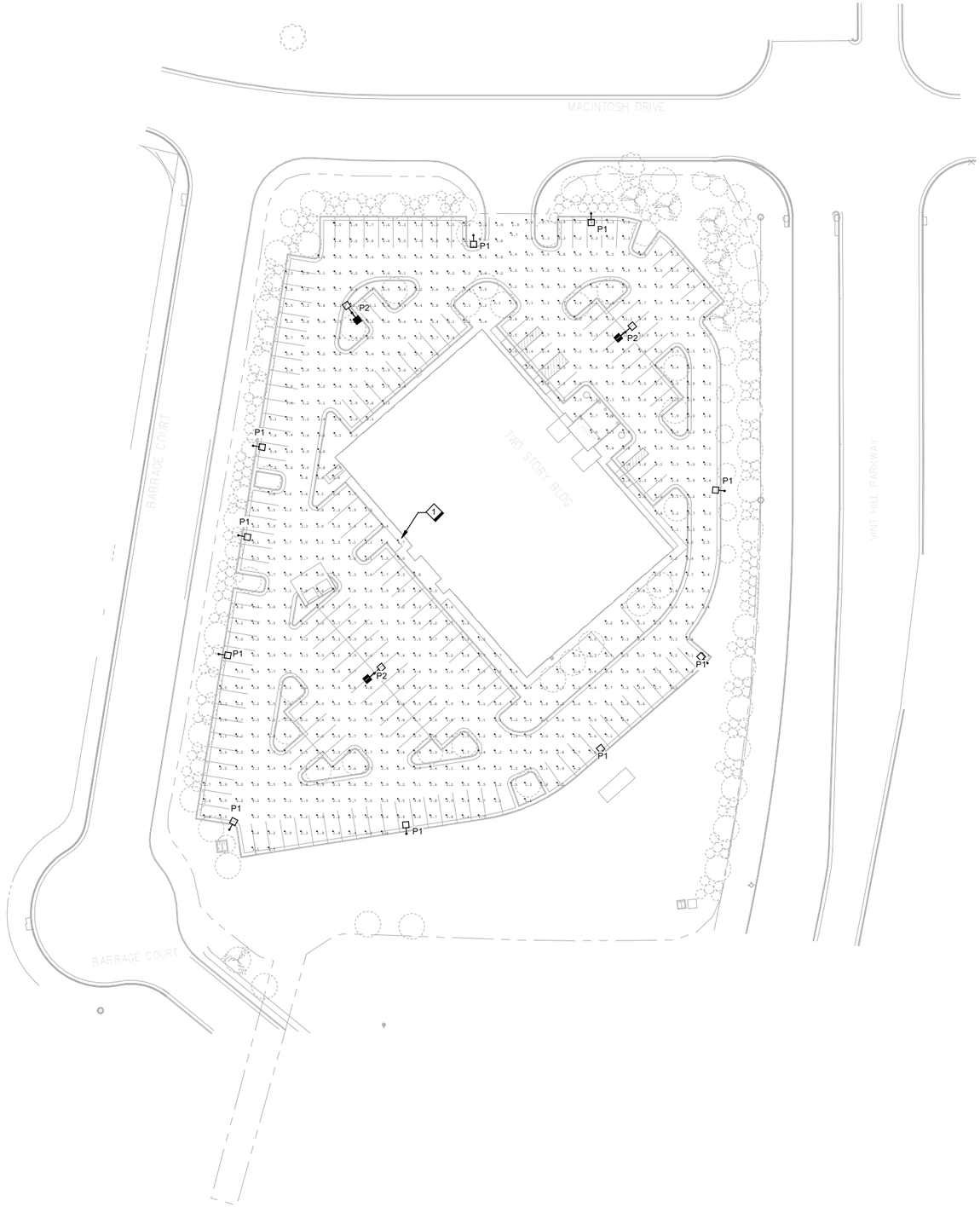

A1 PARKING LOT LIGHTING CALCULATION EXTERIOR

E900

1" = 40'-0"

EXTERIOR LIGHTING CALCULATIONS TABULAR SUMMARY

AREA	TYPE	UNITS	AVG.	MAX.	MIN.	AVG/MIN	MAX/MIN
NORTHEAST PARKING LOT	ILLUMINANCE	FC	3.85	12.8	1.1	3.50	11.64
NORTHWEST PARKING LOT	ILLUMINANCE	FC	4.04	12.0	1.0	4.04	12.00
SOUTHEAST PARKING LOT	ILLUMINANCE	FC	3.03	8.3	1.1	2.75	7.55
SOUTHWEST PARKING LOT	ILLUMINANCE	FC	3.05	9.8	1.0	3.05	9.80

GENERAL SHEET NOTES

A. DRAWING IS DEVELOPED BASED ON AS BUILT DRAWINGS PROVIDED. VERIFY EXISTING CONDITION, INCLUDING BUT NOT LIMITED TO, FIXTURE LOCATION, CIRCUITING AND WIRING, AND LIGHTING CONTROL SYSTEM, PRIOR TO NEW WORK.

B. EXISTING WIRING TO REMAIN FOR RECONNECTION TO NEW LED FIXTURE.

C. EXISTING CONTROL SYSTEM TO REMAIN IN PLACE. VERIFY EXISTING LIGHTING CONTROL SYSTEM TO ENSURE RATING IS ADEQUATE AND COMPATIBLE TO THE NEW FIXTURE.

D. REFER TO LIGHTING FIXTURE SCHEDULE, DRAWING E-550, FOR FIXTURE TYPE.

SHEET NOTES

1. FOOT-CANDLE ILLUMINANCE POINTS SHOWN AROUND BUILDING INCLUDE THE WALLPACK LUMENS. REFER TO FIRST FLOOR LIGHTING DRAWINGS E100 AND E101 FOR WALLPACK FIXTURE LOCATIONS.

JACOBS

LIGHTING CALCULATIONS

DESIGNED BY: D. RUSTAMOVA
DRAWN BY: R.KAUR
CHECKED BY: M. BECKER
SUBMITTED BY: JACOBS ENGINEERING
ISSUE DATE: 03/09/2022

FEDERAL AVIATION ADMINISTRATION
WARRENTON ADMINISTRATIVE BUILDING
PARKING LOT LIGHTING CALCULATION EXTERIOR

SHEET ID

E900

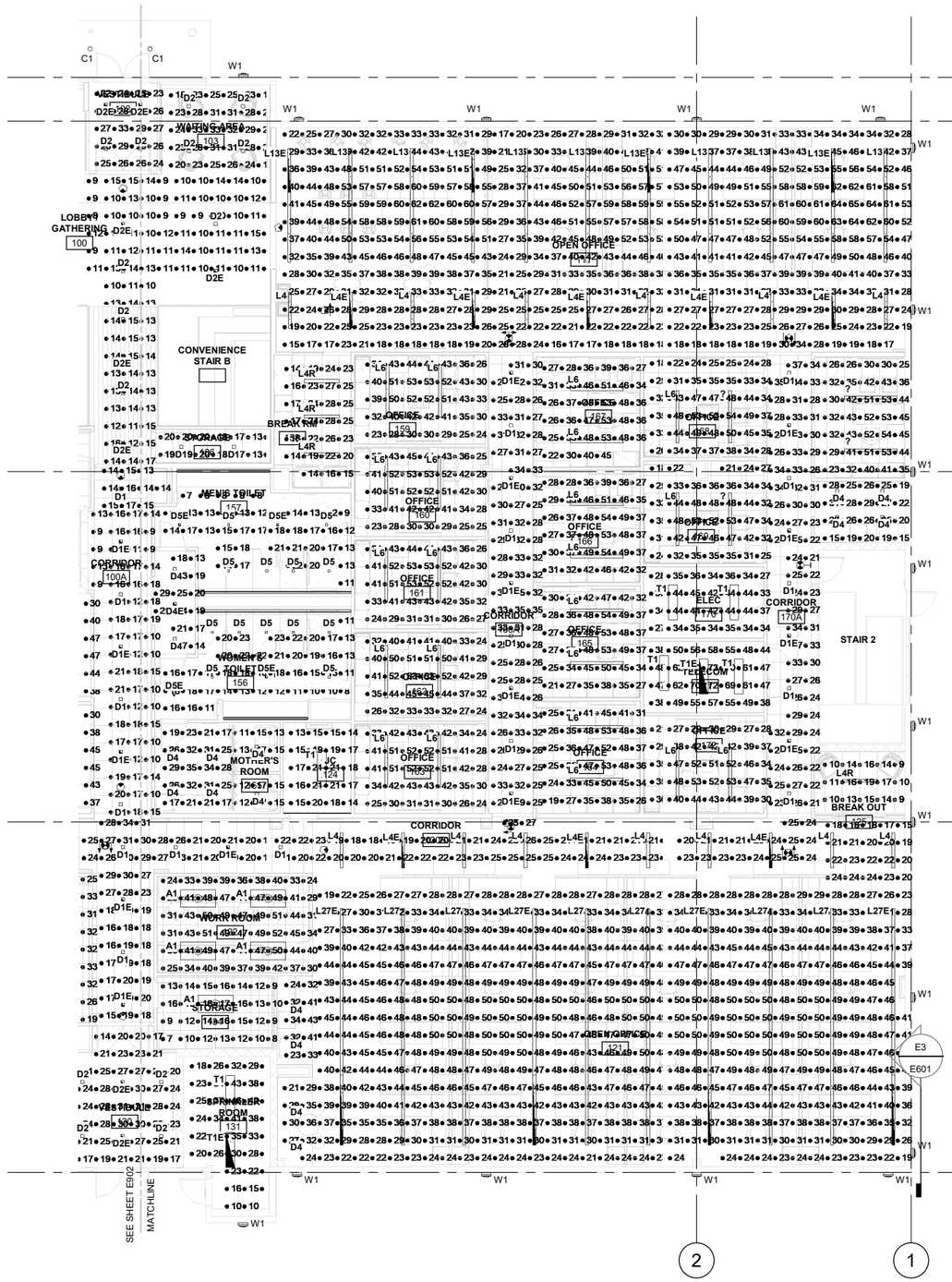

A1 FIRST FLOOR - LIGHTING CALCULATION PLAN - PART 1

E901

1/8" = 1'-0"

GENERAL SHEET NOTES

A. REFER TO DRAWING E550 FOR LIGHTING FIXTURE SCHEDULE.

B. REFER TO DRAWING E909 FOR LIGHTING CALCULATIONS AND LIGHTING POWER DENSITY TABULARY SUMMARY.

C. FOR EMERGENCY EGRESS LIGHTING FIXTURES,THE EMERGENCY DRIVER SHALL BE CONNECTED TO THE UNSWITCHED PORTION OF THE BRANCH CIRCUIT AHEAD OF LOCAL SWITCH CONTROLS. EMERGENCY DRIVER TO ILLUMINATE FIXTURE UPON LOSS OF POWER INDEPENDENT OF LOCAL SWITCH CONTROLS.

LIGHTING CALCULATIONS

AREA	HORIZONTAL ILLUMINANCE CALCULATION POINTS	REMARKS
OPEN OFFICE	AT DESKTOP 2'-6" AFF	ALL FIXTURES DIMMED AT 50%
CONFERENCE / CLOSED OFFICE / BREAK ROOMS	AT 2'-6" AFF	ALL LINEAR FIXTURES IN CONFERENCE ROOMS DIMMED AT 50%
CORRIDOR / VESTIBULE / STORAGE / RESTROOMS	AT FLOOR	
TELECOM / ELECTRICAL / MECHANICAL ROOMS	AT 3'-0" AFF	

JACOBS

LIGHTING CALCULATIONS

DESIGNED BY: D. RUSTAMOVA
DRAWN BY: R.KAUR
CHECKED BY: M. BECKER
SUBMITTED BY: JACOBS ENGINEERING
ISSUE DATE: 03/09/2022

FEDERAL AVIATION ADMINISTRATION
WARRENTON ADMINISTRATIVE BUILDING
FIRST FLOOR - LIGHTING CALCULATION PLAN - PART 1

SHEET ID

E901

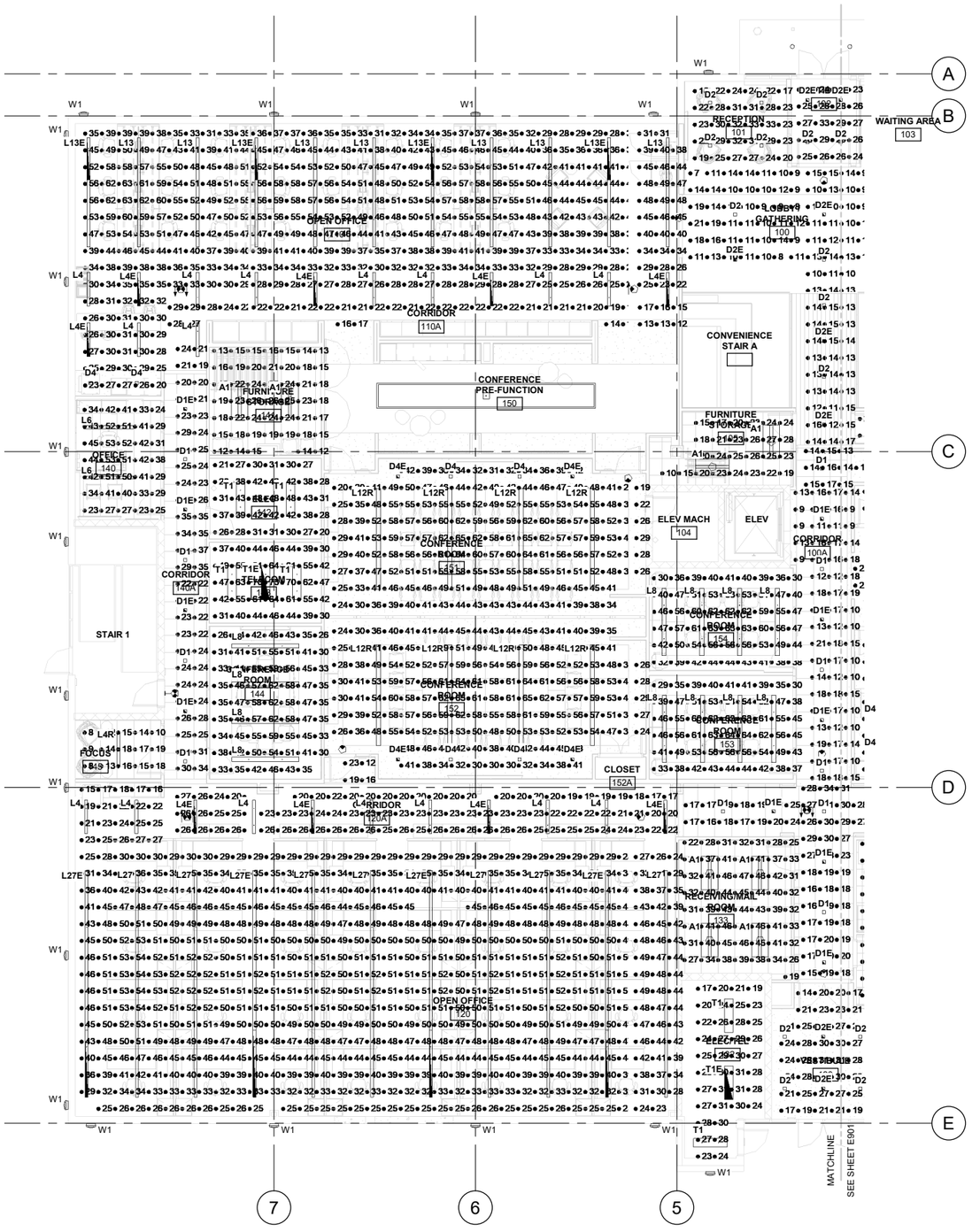

A1 FIRST FLOOR - LIGHTING CALCULATION PLAN - PART 2

E902

1/8" = 1'-0"

GENERAL SHEET NOTES

A. REFER TO DRAWING E550 FOR LIGHTING FIXTURE SCHEDULE.

B. REFER TO DRAWING E909 FOR LIGHTING CALCULATIONS AND LIGHTING POWER DENSITY TABULARY SUMMARY.

C. FOR EMERGENCY EGRESS LIGHTING FIXTURES,THE EMERGENCY DRIVER SHALL BE CONNECTED TO THE UNSWITCHED PORTION OF THE BRANCH CIRCUIT AHEAD OF LOCAL SWITCH CONTROLS. EMERGENCY DRIVER TO ILLUMINATE FIXTURE UPON LOSS OF POWER INDEPENDENT OF LOCAL SWITCH CONTROLS.

LIGHTING CALCULATIONS

AREA	HORIZONTAL ILLUMINANCE CALCULATION POINTS	REMARKS
OPEN OFFICE	AT DESKTOP 2'-6" AFF	ALL FIXTURES DIMMED AT 50%
CONFERENCE / CLOSED OFFICE / BREAK ROOMS	AT 2'-6" AFF	ALL LINEAR FIXTURES IN CONFERENCE ROOMS DIMMED AT 50%
CORRIDOR / VESTIBULE / STORAGE / RESTROOMS	AT FLOOR	
TELECOM / ELECTRICAL / MECHANICAL ROOMS	AT 3'-0" AFF	

JACOBS

LIGHTING CALCULATIONS

DESIGNED BY: D. RUSTAMOVA
DRAWN BY: R.KAUR
CHECKED BY: M. BECKER
SUBMITTED BY: JACOBS ENGINEERING
ISSUE DATE: 03/09/2022

FEDERAL AVIATION ADMINISTRATION
WARRENTON ADMINISTRATIVE BUILDING

FIRST FLOOR - LIGHTING CALCULATION PLAN - PART 2

SHEET ID

E902

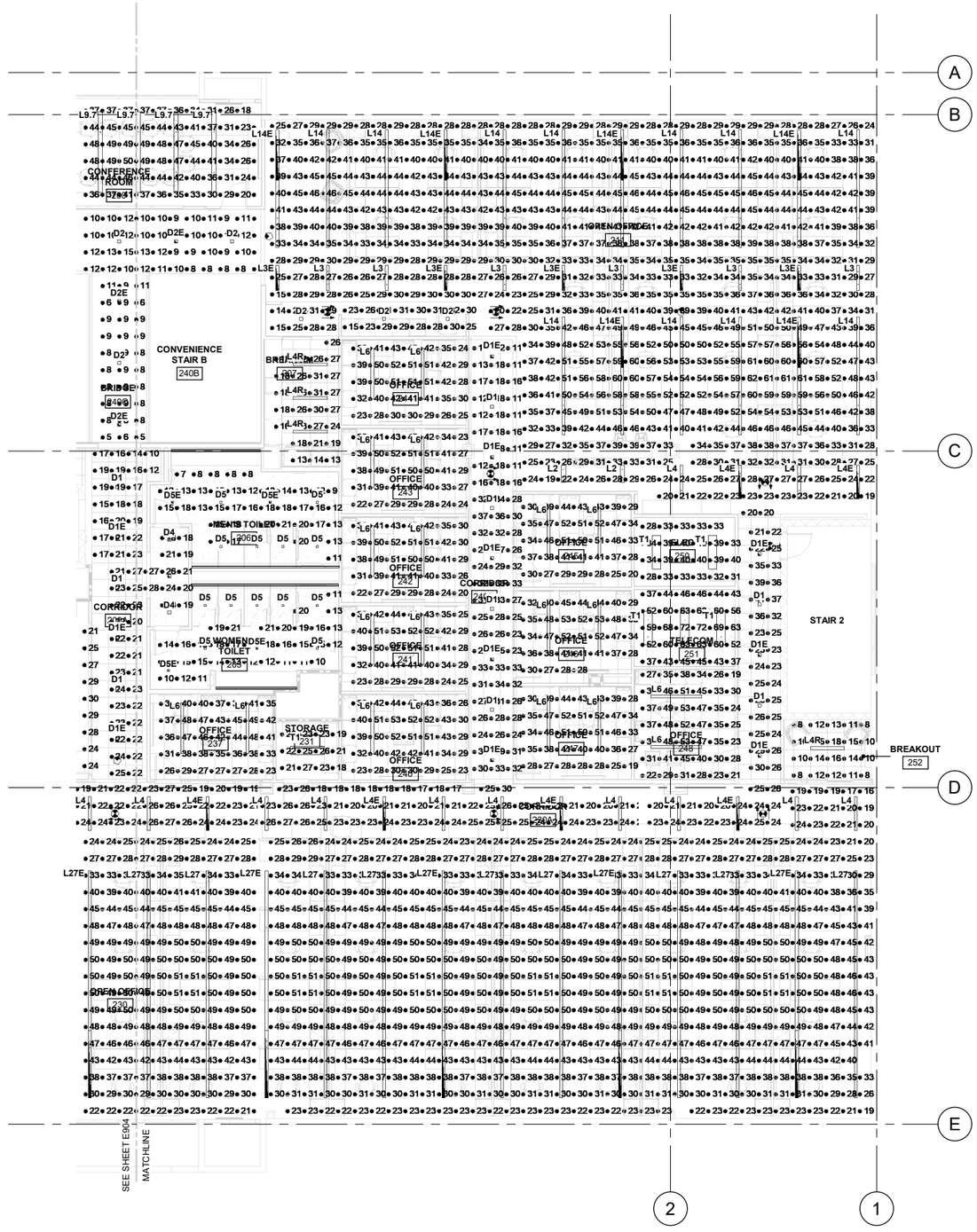

GENERAL SHEET NOTES

A. REFER TO DRAWING E550 FOR LIGHTING FIXTURE SCHEDULE.

B. REFER TO DRAWING E909 FOR LIGHTING CALCULATIONS AND LIGHTING POWER DENSITY TABULARY SUMMARY.

C. FOR EMERGENCY EGRESS LIGHTING FIXTURES,THE EMERGENCY DRIVER SHALL BE CONNECTED TO THE UNSWITCHED PORTION OF THE BRANCH CIRCUIT AHEAD OF LOCAL SWITCH CONTROLS. EMERGENCY DRIVER TO ILLUMINATE FIXTURE UPON LOSS OF POWER INDEPENDENT OF LOCAL SWITCH CONTROLS.

LIGHTING CALCULATIONS

AREA	HORIZONTAL ILLUMINANCE CALCULATION POINTS	REMARKS
OPEN OFFICE	AT DESKTOP 2'-6" AFF	ALL FIXTURES DIMMED AT 50%
CONFERENCE / CLOSED OFFICE / BREAK ROOMS	AT 2'-6" AFF	ALL LINEAR FIXTURES IN CONFERENCE ROOMS DIMMED AT 50%
CORRIDOR / VESTIBULE / STORAGE / RESTROOMS	AT FLOOR	
TELECOM / ELECTRICAL / MECHANICAL ROOMS	AT 3'-0" AFF	

A1 E903 **SECOND FLOOR - LIGHTING CALCULATION PLAN - PART 1**

1/8" = 1'-0"

JACOBS

LIGHTING CALCULATIONS

DESIGNED BY: D. RUSTAMOVA
DRAWN BY: R.KAUR
CHECKED BY: M. BECKER
SUBMITTED BY: JACOBS ENGINEERING
ISSUE DATE: 03/09/2022

FEDERAL AVIATION ADMINISTRATION
WARRENTON ADMINISTRATIVE BUILDING
SECOND FLOOR - LIGHTING CALCULATION PLAN - PART 1

SHEET ID

E903

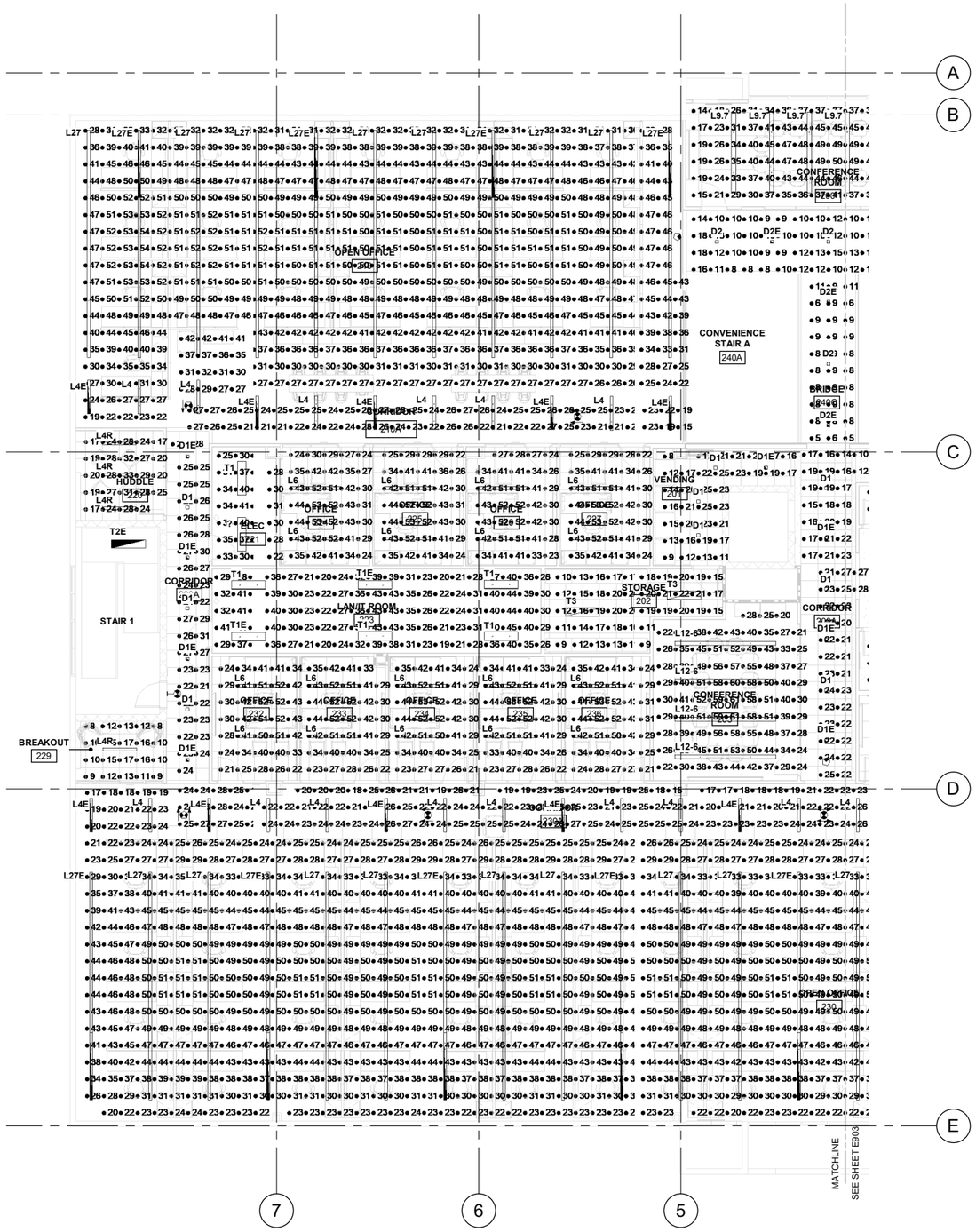

A1 E904 **SECOND FLOOR - LIGHTING CALCULATION PLAN - PART 2**

1/8" = 1'-0"

GENERAL SHEET NOTES

A. REFER TO DRAWING E550 FOR LIGHTING FIXTURE SCHEDULE.

B. REFER TO DRAWING E909 FOR LIGHTING CALCULATIONS AND LIGHTING POWER DENSITY TABULARY SUMMARY.

C. FOR EMERGENCY EGRESS LIGHTING FIXTURES,THE EMERGENCY DRIVER SHALL BE CONNECTED TO THE UNSWITCHED PORTION OF THE BRANCH CIRCUIT AHEAD OF LOCAL SWITCH CONTROLS. EMERGENCY DRIVER TO ILLUMINATE FIXTURE UPON LOSS OF POWER INDEPENDENT OF LOCAL SWITCH CONTROLS.

LIGHTING CALCULATIONS

AREA	HORIZONTAL ILLUMINANCE CALCULATION POINTS	REMARKS
OPEN OFFICE	AT DESKTOP 2'-6" AFF	ALL FIXTURES DIMMED AT 50%
CONFERENCE / CLOSED OFFICE / BREAK ROOMS	AT 2'-6" AFF	ALL LINEAR FIXTURES IN CONFERENCE ROOMS DIMMED AT 50%
CORRIDOR / VESTIBULE / STORAGE / RESTROOMS	AT FLOOR	
TELECOM / ELECTRICAL / MECHANICAL ROOMS	AT 3'-0" AFF	

JACOBS

LIGHTING CALCULATIONS

DESIGNED BY: D. RUSTAMOVA
DRAWN BY: R.KAUR
CHECKED BY: M. BECKER
SUBMITTED BY: JACOBS ENGINEERING
ISSUE DATE: 03/09/2022

FEDERAL AVIATION ADMINISTRATION
WARRENTON ADMINISTRATIVE BUILDING
SECOND FLOOR - LIGHTING CALCULATION PLAN - PART 2

SHEET ID

E904

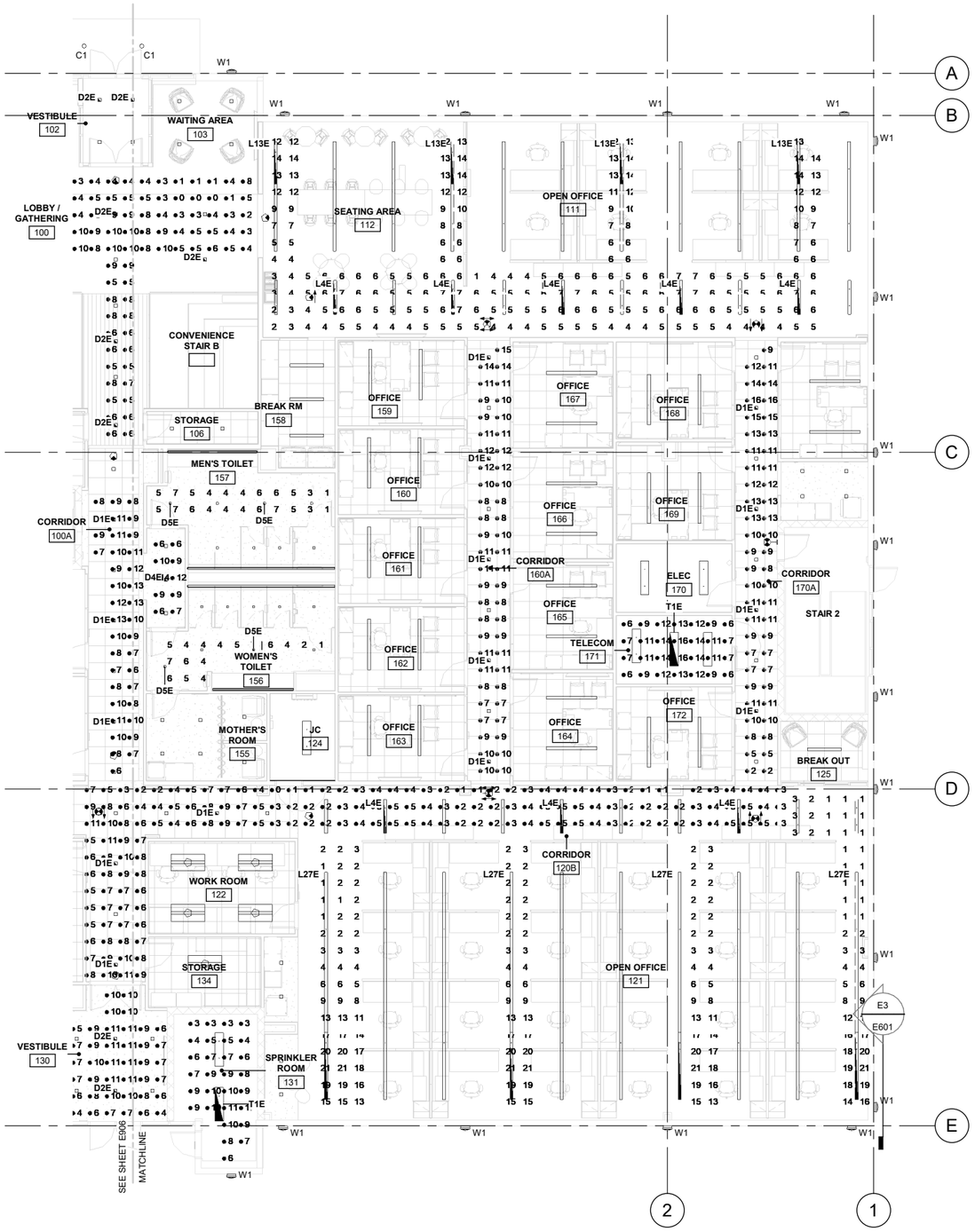

A1 E905 **FIRST FLOOR - EGRESS LIGHTING CALCULATION PLAN - PART 1**

1/8" = 1'-0"

GENERAL SHEET NOTES

A. REFER TO DRAWING E550 FOR LIGHTING FIXTURE SCHEDULE.

B. REFER TO DRAWING E909 FOR LIGHTING CALCULATIONS AND LIGHTING POWER DENSITY TABULARY SUMMARY.

C. FOR EMERGENCY EGRESS LIGHTING FIXTURES,THE EMERGENCY DRIVER SHALL BE CONNECTED TO THE UNSWITCHED PORTION OF THE BRANCH CIRCUIT AHEAD OF LOCAL SWITCH CONTROLS. EMERGENCY DRIVER TO ILLUMINATE FIXTURE UPON LOSS OF POWER INDEPENDENT OF LOCAL SWITCH CONTROLS.

JACOBS

LIGHTING CALCULATIONS

DESIGNED BY: D. RUSTAMOVA
DRAWN BY: R.KAUR
CHECKED BY: M. BECKER
SUBMITTED BY: JACOBS ENGINEERING
ISSUE DATE: 03/09/2022

FEDERAL AVIATION ADMINISTRATION
WARRENTON ADMINISTRATIVE BUILDING
FIRST FLOOR - EGRESS LIGHTING CALCULATION PLAN - PART 1

SHEET ID

E905

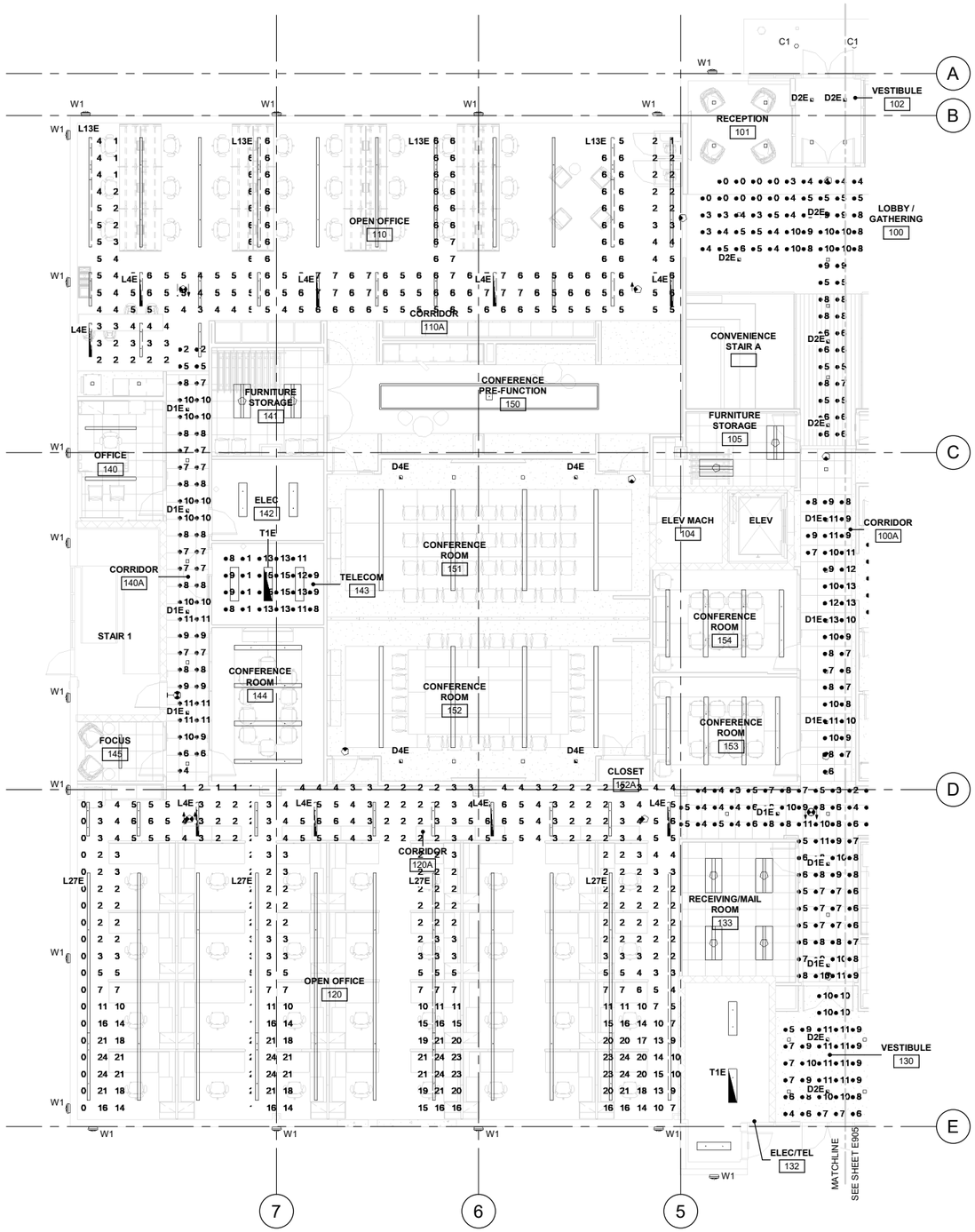

A1 FIRST FLOOR - EGRESS LIGHTING CALCULATION PLAN - PART 2

E906

1/8" = 1'-0"

GENERAL SHEET NOTES

A. REFER TO DRAWING E550 FOR LIGHTING FIXTURE SCHEDULE.

B. REFER TO DRAWING E909 FOR LIGHTING CALCULATIONS AND LIGHTING POWER DENSITY TABULARY SUMMARY.

C. FOR EMERGENCY EGRESS LIGHTING FIXTURES,THE EMERGENCY DRIVER SHALL BE CONNECTED TO THE UNSWITCHED PORTION OF THE BRANCH CIRCUIT AHEAD OF LOCAL SWITCH CONTROLS. EMERGENCY DRIVER TO ILLUMINATE FIXTURE UPON LOSS OF POWER INDEPENDENT OF LOCAL SWITCH CONTROLS.

JACOBS

LIGHTING CALCULATIONS

DESIGNED BY: D. RUSTAMOVA
DRAWN BY: R.KAUR
CHECKED BY: M. BECKER
SUBMITTED BY: JACOBS ENGINEERING
ISSUE DATE: 03/09/2022

FEDERAL AVIATION ADMINISTRATION
WARRENTON ADMINISTRATIVE BUILDING

FIRST FLOOR - EGRESS LIGHTING CALCULATION PLAN - PART 2

SHEET ID

E906

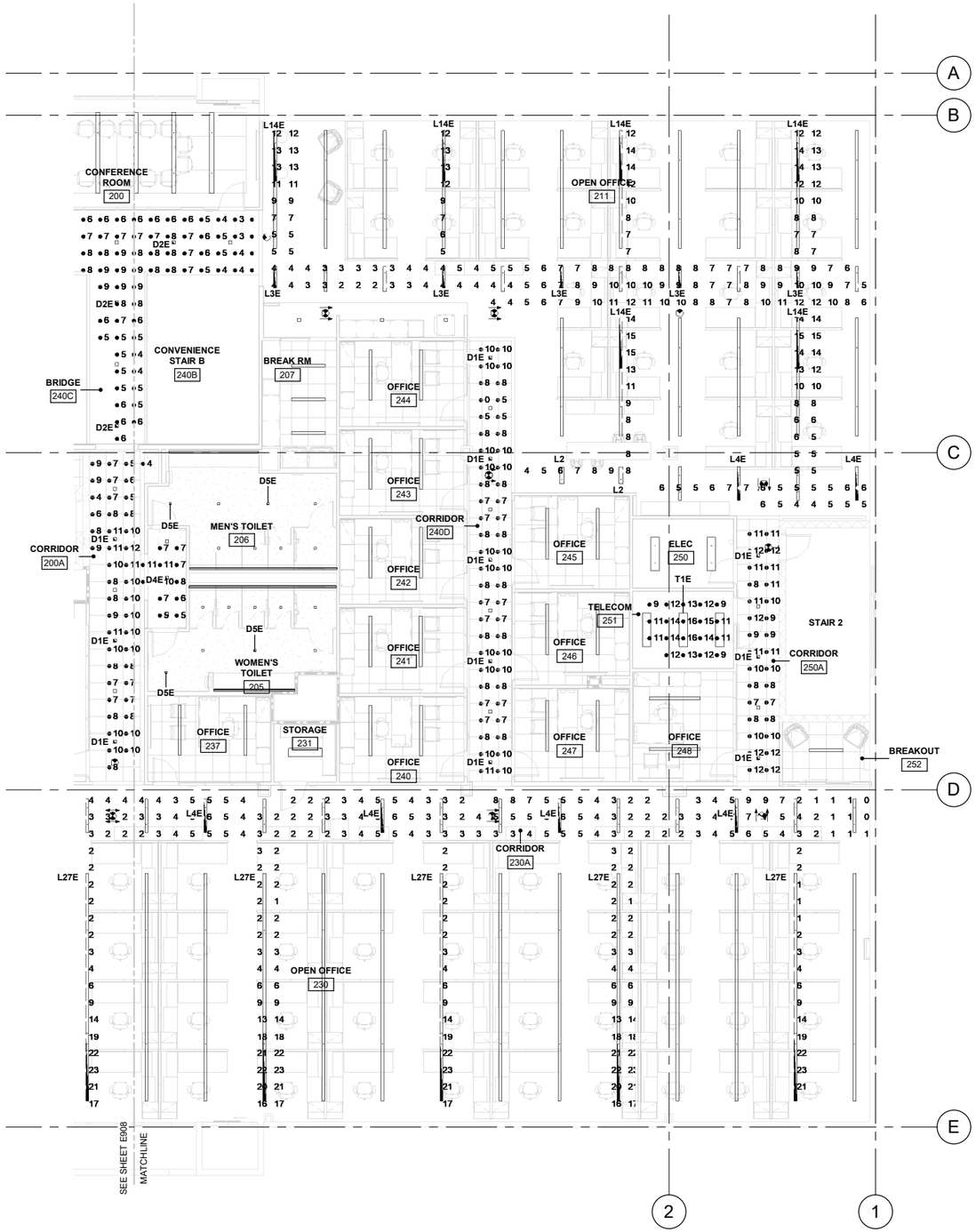

A1 SECOND FLOOR - EGRESS LIGHTING CALCULATION PLAN - PART 1

E907

1/8" = 1'-0"

GENERAL SHEET NOTES

A. REFER TO DRAWING E550 FOR LIGHTING FIXTURE SCHEDULE.

B. REFER TO DRAWING E909 FOR LIGHTING CALCULATIONS AND LIGHTING POWER DENSITY TABULARY SUMMARY.

C. FOR EMERGENCY EGRESS LIGHTING FIXTURES,THE EMERGENCY DRIVER SHALL BE CONNECTED TO THE UNSWITCHED PORTION OF THE BRANCH CIRCUIT AHEAD OF LOCAL SWITCH CONTROLS. EMERGENCY DRIVER TO ILLUMINATE FIXTURE UPON LOSS OF POWER INDEPENDENT OF LOCAL SWITCH CONTROLS.

JACOBS

LIGHTING CALCULATIONS

DESIGNED BY: D. RUSTAMOVA
DRAWN BY: R.KAUR
CHECKED BY: M. BECKER
SUBMITTED BY: JACOBS ENGINEERING
ISSUE DATE: 03/09/2022

FEDERAL AVIATION ADMINISTRATION
WARRENTON ADMINISTRATIVE BUILDING
SECOND FLOOR - EGRESS LIGHTING CALCULATION PLAN - PART 1

SHEET ID

E907

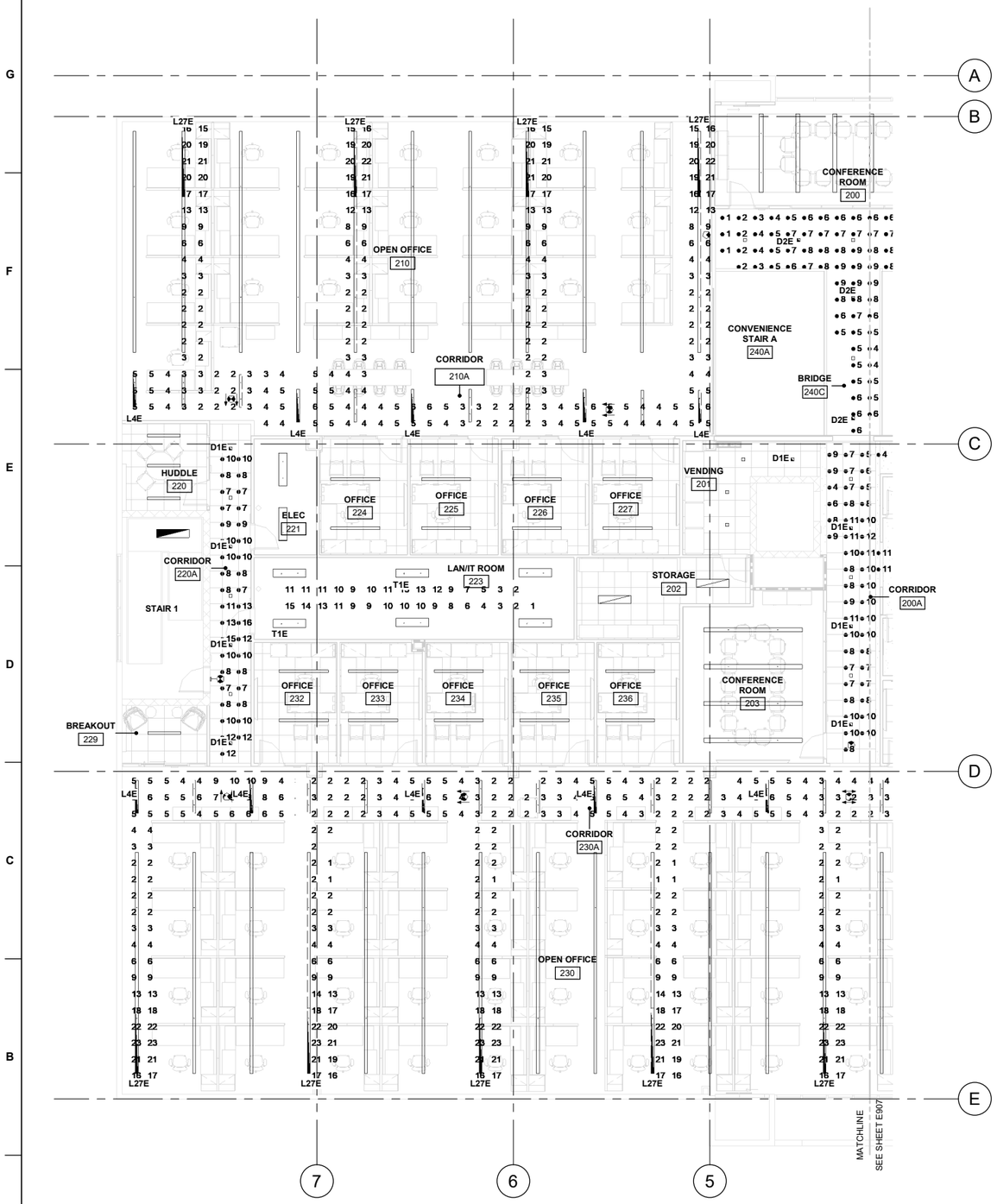

A1 SECOND FLOOR - EGRESS LIGHTING CALCULATION PLAN - PART 2

E908

1/8" = 1'-0"

GENERAL SHEET NOTES

A. REFER TO DRAWING E550 FOR LIGHTING FIXTURE SCHEDULE.

B. REFER TO DRAWING E909 FOR LIGHTING CALCULATIONS AND LIGHTING POWER DENSITY TABULARY SUMMARY.

C. FOR EMERGENCY EGRESS LIGHTING FIXTURES,THE EMERGENCY DRIVER SHALL BE CONNECTED TO THE UNSWITCHED PORTION OF THE BRANCH CIRCUIT AHEAD OF LOCAL SWITCH CONTROLS. EMERGENCY DRIVER TO ILLUMINATE FIXTURE UPON LOSS OF POWER INDEPENDENT OF LOCAL SWITCH CONTROLS.

JACOBS

LIGHTING CALCULATIONS

DESIGNED BY: D. RUSTAMOVA
DRAWN BY: R.KAUR
CHECKED BY: M. BECKER
SUBMITTED BY: JACOBS ENGINEERING
ISSUE DATE: 03/09/2022

FEDERAL AVIATION ADMINISTRATION
WARRENTON ADMINISTRATIVE BUILDING
SECOND FLOOR - EGRESS LIGHTING CALCULATION PLAN - PART 2

SHEET ID

E908

LIGHTING CALCULATION TABULAR SUMMARY

Calculation Points Name	Average	Maximum	Minimum	Avg/Min	Max/Min
BREAK OUT 125	13 fc	19 fc	9 fc	1.4	2.0
BREAK RM 158	21 fc	28 fc	14 fc	1.5	2.1
BREAK RM 207	23 fc	31 fc	13 fc	1.8	2.4
BREAKOUT 228	12 fc	17 fc	8 fc	1.5	2.2
BREAKOUT 252	12 fc	18 fc	8 fc	1.5	2.3
BRIDGE 240C	10 fc	18 fc	5 fc	1.9	3.4
CONFERENCE ROOM 144	44 fc	62 fc	25 fc	1.8	2.5
CONFERENCE ROOM 151	47 fc	65 fc	19 fc	2.4	3.4
CONFERENCE ROOM 152	47 fc	65 fc	24 fc	2.0	2.7
CONFERENCE ROOM 153	48 fc	64 fc	29 fc	1.6	2.2
CONFERENCE ROOM 154	48 fc	63 fc	30 fc	1.6	2.1
CONFERENCE ROOM 200	35 fc	50 fc	14 fc	2.5	3.6
CONFERENCE ROOM 203	41 fc	61 fc	20 fc	2.0	3.0
CORRIDOR 100A	15 fc	21 fc	9 fc	1.7	2.4
CORRIDOR 100B	15 fc	17 fc	13 fc	1.1	1.3
CORRIDOR 110A	21 fc	29 fc	12 fc	1.8	2.5
CORRIDOR 120A	23 fc	27 fc	12 fc	1.9	2.3
CORRIDOR 120B	22 fc	34 fc	15 fc	1.4	2.2
CORRIDOR 140A	26 fc	37 fc	19 fc	1.3	1.9
CORRIDOR 160A	30 fc	35 fc	24 fc	1.2	1.5
CORRIDOR 170A	28 fc	37 fc	21 fc	1.3	1.8
CORRIDOR 200A	21 fc	28 fc	10 fc	2.0	2.7
CORRIDOR 210A	24 fc	28 fc	15 fc	1.6	1.8
CORRIDOR 220A	25 fc	31 fc	21 fc	1.2	1.4
CORRIDOR 230A	23 fc	30 fc	15 fc	1.5	2.0
CORRIDOR 240A	24 fc	37 fc	11 fc	2.3	3.5
CORRIDOR 250	28 fc	41 fc	21 fc	1.3	1.9
CORRIDOR RESTROOM 100C	20 fc	29 fc	13 fc	1.6	2.2
ELEC 142	33 fc	48 fc	18 fc	1.8	2.7
ELEC 170	36 fc	44 fc	23 fc	1.5	1.9
ELEC 221	33 fc	41 fc	22 fc	1.5	1.8
ELEC 250	35 fc	40 fc	28 fc	1.3	1.4
ELEC/TEL 132	26 fc	31 fc	17 fc	1.6	1.9
FOCUS 145	14 fc	19 fc	8 fc	1.7	2.4
FURNITURE STORAGE 105	22 fc	28 fc	10 fc	2.1	2.7
FURNITURE STORAGE 141	19 fc	26 fc	12 fc	1.6	2.3
HUDDLE 220	25 fc	33 fc	17 fc	1.5	1.9
JC 124	17 fc	21 fc	13 fc	1.4	1.6
LAN/IT ROOM 223	32 fc	45 fc	19 fc	1.7	2.3
LOBBY / GATHERING 100	12 fc	21 fc	6 fc	1.9	3.3
MEN'S TOILET 157	14 fc	22 fc	7 fc	2.0	3.0
MEN'S TOILET 206	14 fc	21 fc	7 fc	1.9	2.8
MOTHER'S ROOM 155	21 fc	35 fc	11 fc	1.9	3.1
OFFICE 140	39 fc	53 fc	23 fc	1.7	2.3
OFFICE 159	39 fc	53 fc	23 fc	1.7	2.3
OFFICE 160	39 fc	53 fc	23 fc	1.7	2.3
OFFICE 161	39 fc	53 fc	24 fc	1.6	2.2
OFFICE 162	39 fc	53 fc	24 fc	1.6	2.2
OFFICE 163	39 fc	52 fc	24 fc	1.6	2.2
OFFICE 164	38 fc	53 fc	19 fc	1.9	2.7
OFFICE 165	39 fc	54 fc	21 fc	1.9	2.6
OFFICE 166	39 fc	54 fc	26 fc	1.5	2.1
OFFICE 167	38 fc	53 fc	22 fc	1.8	2.4
OFFICE 168	37 fc	54 fc	18 fc	2.1	3.0
OFFICE 169	37 fc	53 fc	18 fc	2.0	2.9

LIGHTING CALCULATION TABULAR SUMMARY

Calculation Points Name	Average	Maximum	Minimum	Avg/Min	Max/Min
OFFICE 172	39 fc	53 fc	21 fc	1.8	2.5
OFFICE 173	40 fc	54 fc	23 fc	1.7	2.3
OFFICE 224	39 fc	53 fc	24 fc	1.6	2.2
OFFICE 225	39 fc	53 fc	22 fc	1.8	2.4
OFFICE 226	39 fc	52 fc	23 fc	1.7	2.2
OFFICE 227	39 fc	53 fc	22 fc	1.8	2.4
OFFICE 232	38 fc	52 fc	21 fc	1.8	2.5
OFFICE 233	39 fc	52 fc	22 fc	1.7	2.3
OFFICE 234	38 fc	53 fc	21 fc	1.9	2.6
OFFICE 235	38 fc	53 fc	22 fc	1.7	2.3
OFFICE 236	39 fc	53 fc	21 fc	1.9	2.5
OFFICE 237	38 fc	49 fc	23 fc	1.6	2.1
OFFICE 240	39 fc	53 fc	23 fc	1.7	2.3
OFFICE 241	38 fc	53 fc	23 fc	1.7	2.3
OFFICE 242	38 fc	52 fc	20 fc	1.9	2.6
OFFICE 243	37 fc	52 fc	22 fc	1.7	2.3
OFFICE 244	38 fc	52 fc	23 fc	1.6	2.2
OFFICE 245	39 fc	52 fc	20 fc	1.9	2.6
OFFICE 246	40 fc	53 fc	27 fc	1.5	2.0
OFFICE 247	38 fc	52 fc	19 fc	2.0	2.7
OFFICE 248	36 fc	53 fc	19 fc	1.9	2.8
OPEN OFFICE 110	41 fc	63 fc	20 fc	2.0	3.1
OPEN OFFICE 111	39 fc	65 fc	16 fc	2.4	4.1
OPEN OFFICE 120	42 fc	54 fc	15 fc	2.8	3.6
OPEN OFFICE 121	40 fc	50 fc	15 fc	2.6	3.3
OPEN OFFICE 210	43 fc	54 fc	19 fc	2.2	2.8
OPEN OFFICE 211	38 fc	62 fc	14 fc	2.7	4.4
OPEN OFFICE 230	40 fc	51 fc	16 fc	2.5	3.1
PRINT/COPY 123	33 fc	43 fc	23 fc	1.4	1.8
PRINT/COPY 174	23 fc	31 fc	15 fc	1.6	2.1
PRINT/COPY 212	27 fc	32 fc	15 fc	1.9	2.2
PRINT/COPY 228	34 fc	42 fc	27 fc	1.3	1.6
RECEIVING/MAIL ROOM 133	37 fc	47 fc	19 fc	1.9	2.4
RECEPTION 101	26 fc	33 fc	17 fc	1.5	1.9
SEATING AREA 112	39 fc	62 fc	15 fc	2.7	4.3
SPRINKLER ROOM 131	27 fc	46 fc	9 fc	3.1	5.3
STORAGE 106	17 fc	20 fc	10 fc	1.7	2.1
STORAGE 134	13 fc	17 fc	7 fc	1.7	2.3
STORAGE 202	16 fc	22 fc	9 fc	1.9	2.5
STORAGE 231	22 fc	27 fc	18 fc	1.2	1.5
TELECOM 143	50 fc	73 fc	30 fc	1.7	2.4
TELECOM 171	55 fc	73 fc	38 fc	1.5	1.9
TELECOM 251	54 fc	72 fc	37 fc	1.5	2.0
VENDING 201	18 fc	25 fc	8 fc	2.2	3.1
VESTIBULE 102	26 fc	33 fc	22 fc	1.2	1.5
VESTIBULE 130	24 fc	31 fc	14 fc	1.8	2.3
WAITING AREA 103	26 fc	33 fc	18 fc	1.4	1.8
WOMEN'S TOILET 156	16 fc	23 fc	8 fc	2.0	2.8
WOMEN'S TOILET 205	15 fc	21 fc	10 fc	1.4	2.1
WORK ROOM 122	41 fc	52 fc	24 fc	1.7	2.2

LIGHTING POWER DENSITY CALCULATIONS TABULAR SUMMARY

Calculation Points Name	Space: Actual Lighting Load	Space: Actual Lighting Load/Area
BREAK OUT 125	18 W	0.25 W/ft²
BREAK RM 158	54 W	0.43 W/ft²
BREAK RM 207	54 W	0.42 W/ft²
BREAKOUT 228	18 W	0.24 W/ft²
BREAKOUT 252	18 W	0.24 W/ft²
BRIDGE 240C	216 W	0.52 W/ft²
CONFERENCE ROOM 144	120 W	0.49 W/ft²
CONFERENCE ROOM 151	260 W	0.37 W/ft²
CONFERENCE ROOM 152	260 W	0.37 W/ft²
CONFERENCE ROOM 153	120 W	0.57 W/ft²
CONFERENCE ROOM 154	120 W	0.57 W/ft²
CONFERENCE ROOM 200	120 W	0.60 W/ft²
CONFERENCE ROOM 203	228 W	0.65 W/ft²
CORRIDOR 100A	162 W	0.69 W/ft²
CORRIDOR 100B	18 W	0.46 W/ft²
CORRIDOR 120A	191 W	0.48 W/ft²
CORRIDOR 120B	150 W	0.49 W/ft²
CORRIDOR 140A	234 W	0.87 W/ft²
CORRIDOR 160A	252 W	0.88 W/ft²
CORRIDOR 170A	237 W	0.87 W/ft²
CORRIDOR 200A	220 W	0.66 W/ft²
CORRIDOR 210A	176 W	0.51 W/ft²
CORRIDOR 220A	201 W	1.04 W/ft²
CORRIDOR 230A	442 W	0.49 W/ft²
CORRIDOR 240A	255 W	0.87 W/ft²
CORRIDOR 250	147 W	0.95 W/ft²
CORRIDOR RESTROOM 100C	58 W	1.03 W/ft²
ELEC 142	60 W	0.47 W/ft²
ELEC 170	60 W	0.51 W/ft²
ELEC 221	60 W	0.54 W/ft²
ELEC 250	60 W	0.54 W/ft²
ELEC/TEL 132	90 W	0.45 W/ft²
FOCUS 145	18 W	0.25 W/ft²
FURNITURE STORAGE 105	40 W	0.29 W/ft²
FURNITURE STORAGE 141	40 W	0.24 W/ft²
HUDDLE 220	54 W	0.49 W/ft²
JC 124	30 W	0.38 W/ft²
LAN/IT ROOM 223	180 W	0.41 W/ft²
LOBBY / GATHERING 100	270 W	0.49 W/ft²
MEN'S TOILET 157	114 W	0.45 W/ft²
MEN'S TOILET 206	114 W	0.45 W/ft²
MOTHER'S ROOM 155	108 W	0.75 W/ft²
OFFICE 140	96 W	0.67 W/ft²
OFFICE 159	96 W	0.63 W/ft²
OFFICE 160	96 W	0.64 W/ft²
OFFICE 161	96 W	0.63 W/ft²
OFFICE 162	96 W	0.63 W/ft²
OFFICE 163	96 W	0.63 W/ft²
OFFICE 164	96 W	0.64 W/ft²
OFFICE 165	96 W	0.64 W/ft²
OFFICE 166	96 W	0.64 W/ft²
OFFICE 167	96 W	0.65 W/ft²
OFFICE 168	96 W	0.60 W/ft²
OFFICE 169	96 W	0.61 W/ft²
OFFICE 172	96 W	0.62 W/ft²
OFFICE 173	96 W	0.67 W/ft²
OFFICE 224	96 W	0.63 W/ft²
OFFICE 225	96 W	0.63 W/ft²
OFFICE 226	96 W	0.64 W/ft²
OFFICE 227	96 W	0.63 W/ft²
OFFICE 232	96 W	0.64 W/ft²
OFFICE 233	96 W	0.65 W/ft²
OFFICE 234	96 W	0.64 W/ft²
OFFICE 235	96 W	0.64 W/ft²
OFFICE 236	96 W	0.64 W/ft²
OFFICE 237	96 W	0.65 W/ft²
OFFICE 240	96 W	0.64 W/ft²
OFFICE 241	96 W	0.64 W/ft²
OFFICE 242	96 W	0.64 W/ft²
OFFICE 243	96 W	0.64 W/ft²
OFFICE 244	96 W	0.64 W/ft²
OFFICE 245	96 W	0.64 W/ft²
OFFICE 246	96 W	0.68 W/ft²
OFFICE 247	96 W	0.64 W/ft²
OFFICE 248	96 W	0.61 W/ft²
OPEN OFFICE 110	1303 W	0.82 W/ft²
OPEN OFFICE 111	723 W	0.59 W/ft²
OPEN OFFICE 120	1589 W	0.65 W/ft²
OPEN OFFICE 121	1528 W	0.64 W/ft²
OPEN OFFICE 210	1603 W	0.68 W/ft²
OPEN OFFICE 211	1673 W	0.63 W/ft²
OPEN OFFICE 230	3703 W	0.59 W/ft²
RECEIVING/MAIL ROOM 133	80 W	0.37 W/ft²
RECEPTION 101	72 W	0.56 W/ft²
SEATING AREA 112	514 W	0.84 W/ft²
SPRINKLER ROOM 131	90 W	0.55 W/ft²
STORAGE 106	36 W	0.72 W/ft²
STORAGE 134	20 W	0.18 W/ft²
STORAGE 202	212 W	1.23 W/ft²
STORAGE 231	30 W	0.58 W/ft²
TELECOM 143	90 W	0.71 W/ft²
TELECOM 171	90 W	0.81 W/ft²
TELECOM 251	90 W	0.83 W/ft²
VENDING 201	68 W	0.41 W/ft²
VESTIBULE 102	70 W	0.86 W/ft²
VESTIBULE 130	105 W	0.56 W/ft²
WAITING AREA 103	72 W	0.55 W/ft²
WOMEN'S TOILET 156	129 W	0.54 W/ft²
WOMEN'S TOILET 205	129 W	0.54 W/ft²
WORK ROOM 122	80 W	0.42 W/ft²

LIGHTING EGRESS CALCULATION TABULAR SUMMARY

Calculation Points Name	Average	Maximum	Minimum	Avg/Min	Max/Min
BRIDGE 240C	6 fc	9 fc	1 fc	5.7	9.3
CORRIDOR 100A	9 fc	13 fc	4 fc	2.1	3.0
CORRIDOR 100B	6 fc	8 fc	4 fc	1.4	1.8
CORRIDOR 140A	8 fc	11 fc	2 fc	4.5	6.3
CORRIDOR 160A	10 fc	15 fc	7 fc	1.4	2.1
CORRIDOR 170A	10 fc	16 fc	2 fc	4.8	7.4
CORRIDOR 200A	8 fc	12 fc	4 fc	2.1	3.0
CORRIDOR 220A	10 fc	16 fc	7 fc	1.5	2.4
CORRIDOR 250	10 fc	12 fc	7 fc	1.4	1.8
CORRIDOR RESTROOM 100C	9 fc	14 fc	6 fc	1.4	2.2
LAN/IT ROOM 223	8 fc	15 fc	1 fc	8.0	14.1
MEN'S TOILET 157	5 fc	7 fc	1 fc	4.6	7.1
OPEN OFFICE 110	5 fc	7 fc	1 fc	4.4	6.3
OPEN OFFICE 111	7 fc	14 fc	1 fc	5.5	11.7
OPEN OFFICE 121	8 fc	21 fc	1 fc	13.8	38.5
OPEN OFFICE 210	7 fc	22 fc	2 fc	4.2	13.2
OPEN OFFICE 211	8 fc	15 fc	2 fc	3.4	6.6
OPEN OFFICE 230	7 fc	23 fc	1 fc	4.7	16.4
SPRINKLER ROOM 131	7 fc	11 fc	3 fc	2.4	3.6
TELECOM 143	11 fc	15 fc	8 fc	1.5	2.0
TELECOM 171	11 fc	16 fc	6 fc	1.7	2.5
TELECOM 251	12 fc	16 fc	9 fc	1.3	1.8
VESTIBULE 102	9 fc	13 fc	4 fc	2.1	2.8
VESTIBULE 130	8 fc	11 fc	4 fc	1.9	2.6
WOMEN'S TOILET 156	5 fc	7 fc	1 fc	6.9	10.5

JACOBS

LIGHTING CALCULATIONS

DESIGNED BY: D. RUSTAMOVA
DRAWN BY: R.KAUR
CHECKED BY: M. BECKER
SUBMITTED BY: JACOBS ENGINEERING
ISSUE DATE: 03/09/2022

FEDERAL AVIATION ADMINISTRATION
WARRENTON ADMINISTRATIVE BUILDING
LIGHTING CALCULATIONS TABULAR SUMMARY

SHEET ID
E909

Manufacturer Product Data Sheets

1 Power Distribution Equipment

2 Common Components

3 Grounding and Bonding Components

4 Lightning Protection System Components

5 Lighting Fixture Product Data Sheets

Type HCR-U—1200 A Main Circuit Beaker

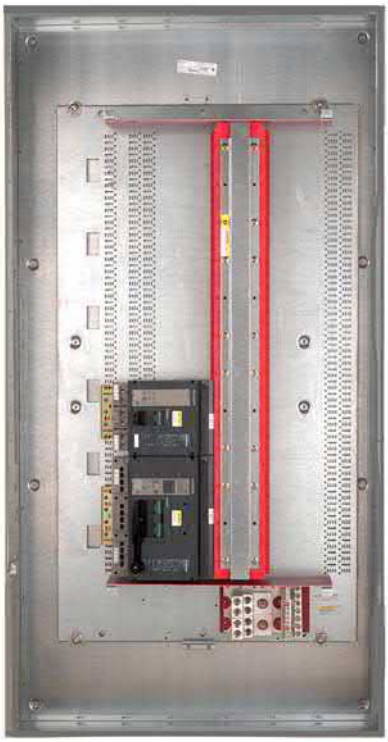

Type HCR-U—1200 A Main Circuit Beaker

Product Description

Square D™-brand I-Line™ circuit breaker power distribution panelboards are for use on AC or DC systems. The panels, labeled cULus (compliance to UL and CSA standards certified by UL) are also Underwriters Laboratories® (UL®) Listed under File E33139. The following are suitable for use as service entrance equipment:

- All main circuit breaker panelboards.
- All main lugs panelboards with branch-mounted, back-fed main circuit breaker. (For Canadian MLO service entrance, use HCP-SU and HCR-U only).
- All main lugs panelboards with six disconnects or less.
- A solid neutral that is insulated, but may be bonded to the box with a grounding strap.
- Service entrance panelboards meeting the requirements of CSA are available in Canada factory-assembled only.

I-Line circuit breaker panelboards are available as 400–1200 A main lugs only and 100–1200 A main circuit breakers. I-Line panelboards are designed to accept the following circuit breakers: FA, FH, BD, BG, BJ, BK, HD, HG, HJ, HL, HR, QB, QD, QG, QJ, JD, JG, JJ, JL, JR, LA, LD, LG, LJ, LH, LL, LR, MG, MJ, PG, PJ, PK, PL, RG, RJ, RK, and RL.

Standards

I-Line circuit breaker panelboards are designed, manufactured, and tested to comply with the following standards:

Standard	Description
UL 50	Standard for enclosures for electrical equipment
UL 67	Standard for panelboards
CSA C22.2, Nos. 29 and 94—1989	Standard for panelboards and enclosed panelboards
NFPA 70	National Electrical Code (NEC)
NEMA PB 1	Standard for panelboards
W–P 115C Type 1 Class 1	Specification for circuit breaker panelboards
2000 IBC	US standard for seismic requirements
1995 NBCC	Canadian standard for seismic requirements

Service

I-Line circuit breaker panelboards can be used on the following system voltages:

- 120/240 VAC; 1-phase, 3-wire
- 240 VAC; 1-phase, 2-wire
- 240 VAC; 3-phase, 3-wire
- 240 VAC Ground, B-phase; 3-phase, 3-wire
- 208Y/120 VAC; 3-phase, 4-wire
- 480Y/277 VAC; 3-phase, 4-wire
- 480 VAC; 3-phase, 3-wire
- 600Y/347 VAC; 3-phase, 4-wire
- 600 VAC; 3-phase, 3-wire
- 125/250 VDC; 3-wire
- 250 VDC; 2-wire

© 1998–2016 Schneider Electric
All Rights Reserved

Type HCP—600 A Main Circuit Breaker

Panelboard Types

Panelboard Type	Maximum Mains Ampacity		Maximum Branch Circuit Breaker Frame Size [a]		Enclosure Dimensions [b]	
	Main Lugs	Main Circuit Breakers	Left	Right	Width IN (mm)	Depth IN (mm)
HCM	800 A	800 A	JD	JD	32 (813)	8.25 (210)/ 9.50 (241)
HCP-SU	800 A	800 A [c]	MG, PG	None	26 (600)	9.50 (241)
HCP	1200 A	800 A [c]	MG, PG	JD	42 (1067)	9.50 (241)
HCR-U	1200 A	1200 A [c]	RG	JD	44 (1118)	9.50 (241)

a For a complete listing of applicable circuit breaker types, refer to the dimensions section.

b Refer to the Dimensions section for standard panelboard heights.

c Available as a main circuit breaker panelboard when provided with a branch mounted back-fed main circuit breaker.

Type HCP-SU
800 A Main Circuit Beaker

Type HCM—400 A Main Lugs

© 1998–2016 Schneider Electric
All Rights Reserved

Dimensions

Type HCM—800 A Maximum Main Lugs

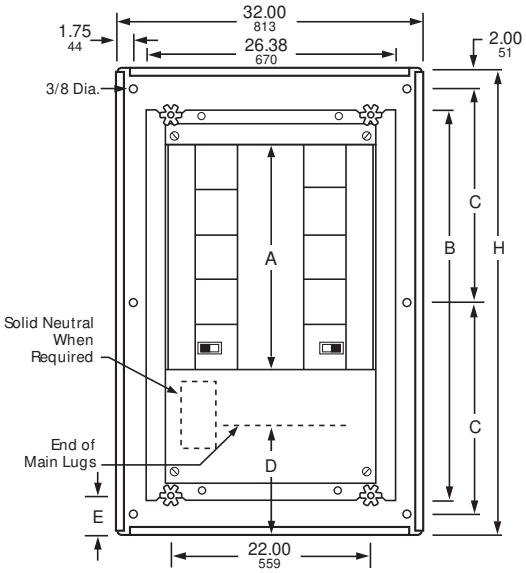

Typical Box with Interior

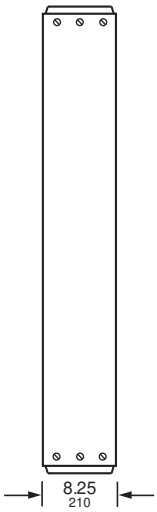

Typical Box Side View

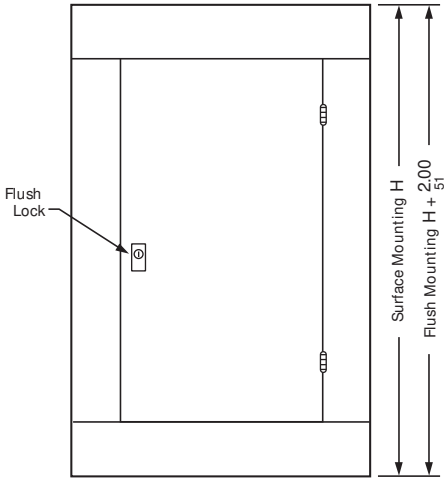

Typical 4-Piece Trim
with Optional Door

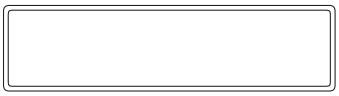

Typical Endwall

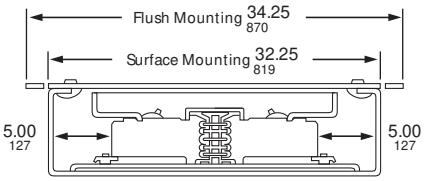

Typical Mounting of BD, BG, BJ, BK, FA, FH, HD, HG, HJ, HL, HR, JD, JG, JJ, JL, JR, QB, QD, QG, QJ Circuit Breakers

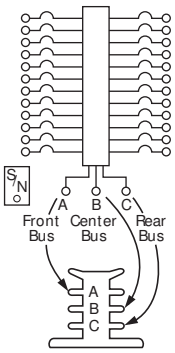

Typical Wiring Diagram

Branch connection phasing is determined by circuit breaker selection.

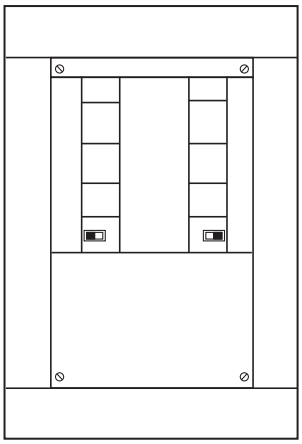

Typical 4-Piece Trim
without Optional Door

Dual Dimensions: INCHES
Millimeters

Main Lugs Ampere Rating	Catalog Number				H		A		B		C		D		E	
	Interior	Box	4-Piece Trim without Door ‡	4-Piece Trim with Door ‡	in.	mm	in.	mm	in.	mm	in.	mm	in.	mm	in.	mm
225	HCM14482N b	HC3248B	HCM48T( )	HCM48T( )D	48.00	1219	13.50	343	30.00	762	21.85	555	14.43	367	9.30	236
	HCM23642N	HC3264B	HCM64T( )	HCM64T( )D	64.00	1626	22.50	572	39.00	991	29.85	758	17.93	455	12.80	325
	HCM32732N	HC3273B	HCM73T( )	HCM73T( )D a	73.00	1854	31.50	800	48.00	1219	22.90	582	17.93	455	12.80	325
	HCM50912N	HC3291B	HCM91T( )	HCM91T( )D a	91.00	2311	49.50	1257	66.00	1676	28.90	734	17.93	455	12.80	325
400	HCM14484 b	HC3248B	HCM48T( )	HCM48T( )D	48.00	1219	13.50	343	30.00	762	21.85	555	14.90	378	9.30	236
	HCM23644	HC3264B	HCM64T( )	HCM64T( )D	64.00	1626	22.50	572	39.00	991	29.85	758	18.40	467	12.80	325
	HCM32734 b	HC3273B	HCM73T( )	HCM73T( )D a	73.00	1854	31.50	800	48.00	1219	22.90	582	18.40	467	12.80	325
	HCM50914	HC3291B	HCM91T( )	HCM91T( )D a	91.00	2311	49.50	1257	66.00	1676	28.90	734	18.40	467	12.80	325

Continued on next page

© 1998–2016 Schneider Electric
All Rights Reserved

Dimensions

Main Lugs Ampere Rating	Catalog Number				H		A		B		C		D		E	
	Interior	Box	4-Piece Trim without Door ‡	4-Piece Trim with Door ‡	in.	mm	in.	mm	in.	mm	in.	mm	in.	mm	in.	mm
600	HCM14486 b	HC3248B	HCM48T( )	HCM48T( )D	48.00	1219	13.50	343	30.00	762	21.85	555	16.50	419	9.30	236
	HCM23646	HC3264B	HCM64T( )	HCM64T( )D	64.00	1626	22.50	572	39.00	991	29.85	758	20.00	508	12.80	325
	HCM32736 b	HC3273B	HCM73T( )	HCM73T( )D a	73.00	1854	31.50	800	48.00	1219	22.90	582	20.00	508	12.80	325
	HCM50916	HC3291B	HCM91T( )	HCM91T( )D a	91.00	2311	49.50	1257	66.00	1676	28.90	734	20.00	508	12.80	325
800	HCM14488	HC3248B	HCM48T( )	HCM48T( )D	48.00	1219	13.50	343	30.00	762	21.85	555	15.32	389	9.30	236
	HCM23648	HC3264B	HCM64T( )	HCM64T( )D	64.00	1626	22.50	572	39.00	991	29.85	758	18.82	478	12.80	325
	HCM32738	HC3273B	HCM73T( )	HCM73T( )D a	73.00	1854	31.50	800	48.00	1219	22.90	582	18.82	478	12.80	325
	HCM50918	HC3291B	HCM91T( )	HCM91T( )D a	91.00	2311	49.50	1257	66.00	1676	28.90	734	18.82	478	12.80	325

‡ Replace parentheses with “F” for flush or “S” for surface.

a Two flush locks are supplied.

b Add Cu to suffix for copper bus.

© 1998–2016 Schneider Electric
All Rights Reserved

Type HCM—400 A Maximum Main Circuit Breaker

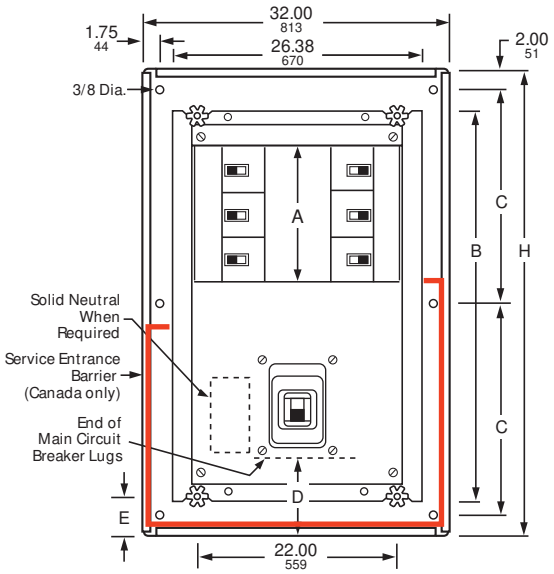

Typical Box with Interior

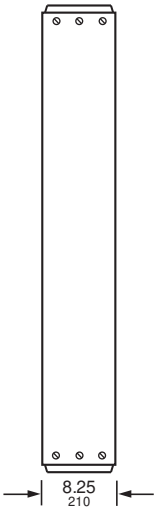

Typical Box Side View

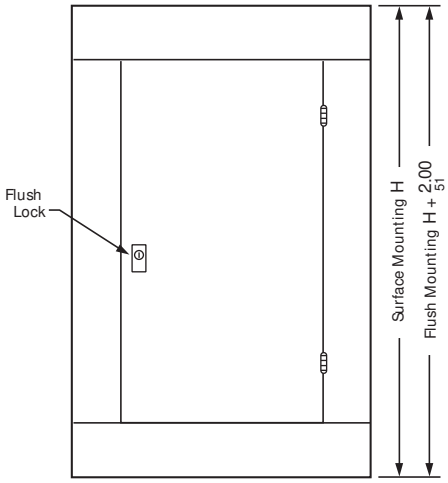

Typical 4-Piece Trim with Optional Door

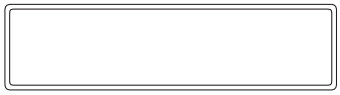

Typical Endwall

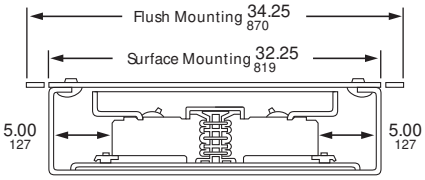

Typical Mounting of BD, BG, BJ, BK, FA, FH, HD, HG, HJ, HL, HR, JD, JG, JJ, JL, JR, QB, QD, QG, QJ Circuit Breakers

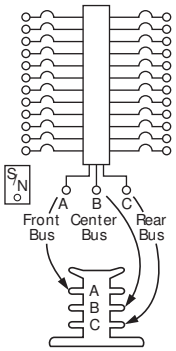

Typical Wiring Diagram

Branch connection phasing is determined by circuit breaker selection.

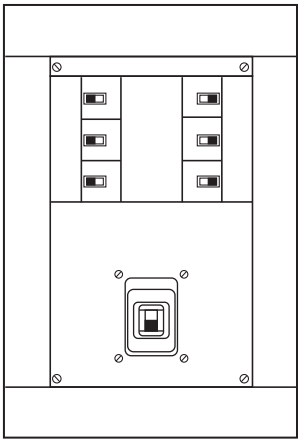

Typical 4-Piece Trim without Optional Door

Dual Dimensions: INCHES
Millimeters

Main Circuit Breaker Ampere Rating	Catalog Number				H		A		B		C		D		E	
	Interior	Box	4-Piece Trim without Door ‡	4-Piece Trim with Door ‡	in.	mm	in.	mm	in.	mm	in.	mm	in.	mm	in.	mm
225	HCM18642MN	HC3264B	HCM64T( )	HCM64T( )D	64.00	1626	18.00	457	39.00	991	29.85	758	15.50	394	12.80	325
225	HCM27732MN b	HC3273B	HCM73T( )	HCM73T( )D a	73.00	1854	27.00	686	48.00	1219	22.90	582	15.50	394	12.80	325
400	HCM14644M	HC3264B	HCM64T( )	HCM64T( )D	64.00	1626	13.50	343	39.00	991	29.85	758	16.96	431	12.80	325
400	HCM23734M	HC3273B	HCM73T( )	HCM73T( )D a	73.00	1854	22.50	572	48.00	1219	22.90	582	16.96	431	12.80	325
400	HCM41914M b	HC3291B	HCM91T( )	HCM91T( )D a	91.00	2311	40.50	1029	66.00	1676	28.90	734	16.96	431	12.80	325

‡ Replace parentheses with “F” for flush or “S” for surface.

a Two flush locks are supplied.

b Add Cu to suffix for copper bus.

© 1998–2016 Schneider Electric
All Rights Reserved

Type HCM—800 A Maximum Main Circuit Breaker

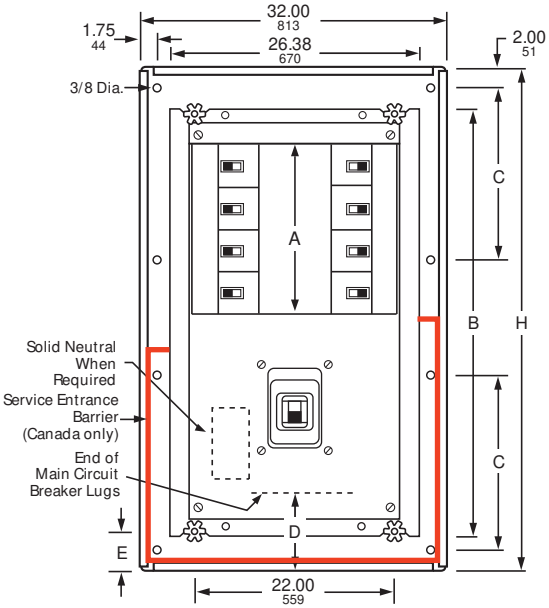

Typical Box with Interior

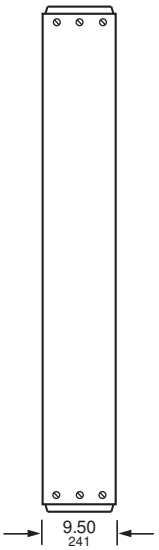

Typical Box Side View

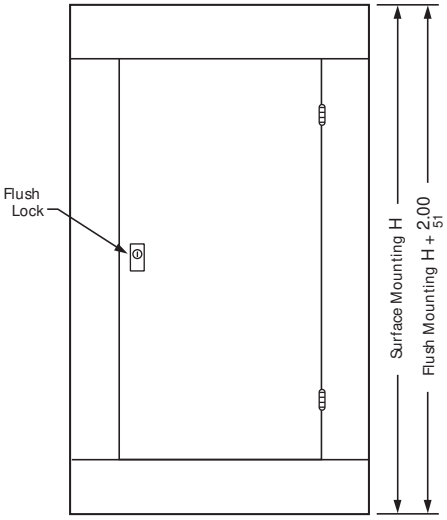

Typical 4-Piece Trim with Optional Door

Typical Endwall

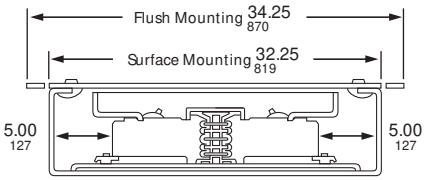

Typical Mounting of BD, BG, BJ, BK, FA, FH, HD, HG, HJ, HL, HR, , JD, JG, JJ, JL, JR, QB, QD, QG, QJ Circuit Breakers

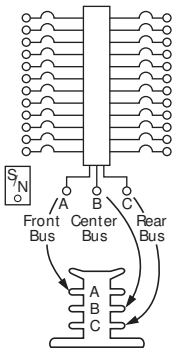

Typical Wiring Diagram

Branch connection phasing is determined by circuit breaker selection.

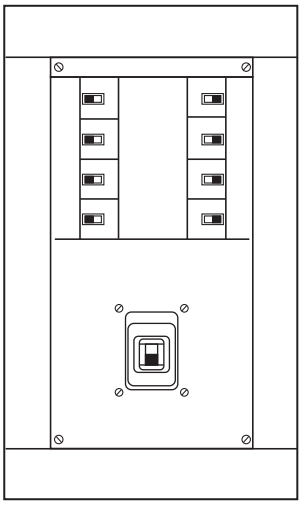

Typical 4-Piece Trim without Optional Door

Dual Dimensions: INCHES
Millimeters

Main Circuit Breaker Ampere Rating	Catalog Number				H		A		B		C		D		E	
	Interior	Box	4-Piece Trim without Door ‡	4-Piece Trim with Door ‡ a	in.	mm	in.	mm	in.	mm	in.	mm	in.	mm	in.	mm
600	HCM18736MP	HC3273DB9	HCM73T( )	HCM73T( )D	73.00	1854	18.00	457	48.00	1219	22.90	582	18.68	474	12.80	325
	HCM36916MP	HC3291DB9	HCM91T( )	HCM91T( )D	91.00	2311	36.00	914	66.00	1676	28.90	734	18.68	474	12.80	325
800	HCM18738MP	HC3273DB9	HCM73T( )	HCM73T( )D	73.00	1854	18.00	457	48.00	1219	22.90	582	18.68	474	12.80	325
	HCM36918MP	HC3291DB9	HCM91T( )	HCM91T( )D	91.00	2311	36.00	914	66.00	1676	28.90	734	18.68	474	12.80	325

‡ Replace parentheses with “F” for flush or “S” for surface.

a Two flush locks are supplied.

© 1998–2016 Schneider Electric
All Rights Reserved

Type HCP—800 A Maximum Main Lugs

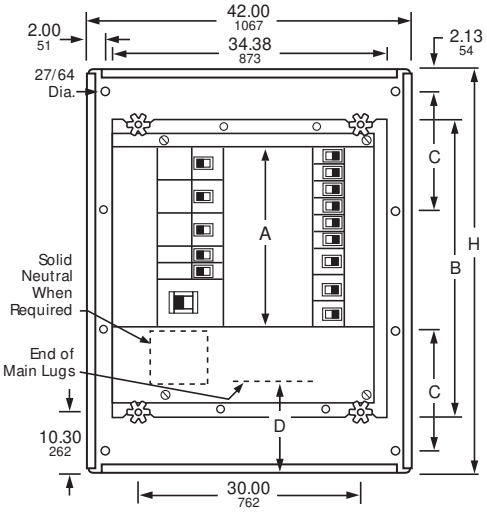

Typical Box with Interior

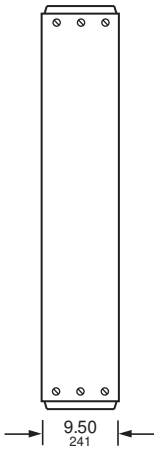

Typical Box Side View

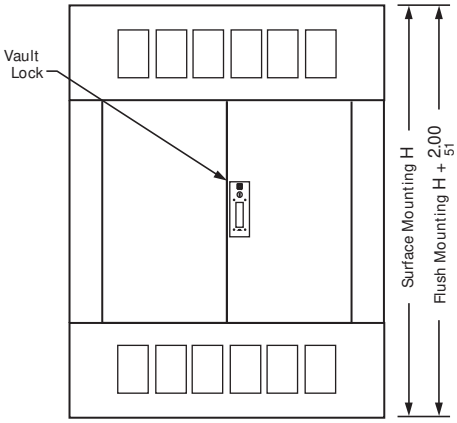

Typical 4-Piece Trim
with Optional Door

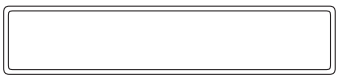

Typical Endwall

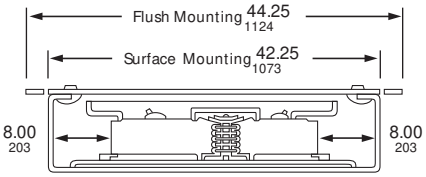

Typical Mounting of BD, BG, BJ, BK, FA, FH,
HD, HG, HJ, HL, JD, JG, JJ, JL, LA, LD, LG, LJ, LL, LR, MG, MJ,
PG, PJ, PK, PL, QB, QD, QG, QJ
Circuit Breakers

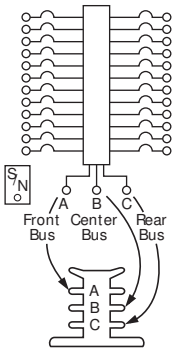

Typical Wiring Diagram

Branch connection phasing is determined by circuit breaker selection.

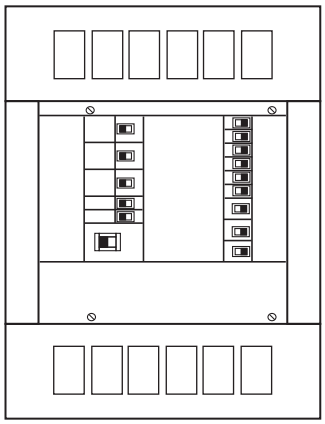

Typical 4-Piece Trim
without Optional Door

Dual Dimensions: INCHES
Millimeters

Main Lugs Ampere Rating	Catalog Number				H		A		B		C		D	
	Interior	Box	4-Piece Trim without Door ‡	4-Piece Trim with Door ‡	in.	mm	in.	mm	in.	mm	in.	mm	in.	mm
400	HCP14504	HC4250DB	HCW50T( )	HCW50T( )D	50.00	1270	13.50	343	30.00	762	22.85	580	17.50	445
	HCP23594	HC4259DB	HCW59T( )	HCW59T( )D	59.00	1499	22.50	572	39.00	991	27.35	695	17.50	445
	HCP32684	HC4268DB	HCW68T( )	HCW68T( )D	68.00	1727	31.50	800	48.00	1219	31.85	809	17.50	445
	HCP50864	HC4286DB	HCW86T( )	HCW86T( )D	86.00	2184	49.50	1257	66.00	1676	27.23	692	17.50	445
600	HCP14506	HC4250DB	HCW50T( )	HCW50T( )D	50.00	1270	13.50	343	30.00	762	22.85	580	17.50	445
	HCP23596	HC4259DB	HCW59T( )	HCW59T( )D	59.00	1499	22.50	572	39.00	991	27.35	695	17.50	445
	HCP32686	HC4268DB	HCW68T( )	HCW68T( )D	68.00	1727	31.50	800	48.00	1219	31.85	809	17.50	445
	HCP50866	HC4286DB	HCW86T( )	HCW86T( )D	86.00	2184	49.50	1257	66.00	1676	27.23	692	17.50	445
800	HCP14508	HC4250DB	HCW50T( )	HCW50T( )D	50.00	1270	13.50	343	30.00	762	22.85	580	16.32	415
	HCP23598	HC4259DB	HCW59T( )	HCW59T( )D	59.00	1499	22.50	572	39.00	991	27.35	695	16.32	415
	HCP32688	HC4268DB	HCW68T( )	HCW68T( )D	68.00	1727	31.50	800	48.00	1219	31.85	809	16.32	415
	HCP50868	HC4286DB	HCW86T( )	HCW86T( )D	86.00	2184	49.50	1257	66.00	1676	27.23	692	16.32	415

‡ Replace parentheses with “F” for flush or “S” for surface.

© 1998–2016 Schneider Electric
All Rights Reserved

Type HCP—1200 A Maximum Main Lugs

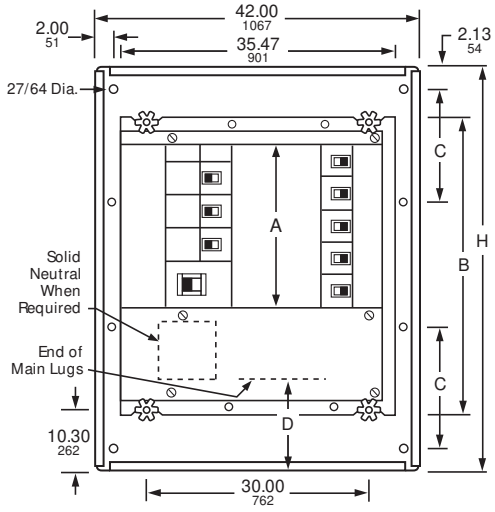

Typical Box with Interior

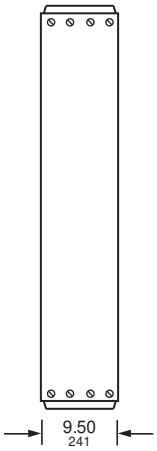

Typical Box Side View

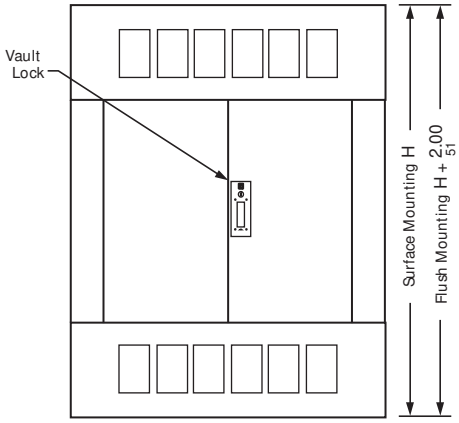

Typical 4-Piece Trim with Optional Door

Typical Endwall

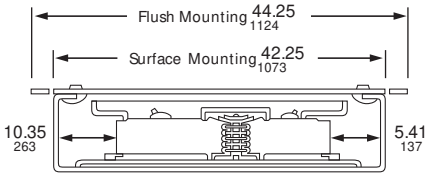

Typical Mounting of BD, BG, BJ, BK, FA, FH, HD, HG, HJ, HL, JD, JG, JJ, JL, LA, LD, LG, LJ, LL, LR, MG, MJ, PG, PJ, PK, PL, QB, QD, QG, QJ Circuit Breakers

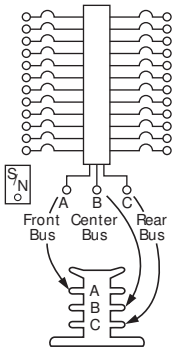

Typical Wiring Diagram

Branch connection phasing is determined by circuit breaker selection.

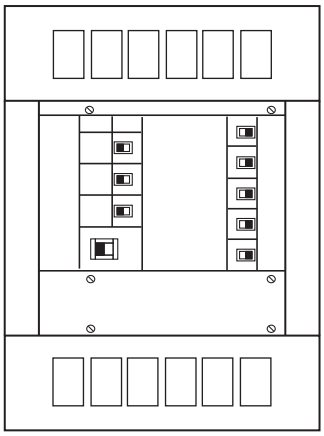

Typical 4-Piece Trim without Optional Door

Dual Dimensions: INCHES
Millimeters

Main Lugs Ampere Rating	Catalog Number				H		A		B		C		D	
	Interior	Box	4-Piece Trim without Door ‡	4-Piece Trim with Door ‡	in.	mm	in.	mm	in.	mm	in.	mm	in.	mm
1200	HCP145012N	HC4250DB	HCW50T( )	HCW50T( )D	50.00	1270	13.50	343	30.00	762	22.85	580	16.32	415
	HCP235912N	HC4259DB	HCW59T( )	HCW59T( )D	59.00	1499	22.50	572	39.00	991	27.23	692	16.32	415
	HCP326812N	HC4268DB	HCW68T( )	HCW68T( )D	68.00	1727	31.50	800	48.00	1219	31.85	809	16.32	415
	HCP508612N	HC4286DB	HCW86T( )	HCW86T( )D	86.00	2184	49.50	1257	66.00	1676	27.23	692	16.32	415

‡ Replace parentheses with “F” for flush or “S” for surface.

© 1998–2016 Schneider Electric
All Rights Reserved

Type HCP—800 A Maximum Main Circuit Breaker

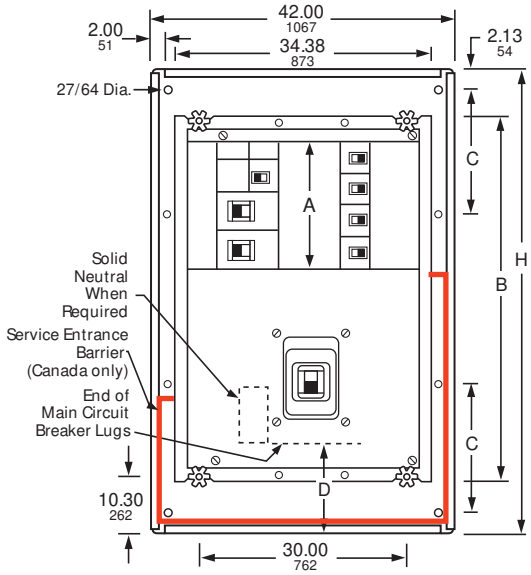

Typical Box with Interior

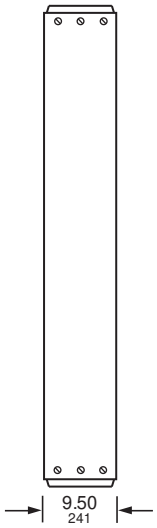

Typical Box Side View

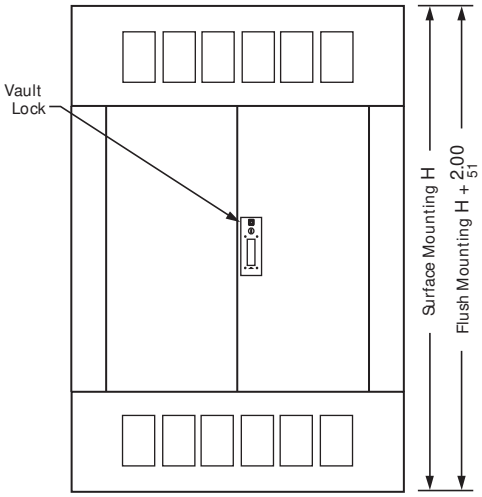

Typical 4-Piece Trim
with Optional Door

Typical Endwall

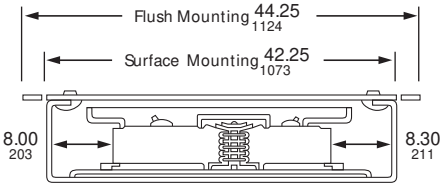

Typical Mounting of BD, BG, BJ, BK, FA, FH, HD, HG, HJ, HL, JD, JG, JJ, JL, LA, LD, LG, LJ, LL, LR, MG, MJ, PG, PJ, PK, PL, QB, QD, QG, QJ
Circuit Breakers

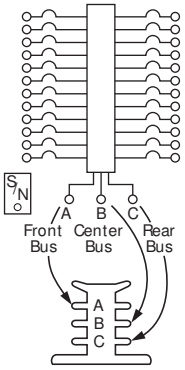

Typical Wiring Diagram

Branch connection phasing is determined by circuit breaker selection.

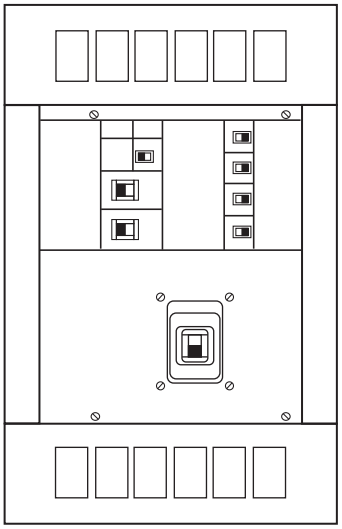

Typical 4-Piece Trim
without Optional Door

Dual Dimensions: INCHES
Millimeters

Main Circuit Breaker Ampere Rating	Catalog Number				H		A		B		C		D	
	Interior	Box	4-Piece Trim without Door ‡	4-Piece Trim with Door ‡	in.	mm	in.	mm	in.	mm	in.	mm	in.	mm
600	HCP18686M	HC4268DB	HCW68T( )	HCW68T( )D	68.00	1727	18.00	457	48.00	1219	31.85	809	18.68	474
	HCP36866M	HC4286DB	HCW86T( )	HCW86T( )D	86.00	2184	36.00	914	66.00	1676	27.23	692	18.68	474
800	HCP18688M	HC4268DB	HCW68T( )	HCW68T( )D	68.00	1727	18.00	457	48.00	1219	31.85	809	18.68	474
	HCP36868M	HC4286DB	HCW86T( )	HCW86T( )D	86.00	2184	36.00	914	66.00	1676	27.23	692	18.68	474

‡Replace parentheses with “F” for flush or “S” for surface.

© 1998–2016 Schneider Electric
All Rights Reserved

Type HCP-SU—800 A Maximum Main Circuit Breaker

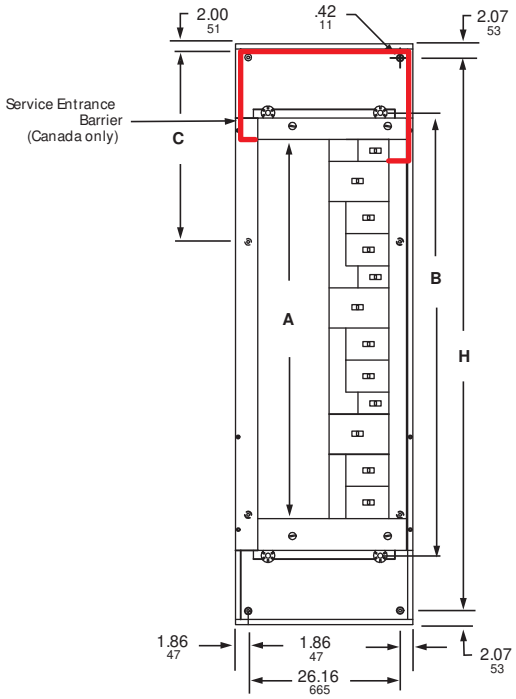

Typical Box with Interior

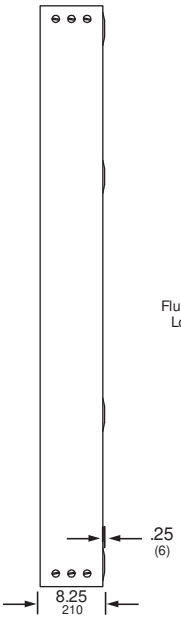

Typical Box Side View

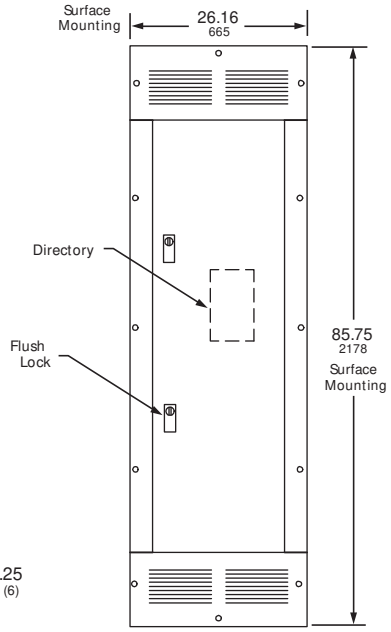

Typical 2-Piece Trim
with Optional Door

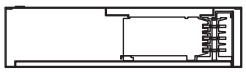

Typical Mounting of BD, BG, BJ, BK, FA, FH, HD, HG, HJ, HL, JD, JG, JJ, JL, LA, LD, LG, LJ, LL, LR, MG, MJ, PG, PJ, PK, PL, QB, QD, QG, QJ
Circuit Breakers

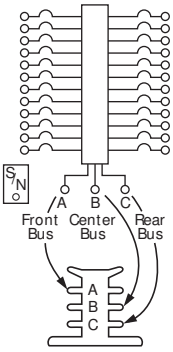

Branch connection phasing is
determined by circuit breaker selection.

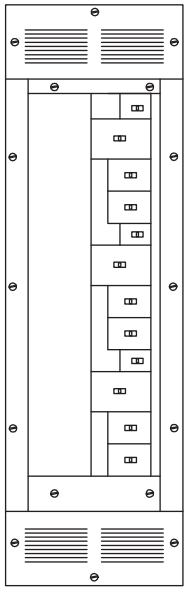

Typical 2-Piece Trim
without Optional Door

Dual Dimensions: INCHES
Millimeters

Main Circuit Breaker Ampere Rating	Catalog Number				H		A		B		C	
	Interior	Box	2-Piece Trim without Door ‡ a	2-Piece Trim with Door ‡ a	in.	mm	in.	mm	in.	mm	in.	mm
800	HCP54868SU	HC2686DB	HC2686T( )	HC2686T( )D	86.00	2184	54.00	1372	65.40	1661	27.23	692

‡ Replace parentheses with “F” for flush or “S” for surface.

a Flush trims are 4-piece.

© 1998–2016 Schneider Electric
All Rights Reserved

Type HCR-U—1200 A Main Lugs or Main Circuit Breaker

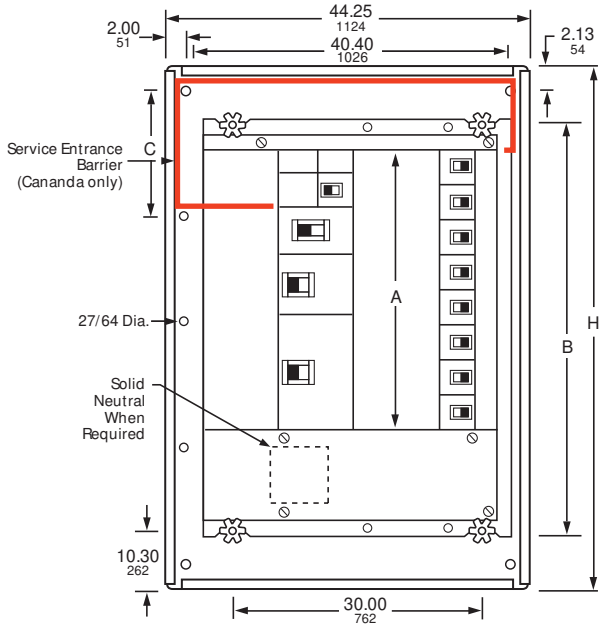

Typical Box with Interior

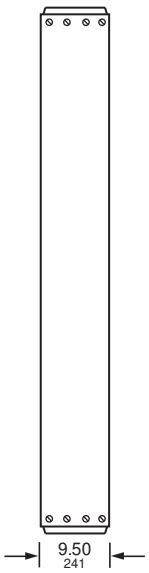

Typical Box Side View

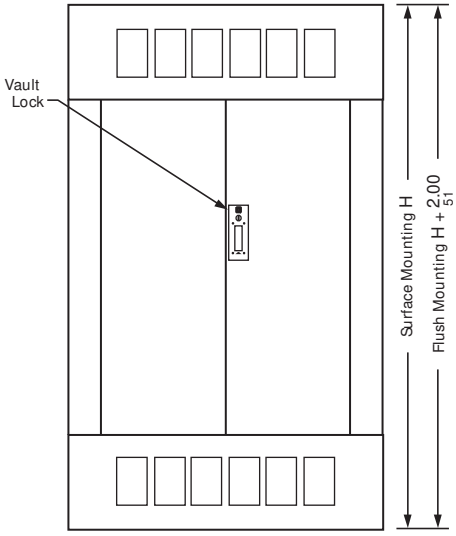

Typical 4-Piece Trim with Optional Door

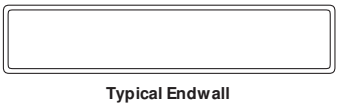

Typical Endwall

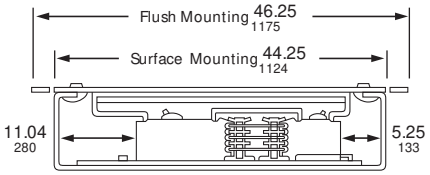

Typical Mounting of BD, BG, BJ, BK, FA, FH, HD, HG, HJ, HL, JD, JG, JJ, JL, LA, LD, LG, LJ, LL, LR, MG, MJ, PG, PJ, PK, PL, QB, QD, QG, QJ, RG, RJ, RK, RL Circuit Breakers

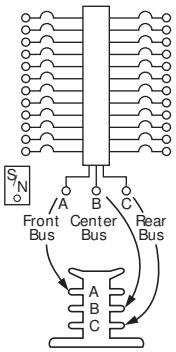

Typical Wiring Diagram

Branch connection phasing is determined by circuit breaker selection.

Back-fed PG, PJ, PL, RG RJ, and RL Main Circuit Breaker or Main Lugs Kit S33930 (see *NOTE*:)

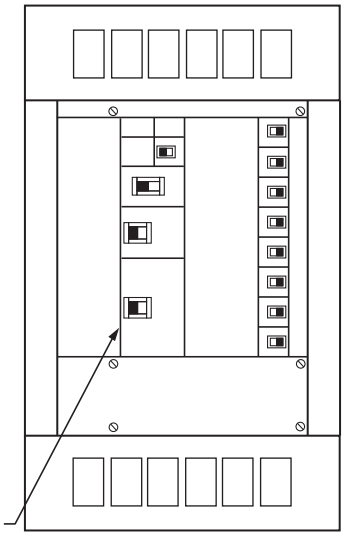

Typical 4-Piece Trim without Optional Door

Dual Dimensions: INCHES
Millimeters

Main Lugs or Main Circuit Breaker Ampere Rating	Catalog Number				H		A		B		C	
	Interior	Box	4-Piece Trim without Door ‡	4-Piece Trim with Door ‡	in.	mm	in.	mm	in.	mm	in.	mm
1200	HCR548612U	HC4486DB	HCR86T( )	HCR86T( )D	86.00	2184	54.00	1372	65.10	1654	18.00	457

‡ Replace parentheses with “F” for flush or “S” for surface.

NOTE: The back-fed RG, RJ, and RL Main Circuit Breaker or Main Lugs Kit takes up 15 in. (381 mm) of mounting space, leaving 93 in. (2362 mm) of branch circuit breaker mounting space. The back-fed PG, PJ, PL Main Circuit Breaker takes up 9 in. (229 mm) of mounting spaces, leaving 99 in. (2515 mm) of branch circuit breaker mounting space.

© 1998–2016 Schneider Electric
All Rights Reserved

THIS PAGE LEFT INTENTIONALLY BLANK

Enclosures

Interior Mounts to Box Studs

MH Box

Front (Type 1) Enclosure
for 400–600 A Interiors

Mono-Flat Front
(Type 1 Enclosure)
for 100–250 A Interiors

Indoor Enclosures

Flush Lock (standard)
(Catalog No. PK4FL)

Key NSR-251
(Catalog No. LP9618)

Sliding Vault Lock (optional)
(Catalog No. PK5FL)

Concealed Hinge
Used on 100–600 A Fronts

Indoor Enclosure Accessories

Table 21: Enclosure Types

Type	Environment	Protects Against
Type 1	Indoor	Contact with the enclosed equipment, falling dirt
Type 2	Indoor	Type 1, plus • Dripping and light splashing of non-corrosive liquids
Type 3R	Outdoor	Type 2, plus • Rain, snow, and sleet
Type 4	Indoor/outdoor	Type 3R, plus • Circulating dust, lint, fibers and flyings • Settling airborne dust, lint, fibers and flyings • Windblown dust • Hosedown and splashing water
Type 4X	Indoor/outdoor	Type 4, plus • Corrosive agents
Type 5	Indoor	Type 2, plus • Settling airborne dust, lint, fibers, and flyings
Type 12	Indoor	Type 2, plus • Circulating dust, lint, fibers, and flyings • Settling airborne dust, lint, fibers, and flyings • Oil and coolant seepage

Indoor Enclosures (Types 1 and 2)

Boxes (MH):

- Galvanized steel with removable endwalls. One is provided with knockouts and the other is blank.
- Standard box sizes:
  — 20 in. (508 mm) wide x 5.75 in. (146 mm) deep, 600 A main lug interior max. or 400 A main circuit breaker max
  — 20 in. (508 mm) wide x 8.75 in. (223 mm) deep, 600 A main circuit breaker interior, factory-assembled only
- Box and interior mounting instructions are found in the information manual shipped with the interior.
- Interiors mount directly to studs in the MH box. Interior mounting brackets are not required.
- Type 2 enclosure includes a driphood.
  — Surface-mounted trim only.

  NOTE: Also available with knockouts / blank endwalls both ends.

Trims:

- Finished with gray baked enamel electrodeposited over cleaned phosphatized steel (ANSI 49).
- Flush or surface mounted (Type 2 surface only).
- Door has flush lock. Uses NSR-251 key.
- Directory card located on the inside of the door.
- Mono-Flat® trims on 100–225 A interiors mount to the interior trim with trim screws. Both trim screws and door hinges are concealed. Trims are not removable with the door closed and locked.
- Trims for 400–600 A interiors are vented and mount to the enclosure with trim screws. Door hinges are concealed.
- Optional hinged trims are available. These meet door-in-door specs.

© 2008 Schneider Electric
All Rights Reserved

Interiors

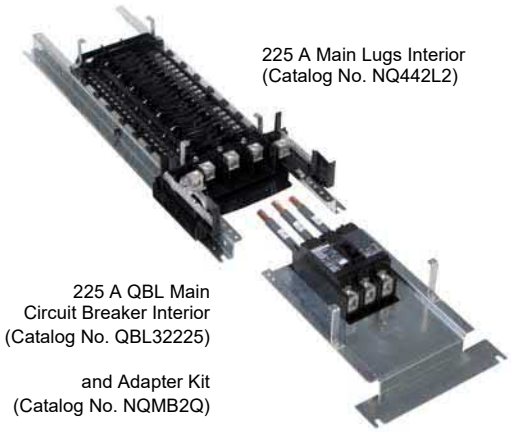

Deadfront Removed

Deadfront Installed

Main Circuit Breaker Interiors

100 A QOB Interior

225 A QBL Interior

- Will accept plug-on or bolt-on branch circuit breakers.
- Merchandised main circuit breaker interiors are suitable for use as service entrance (US only).
- Service entrance barriers are required and available in Canada (factory-assembled only).
- Top- or bottom-feed.
- 65k AIR maximum branch circuit breakers (fully-rated).
- 200k AIR maximum when supplied by I-Limiter circuit breaker (series rated).
- Available with silver-plated copper or tin-plated aluminum bus (aluminum is standard). Tin-plated copper bus is available as an option. Branch connector fingers are all tin-plated copper; silver-plated branch connector fingers are optional.
- 100 A main circuit breaker interiors use a standard main lug interior and an appropriate QOB or QOB-VH main circuit breaker in a branch space; vertical main breaker main breaker interiors are also available.
- 110-225 A main circuit breaker interior consists of:
  - — Standard main lug interior.
  - — Main circuit breaker adaptor kit (NQMB2Q, NQMB2HJ or NQMB2KI).
  - — Appropriate QBL, QDL, QGL, QJL, HDL, HGL, HJL, HLL, JDL, JGL, JJL, JLL, or KIL circuit breaker.
- 250 A main circuit breaker interiors are factory-assembled only.
- 400 A main circuit breaker interiors consist of:
  - — Standard main lug interior
  - — Main circuit breaker adapter kit (Catalog No. NQMB4LA)
  - — Appropriate LAL or LHL circuit breaker
- 600 A main circuit breaker interiors (factory-assembled only) consist of:
  - — Appropriate LCL or LIL circuit breaker

© 2008 Schneider Electric
All Rights Reserved

225 A Maximum Main Lug Interior and Deadfront

100–225 A Maximum 600 A Maximum

Main Lug Interiors

Type VCEL VERSAtile™ Compression Equipment Terminals

Main Lug Interiors

- Will accept plug-on or bolt-on branch circuit breakers.
- Top- or bottom-feed.
- 65k AIR maximum branch circuit breakers (fully-rated).
- 200k AIR maximum when supplied by remote I-Limiter® circuit breaker (series rated).
- 100 A and 225 A interiors are suitable for use as service entrance with back-fed QOB circuit breaker (USA only).
- Field-installable sub-feed lug kits for 100–400 A interiors.
- Factory installed main lugs on all interiors.
- 225–400 A main lug interiors are convertible to main circuit breaker by adding a main circuit breaker and adapter kit.
- Available with silver-plated copper or tin-plated aluminum bus (aluminum is standard). Tin-plated copper bus is available as an option. Branch connector fingers are all tin-plated copper; silver-plated branch connector fingers are optional.

Main lugs for MLO Interiors

Table 4: Aluminum Main lugs for MLO Interiors

Amperes	Catalog Number	Lug Wire Range for wire bending space
Aluminum Mechanical		
100	standard	(1) #6-350 kcmil
225	standard	(1) #6-350 kcmil
400	standard	(1) 1/0-750 kcmil, or (2) 1/0-350 kcmil
600	standard	(2) 1/0-750 kcmil
600[1]	NQALM6A	(3) 1/0-250 kcmil
Aluminum Compression		
100	NQALV1	(1) #4-300 kcmil
225	NQALV2	(1) 250-350 kcmil
400	NQALV4	(2) 2/0-500 kcmil
600	NQALV6	(2) 2/0-500 kcmil

[1] Optional lug for 600 A. Can also be used for 400 A.

Table 5: Copper Main lugs for MLO Interiors

Amperes	Catalog Number	Lug Wire Range for wire bending space
Copper Mechanical		
100	NQCUM1	(1) #6-350 kcmil
225	NQCUM2	(1) #6-350 kcmil
400	NQCUM4	(1) 1/0-750 kcmil, or (2) 1/0-350 kcmil
600	NQCUM6	(2) 1/0-750 kcmil
Copper Compression		
100	NQCUV1	(1) #6-350 kcmil
225	NQCUV2	(1) #6-350 kcmil
400	NQCUV4	(1) 400-750 kcmil
600	NQCUV6	(2) 250-500 kcmil

© 2008 Schneider Electric
All Rights Reserved

Interior Accessories

Branch Mounted Sub-Feed Lug Kits, 240 Vac

Table 6: Branch Mounted Sub-Feed Lugs

Rating Amperes	Number of Poles	Type of Connection	Catalog No.	Main Wire Size
125	2	Bolt-On	QOB2125SL	#4-2/0 Al or Cu
	3		QOB3125SL	

Field-Installable Sub-Feed Main Lugs

225 A Main Lug Interior with Sub-Feed Lugs

- 100 A (NQSFL1)
- 225 A (NQSFL2)
- 400 A (NQSFL4)
  NOTE: Refer to the Digest for the correct box size.

Field installable Through-Feed Lugs

- 225 A (NQFLT2L) for 30 or 42 circuit interiors
- 225 A (NQFLT2H) for 54, 72 or 84 circuit interiors
- 400 A (NQFLT4H) for 30 or 42 circuit interiors or less
- 400 A (NQFLT4L) for 54, 72 or 84 circuit interiors
  NOTE: Refer to the Digest for the correct box size.

Field Installable Sub-Feed Circuit Breaker Kits

Table 7: Field Installable Sub-Feed Circuit Breaker Catalog Numbers

Field Ampere Rating	Catalog Number	Number of Sub-Feed Circuit Breakers and Type
225	NQSFB2Q	1 Q-frame
225	NQSFB2HJ	1 H or J-frame
400	NQSFB4Q	2 Q-frame
400	NQSFB4HJ	2 H or J-frame

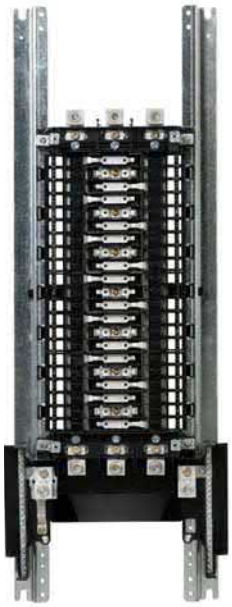

225 A Main Lug Interior with Feed-Through Lugs

Factory-Installed Options

- Sub-Feed Lugs are available on 1ϕ or 3ϕ, 100–400 A main lug interiors only.
- Feed-Through Lugs are available on 1ϕ or 3ϕ 225–600 A main lug, or 225–600 A main circuit breaker interiors.
- Sub-Feed Circuit Breakers
  — Available on 1ϕ or 3ϕ main lugs 225–600 A, or main circuit breaker interiors 225–600 A.
  — One sub-feed circuit breaker for each 225 A panelboard.
  — Two sub-feed circuit breakers for each 400–600 A panelboard.
  — Sub-feed circuit breakers may be type HDL, HGL, HJL, HLL, QBL, QDL, QGL, QJL, JDL, JGL, JJL, OR JLL circuit breakers.

Other Accessories Available:

- Split bus
- Lighting contactors
- Compression lugs
- Copper bus
- Phenolic nameplates

© 2008 Schneider Electric
All Rights Reserved

Branch Circuit Breakers (Bolt-on)

Table 8: Branch Circuit Breakers (Plug-on or Bolt-on) [1]

10 k AIR	22 k AIR	65 k AIR	10 k AIR (240 Vac)	42 k AIR
QO, QOB	**QO-VH, QOB-VH**	**QH, QHB**	**QO-H, QOB-H**	**QOH**
1-Pole 10–70 A	1-Pole 15–30 A	1-Pole 15–30 A	2-Pole 15–100 A	2-Pole 35–125 A
2-Pole 10–125 A	2-Pole 15–150 A	2-Pole 15–30 A		
3-Pole 10–100 A	3-Pole 15–150 A	3-Pole 15–30 A		

[1] Series ratings are also available. Canada: See the Series Rating Guide (data bulletin #S1600PD0302EP) USA: See Switchboard/Panelboard Short-Circuit Current Ratings (data bulletin #2700DB9901), or the Digest

QOB Branch Circuit Breakers

QO Branch Circuit Breakers

Table 9: Branch Circuit Breaker Interrupting Data

Circuit Breaker Catalog Prefix	Max. Vac Rating	Number of Poles	Ampere Rating	Interrupting Rating— RMS Symmetrical Amperes		
				Vac		
				120	120/240	240
QO, QOB	120/240	1	10-70	—	10k	—
	120/240	2	10-125	—	10k	—
	240	3	10-100	—	—	10k
QO-H, QOB-H	240	2	15–125	—	—	10k
QO-VH	120/240	1	15–30	—	22k	—
	120/240	2	15–125	—	22k	—
	240	3	15–100	—	—	22k
QOB-VH	120/240	1	15–30	—	22k	—
	120/240	2	15–150	—	22k	—
	240	3	15–150	—	—	22k
QOH-QOHB	120/240	2	35–125	—	42k	—
QH QHB	120/240	1	15–30	—	65k	—
	120/240	2	15–30	—	65k	—
	240	3	15–30	—	—	65k

Table 10: Additional Branch Circuit Breaker Information

Circuit Breaker Type	Circuit Breaker Catalog Class
QO, QOB	730
QO-AFCI	760
QO-GFI, QOB-GFI	910

© 2008 Schneider Electric
All Rights Reserved

THIS PAGE LEFT INTENTIONALLY BLANK

Strikesorb Options

Strikesorb (AC) Types Available

- **Strikesorb-40**
  This module includes a single MOV disc of 40 mm diameter, provides protection from surges up to 140 kA (8/20 µs), and can be used in all applications.
- **Strikesorb-80**
  This module includes a single MOV disc of 80 mm diameter and provides protection from surges up to 200 kA (8/20 µs). It is recommended for use in locations where the risk of direct lightning strikes is high, or at locations with a history of frequent surge-related equipment failures.

Nominal Operating Voltage: *The normal rms voltage at which the Strikesorb module is designed to operate. This value is determined by the power system voltage.*

For example, if the Strikesorb module is to be connected between line to neutral on a single-phase, 120 V system, then Strikesorb 40-A or Strikesorb 80-A should be used for this application.

Maximum Continuous Operating Voltage (MCOV): *The maximum designated rms value of the voltage that may be continuously applied to the Strikesorb module.*

Maximum Surge Current Rating (8/20 µs): *The maximum surge current (8/20 µs waveform), that the surge suppression module can withstand, as specified in IEEE C62.41-1, without damage or deterioration of its performance.*

There are multiple Strikesorb surge protection modules available, some of the more commonly used for Rayvoss are shown in the table below:

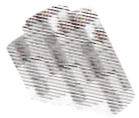

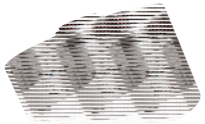

Product ID	Nominal Operating Voltage	Maximum Continuous Operating Voltage (MCOV)	Maximum Surge Current Rating (8/20 µs)	SPD Class I per IEC 61643-11
Strikesorb 40-A	120 V	150 V	140 kA	12.5 kA 10/350 µs
Strikesorb 40-B	240 V	300 V	140 kA	12.5 kA 10/350 µs
Strikesorb 40-C	277 V	350 V	140 kA	12.5 kA 10/350 µs
Strikesorb 40-D	400 V	480 V	140 kA	12.5 kA 10/350 µs
Strikesorb 40-E	480 V	600 V	140 kA	12.5 kA 10/350 µs
Strikesorb 40-F	600 V	750 V	140 kA	12.5 kA 10/350 µs
Strikesorb 40-G	1000 V	1200 V	140 kA	12.5 kA 10/350 µs
Strikesorb 80-A	120 V	150 V	200 kA	25 kA 10/350 µs
Strikesorb 80-B	240 V	300 V	200 kA	25 kA 10/350 µs
Strikesorb 80-C	277 V	350 V	200 kA	25 kA 10/350 µs
Strikesorb 80-D	400 V	480 V	200 kA	25 kA 10/350 µs
Strikesorb 80-E	480 V	600 V	200 kA	25 kA 10/350 µs
Strikesorb 80-F	600 V	750 V	200 kA	25 kA 10/350 µs

Strikesorb Interconnection Options

Modes of Protection

The way that Strikesorb is connected to the power system determines the mode of protection that Strikesorb will provide. There are four possible interconnection options described in the following table:

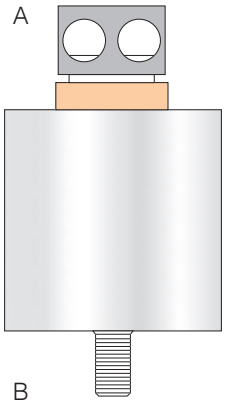

Connector A	Connector B	Mode of Protection	System
L	G	Line-to-Ground (L-G)	Single-phase Split-phase Three-phase
L	N	Line-to-Neutral (L-N)	Single-phase Split-phase Three-phase (with neutral wire)
N	G	Neutral-to-Ground (N-G)	Single-phase Split-phase Three-phase (with neutral wire)
L	L	Line-to-Line (L-L)	Single-phase Split-phase Three-phase

Selecting Module Type

The Strikesorb module selection is based on the following two criteria:

- **Nominal Operating Voltage:** This is the rms voltage measured between the two points (A and B) that Strikesorb module will be connected to.
- **Surge Current Withstand Capability:** In critical applications where severe lightning strikes are expected, Strikesorb 80 should be considered.

Torque Recommendations

The following illustration provides the recommended torque values for secure mounting of Strikesorb modules on ground bars and busbars. In addition, it provides the recommended torque values for attaching the wires into the mechanical connector, for different wire sizes.

Torque Recommendations for Strikesorb Module Assembly

Example:

60 in-lbs = 60 x 0.113 = 6.8 Newton Meters (Nm)

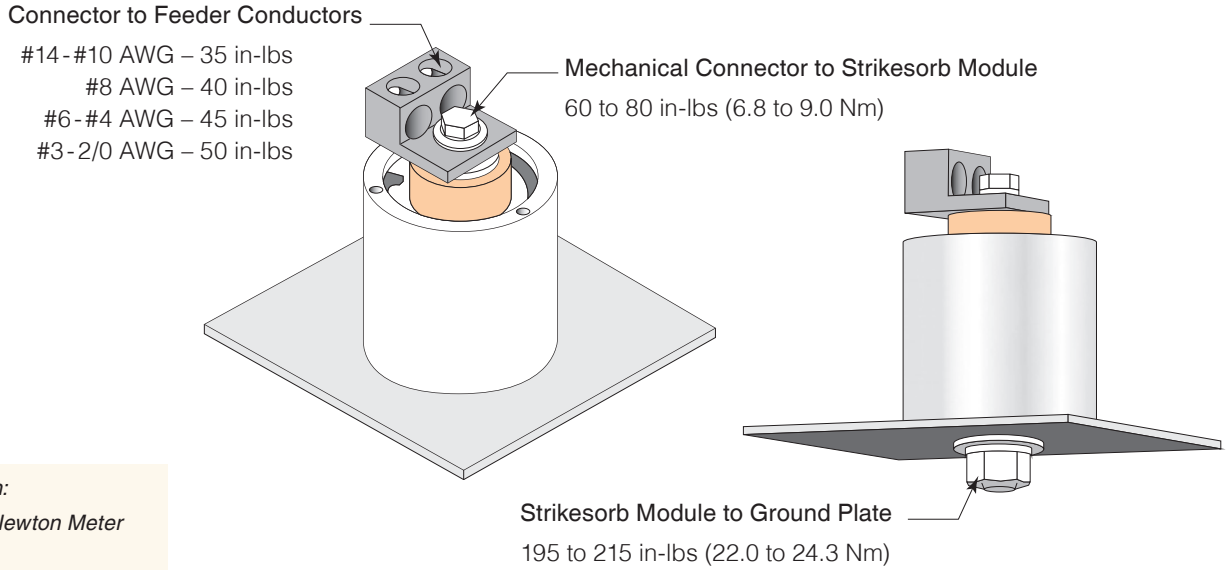

Unit Conversion:
1 in-lb = 0.113 Newton Meter

AWG=American Wire Gauge

Rayvoss® Stand-Alone Surge Protection Devices

Introduction

General

Rayvoss SPD systems deploy Strikesorb suppression modules in a variety of configurations and operating voltages:

- **Single Phase / Split Phase:** 120 V to 240 V
- **Three Phase Wye:** 120/208 V, 220/380 V to 240/415 V, 277/480 V, 347/600 V
- **Three Phase Delta:** 240 V, 480 V, 600 V

Rayvoss SPD products provide continuous protection from lightning, temporary voltage and other transient voltage activity on a stand-alone basis at the building entrance and distribution panels where critical equipment is connected.

Rayvoss System with Four Strikesorb Modules

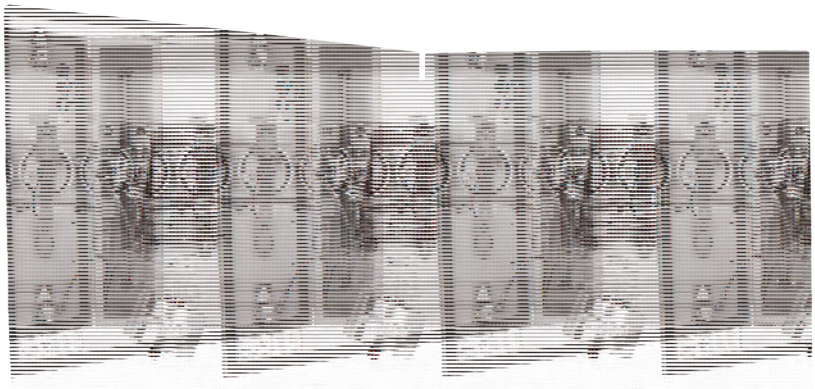

Rayvoss A
277-3Y-A1-4-06-C-H

Rayvoss Product Selection Guide

The Rayvoss Product Selection Guide is a helpful tool when determining the right Rayvoss for an application based on operating voltage, distribution type, enclosure size, and other variables.

The information in this guide is intended to aid in the selection of a Rayvoss SPD suitable for your installation. For further assistance please contact Raycap Sales at info@raycap.com or your area representative.

Operating Voltage	
120	This is the SPD operating Voltage. For single phase or three phase wye (Y) distributions, this is the voltage between Line and Neutral. For Delta (Δ) type distribution, this is the Line to Line Voltage
240	
277	
380	
480	
600	

Distribution Type	
1P	1 Phase
2S	2 Phase – Split Type
3Y	3 Phase – Wye
3D	3 Phase – Delta Δ
3H	3 Phase – Delta Δ High Leg

Enclosure Size NEMA 4 Metal *Stainless steel upon request*		Strikesorb Capacity	
		40	80
A	19.75 x 19.75 x 10.5	7	4 or 7
N	19.75 x 14.75 x 8.5	3, 4 or 7	3
M	12 x 12 x 8.5	2, 3, or 4	2 or 3
S	10 x 8 x 6.5	2 or 3	

Type of Strikesorb	
1	Strikesorb 80
3	Strikesorb 40

Part Number Example 120 - 2S - M3 - 3 - 06 - A - H*

Number of Strikesorbs	
	2
	3
	4
	7

Internal Plate Connection	
0	Connected to Ground
N	Connected to Neutral

Optional Features	
0	No electronics
3	Surge Counter, phase indication LEDs and Remote Relays *(Not available for "S" enclosure)*
6	Phase indication LEDs and remote relay

Strikesorb Operating Voltage (V)	
A	120
B	240
C	277
D	400
E	480
F	600

**For a stainless steel enclosure specify "-SS" in place of the "-H" indication which is for the standard painted NEMA 4 enclosure.*

Electrical System Configuration	General Interconnection Diagram
System Voltage: 120 V / 208 V Three Phase Circuit Type: 3 ϕ, Wye, 4 W + G Protection Mode: L-G, N-G	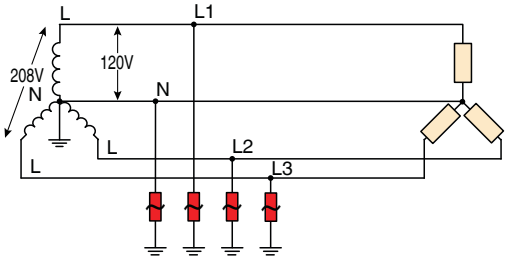

Rayvoss Configuration	Notes	Rayvoss Models
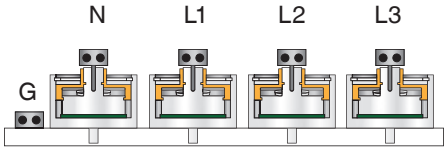	4 module system suitable for most applications	120-3Y-A1-4-0x-A-H 120-3Y-N3-4-0x-A-H 120-3Y-M3-4-0x-A-H

Electrical System Configuration	General Interconnection Diagram
System Voltage: 120 V / 208 V Three Phase Circuit Type: 3 ϕ, Wye, 4 W + G Protection Mode: L-G, L-N, N-G	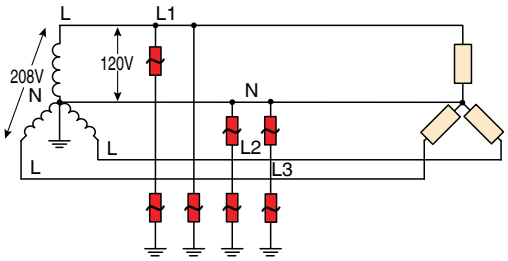

Rayvoss Configuration	Notes	Rayvoss Models
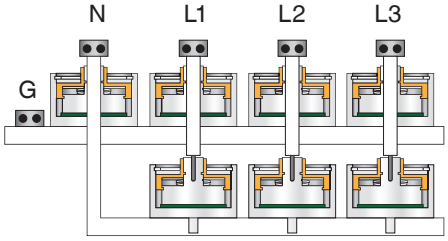	7 module system for applications with sensitive electronic equipment	120-3Y-A1-7-0x-A-H 120-3Y-N3-7-0x-A-H

Electrical System Configuration	General Interconnection Diagram
System Voltage: 277V/480V Three Phase Circuit Type: 3ϕ, Wye, 4W+G Protection Mode: L-G, N-G	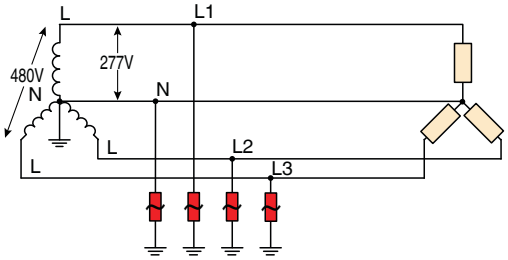

Rayvoss Configuration	Notes	Rayvoss Models
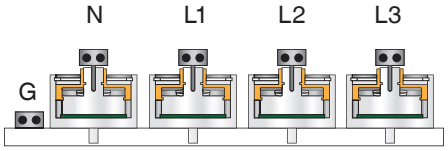	4 module system suitable for most applications	277-3Y-A1-4-0x-C-H 277-3Y-N3-4-0x-C-H 277-3Y-M3-4-0x-C-H

Electrical System Configuration	General Interconnection Diagram
System Voltage: 277V/480V Three Phase Circuit Type: 3ϕ, Wye, 4W+G Protection Mode: L-G, L-N, N-G	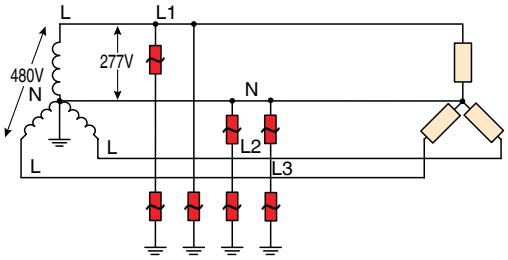

Rayvoss Configuration	Notes	Rayvoss Models
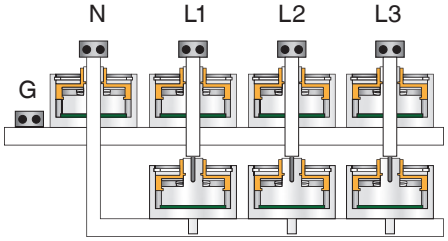	7 module system for applications with sensitive electronic equipment	277-3Y-A1-7-0x-C-H 277-3Y-N3-7-0x-C-H

T-Connection

T-Connection is used in the following situations where direct connection is not possible:

- Line wire size is greater than #4/0 AWG

Because Rayvoss systems can use larger size lead wires, they can be connected using bigger fuses compared to those used in conventional SPD systems even when connected in T-configurations. This allows for continuous protection at higher surge currents, and maximum use of Strikesorb's superior capabilities.

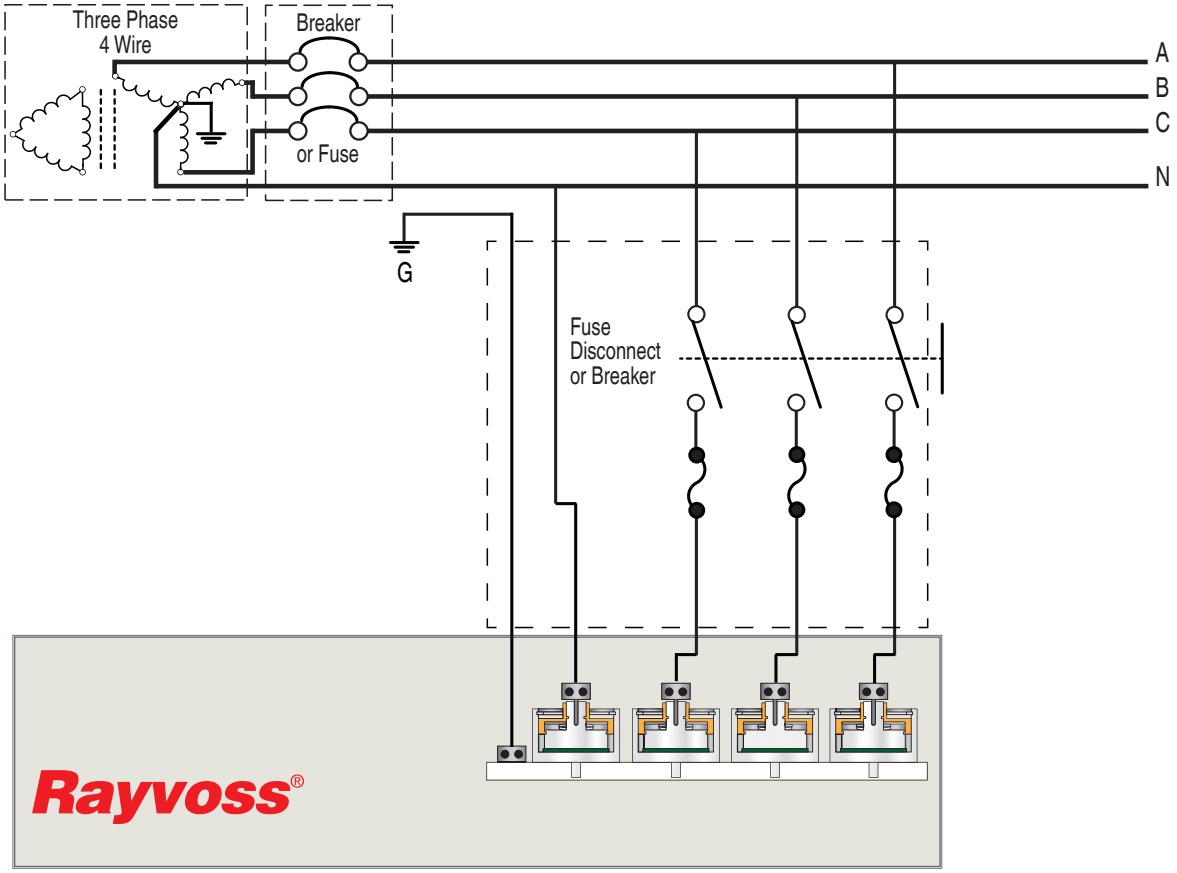

Direct and T-Connection Installation Notes

Rayvoss installations are driven by the size of the enclosure, as indicated in the table below and must comply with the national codes:

Enclosure Type	Enclosure Size	Upstream Protection (Class J Fuse or Circuit Breaker)	Maximum Conductor Size
S	10″ × 8″ × 6.5″ [254.0 × 203.2 × 165.1 mm]	50 A	#6 AWG [10 mm²]
M	12″ × 12″ × 8.5″ [304.8 × 304.8 × 215.9 mm]	100 A	#2 AWG [35 mm²]
N	19.75″ × 14.75″ × 8.5″ [501.65 × 355.6 × 215.9 mm]	225 A	#4/0 AWG [95 mm²]
A	19.75″ × 19.75″ × 10.5″ [501.65 × 501.65 × 266.7 mm]	225 A	#4/0 AWG [95 mm²]

AWG=American Wire Gauge

Installation Instructions

Before installing, make certain the system voltage and configuration on the nameplate is appropriate for your electrical service.

Cautions & Warnings

1. Always select the appropriate Rayvoss type for your electrical system.
2. Rayvoss systems should be installed by qualified electricians.
3. Installation and wiring should conform to the National Electrical Code and applicable local codes.
4. The environmental rating and type of this product will be adversely affected if the incorrect type and rating of conduit fitting or cable gland is installed.
5. Disconnect from energized circuits before installing or servicing.

Mounting

The Rayvoss system needs to be mounted to a solid, flat surface capable of supporting appropriate weight as determined by the size of the enclosure per the table below. It is convenient to install the lower mounting studs/bolts first as the Rayvoss has slotted lower mounting lugs. Once the lower studs/bolts are installed, the Rayvoss may be lowered onto them and the correct location for the upper mounting stud bolts can be marked through the holes in the upper mounting lugs.

Enclosure Type	Enclosure Size		Approximate Support Weight
North American Specifications			
S	10″ × 8″ × 6.5″	[254.0 × 203.2 × 165.1 mm]	11 lbs [4.99 kg]
M	12″ × 12″ × 8.5″	[304.8 × 304.8 × 215.9 mm]	22 lbs [9.98 kg]
N	19.75″ × 14.75″ × 8.5″	[501.65 × 355.6 × 215.9 mm]	47 lbs [21.32 kg]
A	19.75″ × 19.75″ × 10.5″	[501.65 × 501.65 × 266.7 mm]	62 lbs [28.12 kg]
European Specifications			
S	7.87″ × 13.15″ × 6.44″	[199.90 × 334.01 × 163.58 mm]	11 lbs [4.99 kg]
M	11.81″ × 15.12″ × 8.41″	[299.97 × 384.05 × 213.61 mm]	22 lbs [9.98 kg]
N	15.75″ × 21.73″ × 8.41″	[400.05 × 551.94 × 213.61 mm]	47 lbs [21.32 kg]
A	19.69″ × 22.99″ × 10.37″	[500.13 × 583.95 × 263.40 mm]	62 lbs [28.12 kg]

MYERS
EMERGENCY POWER SYSTEMS

Illuminator CM

Emergency Lighting Inverter System

Single Phase Modular Systems
500 VA/W to 2000 VA/W

The Illuminator CM Series Inverter is UL 924 Listed and meets or exceeds the requirements for emergency lighting and power. Additionally, it is NFPA70, NFPA101, NFPA110, UBC, and New York City approved.

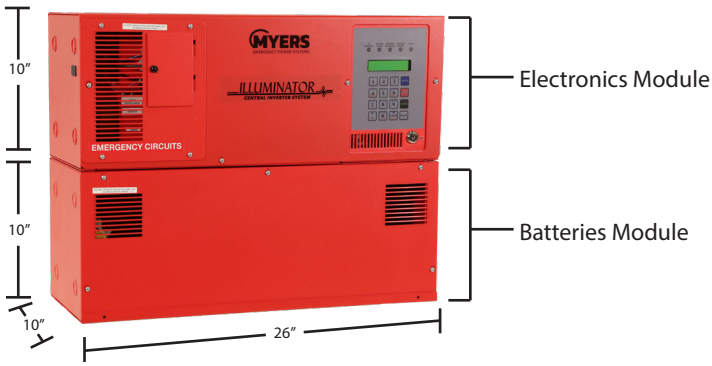

The system's small footprint and modular design allows users to upgrade the unit in the field.

STANDARD FEATURES

- 98% Efficient (Typical)
- 90 Minute Run Time
- Compatible With All Lighting Loads Including LED and HID
- Users Can Separate Inverter and Battery Modules
- Microprocessor Controlled, 2x20 Character Display with Touch Pad Controls Front Panel Interface
- Maintenance-Free Sealed Lead Calcium VRLA Batteries
- Circuit Breaker and Fuse Access Panel for Easy Maintenance
- Self Testing and Diagnostic With Event, Test and Alarm Logs

OPTIONAL FEATURES

- RS-232 Interface
- Summary Alarm Dry Contact
- Extended Run Times
- Wall Mount Brackets
- Output Circuit Breakers
- Circuit Breaker Trip Alarm
- Normally Off Output

SPECIFICATIONS

- Input Voltage 120 or 277VAC 1 Phase 2 Wire Plus Ground
- Output Voltage 120 or 277VAC 1 Phase 2 Wire Plus Ground
- Output Load Power Factor .5 Lag to.5 Lead
- Floor or Wall-Mountable
- Output Distortion Less than 3% THD for Linear Loads
- Other Voltages Available
- 90 Minute Runtime Standard; Other Runtimes Available Upon Request

MYERS EMERGENCY POWER SYSTEMS
44 S. Commerce Way, Bethlehem, PA 18017 | 610-868-3500 | quotes@myerseps.com | www.myerseps.com
Specifications subject to change without notice.

ORDERING GUIDE

Example Model Number:
M-0500-A-BA2002

SYSTEM TYPE
M - Illuminator CM

VA / W
0500
1000
1500
2000

INPUT / OUTPUT VOLTAGE
A - 120V
R - 277V
Z - Other[2]

OUTPUT BREAKERS[3,4]

EXAMPLE
B A 20 02

OUTPUT
B - Normally On
N - Normally Off

VOLTAGE
A - 120
D - 277
Z - Other

AMP RATING[4] (Distribution Breakers)
10, 16, 20, 25

QUANTITY[3]
01-04

OPTIONS
A - Remote Summary Alarm Panel
I - Inverter on Dry Form C Contacts
M - Remote Meter Panel
N - Normally Off
R - RS232
S - Summary Fault Dry Form C Contacts
T - Output Trip (Supervised) Alarm
Z - Seismic Battery Strapping[8]

WARRANTY[5]
2YW - Start Up & Same Day Training
2YWT - Start Up, Same Day Training and Full Run Test
5YP - 5-Year Preventative Maintenance Plan
5YW - 5-Year Extended Electronics Warranty
TR - Training if required on day other than startup

1. VA = W
2. Contact Factory. May affect enclosure size.
3. Maximum output breaker quantity is 4 without trip alarm or 2 with trip alarm.
4. Standard output breaker is 25A, 1-pole for 120V systems or 10A, 1-pole for 277V systems. When optional breakers are ordered, standard breaker is not provided.
5. 1-Year warranty is standard.
6. Needed to mount inverter in horizontal position on wall. Required when option Z (Seismic Battery Strapping) is selected.
7. Adds 5" to system height.
8. Requires Option W - Wall Mount Bracket.

ACCESSORIES
W - Wall Mount Bracket[6]
F - Floor Mount Bracket[7]

= Required feature for part number.
= Optional feature. Not required for part number.

DIMENSIONS

Electronics Module												
					System Voltage				Electronics Cabinet Dimensions			
					120 VAC		277 VAC					
Partial Model Number	Power Rating (VA / W)	Efficiency (% Typical)	Audible Noise (db)	Heat Loss (BTU)	Max. Input Current (A)	Max. Output Current (A)	Max. Input Current (A)	Max. Output Current (A)	Width (in / cm)	Height (in / cm)	Depth (in / cm)	Weight (lbs / kg)
M 0500	500	98	45	34	5.2	4.16	2.3	1.8	26 / 66.04	10 / 25.4	10 / 25.4	72 / 33
M 1000	1000	98	45	68	10.5	8.33	4.6	3.61	26 / 66.04	10 / 25.4	10 / 25.4	72 / 33
M 1500	1500	98	45	102	15.62	12.5	6.8	5.41	26 / 66.04	10 / 25.4	10 / 25.4	72 / 33
M 2000	2000	98	45	136	20.8	16.6	9.1	7.22	26 / 66.04	10 / 25.4	10 / 25.4	72 / 33

Batteries Module (90 Minutes @ Full Load)								Total System		
				Battery Cabinet Dimensions						
Model Number	90 Minutes Batteries (lbs / kg)	Number of Batteries	Current (ADC)	Width (in / cm)	Height (in / cm)	Depth (in / cm)	Quantity of Battery Cabinets	Quantity of Cabinets	Weight (lbs / kg)	Dimensions W" x H" x D"
M 0500	108 / 49	4	13.5	26 / 66.04	10 / 25.4	10 / 25.4	1	2	202 / 92	26" x 20" x 10"
M 1000	216 / 98	8	26.5	26 / 66.04	10 / 25.4	10 / 25.4	2	3	332 / 151	26" x 30" x 10"
M 1500	324 / 147	12	40	26 / 66.04	10 / 25.4	10 / 25.4	3	4	462 / 210	26" x 40" x 10"
M 2000	432 / 196	16	56	26 / 66.04	10 / 25.4	10 / 25.4	4	5	592 / 269	26" x 50" x 10"

1/C CU 600V XLPE XHHW-2 PVC Power Cable

Power Cable 600Volt Single Conductor Copper, Cross Linked Polyethylene (XLPE) insulation XHHW-2 Polyvinyl Chloride (PVC) Jacket

Image not to scale. See Table 1 for dimensions.

CONSTRUCTION:

1. **Conductor:** Class B compressed stranded bare copper per ASTM B3 and ASTM B8
2. **Insulation:** Cross Linked Polyethylene (XLPE) Type XHHW-2
3. **Overall Jacket:** Polyvinyl Chloride (PVC) Jacket

APPLICATIONS AND FEATURES:

Southwire's 600 Volt power cables are suited for use in wet and dry areas, conduits, ducts, troughs, trays, aerial supported by a messenger, and where superior electrical properties are desired. These cables are capable of operating continuously at the conductor temperature not in excess of 90°C for normal operation in wet and dry locations, 130°C for emergency overload, and 250°C for short circuit conditions. For uses in Class I, II, and III, Division 2 hazardous locations per NEC Article 501 and 502.

SPECIFICATIONS:

- ASTM B3 Standard Specification for Soft or Annealed Copper Wire
- ASTM B8 Concentric-Lay-Stranded Copper Conductors
- UL 44 Thermoset-Insulated Wires and Cables
- UL 1685 FT4 Vertical-Tray Fire Propagation and Smoke Release Test
- ICEA S-58-679 Control Cable Conductor Identification Method 4
- ICEA S-95-658 (NEMA WC70) Power Cables Rated 2000 Volts or Less for the Distribution of Electrical Energy
- IEEE 1202 FT4 Flame Test (70,000) BTU/hr Vertical Tray Test

SAMPLE PRINT LEGEND:

SOUTHWIRE EXXXXX #P# (UL) [#AWG Or #kcmil] CU XHHW-2 XLPE/PVC 600V For CT USE SUN. RES. FT4 YEAR (NESC) [SEQUENTIAL FEET MARKS]

Copyright © 2020 Southwire Company, LLC. All Rights Reserved

Table 1 – Weights and Measurements

Stock Number	Cond. Size	Diameter Over Conductor	Insul. Thickness	Diameter Over Insulation	Jacket Thickness	Approx. OD	Copper Weight	Approx. Weight
	AWG/ Kcmil	inch	mil	inch	mil	inch	lb/1000ft	lb/1000ft
TBA	1/0	0.360	55	0.470	45	0.560	326	412
890181	2/0	0.404	55	0.514	45	0.604	411	506
TBA	3/0	0.454	55	0.564	45	0.654	518	623
TBA	4/0	0.510	55	0.620	45	0.710	653	770
TBA	250	0.558	65	0.688	45	0.778	772	907
TBA	300	0.611	65	0.741	65	0.871	926	1104
890179	350	0.661	65	0.791	65	0.921	1081	1271
890022	500	0.789	65	0.919	65	1.049	1544	1766
TBA	600	0.866	80	1.026	65	1.156	1853	2118
890024	750	0.968	80	1.128	65	1.258	2316	2607
TBA	1000	1.117	80	1.277	65	1.407	3088	3418

All dimensions are nominal and subject to normal manufacturing tolerances
◊ Cable marked with this symbol is a standard stock item

Table 2 – Electrical and Engineering Data

Stock Number	Cond. Size	Min Bending Radius	Max Pull Tension	DC Resistance @ 25°C	AC Resistance @ 90°C	Inductive Reactance @ 60Hz	Shield Short Circuit Current 6 Cycles	Allowable Ampacity At 60°C†	Allowable Ampacity At 75°C†	Allowable Ampacity At 90°C†
	AWG/ Kcmil	inch	lb	Ω/1000ft	Ω/1000ft	Ω/1000ft	Amp	Amp	Amp	Amp
TBA	1/0	2.2	845	0.102	0.128	0.032	24011	125	150	170
890181	2/0	2.4	1065	0.081	0.102	0.031	30264	145	175	195
TBA	3/0	2.6	1342	0.064	0.081	0.030	38154	165	200	225
TBA	4/0	2.8	1693	0.051	0.064	0.029	48114	195	230	260
TBA	250	3.1	2000	0.043	0.055	0.029	56845	215	255	290
TBA	300	3.5	2400	0.036	0.046	0.030	68214	240	285	320
890179	350	3.7	2800	0.031	0.039	0.029	79583	260	310	350
890022	500	5.2	4000	0.022	0.028	0.028	113690	320	380	430
TBA	600	5.8	4800	0.018	0.024	0.028	136428	350	420	475
890024	750	6.3	6000	0.014	0.020	0.028	170535	400	475	535
TBA	1000	7.0	8000	0.011	0.016	0.027	227380	455	545	615

† Ampacities are based on Table 310.15 (B)(16) of the NEC, 2017 Edition. Ampacities of insulated conductors rated up to and including 2000 Volts, based on ambient temperature of 30°C (86°F)

Copyright © 2020 Southwire Company, LLC. All Rights Reserved

SIM*pull* THHN®

Copper THHN Wire & Cable

600 Volts. Copper Conductor. Thermoplastic Insulation/Nylon Sheath, Heat, Moisture, Gasoline and Oil Resistant II. All Sizes Rated Both THHN and either THWN (sizes 14, 12, and 10 AWG) or THWN-2 (sizes 8 AWG and larger). Also Rated MTW and AWM (See Below). SIMpull® Technology for Easier Pulling.

APPLICATIONS

Southwire® SIM*pull* THHN® copper conductors are primarily used in conduit and cable trays for services, feeders and branch circuits in commercial or industrial applications as specified in the National Electrical Code. Voltage for all applications is 600 volts. SIM*pull* THHN® copper conductors are designed to be installed without application of a pulling lubricant.

These conductors have multiple ratings. Depending upon the product application, allowable temperatures are as follows:

- THHN or T90 Nylon- Dry locations not to exceed 90° C
- THWN-2- Wet or dry locations not to exceed 90° C or locations not to exceed 75° C when exposed to oil
- THWN- Wet locations not to exceed 75° C or dry locations not to exceed 90° C or locations not to exceed 75° C when exposed to oil
- TWN75- Wet locations not to exceed 75° C
- MTW- Wet locations or when exposed to oil at temperatures not to exceed 60° C or dry locations not to exceed 90° C (with ampacity limited to that for 75° C conductor temperature per NFPA 79)
- AWM- Dry locations not to exceed 105° C only when rated and used as appliance wiring material

STANDARDS & REFERENCES

Southwire® SIM*pull* THHN® copper conductors comply with the following:

- ASTM - B3, B8, and B787 (19 Wire Combination Unilay-Stranded)
- UL Standards 83, 758, 1063, and 1581
- CSA C22.2 No. 75, T90 Nylon/TWN75 Sizes through 1000 kcmil
- NOM-ANCE 90° C
- Federal Specification A-A-59544
- NEMA WC-70 (ICEA S-95-658) Construction Requirements
- National Electrical Code, NFPA 70
- CT Rated in Sizes 1/0 AWG and larger
- VW-1 - Sizes 14 through 1 AWG
- FT1 - All Sizes
- Sunlight Resistant – Sizes 2 AWG and larger
- AWM - Sizes 14 through 6 AWG
- MTW - Stranded Constructions Only
- RoHS/REACH Compliant

CONSTRUCTION

Southwire® SIM*pull* THHN® copper conductors are made with soft drawn copper. Sizes 14 through 4/0 AWG use a combination-unilay stranding while 250 kcmil and larger sizes use a compressed copper stranding. The wire is covered with a tough heat and moisture resistant PVC insulation with an overall nylon jacket utilizing SIM*pull*® Technology. Available in black, white, red, blue, purple, green, yellow, orange, brown, and gray. Also available in striped configurations. Some colors are subject to economic order quantity. Marked as THHN in all sizes. Also marked as THWN-2 in sizes 8 AWG and larger or marked as THWN in sizes 14, 12, and 10 AWG. Marked sunlight resistant in sizes 2 AWG and larger. Sizes 14, 12, and 10 AWG are available with SIM*pull*® Technology only in SIM*pull* BARREL™ cable drum or SIM*pull*® *Coil*PAK™ configurations.

©2015 Southwire Company, LLC. All rights reserved. ®Registered Trademark and ™Trademark of Southwire Company, LLC.
One Southwire Drive, Carrollton, GA 30119, USA

Conductor		Insulation Thickness (mils)	Jacket Thickness (mils)	Nominal O.D. (mils)	Approx. Net Wt. Per 1000' (lbs.)	Allowable Ampacities+			Standard Package
Size (AWG or kcmil)	No. of strands					60°C	75°C	90°C	
14*	1	15	4	102	15	15	15	15	AC
12*	1	15	4	119	23	20	20	20	AC
10*	1	20	4	150	36	30	30	30	AC
14*	19	15	4	109	16	15	15	15	AC
12*	19	15	4	128	24	20	20	20	AC
10*	19	20	4	161	38	30	30	30	AC
8	19	30	5	213	63	40	50	55	ABCD
6	19	30	5	249	95	55	65	75	ABCD
4	19	40	6	318	152	70	85	100	ABCD
3	19	40	6	346	189	85	100	115	ABCD
2	19	40	6	378	234	95	115	130	ABCD
1	19	50	7	435	299	110	130	145	ABCD
1/0	19	50	7	474	372	125	150	170	ABCD
2/0	19	50	7	518	462	145	175	195	ABCD
3/0	19	50	7	568	575	165	200	225	ABCD
4/0	19	50	7	624	718	195	230	260	ABCD
250	37	60	8	694	851	215	255	290	ABCD
300	37	60	8	747	1012	240	285	320	ABC
350	37	60	8	797	1174	260	310	350	ABC
400	37	60	8	842	1334	280	335	380	ABC
500	37	60	8	926	1655	320	380	430	ABCD
600	61	70	9	1024	1987	350	420	475	ABC
750	61	70	9	1126	2464	400	475	535	BC
1000	61	70	9	1275	3257	455	545	615	C

* Sizes 14, 12, and 10 AWG are available with SIMpull® Technology only in SIMpull® Barrel or CoilPAK® configurations. Standard put ups vary from the ones shown on this chart for standard 14-10 AWG THHN.

+Allowable ampacities shown are for general use as specified by the 2014 Edition of the National Electrical Code Sections 310.15 and 240.4(D).

Unless the equipment is marked for use at higher temperatures the conductor shall be limited to the following per NEC 110.14(C):

60° C - When terminated to equipment for circuits rated 100 amperes or less or marked for 14 - 1 AWG conductors.

75° C - When terminated to equipment for circuits rated over 100 amperes or marked for conductors larger than 1 AWG.

90° C - THHN dry locations and THWN-2 wet or dry locations for ampacity adjustment purposes using NEC section 310.15.

Package Codes:
A - 2500' Reel
B - 1000' Reel
C - 500' Spool
D - 5000' Reel

©2015 Southwire Company, LLC. All rights reserved. ®Registered Trademark and ™Trademark of Southwire Company, LLC.
One Southwire Drive, Carrollton, GA 30119, USA

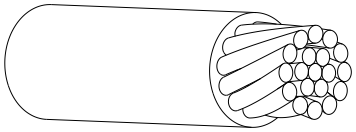

#2-19G
Green Insulated Conductor

APPLICATION

- Type THHN Building Wire is intended for general purpose applications and may be installed in conduit, duct, or other recognized raceways in wet (60°C oil/90°C water) or dry (105°C) locations.
- For both new work and rewiring applications, the smaller diameter of the wire permits additional circuits or larger conductors to be installed in the conduit without exceeding maximum fill limitations.
- The insulation is a high quality, heat and moisture resistant polyvinyl chloride compound over which a heat and light stabilized nylon jacket is tightly applied.

STANDARDS

- Underwriters' Laboratories UL 83
- Federal Specification JC-30A
- Gasoline and Oil Resistant II (UL)

SPECIFICATIONS

- Sunlight Resistance
- VW-1 Flame Resistant
- Lead Free-ROHS Compliant
- 600V

Size AWG	Number of Strands	Insulation Thickness in Mils PVC	Insulation Thickness in Mils Nylon	Approx. O.D. Inches	Ampacity (1) 75°C	Ampacity (1) 90°C	Approx. Wgt. per 1000' in Lbs.
2	19	40	6	.40	115	130	240

(1) Based on not more than 3 conductors in Raceway or cable or direct burial (30°C, 86°F Ambient) per NEC. 75°C conductor temperature rating.

301 Ziegler Drive, Grayslake, IL 60030
847-548-8700 • 800-842-7437 • Fax: 847-548-8755
Web-site: www.harger.com • E-mail: hargersales@harger.com

THIS PAGE LEFT INTENTIONALLY BLANK

Galvanized Rigid Conduit (GRC) and Kwik-Couple® GRC

allied TUBE & CONDUIT®
A PART OF atkore INTERNATIONAL

Galvanized Rigid Conduit (GRC)

- Hot-dip galvanized for excellent corrosion resistance
- High strength ductile steel for long life and easy bending
- Smooth, continuous raceways for fast wire pulling
- Kwik-Release End Cap to protect threads
- True Color™ GRC special orders available
- Listed to Safety Standard UL 6
- Manufactured in accordance with ANSI C80.1
- Available in sizes 1/2 (16) - 6 (155)

Quality, Long Lasting Heavy Duty Steel Conduit

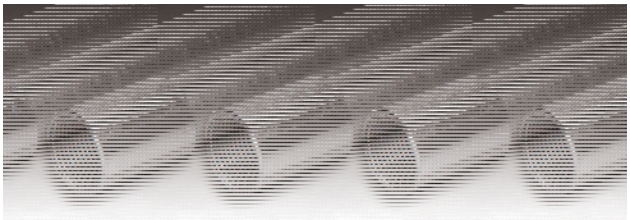

Kwik-Couple Galvanized Rigid Conduit (GRC)

- Similar Benefits to standard GRC Conduit*
- Factory installed Kwik-Couple™ couplings are available on GRC conduit

  Just line up the ends, spin the coupling forward onto the next piece and wrench tighten. It's that easy!
- No separate couplings to purchase, inventory or install
- Kwik-Release End Cap to protect threads
- True Color™ Kwik-Couple® GRC special orders available
- Manufactured in accordance with ANSI C80.1
- Available in sizes 2 1/2 (63) - 5 (129)

*Kwik-Couple GRC does not contain a listing for wet locations and is not approved for Class I Division I locations.

Chart on the following page

For Faster Installations Use the Kwik-Couple GRC Connection

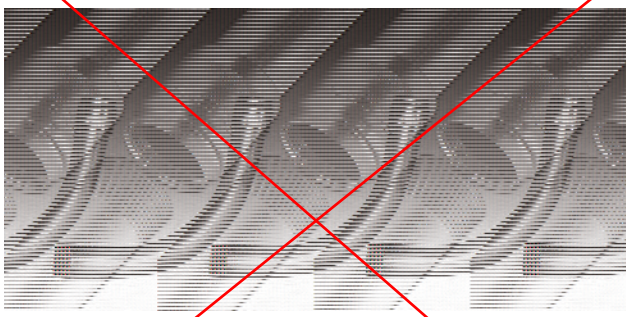

Kwik-Couple Rigid Elbows

- Also available with pre-installed Kwik-Couple Couplings
- Made to order, contact us for lead times

* U.S. Patent Numbers 7,404,582 and 7,726,001.

Galvanized Rigid Conduit (GRC)

Listed to UL 6, manufactured in accordance with ANSI C80.1

Trade Size	Metric Designator	Outside Diameter[1]		Nominal Wall Thickness[2]		Approximate Weight Per 100 Ft. (30.5M)		Quantity in Master Bundle*	
		in	mm	in	mm	lb	kg	ft	m
1/2	16	0.840	21.34	0.104	2.64	82	37.2	2500	762.5
3/4	21	1.050	26.67	0.107	2.72	109	49.4	2000	610.0
1	27	1.315	33.40	0.126	3.20	161	73.0	1250	381.3
1 1/4	35	1.660	42.16	0.133	3.38	218	98.9	900	274.5
1 1/2	41	1.900	48.26	0.138	3.51	263	119.3	800	244.0
2	53	2.375	60.33	0.146	3.71	350	158.8	600	183.0
2 1/2	63	2.875	73.03	0.193	4.90	559	253.6	370	112.9
3	78	3.500	88.90	0.205	5.21	727	329.8	300	91.5
3 1/2	91	4.000	101.60	0.215	5.46	880	399.2	250	76.3
4	103	4.500	114.30	0.225	5.72	1030	467.2	200	61.0
5	129	5.563	141.30	0.245	6.22	1520	689.5	150	45.8
6	155	6.625	168.28	0.266	6.76	1785	809.7	100	30.5

[1] Tolerances: Trade Size 1/2 to 1-1/2: ±0.015" (0.38mm); Trade Size 2-6: ±1%
Length equals 10 ft. (3.05m) with a tolerance of +/- .25 in. (6.35mm)
[2] For information only. Not a requirement of the UL standard.
* NEMA RN-3 Standard

Project Information

Company Name: _____
Address: _____
City: _____
State & Zip: _____
Phone: _____
Project Name: _____
City: _____
State: _____

NOTE: Special orders are non-cancelable, non-returnable and non-refundable

Galvanized Rigid Conduit (GRC) Couplings & Elbows

Galvanized Rigid Conduit (GRC) Couplings

Manufactured to Underwriters Laboratory Safety Standards UL 6
Manufactured in accordance with ANSI C80.1

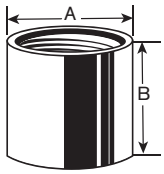

Trade Size	Metric Designator	Nominal O.D. (A)[2]		Length (B)[1]		Threads Per Inch[1]	Approximate Weight Per 100 Pieces		Standard Package
		in	mm	in	mm		lb	kg	
1/2	16	1.01	25.7	1 5/8	41.3	14	12	5.4	100
3/4	21	1.25	31.8	1 41/64	41.7	14	18	8.2	50
1	27	1.53	38.7	1 31/32	50.0	11 1/2	30	13.6	30
1 1/4	35	1.87	47.5	2 1/32	51.6	11 1/2	37	16.8	25
1 1/2	41	2.16	54.7	2 1/16	52.4	11 1/2	52	23.6	25
2	53	2.65	67.3	2 1/8	54.0	11 1/2	72	32.7	20
2 1/2	63	3.25	82.6	3 3/16	81.0	8	170	77.1	1
3	78	3.87	98.3	3 5/16	84.1	8	210	95.3	1
3 1/2	91	4.50	114.3	3 13/32	86.5	8	340	154.2	1
4	103	4.88	123.8	3 33/64	89.3	8	300	136.1	1
5	129	6.00	152.4	3 61/64	100.4	8	475	215.5	1
6	155	7.20	182.9	4 1/4	108.0	8	765	347.0	1

[1]Mimimum requirement as per UL Standard

Galvanized Rigid Conduit (GRC) 90 Degree Elbows

Listed to UL Safety Standard 6
Manufactured in accordance with ANSI C80.1

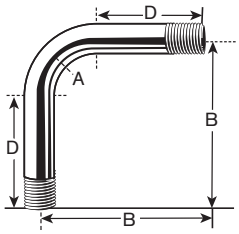

Trade Size	Metric Designator	Radius (A)[1]		Offset (B)[2]		Straight (D)[1]		Approximate Weight Per 100 Pieces		Standard Package
		in	mm	in	mm	in	mm	lb	kg	
1/2	16	4	102	5 7/8	149	1 1/2	38	68	30.8	50
3/4	21	4 1/2	114	7	178	1 1/2	38	109	49.4	50
1	27	5 3/4	146	8 3/4	222	1 7/8	48	201	91.2	25
1 1/4	35	7 1/4	184	10 3/4	273	2	51	336	152.4	20
1 1/2	41	8 1/4	210	12 1/4	311	2	51	460	208.7	15
2	53	9 1/2	241	14 1/2	368	2	51	729	330.7	10
2 1/2	63	10 1/2	267	17	432	3	76	1374	623.2	1
3	78	13	330	19 5/8	498	3 1/8	79	2045	927.6	1
3 1/2	91	15	381	22 3/4	578	3 1/4	83	2860	1297.3	1
4	103	16	406	23 7/8	606	3 3/8	86	3519	1596.2	1
5	129	24	610	34 7/8	886	3 5/8	92	6942	3148.9	1
6	155	30	762	45 1/2	1156	3 3/4	95	11960	5425.1	1

[1]Mimimum requirement as per UL Standard
[2]For information only, not a requirement as per UL Standard
Sizes 2 1/2 (63) and larger shipped in palletized cartons or bulk.
Also available in the following Degrees (60°, 45°, 30°, 22-1/2°, 15° & 11-1/4°)

KWIK-COUPLE ELBOWS AVAILABLE
by special order in Trade Size 2-1/2 to 5

NOTE: Special orders are non-cancelable, non-returnable and non-refundable

16100 S. Lathrop Ave., Harvey, IL 60426
Phone / 708.339.1610 • Toll-Free / 800.882.5543
www.alliedeg.com

Galvanized Rigid Conduit (GRC) Elbows

Galvanized Rigid Conduit (GRC) 45 Degree Elbows

Listed to UL Safety Standard 6
Manufactured in accordance with ANSI C80.1

Trade Size	Metric Designator	Radius (A)[1]		Offset (B)[2]		Offset (C)[2]		Straight (D)[1]		Approximate Weight Per 100 Pieces		Standard Package
		in	mm	in	mm	in	mm	in	mm	lb	kg	
1/2	16	4	102	7	178	2 7/8	73	1 1/2	38	55	24.9	50
3/4	21	4 1/2	114	7 7/8	200	3 1/4	83	1 1/2	38	82	37.2	50
1	27	5 3/4	146	9 5/8	244	4	102	1 7/8	48	148	67.1	25
1 1/4	35	7 1/4	184	11 1/8	283	4 5/8	117	2	51	232	105.2	20
1 1/2	41	8 1/4	210	13 1/8	333	5 3/8	137	2	51	329	149.2	15
2	53	9 1/2	241	15 3/4	400	6 1/2	165	2	51	525	238.1	10
2 1/2	63	10 1/2	267	17 1/2	445	7 1/4	184	3	76	932	422.8	1
3	78	13	330	21 7/8	556	9	229	3 1/8	79	1515	687.2	1
3 1/2	91	15	381	26 1/8	664	10 7/8	276	3 1/4	83	2200	997.9	1
4	103	16	406	26 1/4	667	10 7/8	276	3 3/8	86	2575	1168.0	1
5	129	24	610	35 7/8	911	14 7/8	378	3 5/8	92	4783	2169.6	1
6	155	30	762	43 3/8	1102	18	457	3 3/4	95	7590	3442.8	1

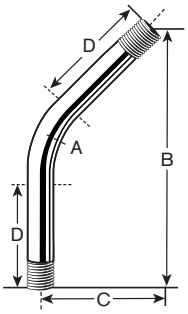

[1]Mimimum requirement as per UL Standard
[2]For information only, not a requirement as per UL Standard
Sizes 2 1/2 (63) and larger shipped in palletized cartons or bulk.
Also available in the following Degrees (60°, 45°, 30°, 22-1/2°, 15° & 11-1/4°)

KWIK-COUPLE ELBOWS AVAILABLE
by special order in Trade Size 2-1/2 to 5

Galvanized Rigid Conduit (GRC) Large Radius 90 Degree Elbows

Listed to UL Safety Standard 6
Manufactured in accordance with ANSI C80.1

Trade Size	Metric Designator	Radius (A)		Offset (B)[2]		Straight (D)[2]		Approximate Weight Per 100 Pieces	
		in	mm	in	mm	in	mm	lb	kg
1	27	12	305	20 5/8	524	8 5/8	219	483	219.1
1	27	15	381	24 1/4	616	9 1/4	235	564	255.8
1	27	18	457	27 7/8	708	9 7/8	251	644	292.1
1	27	24	610	34 5/8	879	10 5/8	270	792	359.3
1	27	30	762	41	1041	11	279	926	420.0
1	27	36	914	46 3/4	1187	10 3/4	273	1047	474.9
1	27	42	1067	54	1372	12	305	1208	547.9
1	27	48	1219	61 1/4	1556	13 1/4	337	1369	621.0
1 1/4	35	12	305	20 5/8	524	8 5/8	219	654	296.7
1 1/4	35	15	381	24 1/4	616	9 1/4	235	763	346.1
1 1/4	35	18	457	27 7/8	708	9 7/8	251	872	395.5
1 1/4	35	24	610	34 5/8	879	10 5/8	270	1072	486.3
1 1/4	35	30	762	41	1041	11	279	1254	568.8
1 1/4	35	36	914	46 3/4	1187	10 3/4	273	1417	642.8
1 1/4	35	42	1067	54	1372	12	305	1635	741.6
1 1/4	35	48	1219	61 1/4	1556	13 1/4	337	1853	840.5

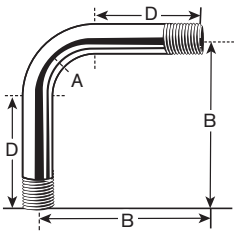

[2]For information only, not a requirement as per UL Standard
Shipped in palletized cartons or bulk.
Also available in the following Degrees (90°, 60°, 30°, 22-1/2°, 15° & 11-1/4°)

Chart continued on the next page

NOTE: Special orders are non-cancelable, non-returnable and non-refundable

16100 S. Lathrop Ave., Harvey, IL 60426
Phone / 708.339.1610 • Toll-Free / 800.882.5543
www.alliedeg.com

Galvanized Rigid Conduit (GRC) Elbows

Galvanized Rigid Conduit (GRC) Large Radius 90 Degree Elbows (continued)

Listed UL Safety Standard 6
Manufactured in accordance with ANSI C80.1

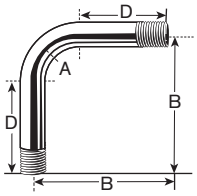

Trade Size	Metric Designator	Radius (A)		Offset (B)[2]		Straight (D)[2]		Approximate Weight Per 100 Pieces	
		in	mm	in	mm	in	mm	lb	kg
1 1/2	41	12	305	20 5/8	524	8 5/8	219	789	357.9
1 1/2	41	15	381	24 1/4	616	9 1/4	235	921	417.8
1 1/2	41	18	457	27 7/8	708	9 7/8	251	1052	477.2
1 1/2	41	24	610	34 5/8	879	10 5/8	270	1293	586.5
1 1/2	41	30	762	41	1041	11	279	1512	685.8
1 1/2	41	36	914	46 3/4	1187	10 3/4	273	1710	775.7
1 1/2	41	42	1067	54	1372	12	305	1973	895.0
1 1/2	41	48	1219	61 1/4	1556	13 1/4	337	2236	1014.2
2	53	15	381	24 1/4	616	9 1/4	235	1225	555.7
2	53	18	457	27 7/8	708	9 7/8	251	1400	635.0
2	53	24	610	30 3/8	772	6 3/8	162	1473	668.2
2	53	30	762	41	1041	11	279	2013	913.1
2	53	36	914	46 3/4	1187	10 3/4	273	2275	1031.9
2	53	42	1067	54	1372	12	305	2625	1190.7
2	53	48	1219	61 1/4	1556	13 1/4	337	2975	1349.5
2 1/2	63	18	457	24 3/8	619	6 3/8	162	1910	866.4
2 1/2	63	24	610	31 1/8	791	7 1/8	181	2422	1098.6
2 1/2	63	30	762	37 1/2	953	7 1/2	191	2888	1310.0
2 1/2	63	36	914	44 3/4	1137	8 3/4	222	3447	1563.6
2 1/2	63	42	1067	54	1372	12	305	4193	1901.9
2 1/2	63	48	1219	61 1/4	1556	13 1/4	337	4752	2155.5
3	78	15	381	24 1/4	616	9 1/4	235	2545	1154.4
3	78	18	457	24 3/8	619	6 3/8	162	2484	1126.7
3	78	24	610	33 1/8	841	9 1/8	232	3393	1539.1
3	78	30	762	38 5/8	981	8 5/8	219	3892	1765.4
3	78	36	914	46 7/8	1191	10 7/8	276	4741	2150.5
3	78	42	1067	54	1372	12	305	5453	2473.5
3	78	48	1219	60 1/4	1530	12 1/4	311	6058	2747.9
3	78	60	1524	75 7/8	1927	15 7/8	403	7634	3462.8
3 1/2	91	18	457	26 3/8	670	8 3/8	213	3300	1496.9
3 1/2	91	24	610	35 1/8	892	11 1/8	283	4400	1995.8
3 1/2	91	30	762	38 1/2	978	8 1/2	216	4693	2128.7
3 1/2	91	36	914	47	1194	11	279	5757	2611.4
3 1/2	91	42	1067	54	1372	12	305	6600	2993.8
3 1/2	91	48	1219	60 1/4	1530	12 1/4	311	7333	3326.2
4	103	18	457	27 3/8	695	9 3/8	238	4034	1829.8
4	103	24	610	35 1/8	892	11 1/8	283	5150	2336.0
4	103	30	762	39 3/8	1000	9 3/8	238	5644	2560.1
4	103	36	914	47	1194	11	279	6738	3056.4
4	103	42	1067	54	1372	12	305	7725	3504.1
4	103	48	1219	60 1/4	1530	12 1/4	311	8583	3893.2
4	103	60	1524	75 7/8	1927	15 7/8	403	10815	4905.7

[2]For information only, not a requirement as per UL Standard
Shipped in palletized cartons or bulk.
Also available in the following Degrees (60°, 45°, 30°, 22-1/2°, 15° & 11-1/4°)

Chart continued on the next page

KWIK-COUPLE AVAILABLE
Trade Size 2-1/2 to 5 by special order

NOTE: Special orders are non-cancelable, non-returnable and non-refundable

16100 S. Lathrop Ave., Harvey, IL 60426
Phone / 708.339.1610 • Toll-Free / 800.882.5543
www.alliedeg.com

Galvanized Rigid Conduit (GRC) Elbows & Nipples

Galvanized Rigid Conduit (GRC) Large Radius 90 Degree Elbows (continued)

Listed to UL Safety Standard 6
Manufactured in accordance with ANSI C80.1

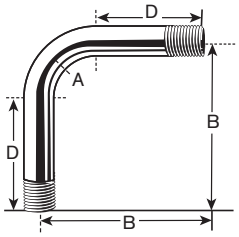

Trade Size	Metric Designator	Radius (A)		Offset (B)[2]		Straight (D)[2]		Approximate Weight Per 100 Pieces	
		in	mm	in	mm	in	mm	lb	kg
5	129	36	914	50 3/4	1289	14 3/4	375	10033	4551.0
5	129	48	1219	65 1/4	1657	17 1/4	438	12833	5821.0
5	129	60	1524	75 7/8	1927	15 7/8	403	14700	6667.9
6	155	36	914	50 3/4	1289	14 3/4	375	13187	5981.6
6	155	48	1219	65 1/4	1657	17 1/4	438	16867	7650.9
6	155	60	1524	75 7/8	1927	15 7/8	403	19320	8763.6

[2]For information only, not a requirement as per UL Standard
Shipped in palletized cartons or bulk.
Also available in the following Degrees (60°, 45°, 30°, 22-1/2°, 15° & 11-1/4°)

KWIK-COUPLE AVAILABLE
Trade Size 2-1/2 to 5 by special order

Galvanized Rigid Conduit (GRC) Nipples

Listed to UL Safety Standard 6
Manufactured in accordance with ANSI C80.1

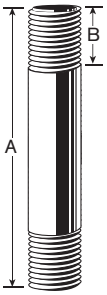

Trade Size	Metric Designator	Length (A)		Total Thread Length (B)[1]		Threads Per Inch[1]	Approximate Weight Per 100 Pieces		Standard Package
		in	mm	in	mm		lb	kg	
1/2	16	(Close) 1 1/8	29	0.78	19.8	14	6	2.7	25
1/2	16	1 1/2	38	0.78	19.8	14	8	3.6	25
1/2	16	2	51	0.78	19.8	14	12	5.4	25
1/2	16	2 1/2	64	0.78	19.8	14	15	6.8	25
1/2	16	3	76	0.78	19.8	14	19	8.6	25
1/2	16	3 1/2	89	0.78	19.8	14	22	10.0	25
1/2	16	4	102	0.78	19.8	14	26	11.8	25
1/2	16	5	127	0.78	19.8	14	33	15.0	25
1/2	16	6	152	0.78	19.8	14	40	18.1	25
1/2	16	8	203	0.78	19.8	14	54	24.5	25
1/2	16	10	254	0.78	19.8	14	68	30.8	25
1/2	16	12	305	0.78	19.8	14	82	37.2	25
3/4	21	(Close) 1 3/8	35	0.79	20.1	14	9	4.1	25
3/4	21	1 1/2	38	0.79	20.1	14	10	4.5	25
3/4	21	2	51	0.79	20.1	14	14	6.4	25
3/4	21	2 1/2	64	0.79	20.1	14	19	8.6	25
3/4	21	3	76	0.79	20.1	14	24	10.9	25
3/4	21	3 1/2	89	0.79	20.1	14	28	12.7	25
3/4	21	4	102	0.79	20.1	14	34	15.4	25
3/4	21	5	127	0.79	20.1	14	43	19.5	25
3/4	21	6	152	0.79	20.1	14	52	23.6	25
3/4	21	8	203	0.79	20.1	14	73	33.1	25
3/4	21	10	254	0.79	20.1	14	89	40.4	25
3/4	21	12	305	0.79	20.1	14	109	49.4	25

[1]Mimimum requirement as per UL Standard
A tolerance of minus one thread applies to Total length of Thread

Chart continued on the next page

NOTE: Special orders are non-cancelable, non-returnable and non-refundable

16100 S. Lathrop Ave., Harvey, IL 60426
Phone / 708.339.1610 • Toll-Free / 800.882.5543
www.alliedeg.com

Rigid Non-Metallic Schedule 40 Electrical Conduit

allied TUBE & CONDUIT®
A PART OF atkore INTERNATIONAL

Schedule 40 Electrical Conduit

Allied Tube & Conduit® created the long bell for ease and efficiency. In compliance with the industry standards, Allied Tube & Conduit® PVC Electrical Conduit is manufactured from PVC compounds complying with the UL651 standards. Our PVC Electrical Conduits are subject to in-process quality control to assure compliance with appropriate manufacturing and performance standards.

- UL 651
- NEMA TC-2
- Sunlight resistant per UL 651
- Listed for 90° C conductors or cable
- Rigid nonmetallic raceway for wires and cables in accordance with the NEC
- Product manufactured with one integral solvent-weld bell standard per length

10' Part No.	20' Part No.	Trade Size	Average O.D. (in)	Minimum Average I.D. (in)	Minimum Wall (in)	Weight Per Foot (lbs)	10 Ft Crate Quantity (ft)
8102	8502	½	0.840	0.578	0.109	0.165	6000
8103	8503	¾	1.050	0.780	0.113	0.220	4400
8104	8504	1	1.315	1.004	0.133	0.326	3600
8105	8505	1 ¼	1.660	1.335	0.140	0.441	3300
8106	8506	1 ½	1.900	1.564	0.145	0.528	2250
8108	8508	2	2.375	2.021	0.154	0.730	1400
8110	8510	2 ½	2.875	2.414	0.203	1.158	930
8112	8512	3	3.500	3.008	0.216	1.609	880
8114	8514	3 ½	4.000	3.486	0.226	1.935	630
8116	8516	4	4.500	3.961	0.237	2.292	570
8120	8520	5	5.563	4.975	0.258	3.105	380
8124	8524	6	6.625	5.986	0.280	4.030	260
880747	924297	8*	8.625	7.853	0.322	6.065	140

Meets or exceeds the requirements of **NEMA TC 2** and **UL 651** for Schedule 40 Conduit.
* UL 651 does not include 8"

ETL LISTED US
Intertek

Item availability may vary by region.

NOTE: Special orders are non-cancelable, non-returnable and non-refundable

16100 S. Lathrop Ave., Harvey, IL 60426
Phone / 708.339.1610 • Toll-Free / 800.882.5543
www.alliedeg.com

Electrical Metallic Tubing (EMT) and True Color™ EMT

allied TUBE & CONDUIT®

A PART OF atkore INTERNATIONAL

E-Z Pull® EMT

- Hot galvanized steel using patented inline Flo-Coat® process for long lasting exterior protection
- E-Z Pull interior coating provides a smooth raceway for fast, easier wire-pulling
- Excellent mechanical protection for conductors
- Ductility for faster and easier bending
- Optimal EMI shielding characteristics
- Listed to Underwriters Laboratories Safety Standard UL 797
- Manufactured in accordance with ANSI C80.3
- Available in sizes 1/2 (16) - 4 (103)

Quality Electrical Metallic Tubing

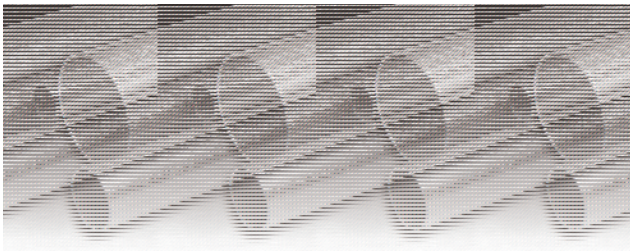

True Color™ EMT

- All the benefits of E-Z Pull EMT
- Instant identification of multiple circuits
- Fire Alarm® Red EMT
- Healthcare Green EMT
- Data Com Blue EMT
- Available in 8 colors
- Available in sizes 1/2 (16) - 4 (103)

Identify Important Circuits Instantly!

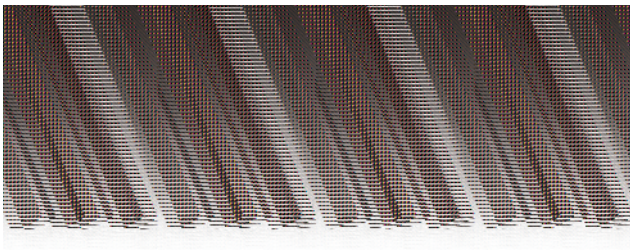

True Color™ Applications

Black EMT
- Blends in dark colored areas

Fire Alarm® EMT
- Emergency circuits
- Fire alarm and Security systems

Orange EMT
- Construction/research areas
- Fiber optic systems
- Auto repair/maintenance

Yellow EMT
- High voltage wiring
- Caution areas
- Special equipment

Green EMT
- Hospital and healthcare areas
- Nurse call stations
- Critical circuits

Blue EMT
- Low voltage wiring
- Data com/video
- Network security

Purple EMT
- Specialty wiring systems
- Security systems

White EMT
- Blends in light colored areas

Silver EMT
- Standard Use
- Contemporary architecture

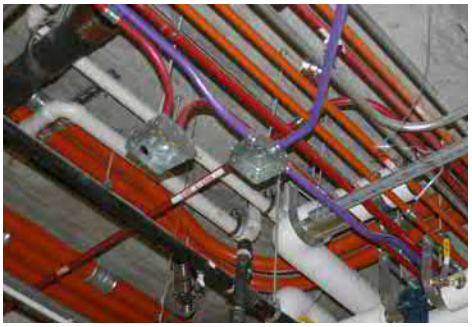

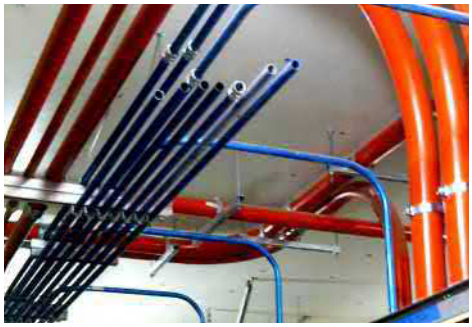

Project Information

Company Name: _____
Address: _____
City: _____
State & Zip: _____
Phone: _____
Project Name: _____
City: _____
State: _____

Electrical Metallic Tubing (EMT) and True Color™ EMT

allied TUBE & CONDUIT®
A PART OF atkore INTERNATIONAL

FEATURES & SPECIFICATIONS

Manufactured for Long Life

Allied Tube & Conduit® EMT is precision manufactured from high grade mild strip steel for exceptional durability and long-lasting life. Allied EMT is hot galvanized using a patented inline Flo-Coat® process. This process combines zinc, a conversion coating, and a clear organic polymer topcoat to form a triple layer of protection against corrosion and abrasion.

E-Z Pull® EMT combines strength with ductility, providing easy bending, cutting and joining while resisting flattening, kinking and splitting. Available in sizes 1/2 (16) - 4 (103).

Coatings

Allied's EMT (Electrical Metallic Tubing) has a special low friction ID coating called E-Z Pull that greatly improves the slip properties between conduit and wire. With E-Z Pull EMT, wire pulls through the EMT smoothly and easily, making installation easier and faster.

EMI Shielding

Allied EMT is very effective in reducing electromagnetic field levels for encased power distribution circuits, shielding computers and other sensitive electronic equipment from the effects of electromagnetic interference.
For more information on EMT shielding, visit www.alliedeg.com to obtain the **GEMI** (**G**rounding and **E**lectro-**M**agnetic **I**nterference) software analysis program.

Codes & Standards Compliance

Allied EMT is listed to Underwriters Laboratories Safety Standard UL 797 and meets ANSI C80.3. These standards have been adopted as federal specifications in lieu of WWC 563. EMT is recognized as an equipment grounding conductor by NEC Section 250-118. Documentation for compliance with NEC Article 250 is also available in the **GEMI** (**G**rounding and **E**lectro-**M**agnetic **I**nterference) analysis software and related research studies found at the www.alliedeg.com website.

Installation of EMT shall be in accordance with the National Electrical Code and the UL listing information. Allied EMT is listed in category FJMX. Master bundles conform to NEMA Standard RN2.

Specification Data

To specify Allied EMT, include the following: Electrical Metallic Tubing shall be equal to that manufactured by Allied Tube & Conduit Corporation. EMT shall be hot galvanized steel O.D. with an organic corrosion resistant I.D. coating, and shall be listed to UL Safety Standard 797 and manufactured in accordance with ANSI C80.3.

Electrical Metallic Tubing (EMT) and True Color™ EMT

Listed to Underwriters Laboratories Safety Standard UL 797
Manufactured in accordance with ANSI C80.3

Trade Size	Metric Designator	Outside Diameter[1]		Nominal Wall Thickness[2]		Approximate Weight Per 100 Ft. (30.5M)		Red and Galvanized Master Bundle Quantity		True Color** Bundle Qty.	
		in	mm	in	mm	lb	kg	ft	m	ft	m
1/2	16	0.706	17.93	0.042	1.07	30	13.6	7000	2135	3500	1066.8
3/4	21	0.922	23.42	0.049	1.24	46	20.9	5000	1525	2500	762.0
1	27	1.163	29.54	0.057	1.45	67	30.4	3000	915	1500*	457.2
1-1/4	35	1.510	38.35	0.065	1.65	101	45.8	2000	610	2000	609.6
1-1/2	41	1.740	44.20	0.065	1.65	116	52.6	1500	457.5	1500	457.2
2	53	2.197	55.80	0.065	1.65	148	67.1	1200	366.0	1200	365.7
2-1/2	63	2.875	73.03	0.072	1.83	216	98.0	610	186.1	610	185.9
3	78	3.500	88.90	0.072	1.83	263	119.3	510	155.6	510	155.4
3-1/2	91	4.000	101.60	0.083	2.11	349	158.3	370	112.9	370	112.7
4	103	4.500	114.30	0.083	2.11	393	178.3	300	91.5	300	91.5

[1]Outside diameter tolerances: +/- .005 in. (.13mm) for trade sizes 1/2 (16mm) through 2 (53mm);
+/- .010 in. (.25mm) for trade sizes 2-1/2 (63mm);
+/- .015 in. (.38mm) for trade size 3 (78mm);
+/- .020 in. (.51mm) for trade sizes 3-1/2 (91mm) and 4 (103mm).

*Blue trade size 1 master bundle size: 3000 ft / 915 m
** Other Color Trade Sizes 2 - 4 are available thru special order
NOTE: Length = 10 ft. (3.05m) with a tolerance of +/- .25 in. (6.35 mm)

NOTE: Special orders are non-cancelable, non-returnable and non-refundable

16100 S. Lathrop Ave., Harvey, IL 60426
Phone / 708.339.1610 • Toll-Free / 800.882.5543
www.alliedeg.com

Electrical Metallic Tubing (EMT) Elbows

EMT 90° Elbows

Listed to Underwriters Laboratories Safety Standard UL 797
Manufactured in accordance with ANSI C80.3

Trade Size	Metric Designator	Radius (A)[1]		Offset (B)[2]		Straight (D)[1]		Approximate Weight Per 100 Pieces		Standard Package
		in	mm	in	mm	in	mm	lb	kg	
1/2	16	4	102	5 7/8	149	1 1/2	38	25	11.3	25
3/4	21	4 1/2	114	7	178	1 1/2	38	46	20.9	50
1	27	5 3/4	146	8 3/4	222	1 7/8	48	84	38.1	25
1 1/4	35	7 1/4	184	10 1/8	257	2	51	144	65.3	20
1 1/2	41	8 1/4	210	11 3/4	298	2	51	193	87.5	15
2	53	9 1/2	241	14	356	2	51	296	134.3	10
2 1/2	63	10 1/2	267	16 1/4	413	3	76	504	228.6	1
3	78	13	330	18 3/4	476	3 1/8	79	701	318.0	1
3 1/2	91	15	381	21 1/4	540	3 1/4	83	1047	474.9	1
4	103	16	406	23 3/8	594	3 3/8	86	1310	594.2	1

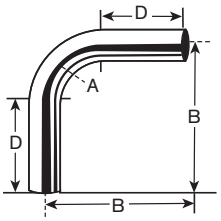

[1]Minimum requirement as per UL Standard
[2]Dimensions and weights are approximate
Sizes 2-1/2 (63) and larger shipped in palletized cartons or bulk.
Also available in the following Degrees (60°, 45°, 30°, 22-1/2°, 15° & 11-1/4°)

EMT 45° Elbows

Listed to Underwriters Laboratories Safety Standard UL 797
Manufactured in accordance with ANSI C80.3

Trade Size	Metric Designator	Radius (A)[1]		Offset (B)[2]		Offset (C)[2]		Straight (D)[1]		Approximate Weight Per 100 Pieces		Standard Package
		in	mm	in	mm	in	mm	in	mm	lb	kg	
1/2	16	4	102	6 1/8	156	2 1/2	64	1 1/2	38	18	8.2	25
3/4	21	4 1/2	114	7 3/8	187	3 1/8	79	1 1/2	38	33	15.0	50
1	27	5 3/4	146	8 3/4	222	3 5/8	92	1 7/8	48	56	25.4	25
1 1/4	35	7 1/4	184	10 1/8	257	4 1/8	105	2	51	97	44.0	20
1 1/2	41	8 1/4	210	13 1/8	333	5 3/8	137	2	51	145	65.8	15
2	53	9 1/2	241	13 1/8	333	5 1/2	140	2	51	185	83.9	10
2 1/2	63	10 1/2	267	17 1/2	445	7 1/4	184	3	76	360	163.3	1
3	78	13	330	17 1/2	445	7 1/4	184	3 1/8	79	438	198.7	1
3 1/2	91	15	381	26 1/8	664	10 7/8	276	3 1/4	83	873	396.0	1
4	103	16	406	26 1/4	667	10 7/8	276	3 3/8	86	983	445.9	1

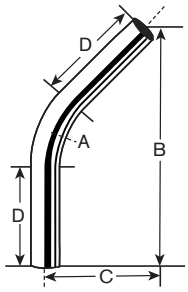

[1]Minimum requirement as per UL Standard
[2]Dimensions and weights are approximate
Sizes 2-1/2 (63) and larger shipped in palletized cartons or bulk.
Also available in the following Degrees (90°, 60°, 30°, 22-1/2°, 15° & 11-1/4°)

NOTE: Special orders are non-cancelable, non-returnable and non-refundable

16100 S. Lathrop Ave., Harvey, IL 60426
Phone / 708.339.1610 • Toll-Free / 800.882.5543
www.alliedeg.com

Electrical Metallic Tubing (EMT) Elbows

EMT Large Radius 90° Elbows

Listed to Underwriters Laboratories Safety Standard UL 797
Manufactured in accordance with ANSI C80.3

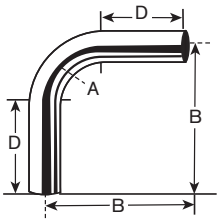

Trade Size	Metric Designator	Radius (A)		Offset (B)[2]		Straight (D)[2]		Approximate Weight Per 100 Pieces	
		in	mm	in	mm	in	mm	lb	kg
1	27	12	305	20 5/8	524	8 5/8	219	201	91.2
1	27	15	381	24 1/4	616	9 1/4	235	235	106.6
1	27	18	457	27 7/8	708	9 7/8	251	268	121.6
1	27	24	610	34 5/8	879	10 5/8	270	329	149.2
1	27	30	762	41	1041	11	279	385	174.6
1	27	36	914	46 3/4	1187	10 3/4	273	436	197.8
1	27	42	1067	54	1372	12	305	503	228.2
1	27	48	1219	60 1/4	1530	12 1/4	311	558	253.1
1 1/4	35	12	305	20 5/8	524	8 5/8	219	303	137.4
1 1/4	35	15	381	24 1/4	616	9 1/4	235	354	160.6
1 1/4	35	18	457	27 7/8	708	9 7/8	251	404	183.3
1 1/4	35	24	610	34 5/8	879	10 5/8	270	497	225.4
1 1/4	35	30	762	41	1041	11	279	581	263.5
1 1/4	35	36	914	46 3/4	1187	10 3/4	273	657	298.0
1 1/4	35	42	1067	54	1372	12	305	758	343.8
1 1/4	35	48	1219	60 1/4	1530	12 1/4	311	842	381.9
1 1/2	41	15	381	24 1/4	616	9 1/4	235	406	184.2
1 1/2	41	18	457	27 7/8	708	9 7/8	251	464	210.5
1 1/2	41	24	610	34 5/8	879	10 5/8	270	570	258.6
1 1/2	41	30	762	41	1041	11	279	667	302.6
1 1/2	41	36	914	46 3/4	1187	10 3/4	273	754	342.0
1 1/2	41	42	1067	54	1372	12	305	870	394.6
1 1/2	41	48	1219	60 1/4	1530	12 1/4	311	967	438.6
2	53	15	381	24 1/4	616	9 1/4	235	518	235.0
2	53	18	457	27 7/8	708	9 7/8	251	592	268.5
2	53	24	610	34 5/8	879	10 5/8	270	728	330.2
2	53	30	762	41	1041	11	279	851	386.0
2	53	36	914	46 3/4	1187	10 3/4	273	962	436.4
2	53	42	1067	54	1372	12	305	1110	503.5
2	53	48	1219	60 1/4	1530	12 1/4	311	1233	559.3
2 1/2	63	18	457	27 7/8	708	9 7/8	251	864	391.9
2 1/2	63	24	610	34 5/8	879	10 5/8	270	1062	481.7
2 1/2	63	30	762	41	1041	11	279	1242	563.4
2 1/2	63	36	914	46 3/4	1187	10 3/4	273	1404	636.9
2 1/2	63	42	1067	54	1372	12	305	1620	734.8
2 1/2	63	48	1219	60 1/4	1530	12 1/4	311	1800	816.5

[2]For information only, not a requirement as per UL Standard
Sizes 2-1/2 (63) and larger shipped in palletized cartons or bulk.
Also available in the following Degrees (60°, 45°, 30°, 22-1/2°, 15° & 11-1/4°)

Chart continued on the next page

NOTE: Special orders are non-cancelable, non-returnable and non-refundable

16100 S. Lathrop Ave., Harvey, IL 60426
Phone / 708.339.1610 • Toll-Free / 800.882.5543
www.alliedeg.com

Electrical Metallic Tubing (EMT) Elbows

EMT Large Radius 90° Elbows (continued)

Listed to Underwriters Laboratories Safety Standard UL 797
Manufactured in accordance with ANSI C80.3

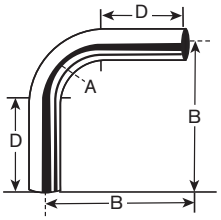

Trade Size	Metric Designator	Radius (A)		Offset (B)[2]		Straight (D) [2]		Approximate Weight Per 100 Pieces	
		in	mm	in	mm	in	mm	lb	kg
3	78	15	381	24 1/4	616	9 1/4	235	921	417.8
3	78	18	457	27 7/8	708	9 7/8	251	1052	477.2
3	78	24	610	34 5/8	879	10 5/8	270	1293	586.5
3	78	30	762	41	1041	11	279	1512	685.8
3	78	36	914	46 3/4	1187	10 3/4	273	1710	775.7
3	78	42	1067	54	1372	12	305	1973	895.0
3	78	48	1219	60 1/4	1530	12 1/4	311	2192	994.3
3 1/2	91	18	457	27 7/8	708	9 7/8	251	1396	633.2
3 1/2	91	24	610	34 5/8	879	10 5/8	270	1716	778.4
3 1/2	91	30	762	41	1041	11	279	2007	910.4
3 1/2	91	36	914	46 3/4	1187	10 3/4	273	2269	1029.2
3 1/2	91	42	1067	54	1372	12	305	2618	1187.5
3 1/2	91	48	1219	60 1/4	1530	12 1/4	311	2908	1319.1
4	103	24	610	34 5/8	879	10 5/8	270	1932	876.4
4	103	30	762	41	1041	11	279	2260	1025.1
4	103	36	914	46 3/4	1187	10 3/4	273	2555	1158.9
4	103	42	1067	54	1372	12	305	2948	1337.2
4	103	48	1219	60 1/4	1530	12 1/4	311	3275	1485.5

[2]For information only, not a requirement as per UL Standard
Sizes 2-1/2 (63) and larger shipped in palletized cartons or bulk.
Also available in the following Degrees (60°, 45°, 30°, 22-1/2°, 15° & 11-1/4°)

NOTE: Special orders are non-cancelable, non-returnable and non-refundable

16100 S. Lathrop Ave., Harvey, IL 60426
Phone / 708.339.1610 • Toll-Free / 800.882.5543
www.alliedeg.com

THIS PAGE LEFT INTENTIONALLY BLANK

Straight Blade Devices

20A, 125V, 2 Pole, 3 Wire Grounding

HBL® Extra Heavy Duty Compact, Side Wired Only, Duplex Receptacle

HUBBELL

Features

- Slender/compact design
- Brass Mounting Strap
- Triple wipe contacts

Ordering Information

Description	Device Color	UPC	Catalog Number
Side wired only	Ivory	783585434803	HBL5342I

Listings

UL Listed to UL498 File No. E2186
Certified to CSA 22.2, No. 42 File 285
Fed. Spec. WC596
NEMA® WD-6 Compliant

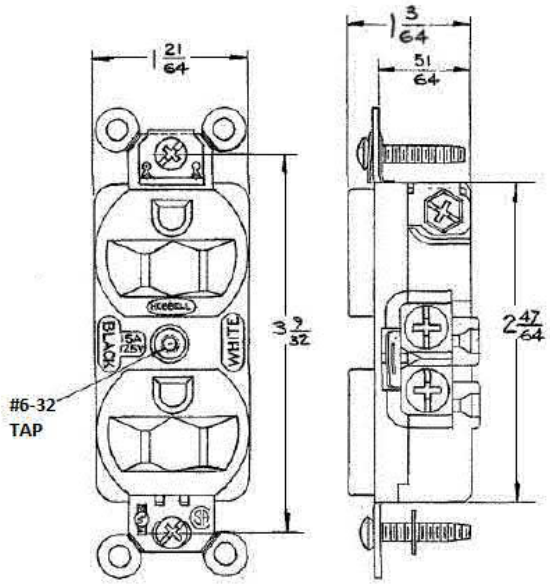

Specifications

Face	Nylon
Base	PBT
Power Contacts	.032" (.8) Brass
Ground Contact	.031 in. (.8) Brass
Terminal Screws	Brass
Mounting Strap	.050" (1.3) Brass
Automatic Self-grounding Clip	Stainless steel
Mounting Screws	Steel-Zinc Plated

Performance

Electrical

Current Interrupting	Certified for current interrupting at full rated current
Dielectric Voltage	Withstands 2,000V minimum

Mechanical

Product Identification	Ratings are a permanent part of the device
Terminal Accommodation	#12-#10 AWG stranded or solid copper wire only
Terminal Identification	Terminals identified in accordance with UL 498 and CSA

Environmental

Flammability	Top: UL 94V-2, Base: UL 94V-0
Operating Temperatures	Maximum continuous 75°C; minimum -40°C (w/o impact)

Accessories

Wallplate or Weatherproof Cover Duplex Opening

Resources

Customer Use Drawing
eCatalog

Dimensions in Inches (mm)

Hubbell Wiring Device-Kellems • Hubbell Incorporated (Delaware) • 40 Waterview Drive • Shelton, CT 06484
Phone (800) 288-6000 • Fax (800) 255-1031 • Specifications subject to change without notice.

HUBBELL Wiring Device-Kellems

Switches, Single Pole
20A, 120-277V AC
Hubbell-PRO Heavy Duty Industrial Switch

HUBBELL

Features

- Steel, zinc plated bridge is corrosion resistant
- Color Coded by Amperage makes inspection easy even when installed
- Strip gauge for accurate wiring

Ordering Information

Description	Toggle Color	UPC	Catalog Number
Toggle, back and side wired	Ivory	783585835280	1221I

Listings

UL Listed
CSA Certified
Fed. Spec. W-S-896

Specifications

Top Material	Thermoplastic, Red
Base Material	Thermoplastic, Black
Toggle Material	Nylon
Contacts	Silver Alloy
Terminal Screws	Brass
Auto Grounding Mounting Bridge	Zinc Plated Steel
Ground Screw	Brass (Green)

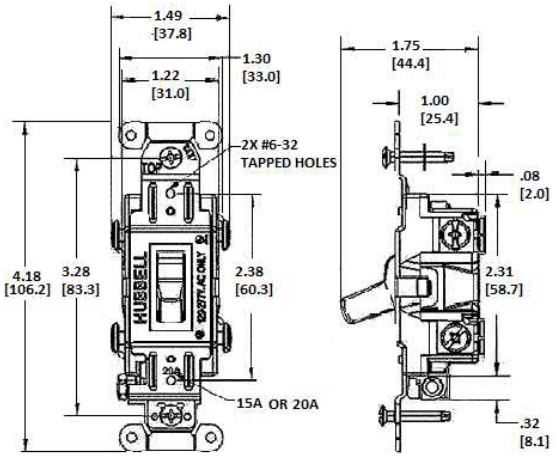

Performance

Electrical

Dielectric Voltage	Withstands 1500V AC minimum for 1 minute
Max. Continuous Current	20A
Max. Working Voltage	277V AC
Overload	Minimum 4.8 times rated current for 100 cycles
Temperature Rise	30°C maximum at rated current

Mechanical

Terminal Accommodations	#14 AWG min. - #10 AWG max. solid and stranded copper wire only

Environmental

Flammability	UL 94V-2
Operating Temperature	Max. continuous: 75°C; Min. continuous: -40°C without impact

Online Resources

Customer Use Drawing
eCatalog
Installation Instructions

Dimensions in Inches (mm)

Hubbell Wiring Device-Kellems • Hubbell Incorporated (Delaware) • 40 Waterview Drive • Shelton, CT 06484
Phone (800) 288-6000 • Fax (800) 255-1031 • Specifications subject to change without notice.

HUBBELL Wiring Device-Kellems

SystemOne Recessed 2-Gang Floor Boxes and Covers, for Use In Concrete Floors

Style	Rectangular Cover		Round Cover	
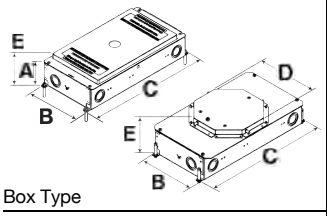 Box Type				
Standard Corrosion-Resistant (On-grade)	**CFB2G30** **CFB2G30CR**	**CFB2G25** **CFB2G25CR**	**CFB2G30R** **CFB2G30RCR**	**CFB2G25R** **CFB2G25RCR**
Recommended Pour Depth	3.50" (88.9)	3.00" (76.2)	3.75" (95.3)	3.25" (82.6)
Min. Depth of Pour	3.00" (76.2)	2.50" (63.5)	3.75" (95.3)	3.25" (82.6)
Adjustability	Fully	Fully	Fully	Fully
Cubic Inch (cm^3) Capacity per Gang	35.0 cu. in. (573.6 cm^3)	30.0 cu. in. (491.7 cm^3)	35.0 cu. in. (573.6 cm^3)	30.0 cu. in. (491.7 cm^3)
Dimensions – A	3.00" (76.2)	2.50" (63.5)	–	–
Dimensions – B	6.62" (168.1)	6.62" (168.1)	7.32" (185.9)	7.32" (185.9)
Dimensions – C	13.80" (350.3)	13.80" (350.3)	13.80" (350.3)	13.80" (350.3)
Dimensions – D	–	–	6.37" (161.7) TYP.	6.37" (161.7) TYP.
Dimensions – E	3.50" (88.9)	3.00" (76.2)	3.75" (95.3)	3.25" (82.6)
KO Trade Size: Ends Sides Bottom	(4) ¾", 1", 1¼", 2"* (4) ½", ¾", 1", 1¼" (4) ½", ¾", 1", 1¼"	(4) ½", ¾", 1" (4) ½", ¾", 1" (4) ½", ¾", (4) 1", 1¼"	(2) ½", ¾", (2) ¾", 1", 1¼", 2"* (4) ½", ¾", 1", 1¼" (4) ½", ¾", 1", 1¼"	(2) ½", ¾", 1" (4) ½", ¾", 1" (2) ½", ¾", (2) 1", 1¼"
Cover Family	Rectangular	Rectangular	Round	Round
Concrete Cover Included	✓	✓	✓	✓
2 Inch Hub Compatible	✓	–	✓	–

Note: UL File Number E31999.
**Requires CFBHUB2 for 2" conduits.*

Rectangular Covers

- Compatible with **CFB2G25**, **CFB2G25CR**, **CFB2G30** and **CFB2G30CR**
- Two large cable egress doors and access 180° opening
- Maximum static load of 800 lbs. with 2x safety factor*
- Surface style typical applications: Carpet, VCT
- Flush style typical applications: Tile, finished concrete and Terrazzo floors

	Surface Cover Dimensions 11 11/16 in. x 7 3/16 in.			Flush Cover Dimensions 10 11/16 in. x 6 3/16 in.		
Finish	Without Insert	With Insert	Furniture Feed (1 in. and 2 in. Plugs)	Without Insert	With Insert	Furniture Feed (1 in. and 2 in. Plugs)
Aluminum Powder Coat	**24GCCVRALU**	**24GCCVRALUC**	**24GCFFCVRALU**	**24GTCVRALU**	**24GTCVRALUC**	**24GTFFCVRALU**
Black Powder Coat	**24GCCVRBK**	**24GCCVRBKC**	**24GCFFCVRBK**	**24GTCVRBK**	**24GTCVRBKC**	**24GTFFCVRBK**
Brass Powder Coat	**24GCCVRBRS**	**24GCCVRBRSC**	**24GCFFCVRBRS**	**24GTCVRBRS**	**24GTCVRBRSC**	**24GTFFCVRBRS**
Bronze Powder Coat	**24GCCVRBRZ**	**24GCCVRBRZC**	**24GCFFCVRBRZ**	**24GTCVRBRZ**	**24GTCVRBRZC**	**24GTFFCVRBRZ**
Satin Nickel Powder Coat	**24GCCVRNK**	**24GCCVRNKC**	**24GCFFCVRNK**	**24GTCVRNK**	**24GTCVRNKC**	**24GTFFCVRNK**

6 Inch Round Covers

- Compatible with **CFB2G25R**, **CFB2G25RCR**, **CFB2G30R** and **CFB2G30RCR**
- Cover has a 7½ in. outer diameter and two large cable egress doors and access 180° opening
- Maximum static load of 1,000 lbs. with 2x safety factor*

Finish	Flush Surface	Furniture Feed (¾ in. and 2 in. Plugs)
Brushed Aluminum	**CFBS1R6CVRALU**	**CFBS1R6FFCVRALU**
Black Powder Coat	**CFBS1R6CVRBLK**	**CFBS1R6FFCVRBLK**
Brass Plated	**CFBS1R6CVRBRS**	**CFBS1R6FFCVRBRS**
Bronze Plated	**CFBS1R6CVRBRZ**	**CFBS1R6FFCVRBRZ**
Gray Powder Coat	**CFBS1R6CVRGRY**	**CFBS1R6FFCVRGRY**
Satin Nickel Plated	**CFBS1R6CVRNKL**	**CFBS1R6FFCVRNKL**

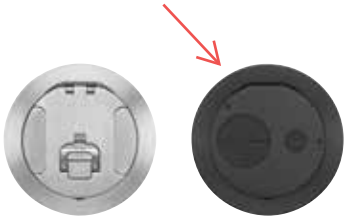

*Note: *Load applied through a 3 in. (76mm) mandrel in center of the cover.*

Dimensions in Inches (mm)

SystemOne Recessed 4-Gang Floor Boxes and Covers, for Use In Concrete Floors

Style	Rectangular Cover		Round Cover		Cast Iron	
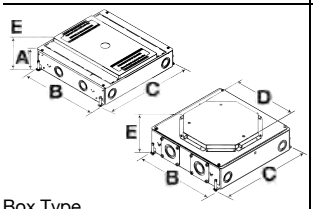						
Box Type						
Standard	**CFB4G30**	**CFB4G25**	**CFB4G30R**	**CFB4G25R**	–	–
Corrosion-Resistant (On-grade)	**CFB4G30CR**	**CFB4G25CR**	**CFB4G30RCR**	**CFB4G25RCR**	–	–
Cast Iron	–	–	–	–	**CFB4G30CI**	**CFB4G30RCI**
Recommended Pour Depth	3.50" (88.9)	3.00" (76.2)	3.75" (95.3)	3.25" (82.6)	3.75" (95.3)	4.00" (101.6)
Min. Depth of Pour	3.00" (76.2)	2.50" (63.5)	3.75" (95.3)	3.25" (82.6)	3.25" (82.6)	4.00" (101.6)
Adjustability	Fully	Fully	Fully	Fully	Fully	Fully
Cubic Inch (cm^3) Capacity per Gang	32.5 cu. in. (532.6 cm^3)	26.5 cu. in. (434.3 cm^3)	32.5 cu. in. (532.6 cm^3)	26.5 cu. in. (434.3 cm^3)	30.0 cu. in. (491.7 cm^3)	30.0 cu. in. (491.7 cm^3)
Dimensions – A	3.00" (76.2)	2.50" (63.5)	–	–	3.20" (81.3)	–
Dimensions – B	11.20" (284.5)	11.20" (284.5)	11.20" (284.5)	11.20" (284.5)	11.44" (290.5)	11.44" (290.5)
Dimensions – C	12.09" (307.1)	12.09" (307.1)	12.09" (307.1)	12.09" (307.1)	13.19" (335.1)	13.19" (335.1)
Dimensions – D	–	–	8.37" (212.5) TYP.	8.37" (212.5) TYP.	–	8.37" (212.5) TYP.
Dimensions – E	3.50" (88.9)	3.00" (76.2)	3.75" (95.3)	3.25" (82.6)	3.70" (94.0)	4.00" (101.6)
KO Trade Size: Ends	(4) ¾", 1", 1¼", 2"*	(4) ½", ¾", 1"	(4) ¾", 1", 1¼", 2"*	(4) ½", ¾", 1"	(4) 1½" NPT Thread	(4) 1½" NPT Thread
Sides	(4) ½", ¾", 1", 1¼"	(4) ½", ¾", 1"	(4) ½", ¾", 1", 1¼"	(4) ½", ¾", 1"	(4) ¾" NPT Thread	(4) ¾" NPT Thread
Bottom	(4) ½", ¾", 1", 1¼"	(4) ½", ¾", (4) 1", 1¼"	(4) ½", ¾", 1", 1¼"	(4) ½", ¾", (4) 1", 1¼"		
Cover Family	Rectangular	Rectangular	Round	Round	Rectangular	Round
Concrete Cover Included	✓	✓	✓	✓	✓	✓
2 Inch Hub Compatible	✓	–	✓	–	–	–

Note: UL File Number E31999.
**Requires CFBHUB2 for 2" conduits.*

Rectangular Covers

- Compatible with **CFB4G25**, **CFB4G25CR**, **CFB4G30** and **CFB4G30CR**
- Two large cable egress doors and access 180° opening
- Maximum static load of 800 lbs. with 2x safety factor*
- Surface style typical applications: Carpet, VCT
- Flush style typical applications: Tile, finished concrete and Terrazzo floors

	Surface Cover dimensions 11 11/16 in. x 7 3/16 in.			Flush Cover dimensions 10 11/16 in. x 6 3/16 in.		
Finish	Without Insert	With Insert	Furniture Feed (1 in. and 2 in. Plugs)	Without Insert	With Insert	Furniture Feed (1 in. and 2 in. Plugs)
Aluminum Powder Coat	**24GCCVRALU**	**24GCCVRALUC**	**24GCFFCVRALU**	**24GTCVRALU**	**24GTCVRALUC**	**24GTFFCVRALU**
Black Powder Coat	**24GCCVRBK**	**24GCCVRBKC**	**24GCFFCVRBK**	**24GTCVRBK**	**24GTCVRBKC**	**24GTFFCVRBK**
Brass Powder Coat	**24GCCVRBRS**	**24GCCVRBRSC**	**24GCFFCVRBRS**	**24GTCVRBRS**	**24GTCVRBRSC**	**24GTFFCVRBRS**
Bronze Powder Coat	**24GCCVRBRZ**	**24GCCVRBRZC**	**24GCFFCVRBRZ**	**24GTCVRBRZ**	**24GTCVRBRZC**	**24GTFFCVRBRZ**
Satin Nickel Powder Coat	**24GCCVRNK**	**24GCCVRNKC**	**24GCFFCVRNK**	**24GTCVRNK**	**24GTCVRNKC**	**24GTFFCVRNK**

8 Inch Round Covers

- Compatible with **CFB4G25R**, **CFB4G25RCR**, **CFB4G30R**, **CFB4G30RCR** and **CFB4G30RCI**
- Cover has a 9½ in. outer diameter and two large cable egress doors and access 180° opening
- Maximum static load of 1,000 lbs. with 2x safety factor*

Finish	Flush Surface
Brushed Aluminum	**CFBS1R8CVRALU**
Black Powder Coat	**CFBS1R8CVRBLK**
Brass Plated	**CFBS1R8CVRBRS**
Bronze Plated	**CFBS1R8CVRBRZ**
Gray Powder Coat	**CFBS1R8CVRGRY**
Satin Nickel Plated	**CFBS1R8CVRNKL**

*Note: *Load applied through a 3 in. (76mm) mandrel in center of the cover.*

Dimensions in Inches (mm)

SystemOne Recessed 8*/10-Gang Floor Boxes and Covers, for Use In Concrete Floors

Style	Rectangular Cover		Round Cover	
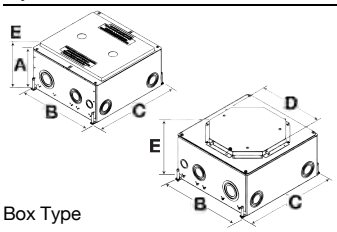 Box Type				
Standard Corrosion-Resistant (On-grade)	**CFB10G55** **–**	**–** **CFB10G55CR**	**CFB10G55R** **–**	**–** **CFB10G55RCR**
Recommended Pour Depth	6.09" (154.2)	6.09" (154.2)	6.31" (160.2)	6.31" (160.2)
Min. Depth of Pour	5.59" (142.0)	5.59" (142.0)	6.31" (160.2)	6.31" (160.2)
Adjustability	Fully	Fully	Fully	Fully
Cubic Inch (cm^3) Capacity per Gang	25/50/71 cu. in. (409.7/819.4/1163.5 cm^3)	25/50/71 cu. in. (409.7/819.4/1163.5 cm^3)	25/50/71 cu. in. (409.7/819.4/1163.5 cm^3)	25/50/71 cu. in. (409.7/819.4/1163.5 cm^3)
Dimensions – A	5.59" (142.0)	5.59" (142.0)	–	–
Dimensions – B	10.96" (278.4)	10.96" (278.4)	10.96" (278.4)	10.96" (278.4)
Dimensions – C	12.09" (307.0)	12.09" (307.0)	12.09" (307.0)	12.09" (307.0)
Dimensions – D	–	–	8.37" (212.5) TYP.	8.37" (212.5) TYP.
Dimensions – E	6.09" (154.7)	6.09" (154.7)	6.31" (160.2)	6.31" (160.2)
KO Trade Size: Ends Sides Bottom	(2) ½", ¾", (2) ¾", 1", 1¼", 1½", (2) 1", 1¼", 1½", 2" (4) ¾", 1", 1¼", 1½" (2) ½", ¾", (4) ½", ¾", 1", 1¼"	(2) ½", ¾", (2) ¾", 1", 1¼", 1½", (2) 1", 1¼", 1½", 2" (4) ¾", 1", 1¼", 1½" (2) ½", ¾", (4) ½", ¾", 1", 1¼"	(1) ½", ¾", (1) ¾", 1", 1¼", 1½", (2) 1", 1¼", 1½", 2" (4) ¾", 1", 1¼", 1½" (2) ½", ¾", (4) ½", ¾", 1", 1¼"	(1) ½", ¾", (1) ¾", 1", 1¼", 1½", (2) 1", 1¼", 1½", 2" (4) ¾", 1", 1¼", 1½" (2) ½", ¾", (4) ½", ¾", 1", 1¼"
Cover Family	Rectangular	Rectangular	Round	Round
Concrete Cover Included	✓	✓	✓	✓
2 Inch Hub Compatible	–	–	–	–

Note: UL File Number E31999.
**Use with FB10MPNEMA2XG and/or FB10MPNEMA4G for 8-gang configuration.*

Rectangular Covers

- Compatible with **CFB10G55** and **CFB10G55CR**
- Two large cable egress doors and access 180° opening
- Maximum static load of 1,500 lbs. with 2x safety factor*
- Surface style typical applications: Carpet, VCT
- Flush style typical applications: Tile, finished concrete and Terrazzo floors

	Surface Cover Dimensions 11½ in. x 10 in.		Flush Cover Dimensions 10½ in. x 9 in.	
Finish	Without Insert	With Insert	Without Insert	With Insert
Aluminum Powder Coat	**610GCCVRALU**	**610GCCVRALUC**	**610GTCVRALU**	**610GTCVRALUC**
Black Powder Coat	**610GCCVRBK**	**610GCCVRBKC**	**610GTCVRBK**	**610GTCVRBKC**
Brass Powder Coat	**610GCCVRBRS**	**610GCCVRBRSC**	**610GTCVRBRS**	**610GTCVRBRSC**
Bronze Powder Coat	**610GCCVRBRZ**	**610GCCVRBRZC**	**610GTCVRBRZ**	**610GTCVRBRZC**
Satin Nickel Powder Coat	**610GCCVRNK**	**610GCCVRNKC**	**610GTCVRNK**	**610GTCVRNKC**

8 Inch Round Covers

- Compatible with **CFB10G55R** and **CFB10G55RCR**
- Two large cable egress doors and access 180° opening
- Maximum static load of 1,000 lbs. with 2x safety factor*

Finish	Flush Surface
Brushed Aluminum	**CFBS1R8CVRALU**
Black Powder Coat	**CFBS1R8CVRBLK**
Brass Plated	**CFBS1R8CVRBRS**
Bronze Plated	**CFBS1R8CVRBRZ**
Gray Powder Coat	**CFBS1R8CVRGRY**
Satin Nickel Plated	**CFBS1R8CVRNKL**

*Note: *Load applied through a 3 in. (76mm) mandrel in center of the cover.*

Dimensions in Inches (mm)

ScrubShield® Complies with UL514A

How to Order 10, 8, 6 and 4 Inch SystemOne Products

STEP 1: Select Recessed Access Poke-Through

10 Inch

8 Inch

6 Inch

4 Inch

Or Select Furniture Feed Poke-Through

10 Inch

6 Inch

4 Inch

STEP 2: Select Recessed Access Sub-Plate

10 Inch

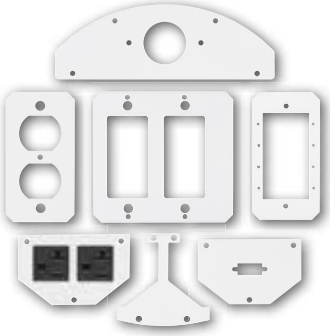

Center Sub-Plates
with Perimeter Sub-plates

8 Inch

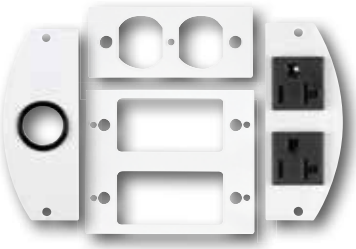

Center Sub-Plates
with Perimeter Sub-plates

6 Inch

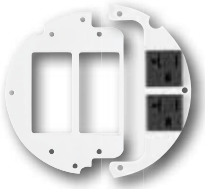

60/40 Split
Sub-Plates

4 Inch

Quad
Sub-Plates

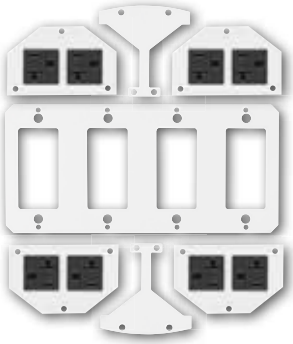

Open Data/AV Center Sub-Plate with
Perimeter Power Sub-Plates

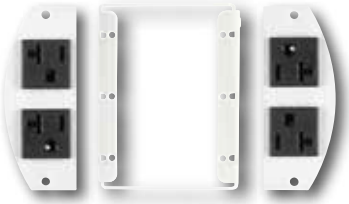

3-Gang Data/AV Center Extension with
Perimeter Power Sub-Plates

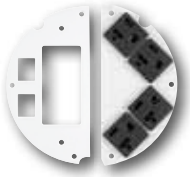

50/50 Split
Sub-Plates

2X2
Sub-Plates

Note: Furniture feed version does not require sub-plates.

How to Order 10, 8, 6 and 4 Inch SystemOne Products

STEP 3: Select Recessed Cover (Aluminum cover shown, see below for all available finishes)

10 Inch → **8 Inch** **6 Inch** **4 Inch**

Note: Tamper-Resistant 10 inch covers are also available.

Or Select Furniture Feed Cover (Aluminum cover shown, see below for all available finishes)

10 Inch → **6 Inch** **4 Inch**

Available Cover Finishes

→ Brushed Aluminum | Brushed Brass Plated | Antique Bronze Plated | Black Powder Coat | Gray Powder Coat | Satin Nickel Plated

Recommended Fire-Rated Poke-Through Size Chart

To avoid over or under utilizing the capacity of the fire-rated poke-through, first determine how many gangs of power, data and AV are required for the application. The matrix below will guide you to the correct poke-through size.

POWER GANGS	Recommended Fire-Rated Poke-Through Size					
5	8"	10"	10"	10"		
4	8"	8"	10"	10"	10"	
3	6"	8"	8"	10"	10"	10"
2	6"	6"	8"	8"	10"	10"
1	4"	6"	6"	8"	8"	10"
0	—	4"	6"	8"	8"	8"
	0	1	2	3	4	5
	DATA AND AV GANGS					

Exceeds capacity of Hubbell recessed poke-throughs

Example: 2-gangs of power, 1-gang of AV and 1-gang of data is required. Find the intersection for 2 power gangs with 2 data/AV gangs. The highlighted intersection defines the recommended FRPT.

Section 3

Safety Switches

Light Duty

General Duty

Heavy Duty

Stainless Steel Heavy Duty

EZ Selector - Selection Assistance 3-2

Safety Switches EZ Selector - Selection Assistance 3-2
Safety Switches EZ Selector - Selection Assistance 3-2

Light Duty Safety Switches 3-3

Light Duty—Visible Blades 10 kA Short Circuit Current Rating 3-3

General Duty Safety Switches 3-4

General Duty—Up to 100 kA Short Circuit Current Rating 3-4
240 Volt—Single Throw Fusible Switches 3-4
240 Volt—Single Throw Non-Fusible Switches 3-5
UL Listed Maximum Short Circuit Current Ratings — AC Only 3-5
Accessories and Lug Data 3-6
Field-Installed Fuse Puller Kits 3-6
Field-Installed Electrical Interlock Kits 3-6
Equipment Grounding Kits 3-6
Field-Installed Lug Kit 400 A – 600 A 3-6
Terminal Lug Data 3-6
Dimensions for General Duty Safety Switches 3-7

Heavy Duty Safety Switches 3-8

240 Volt—Single Throw Fusible Switches 3-8
600 Volt—Single Throw Fusible Switches 3-9
600 Volt—Single Throw Non-Fusible Switches 3-10
UL Listed Maximum Short Circuit Current Ratings—AC only 3-11
Special Applications 3-12
Receptacle Switches 3-14
Accessories and Special Features 3-15
Dimensions for Heavy Duty Safety Switches 3-22
NEMA Type 1 and 3R 3-22
NEMA Type 4, 4X, 5, 7, 9, and 12 3-23

Double Throw Safety Switches 3-25

Fusible and Non-Fusible Overview 3-25
240 Volt — Double Throw Safety Switches 3-26
600 Volt — Double Throw Safety Switches 3-27
Accessories and Lug Data 3-28
Application Data 3-30
Terminal Lug Data 3-31
Dimensions for Double Throw Safety Switches 3-32
Series F Devices 30–100 A 3-32
Series A, E, and T4 Devices 3-33

Photovoltaic Disconnect Switches 3-34

1000 Vdc Photovoltaic Heavy Duty Disconnect Switch 3-34

© 2019 Schneider Electric
All Rights Reserved

NEMA Type 1 | NEMA Type 3R | NEMA Type 4, 4X, 5 Stainless Steel | NEMA Type 12

Heavy Duty Safety Switches

Visible blade heavy duty safety switches are designed for application where maximum performance and continuity of service are required. All heavy duty safety switches feature quick-make, quick-break operating mechanism, a dual cover interlock and a color coded indicator handle. They are suitable for use as service equipment when equipped with a field- or factory-installed neutral assembly or equipment grounding kit, unless a 600Y/347 V or 480 Y/277 V, 1000 A or greater, solidly grounded WYE system is used, per NEC 230-95. Heavy duty safety switches are UL Listed (except as noted). Files E2875 and E154828 meet or exceed the NEMA Standard KS1. For UL Listed short circuit current ratings, see UL Listed Maximum Short Circuit Current Ratings-AC only, page 3-11.

Table 3.13: 240 Volt—Single Throw Fusible

System	Amperes	NEMA Type 1 Indoor	NEMA Type 3R Rainproof (Bolt-on Hubs [1])	NEMA Type 4, 4X, 5, [2] 304 Stainless Steel [3]) Dust tight, Watertight, Corrosion Resistant (Watertight Hubs [1])	NEMA Type 12K With Knockouts (Watertight Hubs [1])	NEMA Type 3R, 5 or 12 [4] Without Knockouts (Watertight Hubs [1])	Horsepower Ratings 240 Vac Std. (Using Fast Acting, One Time Fuses)		Max. (Using Dual Element, Time Delay Fuses)		250 Vdc [5]
		Cat. No.	Cat. No.	Cat. No.	Cat. No.	Cat. No.	1Ø	3Ø	1Ø	3Ø	
2-Wire (2 Blades and Fuseholders)—240 Vac, 250 Vdc											
	30	Use three-wire devices For two-wire applications		H221DS	H221A	H221AWK	1-1/2	3 [6]	3	7-1/2 [6]	5
	30			—	—	H2212AWK [7]	1-1/2	—	3	—	5
	60			H222DS	—	H222AWK	3	7-1/2 [6]	10	15 [6]	10
	100			H223DS	H223A	H223AWK	7-1/2	15 [6]	15	30 [8]	20
	200			H224DS	H224A	H224AWK	15	25 [6]	—	60 [6]	40
	400	H225	H225R	H225DS	—	H225AWK	—	—	—	—	50
	600	H226	H226R	H226DS	—	H226AWK	—	75 [6]	—	200 [6]	50
	800	H227	H227R	—	—	H227AWK	50	—	—	—	50
	1200	H228	H228R	—	—	H228AWK	50	—	—	—	50
3-Wire (2 Blades and Fuseholders, 1 Neutral)—240 Vac, 250 Vdc											
	30	H221N	H221NRB	Use two-wire devices, See Field-Installed Neutral Assemblies, page 3-17			1-1/2	3 [6]	3	7-1/2 [8]	5
	60	H222N	H222NRB				3	7-1/2 [6]	10	15 [6]	10
	100	H223N	H223NRB				7-1/2	15 [6]	15	30 [6]	20
	200	H224N	H224NRB				15	25 [6]	—	60 [6]	40
	400	H225N	H225NR	H225NDS	—	H225NAWK	—	50 [6]	—	125 [6]	50
	600	H226N	H226NR	H226NDS	—	H226NAWK	—	75 [6]	—	200 [6]	50
	800	H227N	H227NR [9]	—	—	H227NAWK	50	—	—	—	50
	1200	H228N	H228NR [9]	—	—	H228NAWK	50	—	—	—	50
3-Wire (3 Blades and Fuseholders)—240 Vac, 250 Vdc											
	30	Use four-wire devices For three-wire applications		H321DS	H321A	H321AWK	1-1/2	3	3	7-1/2	5
	60			H322DS	H322A	H322AWK	3	7-1/2	10	15	10
	100			H323DS	H323A	H323AWK	7-1/2	15	15	30	20
	200			H324DS	H324A	H324AWK	15	25	—	60	40
	400	H325	H325R	H325DS	—	H325AWK	—	50	—	125	50
	600	H326	H326R	H326DS	—	H326AWK	—	75	—	200	50
	800	H327	H327R [9]	—	—	H327AWK	50	100	—	250	50
	1200	H328	H328R [9]	—	—	H328AWK	50	100	—	250	50
4-Wire (3 Blades and Fuseholders, 1 Neutral)—240 Vac, 250 Vdc											
	30	H321N	H321NRB	Use three-wire devices, See Field-Installed Neutral Assemblies, page 3-17			1-1/2	3	3	7-1/2	5
	60	H322N	H322NRB				3	7-1/2	10	15	10
	100	H323N	H323NRB				7-1/2	15	15	30	20
	200	H324N	H324NRB				15	25	—	60	40
	400	H325N	H325NR	H325NDS	—	H325NAWK	—	50	—	125	50
	600	H326N	H326NR	H326NDS	—	H326NAWK	—	75	—	200	50
	800	H327N	H327NR [9]	—	—	H327NAWK	50	100	—	250	50
	1200	H328N	H328NR [9]	—	—	H328NAWK	50	100	—	250	50
4-Wire (4 Blades and Fuseholders)											
	30	Use 600 Vac devices. See 600 Volt—Single Throw Fusible Switches, page 3-9.									
	60										
	100										
	200										
	400										
	600										

Accessories: see page 3-15
Dimensions: NEMA Type 1 and 3R, see page 3-22
Dimensions: NEMA Type 4, 4X and 5 Stainless and NEMA Type 12, see page 3-23

[1] For Rainproof Bolt-On Hubs and Watertight Hubs see Hubs, page 3-15.
[2] Complete rating is NEMA Type 3, 3R, 4, 4X, 5 and 12. For NEMA Type 3R applications, remove drain screw from bottom endwall.
[3] See 316 Grade Stainless Steel—NEMA Type 3, 3R, 4, 4X, 5, 12, page 3-12.
[4] Also suitable for NEMA Type 3R application by removing drain screw from bottom endwall.
[5] For switching dc, use two outside switching poles.
[6] For corner grounded delta systems, use switching poles for ungrounded conductors. See data bulletin 2700DB0202 for additional information.
[7] 60 ampere switch with 30 ampere fuse spacing and clips. Must use 60 A enclosure accessories including electrical interlocks.
[8] For corner grounded delta systems, use switching poles for ungrounded conductors.
[9] Suitable for NEMA Type 5 applications with drain screw installed.

© 2019 Schneider Electric
All Rights Reserved
9/13/2019

600 Volt—Single Throw Fusible

Table 3.14: 600 Volt—Single Throw Fusible

System	Amperes	NEMA Type 1 Indoor	NEMA Type 3R Rainproof (Bolt-on Hubs [10])	NEMA Type 4, 4X, 5 [11] 304 Stainless Steel (316 stainless [12]) Dust tight, Watertight, Corrosion Resistant (Watertight Hubs [10])	NEMA Type 12K With Knockouts (Watertight Hubs [10])	NEMA Type 3R, 5 or 12 [13] Without Knockouts (Watertight Hubs [10])	Horsepower Ratings 480 Vac Std. (Using Fast Acting, One Time Fuses)	480 Vac Max. (Using Dual Element, Time Delay Fuses)	600 Vac Std. (Using Fast Acting, One Time Fuses)	600 Vac Max. (Using Dual Element, Time Delay Fuses)	dc [14]	
		Cat. No.	Cat. No.	Cat. No.	Cat. No.	Cat. No.	3Ø	3Ø	3Ø	3Ø	250	600
2-Wire (2 Blades and Fuseholders)—600 Vac, 600 Vdc												
	30	Use three-wire devices for two-wire applications					—	—	—	—	—	—
	60						—	—	—	—	—	—
	100						—	—	—	—	—	—
	200						—	—	—	—	—	—
	400	H265	H265R	H265DS	—	H265AWK	100 [15]	250 [15]	—	—	50	50
	600	H266	H266R	H266DS	—	H266AWK	150 [15]	400 [15]	—	—	50	50
	800	H267	H267R [16]	—	—	H267AWK	—	—	—	—	—	50
	1200	H268	H268R [16]	—	—	H268AWK	—	—	—	—	—	50
3-Wire (3 Blades and Fuseholders)—600 Vac, 600 Vdc												
	30	H361	H361RB	H361DS	H361A	H361AWK	5	15	7-1/2	20	5	15
	30	H3612 [17]	H3612RB [17]	—	H3612A [17]	H3612AWK [17]	5	15	7-1/2	20	—	15
	60	H362	H362RB	H362DS	H362A	H362AWK	15	30	15	50	—	30
	100	H363	H363RB	H363DS	H363A	H363AWK	25	60	30	100	—	50
	200	H364	H364RB	H364DS	H364A	H364AWK	50	125	60	150	40	50
	400	H365	H365R	H365DS	—	H365AWK	100	250	125	350	50	50
	600	H366	H366R	H366DS	—	H366AWK	150	400	200	500	50	50
	800	H367	H367R [16]	—	—	H367AWK	200	500	250	500	—	50
	1200	H368	H368R [16]	—	—	H368AWK	200	500	250	500	—	50
4-Wire (3 Blades and Fuseholders, 1 Neutral)—600 Vac, 600 Vdc												
	30	H361N	H361NRB	Use three-wire devices, See Field-Installed Neutral Assemblies, page 3-17			5	15	7-1/2	20	—	15
	60	H362N	H362NRB				15	30	15	50	—	30
	100	H363N	H363NRB				25	60	30	75	—	50
	200	H364N	H364NRB	H364NDS	H364NA	H364NAWK	50	125	60	150	40	50
	400	H365N	H365NR	H365NDS	—	H365NAWK	100	250	125	350	50	50
	600	H366N	H366NR	H366NDS	—	H366NAWK	150	400	200	500	50	50
	800	H367N	H367NR [16]	—	—	H367NAWK	200	500	250	500	—	50
	1200	H368N	H368NR [16]	—	—	H368NAWK	200	500	250	500	—	50
4-Wire (4 Blades and Fuseholders)—600 Vac, 600 Vdc [18]							2Ø	2Ø	2Ø	2Ø		
	30	H461	—	H461DS	—	H461AWK	7-1/2	20	10	25	5	15
	60	H462	—	H462DS	—	H462AWK	15	40	20	50	10	30
	100	H463	—	H463DS	—	H463AWK	25	60	30	75	20	30
	200	H464	—	H464DS	—	H464AWK	50	125	60	150	40	50
	400	H465	—	—	—	H465AWK	**100**	**250**	**125**	**350**	**50**	**50**
	600	H466	—	—	—	—	**150**	**400**	**200**	**500**	**50**	**50**
6-Wire (6 Blades and Fuseholders)—600 Vac [18]							3Ø	3Ø	3Ø	3Ø		
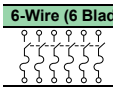	100	—	—	H663DS	—	H663AWK	25	60	30	75	—	—
	200	—	—	H664DS	—	H664AWK	For applications requiring motor disconnect capability, see Electrical Interlock Kits, page 3-16					

Accessories: see page 3-15
Dimensions: NEMA Type 1 and 3R, see page 3-22
Dimensions: NEMA Type 4, 4X and 5 Stainless and NEMA Type 12, see page 3-23

Class H, R, J, and L Fuse Provisions:

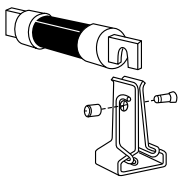
Class R Fuse

Class H or K Fuse Provisions: Fusible Square D 30–600 A heavy duty safety switches accept Class H or K fuses as standard. With Class H or K fuses installed, the switch is UL Listed for use on systems with up to 10 kA available fault current.
Class R Fuse Provisions: Fusible Square D 30–600 A heavy duty safety switches will accept Class R fuses as standard. A field-installed rejection kit is available which, when installed, rejects all but Class R fuses. With the installation of the rejection kit and Class R fuses, the switch is UL Listed for use on systems with up to 200 kA available fault current. See Class R Fuse Kits, page 3-16.
Class J Fuse Provisions: Provisions for installing Class J fuses are included in 30–400 A 600 Volt, and 100–400 A 240 Volt, fusible heavy duty safety switches. Conversion to Class J fuse spacing requires relocating the load side fuse base assembly from the standard Class H fuse location to an alternate position as marked in the enclosure. With Class J fuses installed, the switch is UL Listed for use on systems with up to 200 kA available fault current. Switches rated 600 A, 240 or 600 Volt, require the addition of an adapter kit, H600J. One kit per three-pole switch.
Class L Fuse Provisions: Fusible 800 A and 1200 A safety switches use Class L bolt-in fuses and are rated for use on systems with up to 200 kA at 600 Vac maximum. 1200 A switches accept class L fuses from 601–1200 A, 800 A switches accept class L fuses from 601–800 A.

[10] For Rainproof Bolt-On Hubs and Watertight Hubs see Hubs, page 3-15.
[11] Complete rating is NEMA Type 3, 3R, 4, 4X, 5 and 12..
[12] See Table 3.18 316 Grade Stainless Steel 3 Pole 600 Vac, 600 Vdc, page 3-12.
[13] Also suitable for NEMA Type 3R application by removing drain screw from bottom endwall.
[14] For switching dc, use two outside switching poles.
[15] For corner grounded delta systems, use switching poles for ungrounded conductors. See data bulletin 2700DB0202 for additional information.
[16] Suitable for NEMA Type 5 applications with drain screw installed.
[17] 60 A switch with 30 A fuse spacing and clips. Must use 60 A enclosure accessories including electrical interlocks.
[18] Not suitable for use as service equipment.

© 2019 Schneider Electric
All Rights Reserved
9/13/2019

600 Volt—Single Throw Non-Fusible

Table 3.15: 600 Volt—Single Throw Non-Fusible

System	Amperes	NEMA Type 1 Indoor	NEMA Type 3R Rainproof *[19]*	NEMA Type 4, 4X, 5 *[20]* 304 Stainless Steel *[21]* Dust tight, Watertight Corrosion Resistant *[19]*	NEMA Type 12K With Knockouts *[19]*	NEMA Type 3R, 5 or 12 *[22]* Without Knockouts *[19]*	Horsepower Ratings (Max.) Volts ac 240		480		600		dc *[23]*	
		Cat. No.	Cat. No.	Cat. No.	Cat. No.	Cat. No.	1Ø	3Ø	1Ø	3Ø	1Ø	3Ø	250	600
2-Wire (2 Blades)—600 Vac, 600 Vdc														
	30	Use three-wire devices for two-wire applications.					—	—	—	—	—	—	—	—
	60						—	—	—	—	—	—	—	—
	100						—	—	—	—	—	—	—	—
	200						—	—	—	—	—	—	—	—
	400	HU265	HU265R	HU265DS	—	HU265AWK	—	125	—	250	—	—	50	50
	600	HU266	HU266R	HU266DS	—	HU266AWK	—	200	—	400	—	—	50	50
	800	HU267	HU267R *[24]*	—	—	HU267AWK	—	—	—	—	50	—	—	50
	1200	HU268	HU268R *[24]*	—	—	HU268AWK	—	—	—	—	50	—	—	50
3-Wire (3 Blades)—600 Vac, 600 Vdc														
	30	HU361	HU361RB	HU361DS	HU361A	HU361AWK	5	10	7-1/2	20	10	30	5	15
	30	HU361EI*[25]*	HU361RBEI *[25]*	HU361DSEI *[25]*	HU361AEI *[25]*	HU361AWKEI*[25]*	5	10	7-1/2	20	10	30	5	15
	30	—	HU3612RB *[26]*	—	HU3612A*[26]*	HU3612AWK*[26]*	5	10	7-1/2	20	10	30	5	15
	60	HU362	HU362RB	HU362DS	HU362A	HU362AWK	10	20	25	50	30	60	10	30
	60	—	—	HU362DSEI*[25]*	—	—	10	20	25	50	30	60	10	30
	100	HU363	HU363RB	HU363DS	HU363A	HU363AWK	20	40	40	75	40	100	20	50
	200	HU364	HU364RB	HU364DS	HU364A	HU364AWK	15	60	50	125	50	150	40	50
	400	HU365	HU365R	HU365DS	—	HU365AWK	—	125	—	250	—	350	50	50
	600	HU366	HU366R	HU366DS	—	HU366AWK	—	200	—	400	—	500	50	50
	800	HU367	HU367R *[24]*	—	—	HU367AWK	—	—	—	500	50	500	—	50
	1200	HU368	HU368R *[24]*	—	—	HU368AWK	—	—	—	—	50	500	—	50
4-Wire (4 Blades)—600 Vac, 600 Vdc *[27]*							2Ø	3Ø	2Ø	3Ø	2Ø	3Ø		
	30	HU461 *[28]*	—	HU461DS	—	HU461AWK *[29]*	10	10	20	20	25	30	10*[30]*	15*[30]*
	60	HU462 *[28]*	—	HU462DS	—	HU462AWK	20	20	40	50	50	60	10	30
	100	HU463 *[28]*	—	HU463DS	—	HU463AWK	30	40	50	75	50	75	20	30
	200	HU464 *[28]*	—	HU464DS	—	HU464AWK	50	60	50	125	50	150	40	50
	400	HU465	—	—	—	HU465AWK	—	**125**	—	**250**	—	350	50	50
	600	HU466	—	—	—	—	—	**200**	—	**400**	—	**500**	50	50
6-Wire (6 Blades)—600 Vac *[27]*								3Ø		3Ø		3Ø		
	30	—	—	HU661DS	—	HU661AWK	—	10	—	20	—	30	—	—
	60	—	—	HU662DS	—	HU662AWK	—	20	—	50	—	60	—	—
	100	—	—	HU663DS	—	HU663AWK	—	50	—	75	—	75	—	—
	200	—	—	HU664DS	—	HU664AWK	—	60	—	125	—	150	—	—

[19] For Rainproof Bolt-On Hubs and Watertight Hubs see Hubs, page 3-15.
[20] Complete rating is NEMA Type 3, 3R, 4, 4X, 5 and 12.
[21] For 316 stainless, see 316 Grade Stainless Steel—NEMA Type 3, 3R, 4, 4X, 5, 12, page 3-12.
[22] Also suitable for NEMA Type 3R application by removing drain screw from bottom endwall.
[23] For switching dc, use two outside switching poles.
[24] Suitable for NEMA Type 5 applications with drain screw installed.
[25] Switches with EI suffix are stocked with factory-installed electrical interlocks with one normally-open and one normally-closed contact.
[26] Use 60 A enclosure accessories, including electrical interlocks.
[27] Not suitable for use as service equipment.
[28] No knockouts are provided.
[29] Requires 60 A accessories. See NEMA Type 4, 4X, 5, 7, 9, and 12, page 3-23 for series rating.
[30] HU461AWK (Series F6) is rated 5 hp@250 Vdc, 15 hp@600 Vdc.

© 2019 Schneider Electric
All Rights Reserved
9/13/2019

NOTE: Consult the wiring diagram of the switch to verify the UL Listed short circuit current rating.

UL Listed Maximum Short Circuit Current Ratings—AC only

Table 3.16: Fusible Safety Switches

Heavy Duty Safety Switch Type	UL Listed Fuse Class	UL Listed Short Circuit Current Ratings
Fusible	H, K	10 kA
	R, J, L	200 kA *[31]*

Non-Fusible Safety Switches

Systems equal or less than 10 kAIR SCCR —Any brand of circuit breaker or fuse not exceeding the ampere rating of the switch may be used in conjunction with a non-fusible safety switch.
Systems above 10 kAIR SCCR—The UL Listed short circuit current rating for Square D non-fusible switches is based upon the switch being used in conjunction with fuses or Square D circuit breakers or Mag-Gard motor circuit protectors.

Table 3.17: Non-Fusible Safety Switches *[32] [33]*

Switch Rating (A)	Fuse or Circuit Breaker Type *[34]*	3-Phase			250 Vdc / 600 Vdc
		240 Vac	480 Vac	600 Vac	
With Upstream Fuse Protection					
All	H, K	10 kA	10 kA	10 kA	Up to 10 kA
	R,T,J,L	200 kA	200 kA	200 kA	
With Upstream Circuit Breaker Protection					
All	Any brand circuit breaker	10 kA	10 kA	10 kA	
30–100	HD	25 kA	18 kA	14 kA	Up to 10 kA
30–100	HG	65 kA	35 kA	18 kA	
30–100	HJ	65 kA	35 kA	25 kA	
30–100	HL	65 kA	35 kA	35 kA	
30–100	HR	65 kA	35 kA	35 kA	
30–100	FA	14 kA	14 kA	14 kA	
30–100	FH	18 kA	18 kA	18 kA	
200	HD, JD	25 kA	18 kA	14 kA	
200	HG, JG	65 kA	35 kA	18 kA	
200	HJ, JJ	65 kA	35 kA	25 kA	
200	HL, JL	65 kA	35 kA	35 kA	
200	HR, JR	65 kA	35 kA	35 kA	
400	LA	22 kA	22 kA	22 kA	
400	LH	25 kA	25 kA	25 kA	
400–600	LD	25 kA	18 kA	14 kA	
400–600	LG	65 kA	35 kA	18 kA	
400–600	LJ	100 kA	65 kA	25 kA	
400–600	LL	100 kA	65 kA	50 kA	
400–600	LR	100 kA	65 kA	65 kA	

[31] On 600 V, 200 A switches, 100,000 A max. on corner grounded delta when protected by Class J or R fuses.
[32] For NEMA Type 4X Fiberglass Reinforced Polyester switches, see page 3-12.
[33] NEMA Type 7/9 SCCR 10 kAIR 600 Vac maximum.
[34] Ampere rating of fuse or circuit breaker not to exceed switch ampere rating.

© 2019 Schneider Electric
All Rights Reserved
9/13/2019

H361SS

Special Application Heavy Duty Safety Switches

316 Grade Stainless Steel—NEMA Type 3, 3R, 4, 4X, 5, 12

316 stainless steel enclosure safety switches offer superior corrosion resistance to a wider range of chemicals than 304 stainless switches. 316 better resists chloride and is often used in marine, waste treatment and transportation applications. Use watertight hubs, see Hubs, page 3-15. Equipment grounding lugs are supplied as standard through 200 A. See Table 3.42 Terminal Lug Data, page 3-21 for wire Termination data for grounding lugs. (For 304 stainless switches, see 240 Volt, page 3-8 and 600 Volt, page 3-9.

Table 3.18: 316 Grade Stainless Steel 3 Pole 600 Vac, 600 Vdc

Amperes	Cat. No	Horsepower Ratings– 3Ø				
		480 Vac[35]		600 Vac [35]		600 Vdc [36]
		Std.	Max.	Std.	Max.	Max.
Fusible—3P, 600 Vac, 600 Vdc						
30	H361SS	5	15	7-1/2	20	15
60	H362SS	15	30	15	50	30
100	H363SS	25	60	30	75	50
200	H364SS	50	125	60	150	50
400	H365SS	100	250	125	350	50
600	H366SS	150	400	200	500	50
Non-Fusible—3P, 600 Vac, 600 Vdc						
30	HU361SS	—	20	—	30	15
60	HU362SS	—	50	—	60	30
100	HU363SS	—	75	—	100	50
200	HU364SS	—	125	—	150	50
400	HU365SS	—	250	—	350	50
600	HU366SS	—	400	—	500	50

H363DF

Fiberglass Reinforced Polyester Enclosures—NEMA Type 4X

Fiberglass reinforced polyester enclosures are watertight, corrosion resistant, and impervious to windblown dust, rain, and splashing liquid. The molded fiberglass is extremely stable in a wide range of operating temperatures and can withstand heavy impact. Switches are furnished with hubs, conduit provisions Table 3.43, and equipment grounding lugs. See CAD drawings of the switch to verify the UL listed short circuit current rating or the enclosed safety switch catalog. UL Listed.

Table 3.19: Fiberglass Reinforced Polyester Enclosures NEMA Type 4X 3 Pole 600 Vac, 600 Vdc

Amperes	Cat. No.	Solid Neutral Assembly Kit	Class R Fuse Kits	Electrical Interlock Kits Field-Installed Cat. No.		Horsepower Ratings– 3Ø					Hubs[37]
						480 Vac [38]		600 Vac [38]		600 Vdc [39]	
			Cat. No.	1 NO/1 NC Contacts	2 NO/2 NC Contacts	Std.	Max.	Std.	Max.	Max.	
Fusible—3P, 600 Vac, 600 Vdc											
30	H361DF	SN03	RFK06	9999TC10	9999TC20	5	15	7-1/2	20	15	3/4
60	H362DF	SN03	RFK06H	9999TC10	9999TC20	15	30	15	50	30	1-1/4
100	H363DF	SN0610	RFK10	9999TC10	9999TC20	25	60	30	75	50	2
200	H364DF	—	HRK1020	9999R8	9999R9	50	125	60	150	50	2-1/2
Non-Fusible—3P, 600 Vac, 600 Vdc											
30	HU361DF	SN03	—	9999TC10	9999TC20	—	20	—	30	15	3/4
60	HU362DF	SN03	—	9999TC10	9999TC20	—	50	—	60	30	1-1/4
100	HU363DF	SN0610	—	9999TC10	9999TC20	—	75	—	75	50	2
200	HU364DF	—	—	9999R8	9999R9	—	125	—	150	50	2-1/2

[35] Std.—Using fast acting, one time fuses. Max.—Using dual element time delay fuses.
[36] For switching dc use two switching poles.
[37] Two hubs and hub drilling template are provided for field installation.
[38] Std.—Using fast acting, one time fuses. Max.—Using dual element time delay fuses.
[39] For switching dc use two switching poles.

© 2019 Schneider Electric
All Rights Reserved
9/13/2019

NEMA Type 1 and 3R

See Table 3.42 Terminal Lug Data, page 3-21 for terminal lug data for the series switches listed in the dimension table below.

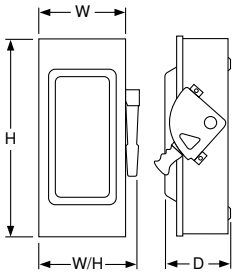

Typical NEMA Type 1

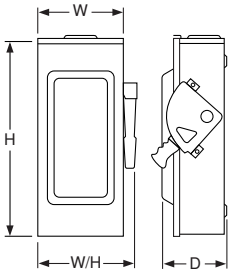

Typical NEMA Type 3R

Table 3.44: Approximate Dimensions

Cat. No.	Series	H		W		D		W/H		Cat. No.	Series	H		W		D		W/H	
		in.	mm	in.	mm	in.	mm	in.	mm			in.	mm	in.	mm	in.	mm	in.	mm
H221N	F5	14.60	371	6.50	165	4.88	124	7.55	192	H364, N	F5	29.00	737	17.13	435	8.25	210	18.50	470
H221NRB	F5	14.88	378	6.63	168	4.88	124	7.55	192	H364RB, NRB	F5	29.25	743	17.25	438	8.50	216	18.63	473
H222N	F5	14.60	371	6.50	165	4.88	124	7.55	192	H365, N	E4	50.25	1276	27.63	702	10.13	257	27.63	702
H222NRB	F5	14.88	378	6.63	168	4.88	124	7.55	192	H365R, NR	E5	50.31	1278	27.76	705	9.53	242	27.88	708
H223N	F5	21.25	540	8.50	216	6.38	162	10.50	267	H366, N	E4	50.25	1276	27.63	702	10.13	257	27.63	702
H223NRB	F5	21.25	540	8.50	216	6.38	162	10.50	267	H366NR, R	E5	50.31	1278	27.76	705	9.53	242	27.88	708
H224N	F5	29.00	737	17.13	435	8.25	210	18.50	470	H367, N	E4	69.13	1756	36.62	930	17.75	451	36.62	930
H224NRB	F5	29.25	743	17.25	438	8.50	216	18.63	473	H367NR, R	E4	69.13	1756	36.62	930	17.75	451	36.62	930
H225, N	E4	50.25	1276	27.63	702	10.13	257	27.63	702	H368, N	E4	69.13	1756	36.62	930	17.75	451	36.62	930
H225NR, R	E5	50.31	1278	27.76	705	9.53	242	27.88	708	H368NR, R	E4	69.13	1756	36.62	930	17.75	451	36.62	930
H226, N	E4	50.25	1276	27.63	702	10.13	257	27.63	702	H461	F5	20.50	521	14.75	375	6.85	174	16.13	410
H226NR, R	E5	50.31	1278	27.76	705	9.53	242	27.88	708	H462	F5	20.50	521	14.75	375	6.85	174	16.13	410
H227, N	E4	69.13	1756	36.62	930	17.75	451	36.62	930	H463	F5	20.50	521	14.75	375	6.85	174	16.13	410
H227NR, R	E4	69.13	1756	36.62	930	17.75	451	36.62	930	H464	F5	29.00	737	23.25	591	8.75	222	24.88	632
H228, N	E4	69.13	1756	36.62	930	17.75	451	36.62	930	H465	E4	50.25	1276	33.88	861	10.13	257	33.88	861
H228NR, R	E4	69.13	1756	36.62	930	17.75	451	36.62	930	H466	E4	50.25	1276	33.88	861	10.13	257	33.88	861
H265	E4	50.25	1276	27.63	702	10.13	257	27.63	702	HU265	E4	50.25	1276	27.63	702	10.13	257	27.63	702
H265R	E5	50.31	1278	27.76	705	9.53	242	27.88	708	HU265R	E5	50.31	1278	27.76	705	9.53	242	27.88	708
H266	E4	50.25	1276	27.63	702	10.13	257	27.63	702	HU266	E4	50.25	1276	27.63	702	10.13	257	27.63	702
H266R	E5	50.31	1278	27.76	705	9.53	242	27.88	708	HU266R	E5	50.31	1278	27.76	705	9.53	242	27.88	708
H267	E4	69.13	1756	36.62	930	17.75	451	36.62	930	HU267	E4	69.13	1756	36.62	930	17.75	451	36.62	930
H267R	E4	69.13	1756	36.62	930	17.75	451	36.62	930	HU267R	E4	69.13	1756	36.62	930	17.75	451	36.62	930
H268	E4	69.13	1756	36.62	930	17.75	451	36.62	930	HU268	E4	69.13	1756	36.62	930	17.75	451	36.62	930
H268R	E4	69.13	1756	36.62	930	17.75	451	36.62	930	HU268R	E4	69.13	1756	36.62	930	17.75	451	36.62	930
H321N	F5	14.60	371	6.50	165	4.88	124	7.55	192	HU361	F5	14.60	371	6.50	165	4.88	124	7.55	192
H321NRB	F5	14.88	378	6.63	168	4.88	124	7.55	192	HU361RB	F5	14.88	378	6.63	168	4.88	124	7.55	192
H322N	F5	14.60	371	6.50	165	4.88	124	7.55	192	HU361WA	F6	18.19	462	9.00	229	6.81	173	10.50	267
H322NRB	F5	14.88	378	6.63	168	4.88	124	7.55	192	HU361WC	F6	18.19	462	9.00	229	6.81	173	10.50	267
H323N	F5	21.25	540	8.50	216	6.38	162	10.50	267	HU362	F5	17.50	445	9.00	229	6.38	162	10.50	267
H323NRB	F5	21.25	540	8.50	216	6.38	162	10.50	267	HU362RB	F5	17.50	445	9.00	229	6.38	162	10.50	267
H324N	F5	29.00	737	17.13	435	8.25	210	18.50	470	HU362WA	F6	18.19	462	9.00	229	6.81	173	10.50	267
H324NRB	F5	29.25	743	17.25	438	8.50	216	18.63	473	HU362WC	F6	16.75	425	9.00	229	7.00	178	10.50	267
H325, N	E4	50.25	1276	27.88	708	10.13	257	27.88	708	HU362WH	F5	18.19	462	9.00	229	6.81	173	10.50	267
H325R, NR	E5	50.31	1278	27.76	705	9.53	242	27.88	708	HU363	F5	21.25	540	8.50	216	6.38	162	10.50	267
H326, N	E4	50.25	1276	27.63	702	10.13	257	27.63	702	HU363RB	F5	21.25	540	8.50	216	6.38	162	10.50	267
H326R, NR	E5	50.31	1278	27.76	705	9.53	242	27.88	708	HU363WA	F6	21.85	462	9.00	229	6.81	173	10.50	267
H327, N	E4	69.13	1756	36.62	930	17.75	451	36.62	930	HU363WC	F6	21.85	555	9.00	229	6.81	173	10.50	267
H327R, NR	E4	69.13	1756	36.62	930	17.75	451	36.62	930	HU364	F5	29.00	737	17.13	435	8.25	210	18.50	470
H328, N	E4	69.13	1756	36.62	930	17.75	451	36.62	930	HU364RB	F5	29.25	743	17.25	438	8.50	216	18.63	473
H328R, NR	E4	69.13	1756	36.62	930	17.75	451	36.62	930	HU365	E4	50.25	1276	27.63	702	10.13	257	27.63	702
H361, N	F5	14.60	371	6.50	165	4.88	124	7.55	192	HU365R	E5	50.31	1278	27.76	705	9.53	242	27.88	708
H361-2	F5	17.50	445	9.00	229	6.38	162	10.50	267	HU366	E4	50.25	1276	27.63	702	10.13	257	27.63	702
H361NRB, RB	F5	14.88	378	6.63	168	4.88	124	7.55	192	HU366R	E5	50.31	1278	27.76	705	9.53	242	27.88	708
H361WA	F6	18.19	462	9.00	229	6.81	173	10.50	267	HU367	E4	69.13	1756	36.62	930	17.75	451	36.62	930
H361WC	F6	18.19	462	9.00	229	6.81	173	10.50	267	HU367R	E4	69.13	1756	36.62	930	17.75	451	36.62	930
H362, N	F5	17.50	445	9.00	229	6.38	162	10.50	267	HU368	E4	69.13	1756	36.62	930	17.75	451	36.62	930
H362NRB, RB	F5	17.50	445	9.00	229	6.38	162	10.50	267	HU368R	E4	69.13	1756	36.62	930	17.75	451	36.62	930
H362WA	F6	18.19	462	9.00	229	6.81	173	10.50	267	HU461	F5	20.50	521	14.75	375	6.85	174	16.13	410
H362WC	F6	16.75	425	9.00	229	7.00	178	10.50	267	HU462	F5	20.50	521	14.75	375	6.85	174	16.13	410
H362WH	F5	18.19	462	9.00	229	6.81	173	10.50	267	HU463	F5	20.50	521	14.75	375	6.85	174	16.13	410
H363, N	F5	21.25	540	8.50	216	6.38	162	10.50	267	HU464	F5	29.00	737	23.25	591	8.75	222	24.88	632
H363NRB, RB	F5	21.25	540	8.50	216	6.38	162	10.50	267	HU465	E4	50.25	1276	33.88	861	10.13	257	33.88	861
H363WA	F6	21.85	462	9.00	229	6.81	173	10.50	267	HU466	E4	50.25	1276	33.88	861	10.13	257	33.88	861
H363WC	F6	21.85	555	9.00	229	6.81	173	10.50	267										

© 2019 Schneider Electric
All Rights Reserved
9/13/2019

NEMA Type 4, 4X, 5, 7, 9, and 12

See Table 3.42 Terminal Lug Data, page 3-21 for terminal lug data for the series switches listed in the dimension table below.

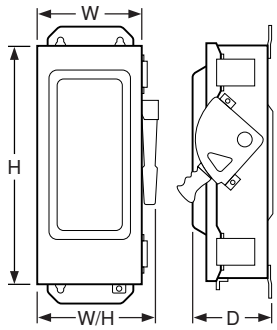

Typical NEMA Type 4, 4X, 5, 12, 12K
(Stainless has flat front)

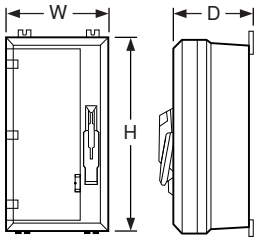

Typical NEMA Type 4X
Fiberglass and Krydon

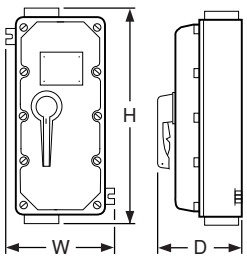

Typical NEMA Type 7, 9

Table 3.45: Approximate Dimensions

Cat. No.	Series	H		W		D		W/H	
		in.	mm	in.	mm	in.	mm	in.	mm
H60XFA	E1	15.93	405	9.87	251	6.96	177	9.87	251
H100XFA	E1	15.93	405	9.87	251	6.96	177	9.87	251
H221AWK,A	F6	14.60	371	6.63	168	4.96	125	7.55	192
H221DS	F6	14.93	379	7.22	183	5.11	130	8.67	220
H221-2AWK	F6	16.50	419	9.00	229	7.00	178	10.50	267
H222AWK,A	F6	14.60	371	6.63	168	4.96	125	7.55	192
H222DS	F6	14.93	379	7.22	183	5.11	130	8.67	220
H223AWK,A	F6	20.50	521	9.00	229	7.00	178	10.50	267
H223DS	F6	20.82	529	9.36	238	6.97	177	11.25	286
H224A,AWK	F6	29.00	737	17.25	438	8.75	216	18.63	473
H224DS	F6	29.00	737	17.75	451	8.88	226	19.25	489
H225AWK,DS	E4	46.25	1175	26.25	667	10.13	259	26.25	667
H225NAWK,NDS	E4	46.25	1175	26.25	667	10.13	259	26.25	667
H225XJG	A1	22.56	573	10.88	276	7.75	197	10.88	276
H226AWK,DS	E5	46.25	1175	26.25	667	10.13	259	26.25	667
H226NAWK,NDS	E5	46.25	1175	26.25	667	10.13	259	26.25	667
H227AWK,NAWK	E4	69.13	1756	36.62	930	17.75	451	36.62	930
H228AWK,NAWK	E4	69.13	1756	36.62	930	17.75	451	36.62	930
H265AWK,DS	E5	46.25	1175	26.25	667	10.13	259	26.25	667
H266AWK,A,DS	E5	46.25	1175	26.25	667	10.13	259	26.25	667
H267AWK,NAWK	E4	69.13	1756	36.62	930	17.75	451	36.62	930
H268AWK,NAWK	E4	69.13	1756	36.62	930	17.75	451	36.62	930
H321AWK,A	F6	14.60	371	6.63	168	4.96	125	7.55	192
H321DS	F6	14.93	379	7.22	183	5.11	130	8.67	220
H322AWK,A	F6	14.60	371	6.63	168	4.96	125	7.55	192
H322DS	F6	14.93	379	7.22	183	5.11	130	8.67	220
H323AWK,A	F6	20.50	521	9.00	229	7.00	178	10.50	267
H323DS	F6	20.82	529	9.36	238	6.97	177	11.25	286
H324A,AWK	F6	29.00	737	17.25	438	8.75	216	18.63	473
H324DS	F6	29.00	737	17.75	451	8.88	226	19.25	489
H325AWK,DS	E5	46.25	1175	26.25	667	10.13	259	26.25	667
H325NAWK,NDS	E5	46.25	1175	26.25	667	10.13	259	26.25	667
H326AWK,DS	E5	46.25	1175	26.25	667	10.13	259	26.25	667
H326NAWK,NDS	E5	46.25	1175	26.25	667	10.13	259	26.25	667
H327AWK,NAWK	E4	69.13	1756	36.62	930	17.75	451	36.62	930
H328AWK,NAWK	E4	69.13	1756	36.62	930	17.75	451	36.62	930
H361AWA	F7	16.50	419	9.00	229	7.00	178	10.50	267
H361AWC	F7	16.50	419	9.00	229	7.00	178	10.50	267
H361AWK,A	F6	14.60	371	6.63	168	4.96	125	7.55	192
H361DS	F6	14.93	379	7.22	183	5.11	130	8.67	220
H361DSWA	F7	16.87	428	8.92	227	5.11	130	10.81	275
H361DSWC	F7	16.87	428	8.92	227	5.11	130	10.79	274
H361DF	F1	16.50	419	11.00	279	8.80	224	11.00	279
H361DX	F1	19.40	493	11.40	290	8.60	218	11.40	290
H361SS	F6	14.93	379	7.22	183	5.11	130	8.67	220
H361-2AWK,A	F6	16.50	419	9.00	229	7.00	178	10.50	267
H362AWA	F7	16.50	419	9.00	229	7.00	178	10.50	267
H362AWC	F7	16.50	419	9.00	229	7.00	178	10.50	267
H362AWH	F6	16.50	419	9.00	229	7.00	178	10.50	267
H362AWK,A	F6	16.50	419	9.00	229	7.00	178	10.50	267
H362DS	F6	16.87	428	8.92	227	6.97	177	10.81	275
H362DSWA	F7	16.87	428	8.92	227	5.11	130	10.81	275
H362DSWC	F7	16.87	428	8.92	227	5.11	130	10.79	274
H362DF	F1	16.50	419	11.00	279	8.80	224	11.00	279
H362DX	F1	19.40	493	11.40	290	8.60	218	11.40	290
H362SS	F6	16.87	428	8.92	227	6.97	177	10.81	275
H363AWA	F7	20.50	521	9.00	229	7.00	178	10.50	267
H363AWC	F7	20.50	521	9.00	229	7.00	178	10.50	267
H363AWK,A	F6	20.50	521	9.00	229	7.00	178	10.50	267
H363DS	F6	20.82	529	9.36	238	6.97	177	11.25	286
H363DSWA	F7	20.82	529	9.36	238	6.97	177	11.25	286
H363DSWC	F7	20.82	529	9.36	238	6.97	177	11.25	286
H363DF	F1	24.80	630	13.70	348	12.00	305	13.70	348
H363DX	F1	25.25	641	11.40	290	8.60	218	11.40	290
H363SS	F6	20.82	529	9.36	238	6.97	177	11.25	286
H364A,AWK	F6	29.00	737	17.25	438	8.75	216	18.63	473
H364DS,NDS	F6	29.00	737	17.75	451	8.88	226	19.25	489
H364NA,NAWK	F6	29.00	737	17.25	438	8.75	216	18.63	473
H364DF	E1	31.30	795	26.30	668	11.80	300	26.30	668
H364SS	F6	29.00	737	17.75	451	8.88	226	19.25	489
H365AWK,DS,SS	E5	46.25	1175	26.25	667	10.13	259	26.25	667
H365NAWK,NDS	E5	46.25	1175	26.25	667	10.13	259	26.25	667
H366AWK,DS	E5	46.25	1175	26.25	667	10.13	259	26.25	667
H366NAWK,NDS,SS	E5	46.25	1175	26.25	667	10.13	259	26.25	667
H367AWK,NAWK	E4	69.13	1756	36.62	930	17.75	451	36.62	930
H368AWK,NAWK	E4	69.13	1756	36.62	930	17.75	451	36.62	930
H461AWK	F6	20.50	521	14.75	375	6.80	173	16.13	410
H461DS	F6	20.82	529	15.08	383	6.97	177	16.85	428
H462AWK	F6	20.50	521	14.75	375	6.80	173	16.13	410
H462DS	F6	20.82	529	15.08	383	6.97	177	16.85	428
H463AWK	F6	20.50	521	14.75	375	6.80	173	16.13	410
H463DS	F6	20.82	529	15.08	383	6.97	177	16.85	428
H464AWK	F6	29.00	737	23.25	591	8.75	222	24.88	632
H464DS	F6	29.00	737	23.75	603	8.88	226	25.25	641
H465AWK	E5	46.25	1175	32.50	826	10.13	259	32.50	826
H663AWK	F6	20.50	521	14.75	375	6.80	173	16.13	410
H663DS	F6	20.82	529	15.08	383	6.97	177	16.85	428
H664AWK	F6	29.00	737	23.25	591	8.75	222	24.88	632
H664DS	F6	29.00	737	23.75	603	8.88	226	25.25	641
HU265AWK,DS	E5	46.25	1175	26.25	667	10.13	259	26.25	667
HU266AWK,DS	E5	46.25	1175	26.25	667	10.13	259	26.25	667
HU267AWK	E4	69.13	1756	36.62	930	17.75	451	36.62	930
HU268AWK	E4	69.13	1756	36.62	930	17.75	451	36.62	930
HU361AWA	F7	16.50	419	9.00	229	7.00	178	10.50	267
HU361AWC	F7	16.50	419	9.00	229	7.00	178	10.50	267
HU361AWK,A	F6	14.60	371	6.63	168	4.96	125	7.55	192
HU361DS	F6	14.93	379	7.22	183	5.11	130	8.67	220
HU361DSWA	F7	16.87	428	8.92	227	5.11	130	10.81	275
HU361DSWC	F7	16.87	428	8.92	227	5.11	130	10.79	274

© 2019 Schneider Electric
All Rights Reserved
9/13/2019

Table 3.45 Approximate Dimensions (cont'd.)

Cat. No.	Series	H		W		D		W/H	
		in.	mm	in.	mm	in.	mm	in.	mm
HU361DF	F1	16.50	419	11.00	279	8.80	224	11.00	279
HU361DX	F1	19.40	493	11.40	290	8.60	218	11.40	290
HU361SS	F6	14.93	379	7.22	183	5.11	130	8.67	220
HU362AWA	F7	16.50	419	9.00	229	7.00	178	10.50	267
HU362AWC	F7	16.50	419	9.00	229	7.00	178	10.50	267
HU362AWH	F6	16.50	419	9.00	229	7.00	178	10.50	267
HU362AWK,A	F6	16.50	419	9.00	229	7.00	178	10.50	267
HU362DS	F6	16.87	428	8.92	227	6.97	177	10.81	275
HU362DSWA	F7	16.87	428	8.92	227	5.11	130	10.81	275
HU362DSWC	F7	16.87	428	8.92	227	5.11	130	10.79	274
HU362DF	F1	16.50	419	11.00	279	8.80	224	11.00	279
HU362DX	F1	19.40	493	11.40	290	8.60	218	11.40	290
HU362SS	F6	16.87	428	8.92	227	6.97	177	10.81	275
HU363AWA	F7	20.50	521	9.00	229	7.00	178	10.50	267
HU363AWC	F7	20.50	521	9.00	229	7.00	178	10.50	267
HU363AWK,A	F6	20.50	521	9.00	229	7.00	178	10.50	267
HU363DS	F6	20.82	529	9.36	238	6.97	177	11.25	286
HU363DSWA	F7	20.82	529	9.36	238	6.97	177	11.25	286
HU363DSWC	F7	20.82	529	9.36	238	6.97	177	11.25	286
HU363DF	F1	24.80	630	13.70	348	12.00	305	13.70	348
HU363DX	F1	25.25	641	11.40	290	8.60	218	11.40	290
HU363SS	F6	20.82	529	9.36	238	6.97	177	11.25	286
HU364A,AWK	F6	29.00	737	17.25	438	8.75	216	18.63	473
HU364DF	E1	31.30	795	26.30	668	11.80	300	26.30	668
HU364DS	F6	29.00	737	17.75	451	8.88	226	19.25	489
HU364SS	F6	29.00	737	17.75	451	8.88	226	19.25	489
HU365AWK,DS,SS	E5	46.25	1175	26.25	667	10.13	259	26.25	667
HU366AWK,DS,SS	E5	46.25	1175	26.25	667	10.13	259	26.25	667
HU367AWK	E4	69.13	1756	36.62	930	17.75	451	36.62	930
HU368AWK	E4	69.13	1756	36.62	930	17.75	451	36.62	930
HU461AWK	F6	20.50	521	14.75	375	6.80	173	16.13	411
HU461DS	F6	20.82	529	15.08	383	6.97	177	16.85	428
HU462AWK	F6	21.25	540	16.13	410	6.80	173	16.13	410
HU462DS	F6	20.82	529	15.08	383	6.97	177	16.85	428
HU463AWK	F6	20.50	521	14.75	375	6.80	173	16.13	410
HU463DS	F6	20.82	529	15.08	383	6.97	177	16.85	428
HU464AWK	F6	29.00	737	23.25	591	8.75	222	24.88	632
HU464DS	F6	29.00	737	23.75	603	8.88	226	25.25	641
HU465AWK	E5	46.25	1175	32.50	826	10.13	259	32.50	826
HU661AWK	F6	20.50	521	14.75	375	6.80	173	16.13	410
HU661DS	F6	20.82	529	15.08	383	6.97	177	16.85	428
HU662AWK	F6	20.50	521	14.75	375	6.80	173	16.13	410
HU662DS	F6	20.82	529	15.08	383	6.97	177	16.85	428
HU663AWK	F6	20.50	521	14.75	375	6.80	173	16.13	410
HU663DS	F6	20.82	529	15.08	383	6.97	177	16.85	428
HU664AWK	F6	29.00	737	23.25	591	8.75	222	24.88	632
HU664DS	F6	29.00	737	23.75	603	8.88	226	25.25	641

© 2019 Schneider Electric
All Rights Reserved
9/13/2019

THIS PAGE LEFT INTENTIONALLY BLANK

Non-Reversing Combination Starters, NEMA Style

General Information

Class 8538 and 8539 Type S combination starters combine the requirements of motor overload and short-circuit protection into one package. These starters are manufactured in accordance with NEMA standards and are UL Listed (although some Form numbers may not be listed—contact your local Square D™ representative for information). Class 8538 and 8539 combination starters are designed to operate at 600 Vac maximum, 50 to 60 Hz—and come standard with melting alloy overload relays. Bimetallic and solid-state overload relays are available as options (see pages 45–46).

Type 2 Coordination

Square D brand is one of the leaders in North America and Europe in providing starters that are verified by UL to comply with IEC 947-4-1 and Type 2 coordination. This means that the controller components—the contactor, the overload relay, and the motor branch circuit protective device (fuses or circuit breaker)—will be suitable for further use following a short-circuit fault (even though contact welding is recognized but can be easily broken). This allows for replacement of components during normal scheduled maintenance.

Square D starters and specified fuses have been tested by UL and CSA (at 100,000 A fault current) for operation at 600 Vac. Class 8538 Type S combination starters, NEMA Size 0–5, with fusible disconnect switches have tested to Type 2 performance criteria.

Class 8538 Disconnect Switch Type

Class 8538 combination starters can be furnished with either a fusible or non-fusible disconnect switch. Class 8538 combination starters are available in NEMA Size 0–6.

The design of the fusible disconnect switch combination starter uses a flange-operated visible blade switch. Interchangeable fuse clips, straight-through wiring, space for a fused control transformer with additional capacity, and provisions for adding a disconnect switch electrical interlock are key features of the combination starters.

The fusible disconnect switch device can be furnished with Class R fuse clips, increasing the short-circuit rating to 100,000 A.

Size 0–2 non-fusible combination starters can be converted to a fusible type. See catalog 9999CT9701 for fuse block kits and fuse kits.

Class 8539 Electronic Motor Circuit Protector (MCP) or Thermal-Magnetic Circuit Breaker Type

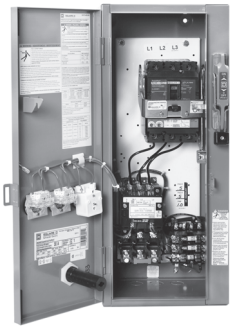

Class 8539 combination starters can be furnished with either an electronic motor circuit protector (MCP) or a thermal-magnetic circuit breaker. Class 8539 combination starters are available in NEMA Size 0–7.

The circuit breakers in Class 8539 combination starters can be furnished with a factory installed auxiliary switch for remote indication of an open/tripped or closed circuit breaker. For one auxiliary switch, specify **Form Y74**. For two auxiliary switches, specify **Form Y75**. The switches are furnished with normally open and normally closed circuits with a common connection. Contacts must be used on the same polarity and are rated 15 A at 240 Vac.

An alarm switch can be factory installed only—specify **Form Y742.** The alarm switch is used to actuate bell alarms and warning lights. It operates only when the circuit breaker is tripped. The alarm switch consists of a normally open single-pole, single-throw switch. The contacts are rated 4 A at 240 Vac.

Circuit breaker combination starters have short-circuit interrupting ratings up to 100,000 A. See page 39 for details.

© 1998–2017 Schneider Electric
All Rights Reserved

Enclosures—Class 8538 and 8539 combination starters are available in the following enclosures:

- NEMA 1 General Purpose
- NEMA 4 & 4X Watertight and Dusttight Stainless Steel
- NEMA 4X Watertight, Dusttight, and Corrosion Resistant Glass-Polyester
- NEMA 12/3R Dusttight and Driptight for Industrial Use

These enclosures have three holes (30.5 mm) as standard for installation of Class 9001 Type K push buttons, pilot lights, and other cover-mounted control units.

The NEMA 4 & 4X stainless steel enclosures (Sizes 0–5) have a brushed finish. Sizes 6–7 are painted sheet-steel enclosures and are rated NEMA 4 only. Hubs come standard on NEMA 4X enclosures.

NEMA 12 enclosures can be field modified for outdoor applications. Specify **Form G26** for NEMA 3R (no additional charge). See page 19 for additional information.

Oversize Enclosures—Class 8538 disconnect switch type and Class 8539 electronic motor circuit protector (MCP), Sizes 0–2, are also available in NEMA 1, 4 & 4X, and 12/3R oversize enclosures. The oversize enclosures provide additional panel space for customer installation of control transformers, fuse blocks, terminal blocks, relays, and other auxiliary equipment.

Coil Voltages—AC coils are available for application at 50–60 Hz. The coils for NEMA Size 00–5 devices are designed to operate satisfactorily on line voltages of 85–110% of rated voltage. NEMA Size 6–7 contactors come with a DC coil operated by a solid-state rectifier circuit, which is powered by an AC source and designed to operate satisfactorily on line voltages of 90–110% of rated voltage.

> **NOTE:** A voltage code is required when ordering combination starters. Polyphase combination starters with 24 Vac or 120 Vac coil voltages come wired for **separate control**.

Auxiliary Contacts—Additional auxiliary contacts can be added to Type S starters. Refer to page 37 for the maximum number of auxiliary units and the Form designations for factory-installed auxiliary contacts. See catalog 9999CT9701 for auxiliary contact kits for field installation.

Type S Accessories—Additional accessories such as fuse blocks, fuse clip kits, disconnect switch and circuit breaker interlocks, and cover-mounted control units are available as field modifications. See catalog 9999CT9701. For factory modifications (Forms), see page 42.

© 1998–2017 Schneider Electric
All Rights Reserved

Overload Protection

Type S magnetic starters are used for full-voltage starting and stopping of AC squirrel cage motors. Motor overload protection for three-phase starter applications can be provided through one of four options, as follows:

Solid-State Overload Relay Protection (Motor Logic™ SSOLR)—These ambient insensitive overload relays are available on Sizes 00–6 and standard on Size 7. They provide phase loss and phase unbalance protection. To order, add Form **H30** (for selectable trip class 10 or 20 protection). For more information about Motor Logic SSOLRs, see page 45 and catalog 9065CT9701. (Product catalog number example: 8536SCO3V06**H30**)

Adapted Bimetallic Overload Relay (NEMA Sizes 00–1)—The adapted bimetallic motor starter consists of a specially designed adapter. It attaches with bus bars to the Type S NEMA contactor and holds the IEC-style bimetallic overload relay (type LRD or LR3D). This starter configuration can be ordered by adding Form **E** (adapter only) to the standard catalog number. The LRD or LR3D bimetallic overload relay must be purchased separately, based on the motor FLA, and installed in the field in order to operate the starter. For more information—including how to order the adapted bimetallic overload relay as a factory installed option—see page 45 and catalog 9065CT9701. (Product catalog number example: 8536SCO3V06**E**)

TeSys™ T Motor Management System (NEMA Sizes 1–6)—The flexible TeSys T system integrates seamlessly into your automation system through five major communication protocols. The TeSys T system can predict what will happen in the process, as it accurately monitors current, voltage, and power over a wide range. This option is available for control voltages of 24 Vac or 100–240 Vac. For additional information about the TeSys T Motor Management System, see page 46 and catalog 9065CT9701.

> **NOTE:** The full catalog number contains a four-character Form number (for example, 8536SCO3V06**H616**).

Melting Alloy Thermal Overload Relays—Melting alloy type thermal overload blocks are installed as part of the starter, and thermal elements must be selected and installed separately in order to operate the starter. For a three-phase motor, three thermal units must be ordered using the tables in catalog 9065CT9701. The catalog number includes no Form number (for example, 8536SCO3V06).

© 1998–2017 Schneider Electric
All Rights Reserved

Table 10: Coil Voltage Codes

Voltage		Code
60 Hz	50 Hz	
24[1]	—	V01
120[1]	110	V02
208	—	V08
240	220	V03
277[1]	—	V04
480	440	V06
600	550	V07
Specify	Specify	V99

[1] **Form S** (no charge) must be included with these voltage codes where a separate source of voltage is used for the control coil (for example, order as 8538SCG11S8V02H30**S**). Note that **24 V** coils are **not** available on Sizes 4–7.

NOTE: For voltage codes used with control transformers, see Table 71 on page 44.

© 1998–2017 Schneider Electric
All Rights Reserved

Dimensions for Non-Reversing Combination Starters

NEMA 1 Enclosures

NOTE: The dimensions in Tables 21 and 22 include space for Form **FF4T** (standard control transformer). An oversize enclosure may be required for Form **FF4T11** (100 VA additional capacity) and Form **FF4T12** (200 VA additional capacity). See Table 57 on page 38 for replacement transformer selection.

Table 21: Sizes 0–2, NEMA 1 Enclosure—See Figure 1

NEMA Size	Class	Type	Dimensions, in.																Top & Bottom		Sides	Wt. (lb)
			A	B	C	D	E	F	G	H	I	J	K	L	M	N	O	P	W	X	Y	
0–1	8538	SBG, SCG	9.5	22.5	8.34	6.38	20.5	14.66	1.81	1.69	3	2.31	1.06	3.25	2.19	1.25	0.88	—	0.5–0.75	0.5–0.75	0.5	38
	8539	SBG, SCG	9.5	22.5	9.84	6.38	20.5	14.66	1.81	1.69	3	2.31	1.06	3.25	2.19	1.25	0.88	—	0.5–0.75	0.5–0.75	0.5	38
2	8538, 8539	SDG	10.5	26	9.59	7.38	24	16.91	2.13	2	4	2.31	1.06	3.25	2.19	1.25	0.88	—	1–1.25	0.5–0.75	0.5	54

Table 22: Sizes 3–6, NEMA 1 Enclosure—See Figure 2

NEMA Size	Type	Class	Dimensions, in.																Top & Bottom		Sides	Wt. (lb)
			A	B	C	D	E	F	G	H	I	J	K	L	M	N	O	P	W	X	Y	
3[1]	8538, 8539	SEG	15.25	42	10.59	9.25	3	22.72	41	0.5	—	2.83	3.53	5	2.69	5.38	1.28	0.91	1–1.25 2–2.5	0.5–0.75	0.5	102
4	8538	SFG	16	52.5	10.53	10	3	23.66	51.5	0.5	—	2.83	3.53	5	2.69	5.38	1.28	0.91	2.5	0.5–0.75	0.5	163
	8539	SFG	16	52.5	10.53	10	3	23.66	51.5	0.5	—	2.83	3.53	5	2.69	5.38	1.28	0.91	2.5	0.5–0.75	0.5	163
5	8538	SGG	20	78	15.5	12	4	29.41	77	0.5	—	3.52	4.61	9.25	3.19	—	—	—	0.5–0.75[2]	3	—	450
	8539	SGG	20	66	13.72	12	4	29.41	65	0.5	—	3.52	4.61	5	3.19	—	—	—	0.5–0.75	3	—	420
6[3]	8538, 8539	SHG	36	90	21.03	—	—	41.38	—	—	—	—	—	5	—	—	—	—	—	—	—	—

[1] For Class 8538 Size 3 devices with 200 A fuse clips, use the dimensions for Class 8538 Size 4 devices.
[2] Left side only.
[3] Size 6 enclosures are floor mounting.

Figure 1: NEMA 1 Enclosure Sizes 0–2

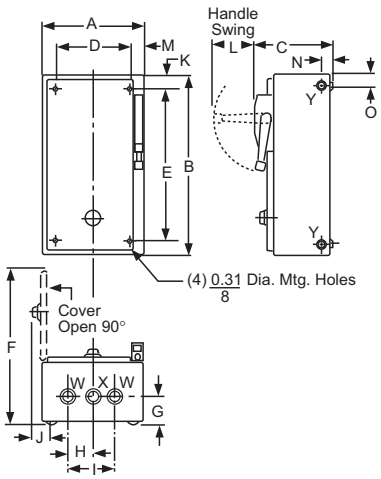

Figure 2: NEMA 1 Enclosure Sizes 3–6

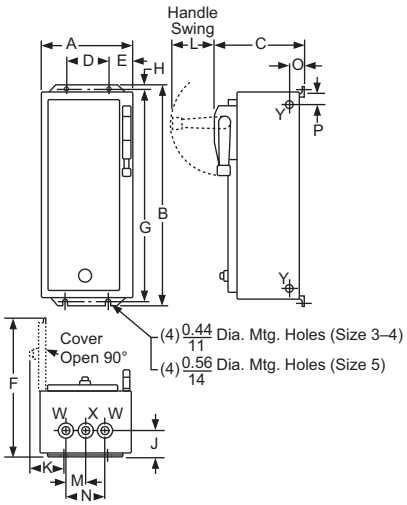

© 1998–2017 Schneider Electric
All Rights Reserved

NEMA 12/3R Enclosures

Modifying NEMA 12 for Outdoor Applications (not for use in salt air or corrosive environments)

Field Modifications for NEMA 3 dusttight, raintight, and sleet resistant outdoor applications are as follows: Watertight conduit hubs or equivalent provision for watertight connection at the conduit entrance shall be used.

Field Modifications for NEMA 3R rainproof and sleet resistant outdoor applications are as follows:

1. Watertight conduit hubs or equivalent provision for watertight connection at the conduit entrance, when the conduit enters at a level higher than the lowest live part, shall be used.
2. Drain holes of 1/8 inch diameter shall be added to the bottom of the enclosure.

Table 23: NEMA 12/3R Enclosure (see Figure 3)
Dimensions include space for control circuit transformers.

NEMA Size	Class	Type	Dimensions, in.										Wt. (lb)
			A	B	C	D	E	F	G	H	I	J	
0–1	8538	SBA SCA	9.5	8.34	24	3.25	2.5	4.5	23.5	0.59	4.44	14.31	40
	8539	SBA SCA	9.5	9.84	24	3.25	2.5	4.5	23.5	0.59	4.44	14.31	40
2	8538, 8539	SDA	10.5	9.59	27.75	3.25	2.5	5.5	27	0.38	4.13	16.56	55
3[1]	8538, 8539	SEA	15.25	10.59	42	5	3	9.25	41	0.5	5.06	22.31	111
4	8538	SFA	16	10.53	52.5	5	3	10	51.5	0.5	4.19	22.97	170
	8539	SFA	16	10.53	52.5	5	3	10	51.5	0.5	5.19	22.97	170
5	8538	SGA	20	13.72	78	9.25	4	12	77	0.5	7.78	29.41	—
	8539	SGA	20	13.72	66	5	4	12	65	0.5	7.78	27.41	440
6[2]	8538, 8539	SHA	36	17	90	5	—	—	—	—	—	47.38	—

[1] For Class 8538 Size 3 devices with 200 A fuse clips, use the dimensions for Class 8538 Size 4 devices.
[2] Size 6 enclosures are floor mounting.

Oversize Enclosures

Table 24: NEMA 1, 4, 4X Stainless, and 12 Oversize Enclosures—See Figure 4

NEMA Size	NEMA Enclosure	Dimensions, in.					
		Wide	High	Deep	Handle	Mounting	
		A	B	C	L	D	E
0–2	1	15	28.75	9.59	3.25	11.63	26.25
	4	15	30.03	9.59	3.25	10	29.75
	12	15	31	10.97	3.25	9	30.25

Figure 3: NEMA 12/3R Enclosure

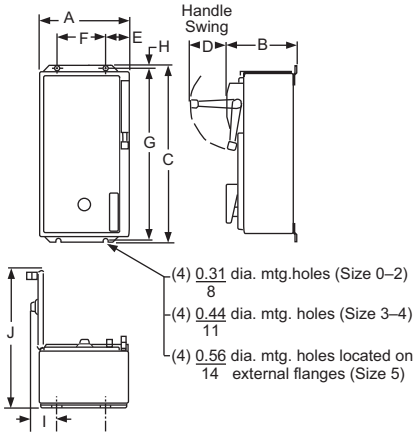

Figure 4: Class 8538 and 8539 In Oversize Enclosures— NEMA 1, 4 & 4X Stainless, 12/3R

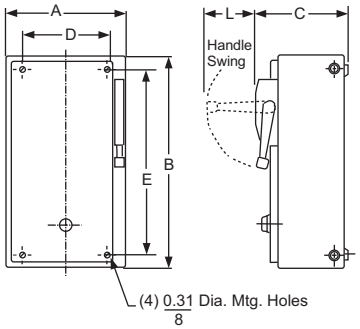

© 1998–2017 Schneider Electric
All Rights Reserved

NEMA 4, 4X Enclosures (for oversize enclosures, see page 19)

Figure 5:
NEMA 4X Polyester Enclosure

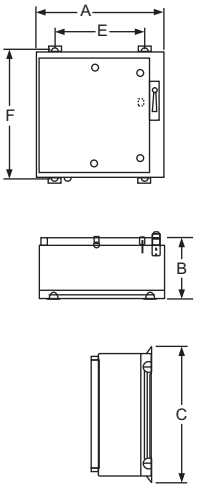

Table 25: NEMA 4X Polyester Enclosure (see Figure 5)

NEMA Size	Class	Type	Dimensions, in. [1] A	B	C	E	F
0–1	8538	SBW SCW SDW	13.72	11.4	26.94	6.25	25.75
0–1	8539						
0–2	8738, 8739	SBW SCW SDW	25.25	11.4	27.00	17.88	25.75
2	8538, 8539						
3–4	8538, 8738 8539, 8739	SEW SFW [2]	26.31	11.4	33.50	18.50	32.25

[1] Dimensions include space for Form **FF4T** (standard control transformer) and Form **FF4T10** (50 VA additional capacity). An oversize enclosure may be required for other control transformers.

[2] 8539 Size 4 only.

Table 26: Information on Hubs

Hubs are furnished with each NEMA 4X combination starter as shown in this table. Note that hubs are only installed in stainless steel enclosures; they are not installed in polyester enclosures.

NEMA Size	Hub Size, Quantity = 1	Hub Size, Quantity = 2
0–1	0.75 in.	1.00 in.
2	0.75 in.	1.50 in.
3–4	0.75 in.	2.50 in.

Figure 6:
NEMA 4 & 4X Stainless Steel Enclosure

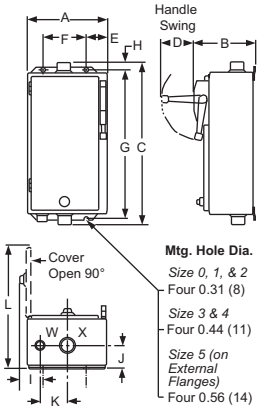

Dim: in. (mm)

Table 27: NEMA 4 and 4X Stainless Steel Enclosure (see Figure 6)

NEMA Size	Class	Type	Dimensions, in.[1] A	B	C	D	E	F	G	H	I	J	K	L	Bottom W (Hub)	Top & Bottom X (Hub)	Wt. (lb)
0–1	8538	SBW SCW	9.5	8.34	24.06	3.25	2.5	4.5	23.5	0.59	3.03	1.31	2.31	14.28	0.75	1	40
	8539		9.5	9.84	24.06	3.25	2.5	4.5	23.5	0.59	3.03	1.31	2.31	14.28	0.75	1	40
2	8538, 8539	SDW	10.5	9.59	27.75	3.25	2.5	5.5	27	0.59	3	2	2.63	16.53	0.75	1.5	55
3[2]	8538, 8539	SEW	15.25	10.59	42	5	3.19	10.25	40.5	0.59	3	2.56	3.19	22.19	0.75	2.5	111
4	8538	SFW	16	10.53	52.5	5	3.56	11	51	0.59	3	2.56	3.19	22.47	0.75	2.5	158
	8539	SFW	16	10.53	52.5	3.25	2.5	11	51	0.59	3	2.56	3.19	22.47	0.75	2.5	120
5	8538	SGW	20	13.72	78	9.25	4	12	77	0.56	4.5	3	3.5	29.41	0.75	3.5	—
	8539	SGW	20	13.72	66	5	4	12	65	0.56	4.5	3	3.5	29.41	0.75	3.5	440
6[3]	8538, 8539	SHW	36	17	90	—	—	—	—	—	—	—	—	47.88	—	—	—

[1] Dimensions include space for Form **FF4T** (standard control transformer). An oversize enclosure may be required for Form **FF4T11** (100 VA additional capacity) and Form **FF4T12** (200 VA additional capacity).

[2] For Class 8538 Size 3 devices with 200 A fuse clips, use the dimensions for Class 8538 Size 4 devices.

[3] Size 6 enclosures are floor mounting.

Table 28: Conduit Sizes, Locations A, B, C, and D

NEMA Size	Standard
0–1	1.25
2	1.5
3–4	2.5
5	4

© 1998–2017 Schneider Electric
All Rights Reserved

Type FG2P

Fractional Horsepower Manual Starters with Melting Alloy Thermal Overload Relay—Type F

Application Data

Type F fractional horsepower starters provide overload protection as well as manual On-Off control for small motors in a variety of industrial and commercial installations. Typical applications include fans, conveyors, pumps, and small machine tools.

Both one-pole and two-pole versions are suitable for use with AC single-phase motors rated up to 1 hp. Two-pole starters can also be used with DC motors rated up to 0.75 hp.

Table 1: Electrical Ratings

Voltage Rating	277 Vac maximum (1 or 2 pole) 230 Vdc maximum (2 pole only)
Continuous Current Rating	16 A

Table 2: Horsepower Ratings

Volts	Maximum Horsepower		
	AC Single Phase		DC
	1 Pole	2 Pole	2 Pole Only
115	1	1	0.75
230	1	2	0.75
277	1	1	—

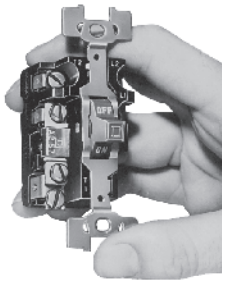

Type FO2

Enclosures: NEMA 1 surface mounting enclosures are sheet steel with a thermoplastic wrap-around cover for convenience in wiring. The NEMA 1 enclosure is also available in an oversized version that allows more space for wiring. A zinc alloy die casting is used for NEMA 4 enclosures, and a cast aluminum enclosure is offered for NEMA 3R, 7 & 9 applications.

Pilot Light: Red or green pilot light units are available factory installed in NEMA 1 surface- and flush-mounting enclosures and in NEMA 4 enclosures. They are also available as a field modification kit for NEMA 1 enclosures and gray flush plates.

For a red pilot light, use the order number as is. For a green pilot light, add a **G** to the number.

Handle Guard/Lock-Off: An optional handle guard on NEMA 1 enclosed starters prevents accidental operation of the toggle operator and allows the toggle operator to be padlocked in either the On or Off position.

The handle guard can be factory installed on NEMA 1 enclosed starters. It is also available in kit form for field installation on NEMA 1 surface- and flush-mounting enclosures. Standard NEMA 4 and NEMA 3R, 7 & 9 enclosures include provision for locking in the Off position.

Terminals: Binder head screw-type terminals are suitable for 10 AWG or smaller copper wire, and are accessible from the front. All terminals are clearly marked.

Mounting: Open types without a pilot light fit standard single-gang switch boxes, and can be used with any cover plate having a standard toggle cutout. Single-unit flush mounting types, including those with a pilot light, are suitable for wall mounting in a standard switch box or for machine cavity mounting without a box.

Operator: Available with toggle handle or with removable key-type operator to discourage unauthorized operation.

Thermal Units: Starters will not operate without a properly installed thermal unit. Install the thermal unit so that the markings face the front of the starter.

Emergency Off Actuator: A toggle operator extender is available for NEMA 1 surface-mounted units. The extender has a red vinyl button that provides a fast and easy method for locating and switching the device's toggle operator into the Off position. The Emergency Off Actuator is available in kit form only for field installation.

© 1997–2016 Schneider Electric
All Rights Reserved

Table 3: Approvals

	Enclosed Unit	Open Unit	Explosion-Proof Unit
	File E42243 CCN NLRV	—	File E58760 CCN NPXZ
	File LR25490 Class 3211 05	File LR25490 Class 3211 05	File LR26817 Class 3218 04
	—	File E42243 CCN NLRV2	—

Figure 1: Typical Wiring Diagrams

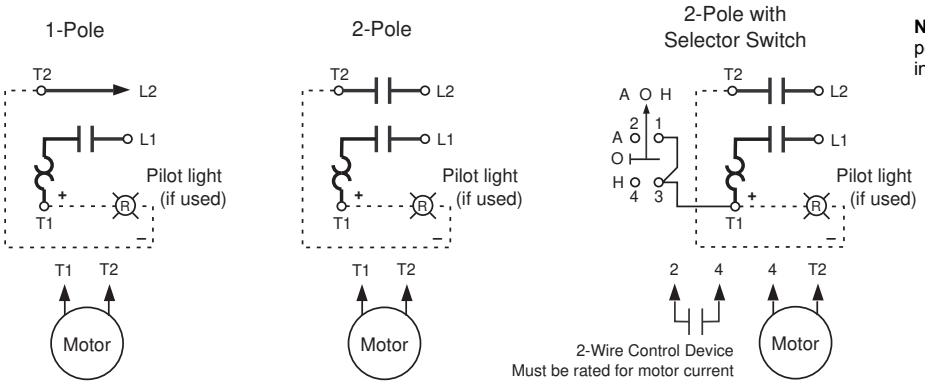

NOTE: The lamp is polarity sensitive in DC applications.

Table 4: Single-Unit Types (Class 2510)

Operator Style	No.of Poles	Features	NEMA 1 General Purpose Enclosure Surface Mounting		General Purpose Flush Mounting (Without Pull Box) Flush Plate			NEMA Type 4 [1] Watertight and Dusttight Enclosure	NEMA 3R, 7 & 9 [1] Enclosure Class I Groups B, C, and D Class II Groups E, F and G	Open Type	Number of Thermal Units Required
			Standard	Oversized	Gray	Standard Stainless Steel	Jumbo Stainless Steel				
Basic Starter – Class 2510											
Toggle	1	Standard	FG1	FGJ1	FF1	FS1	—	—	—	FO1	1
		With Red Pilot Light [2]	FG1P	FGJ1P	FF1P	FS1P	FSJ1P	—	—	FO1P	1
	2	Standard	FG2	FGJ2	FF2	FS2	—	—	—	FO2	1
		With Red Pilot Light [2]	FG2P	FGJ2P	FF2P	FS2P	FSJ2P	—	—	FO2P	1
Key	1	Standard	FG3	FGJ3	FF3	FS3	—	—	—	FO3	1
		With Red Pilot Light [2]	FG3P	FGJ3P	FF3P	FS3P	FSJ3P	—	—	FO3P	1
	2	Standard	FG4	FGJ4	FF4	FS4	—	—	—	FO4	1
		With Red Pilot Light [2]	FG4P	FGJ4P	FF4P	FS4P	FSJ4P	—	—	FO4P	1
Starter with Handle Guard / Lock-Off – Class 2510											
Toggle	1	Standard	FG5	FGJ5	Order basic starter plus separate handle guard kit.			FW1	FR1	FO1 [3]	1
		With Red Pilot Light [2]	FG5P	FGJ5P				FW1P	—	FO1P [3]	1
	2	Standard	FG6	FGJ6				FW2	FR2	FO2 [3]	1
		With Red Pilot Light [2]	FG6P	FGJ6P				FW2P	—	FO2P [3]	1

[1] Furnished with one 3/4" pipe tap in the bottom (reversible for top feed). To obtain a 3/4" pipe tap top and bottom, add suffix letter **H** to the Type number.

[2] For a green pilot light, add the letter **G** to the catalog number(for example, **2510FGJ2PG**).

[3] When replacing a starter equipped with a pilot light in a NEMA 4 enclosure, retain the pilot light mounting bracket from the original device.

© 1997–2016 Schneider Electric
All Rights Reserved

Type KG1A

Manual Switches—Type K Reversing, Non-Reversing, Two Speed

Application Data

Type K motor starting switches provide manual On-Off control of single- or three-phase AC motors, where overload protection is not required or is provided separately. These devices are suitable for use with three-phase AC motors rated up to 20 hp. Compact construction and a 600 V rating make these switches suitable for a wide range of industrial and commercial uses. Typical applications include small machine tools, pumps, fans, conveyors, and many other types of electrical machinery. They can also be used on non-motor loads such as resistance heaters.

Table 7: Electrical Ratings

Voltage Rating	600 Vac maximum 230 Vdc maximum
Continuous Current Rating	30 A at 600 Vac maximum (20 A at 600 Vac maximum for NEMA 3R and 7 & 9 enclosed) 30 A at 24 Vdc maximum

Table 8: Horsepower Ratings

Class	Type	No. of Poles	Motor Type	Maximum Horsepower				DC Rating		
				115 V	230V	460 V	575 V	90 V	115 V	230V
2510	KO1, KO3	2	1-Phase	2	2	3	3	1	2	1.5
	KO2, KO4	3	3-Phase	2	7.5	10	10	1	2	1.5
	KO5	2	1-Phase	2	3	7.5	10	1	2	1.5
	KO6	3	3-Phase	2	7.5	15	20	1	2	1.5
2511	All	2	1-Phase	2	2	3	3	1	2	1.5
		3	3-Phase	2	7.5	10	10	1	2	1.5
2512	All	2	1-Phase	2	2	3	3	1	2	1.5
		3	3-Phase Constant or Variable Torque	2	7.5	10	10	1	2	1.5
		3	3-Phase Constant Horsepower	2	7.5	10	10	1	2	1.5

Type KO2

Enclosures: NEMA 1 surface-mounting enclosures are sheet steel with a thermoplastic wrap-around cover for convenience in wiring. The NEMA 1 enclosure is also available in jumbo and oversized versions that allow more space for wiring. A zinc alloy die casting is used for NEMA 4 enclosures, and a cast aluminum enclosure is offered for NEMA 3R and 7 & 9 applications.

Mounting: Open types without a pilot light fit standard single-gang switch boxes, and can be used with any cover plate having a standard toggle cutout. Single-unit flush-mounting types, including those with pilot light, are suitable for wall mounting in a standard switch box or for machine cavity mounting without a box. For difficult wall surfaces, such as concrete block or tile, a jumbo size flush plate is recommended. See the dimensional drawings for additional details and mounting provisions of enclosed types.

Pilot Light: Red or green pilot light units are available factory installed in NEMA 1 surface- and flush-mounting enclosures and in NEMA 4 enclosures. They are also available as a field modification kit for NEMA 1 enclosures and gray flush plates.

For a red pilot light, use the order number as is. For a green pilot light, add a **G** to the number.

Operator: Available with a toggle handle or with a removable key-type operator to discourage unauthorized operation.

Emergency Off Actuator: A toggle operator extender is available for NEMA 1 surface-mounting units. The extender has a red vinyl button that provides a fast and easy method for locating and switching the device's toggle operator into the Off position. The Emergency Off actuator is available in kit form only for field installation.

© 1997–2016 Schneider Electric
All Rights Reserved

Table 9: Approvals

	Enclosed Unit	Open Unit	Explosion-Proof Unit
	File E42243 CCN NLRV	—	File E58760 CCN NPXZ
	File LR25490 Class 3211 05	File LR25490 Class 3211 05	File LR26817 Class 3218 04
	—	File E42243 CCN NLRV2	—

Figure 2: Typical Wiring Diagrams

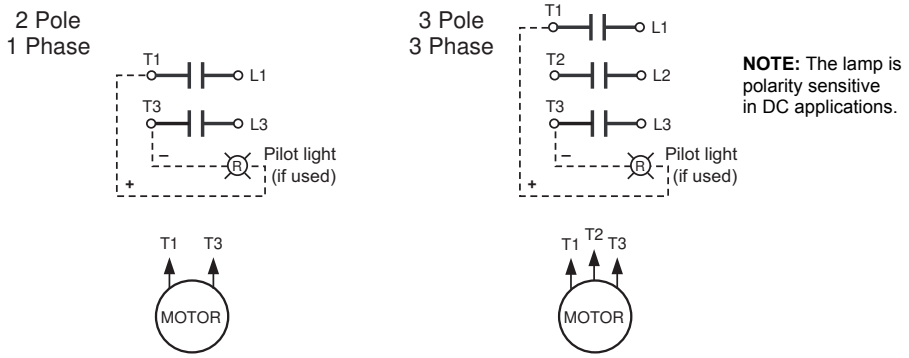

Table 10: Non-Reversing (Class 2510)

Operator Style	No. of Poles	Features	NEMA 1 Enclosure: General Purpose, Surface Mounting: Standard	NEMA 1 Enclosure: General Purpose, Surface Mounting: Oversized	NEMA 1 Enclosure: General Purpose, Flush Mounting (Without Pull Box), Flush Plate: Gray	NEMA 1 Enclosure: General Purpose, Flush Mounting (Without Pull Box), Flush Plate: Standard Stainless Steel	NEMA 1 Enclosure: General Purpose, Flush Mounting (Without Pull Box), Flush Plate: Jumbo Stainless Steel	NEMA 4 [1] Enclosure Watertight and Dusttight	NEMA 3R, 7 & 9 [1] Enclosure Class I Groups B, C and D Class II Groups E, F, and G	Open Type
Toggle	2	Standard	KG1	KGJ1	KF1	KS1	—	KW1	KR1	KO1
		With Pilot Light [2] 115 Vac 230 Vac	KG1A KG1B	KGJ1A KGJ1B	KF1A KF1B	KS1A KS1B	KSJ1A KSJ1B	KW1A KW1B	— —	KO1A [3] KO1B [3]
	3	Standard	KG2	KGJ2	KF2	KS2	—	KW2	KR2	KO2
		With Pilot Light [2] 208–277 Vac 440–600 Vac	KG2B KG2C	KGJ2B KGJ2C	KF2B KF2C	KS2B KS2C	KSJ2B KSJ2C	KW2B KW2C	— —	KO2B [3] KO2C [3]
	2	Standard	KG5	KGJ5	—	—	—	KW5	—	KO5
		With Pilot Light [2] 115 Vac 230 Vac	KG5A KG5B	— —	— —	— —	— —	KW5A KW5B	— —	KO5A KO5B
	3	Standard	KG6	KGJ6	—	—	—	KW6	—	KO6
		With Pilot Light [2] 208–277 Vac 440–600 Vac	KG6B KG6C	— —	— —	— —	— —	KW6B KW6C	— —	KO6B KO6C
Key	2	Standard	KG3	KGJ3	KF3	KS3	—	—	—	KO3
		With Pilot Light [2] 115 Vac 230 Vac	KG3A KG3B	KGJ3A KGJ3B	KF3A KF3B	KS3A KS3B	KSJ3A KSJ3B	— —	— —	KO3A KO3B
	3	Standard	KG4	KGJ4	KF4	KS4	—	—	—	KO4
		With Pilot Light [2] 208–277 Vac 440–600 Vac	KG4B KG4C	KGJ4B KGJ4C	KF4B KF4C	KS4B KS4C	KSJ4B KSJ4C	— —	— —	KO4B KO4C

[1] Furnished with one 3/4" pipe tap in the bottom (reversible for top feed). For a 3/4" pipe tap on the top and bottom, add suffix **H** to the Type number.

[2] For a green pilot light, add the letter **G** to the catalog number (for example, **2510KG2BG**).

[3] Do not use as replacement interiors for NEMA 4 devices. For a replacement unit, order Type **KO1** or **KO2** and a separate pilot light kit. (Be sure to retain the pilot light mounting bracket from the original device.)

© 1997–2016 Schneider Electric
All Rights Reserved

Approximate Dimensions, Types F and K

Figure 3: Type F Fractional Horsepower, Open Type
Dimensions are typical for key operator devices.

Type FO2

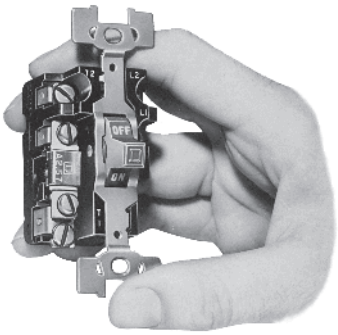

Types FO1, 1P, 2 Fractional Hp Starter

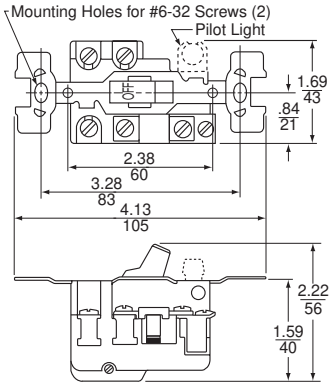

Figure 4: Type K Motor Starting Switch, Open Type
Dimensions are typical for key operator devices.

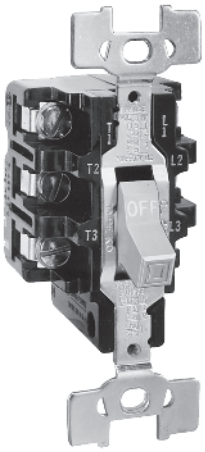

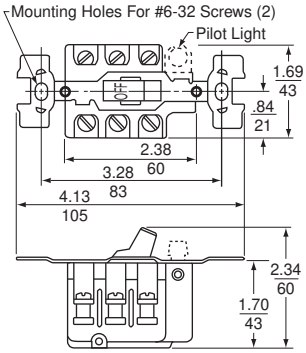

Figure 5: Dimensions for NEMA 1 General Purpose, Surface-Mounting Enclosures Standard Size

Type FG2P

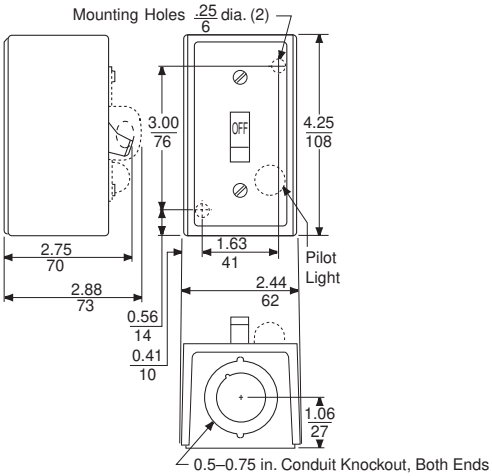

© 1997–2016 Schneider Electric
All Rights Reserved

THIS PAGE LEFT INTENTIONALLY BLANK

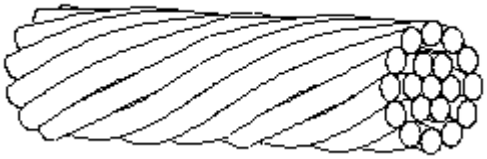

4/0-19
19 Strand 4/0 AWG Concentric Soft-Drawn Bare Copper

DESCRIPTION

- Weighs 653 pounds per 1000 feet
- Cross-sectional area equal to 211,600 circular mils
- Conductor diameter = 0.528”
- Meets the requirements of ASTM B3 and B787

APPLICATIONS

- For use as grounding conductor

301 Ziegler Drive, Grayslake, IL 60030
847-548-8700 • 800-842-7437 • Fax: 847-548-8755
Web-site: www.harger.com • E-mail: hargersales@harger.com

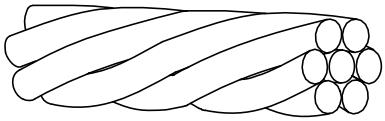

4/0-7
7 Strand 4/0 AWG Concentric Soft-Drawn Bare Copper

DESCRIPTION

- Weighs 653 pounds per 1000 feet.
- Cross-sectional area equal to 211,600 circular mils.
- Conductor diameter = 0.528”
- Meets the requirements of ASTM B3 and B8

APPLICATIONS

- For use as grounding conductor.

301 Ziegler Drive, Grayslake, IL 60030
847-548-8700 • 800-842-7437 • Fax: 847-548-8755
Web-site: www.harger.com • E-mail: hargersales@harger.com

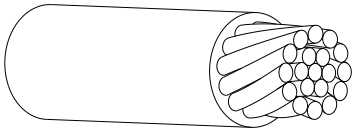

#2-19G
Green Insulated Conductor

APPLICATION

- Type THHN Building Wire is intended for general purpose applications and may be installed in conduit, duct, or other recognized raceways in wet (60°C oil/90°C water) or dry (105°C) locations.
- For both new work and rewiring applications, the smaller diameter of the wire permits additional circuits or larger conductors to be installed in the conduit without exceeding maximum fill limitations.
- The insulation is a high quality, heat and moisture resistant polyvinyl chloride compound over which a heat and light stabilized nylon jacket is tightly applied.

STANDARDS

- Underwriters' Laboratories UL 83
- Federal Specification JC-30A
- Gasoline and Oil Resistant II (UL)

SPECIFICATIONS

- Sunlight Resistance
- VW-1 Flame Resistant
- Lead Free-ROHS Compliant
- 600V

Size AWG	Number of Strands	Insulation Thickness in Mils PVC	Insulation Thickness in Mils Nylon	Approx. O.D. Inches	Ampacity (1) 75°C	Ampacity (1) 90°C	Approx. Wgt. per 1000' in Lbs.
2	19	40	6	.40	115	130	240

(1) Based on not more than 3 conductors in Raceway or cable or direct burial (30°C, 86°F Ambient) per NEC. 75°C conductor temperature rating.

301 Ziegler Drive, Grayslake, IL 60030
847-548-8700 • 800-842-7437 • Fax: 847-548-8755
Web-site: www.harger.com • E-mail: hargersales@harger.com

THIS PAGE LEFT INTENTIONALLY BLANK

Bonding & Grounding Mechanical Connectors

LINE CARD

HARGER®
Grounding • Exothermic • Lightning Protection

Mechanical Bonding Clamps

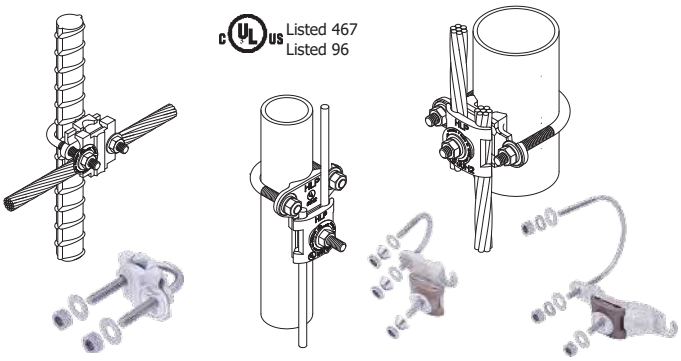

Listed 467
Listed 96

CPC Pipe Clamps

Part No.	Material	Nom. Pipe Size Range	Pipe Outside Diameter
CPC.5/.75	ETPB*	.5″ - .75″	.375″ - 1″
CPC1/1.25	ETPB*	1″ - 1.25″	0.9375″ - 1.7″
CPC1.5/2	ETPB*	1.5″ - 2″	1.25″ - 2.4″
CPC2.5/3	ETPB*	2.5″ - 3″	2.5″ - 3.5″
CPC3.5/4	ETPB*	3.5″ - 4″	3.375″ - 4.5″
CPC5/6	ETPB*	5″ - 6″	4.75″ - 6.63″

- Conductor range #6 AWG solid through 250 MCM.
- Features "quick connect", bi-directional design.
- Pressed stud ensures a flush mounting surface.
- Silicon Bronze hardware available.
- Suitable for direct burial in earth & concrete.
- Available in Tamper Proof.

* Electro Tinned Plated Bronze

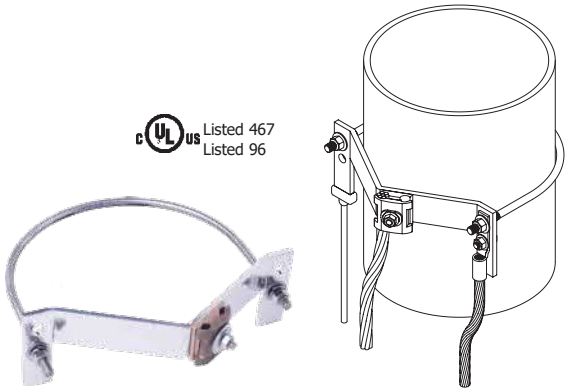

Listed 467
Listed 96

UPC Pipe Clamps

Part No.	Material	Nom. Pipe Size
UPC8C	Tinned Copper	8″
UPC10C	Tinned Copper	10″
UPC12C	Tinned Copper	12″

- Provides bi-directional grounding capabilities.
- Mechanical connector to connect ground conductors #6 AWG thru 250 MCM.
- Suitable for direct burial in earth & concrete.
- Available in Tamper Proof.

Some of the connectors on this line card are available with Tamper Proof Hardware.

Cable to Cable Bonding Connectors

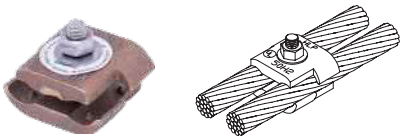

Listed 467
Listed 96

1 Bolt Parallel Connectors

Part No.	Material	Conductor Range
B1BC	Copper	#6 AWG - 250 MCM
TB1BC	ETPB*	#6 AWG - 250 MCM

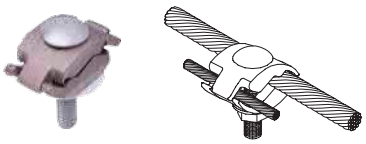

Listed 467
Listed 96

1 Bolt Bonding Connectors

Part No.	Material	Conductor Range
208	Copper	#6 AWG - 4/0
208T	ETPB*	#6 AWG - 4/0

Listed 467
Listed 96

2 Bolt Parallel Connectors

Part No.	Material	Conductor Range
204	Copper	#6 AWG - 250 MCM
204T	ETPB*	#6 AWG - 250 MCM

NOTES:
- Manufactured from high conductivity copper alloy.
- Suitable for direct burial in earth & concrete.
- Available in Tamper Proof.

*ETPB - Electro Tin Plated Bronze.

Cable to Flat Surface Connectors

c UL us Listed 467
Listed 96

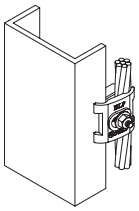

Cable to Flat Metal Connectors

Part No.	Material	Conductor Range
213	Copper	#6 AWG - 250 MCM
213T	ETPB*	#6 AWG - 250 MCM

c UL us Listed 467
Listed 96

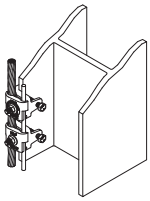

Flange Bonding Clamps

Part No.	Material	Conductor Range
223	Copper	#6 AWG - 500 MCM
223T	ETPB*	#6 AWG - 500 MCM

c UL us Listed 467
Listed 96

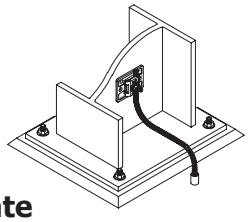

Bonding Plate

Part No.	Material	Conductor Range
217	ETPB*	#6 AWG - 4/0

c UL us Listed 467
Listed 96

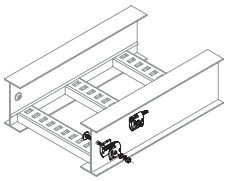

Tinned Bronze Cable Tray Clamp

Part No.	Material	Conductor Range
TBCTC	ETPB*	#6 Solid AWG - 250 MCM

- Used for bonding galvanized steel or aluminum cable trays to the grounding electrode system.

c UL us Listed 467

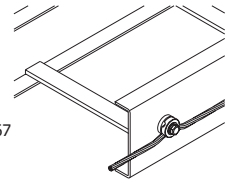

Tin Plated Cable Tray Clamp

Part No.	Material	Conductor Size
CRGC6	ETPB*	#6 AWG
CRGC4	ETPB*	#4 AWG

- Used when welded connections are not feasible.
- Unique design allows clamps to form connections at most any angle.
- Specific uses include fabrication under an existing computer room floor.

NOTES:
- Manufactured from high conductivity copper alloy.
- Suitable for direct burial in earth & concrete.
- Available in Tamper Proof.

*ETPB - Electro Tin Plated Bronze.

Fence Fabric Bonding Clamps

Fence Fabric Clamps

Part No.	Material	Conductor Size
FGC8	ETPB*	#8 AWG
FGC6	ETPB*	#6 AWG
FGC4	ETPB*	#4 AWG
FGC2	ETPB*	#2 AWG
FGC2/0	ETPB*	2/0 AWG
FGC2-4/0**	ETPB*	#2 AWG & 4/0 AWG

**Accepts a #2 AWG and/or 4/0 AWG conductor.
- Unique design allows clamp to form connections at most any angle.
- The conductor maintains a direct path to ground while connected to an object that is parallel, perpendicular or in any degree in between.
- Allows for use with most metallic surfaces including galvanized.
- Available in Tamper Proof.

* Electro Tin Plated Brass

c UL us Listed 467

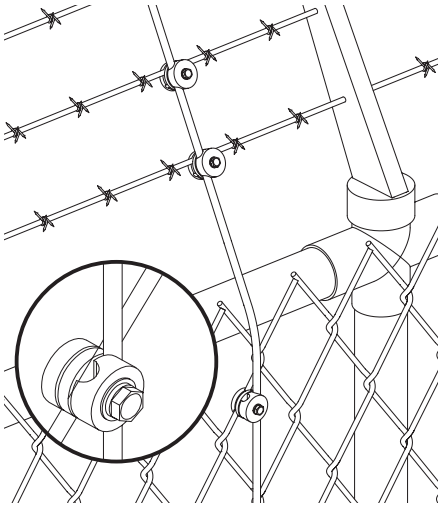

Bonding Jumpers

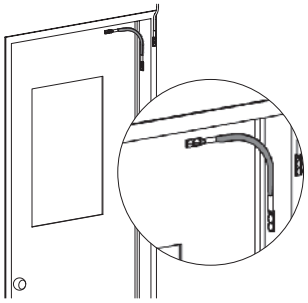

Door Jumpers

Part No.	Material	Braid Width	Braid Thickness	Length	Hardware Size
GS12094122A1/4	Tinned Flat Braid Copper	1/2″	.094″	12″	1/4″
GS12094182A1/4	Tinned Flat Braid Copper	1/2″	.094″	18″	1/4″

- Braid is 6 gauge equivalent.
- Spacing between bolt holes is 5/8″ on center.
- 2 holes per side.
- Dimensions are nominal size.

c UL us Listed 467

One Hole Bonding Jumpers & Kits

Part No.	Kit	Conductor Type	Length	No. of Holes Per Side	Hardware Size
GJ67G1211/4	No	67G	12"	1	1/4"
GJ67G1211/4KIT	Yes	67G	12″	1	1/4″
GJ67G1811/4	No	67G	18"	1	1/4"
GJ67G1811/4KIT	Yes	67G	18″	1	1/4″

- #6 AWG x 7 Strand Green THW insulation.
- Kit includes all necessary hardware.

Lay-In Lugs

UL Listed 467

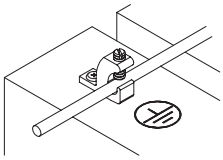

UL Listed 486

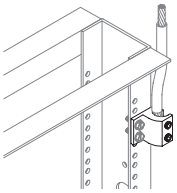

One-Hole Tinned Copper Lay-In Lug

Part No.	TCLI414DB
Size	1-1/8″ x 3/8″ x 7/8″
Material	Electro Tin Plated Copper
Accepts Conductors	#4 AWG to #14 AWG
Includes	Slotted Stainless Steel Set Screw
Application	PV Array Frame or Pool Grounding
Features	Corrosion Resistant, UL467 Listed

- Tongue accepts #10 screw.

Two-Hole Aluminum Lay-In Lug

Part No.	LI2/0142
Size	1-5/8″ x 1-1/2″
Material	Electro Tin Plated Aluminum (6061-T6)
Accepts Conductors	2/0 to #14 AWG
Includes	(2) 3/8″ x 1″ Hex Head Socket Set Screws
Requires	3/16″ Hex Key (not included)
Application	Rack or cabinet grounding
Features	Dual Rated AL/CU, UL486 Listed

- Meets ANSI/TIA-607-C two-hole mounting recommendations.
- Parallel mounting direction allows for better cable management.
- Mounting holes for 1/4″ or #12 hardware.

Round Member Grounding Clamps

c UL us Listed 467

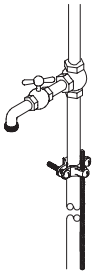

Pipe Ground Clamps

Part No.	Ground Rod or Pipe Size	Conductor Range
BGC4	1/2" - 1"	#10 - #2 AWG
BGC41.25-2	1-1/4" - 2"	#10 - #2 AWG
BGC42.5-4	2-1/2" - 4"	#10 - #2 AWG

- Meets NFPA 54 requirements for bonding to stainless steel gas piping.

c UL us Listed 467

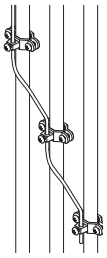

Conduit Bonding Clamps

Part No.	Material	Conduit Range	Conductor Range
BGC4SCS	Bronze	1/2" - 3/4"	#10 - #2 AWG
TBGC4SCS	ETPB*	1/2" - 3/4"	#10 - #2 AWG
TBGC4SCSSS**	ETPB*	1/2" - 3/4"	#10 - #2 AWG

*ETPB - Electro Tin Plated Bronze.
**Includes stainless steel hardware. Rated for direct burial.

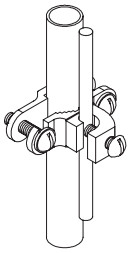

RB12A

c UL us Listed 467

Reinforcing Steel & Water Pipe Clamps

Part No.	Reinforcing Steel Range	Pipe Range	Conductor Range
RB12A	3/8" - 1"	1/2" x 1"	10 Sol. - 2 Str.
RB12B	3/8" - 1"	1/2" x 1"	10 Sol. - 2 Str.

- Suitable for direct burial in earth & concrete.
- RB12A is for parallel mounted conductors.
- RB12B is for perpendicular mounted conductors.
- UL Listed

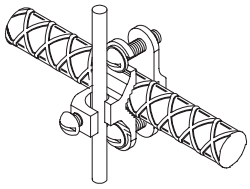

RB12B

c UL us Listed 467

Copper Bonding Terminal Lugs

UL Listed 486

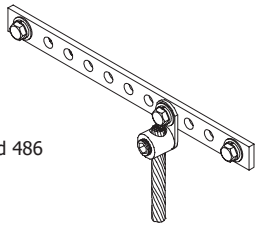

Copper Terminal Lugs

Part No.	Conductor Range		Hardware Size	Ampere Rating
	Max.	Min.		
GEL1	8 Str.	14 Sol.	#8	35
GEL2	4 Str.	14 Sol.	1/4″	70
GEL3	1/0 Str.	8 Sol.	5/16″	125
GEL4	250 MCM	6 Sol.	3/8″	250

UL Listed 486

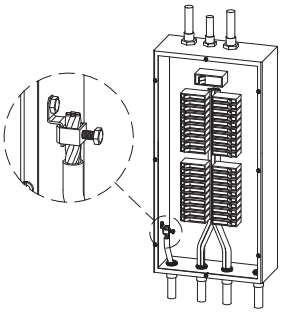

Copper Offset Terminal Lugs

Part No.	Conductor Range		Hardware Size	Ampere Rating
	Max.	Min.		
GEOL1	10 Str.	14 Str.	#8	25
GEOL2	6 Str.	14 Str.	#8	50
GEOL3	2 Str.	8 Str.	1/4″	70
GEOL4	1/0 Str.	8 Str.	1/4″	125
GEOL5	4/0 Str.	2 Str.	3/8″	225
GEOL500MCM	500 MCM	1/0 Str.	1/2″	400

HARGER

Harger Lightning & Grounding
301 Ziegler Drive • Grayslake, IL 60030
Phone: 800-842-7437 • 847-548-8700
Website: www.harger.com • Email: hargersales@harger.com

MADE IN THE USA

ULTRAWELD®

Exothermic Connections

HARGER®

Grounding • Exothermic • Lightning Protection

LINE CARD

Cable to Cable Connections

c UL us Listed 467

(Parallel Thru Splice of Horizontal Cables, Tap Conductor Over Run)

PT Connection Type

Cable Size		Mold Part No.	Weld Metal	
Run	Tap		UltraShot	NUWTUBE
#2 Sol	#2 Sol	PT-2S2S**B**	US65	NUWTUBE65
#2	#6	PT-26**B**	US45	NUWTUBE45
	#4	PT-24**B**	US65	NUWTUBE65
	#2	PT-22**B**	US65	NUWTUBE65
1/0	#2	PT-1/02**B**	US65	NUWTUBE65
	1/0	PT-1/01/0**B**	US90	NUWTUBE90
2/0	#2	PT-2/02**B**	US90	NUWTUBE90
	1/0	PT-2/01/0**B**	US115	NUWTUBE115
	2/0	PT-2/02/0**B**	US115	NUWTUBE115
4/0	#4	PT-4/04**B**	US150	NUWTUBE150
	#2	PT-4/02**B**	US150	NUWTUBE150
	1/0	PT-4/01/0**B**	US150	NUWTUBE150
	2/0	PT-4/02/0**B**	US150	NUWTUBE150
	3/0	PT-4/03/0**B**	US200	NUWTUBE200
	4/0	PT-4/04/0**B**	US200	NUWTUBE200

c UL us Listed 467

(Cross of Horizontal Cables, Lapped & Not Cut)

XO Connection Type

Cable Size		Mold Part No.	Weld Metal	
Run	Tap		UltraShot	NUWTUBE
2/0	#2	XO-2/02**Q**	US150	NUWTUBE150
	1/0	XO-2/01/0**Q**	US200	NUWTUBE200
	2/0	XO-2/02/0**Q**	US200	NUWTUBE200
4/0	#2	XO-4/02**I**	US150	NUWTUBE150
	1/0	XO-4/01/0**I**	US200	NUWTUBE200
	2/0	XO-4/02/0**I**	US200	NUWTUBE200
	3/0	XO-4/03/0**I**	US250	NUWTUBE250
	4/0	XO-4/04/0**I**	US250	NUWTUBE250
250 MCM	250 MCM	XO-25CM25CM**I**	US300	2-NUWTUBE150

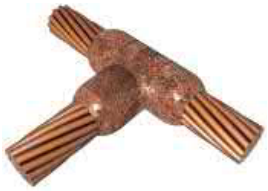

c UL us Listed 467

(Tee of Horizontal Run & Tap Cables)

RT Connection Type

Cable Size		Mold Part No.	Weld Metal	
Run	Tap		UltraShot	NUWTUBE
#2 Sol	#2 Sol	RT-2S2S**B**	US45	NUWTUBE45
#2	#2	RT-22**B**	US45	NUWTUBE45
1/0	#2	RT-1/02**B**	US45	NUWTUBE45
	1/0	RT-1/01/0**B**	US90	NUWTUBE90
2/0	#2	RT-2/02**B**	US45	NUWTUBE45
	1/0	RT-2/01/0**B**	US90	NUWTUBE90
	2/0	RT-2/02/0**B**	US90	NUWTUBE90
3/0	#2	RT-3/02**B**	US45	NUWTUBE45
	1/0	RT-3/01/0**B**	US90	NUWTUBE90
	2/0	RT-3/02/0**B**	US90	NUWTUBE90
	3/0	RT-3/03/0**B**	US115	NUWTUBE115
4/0	#2	RT-4/02**I**	US90	NUWTUBE90
	1/0	RT-4/01/0**I**	US90	NUWTUBE90
	2/0	RT-4/02/0**I**	US90	NUWTUBE90
	3/0	RT-4/03/0**I**	US115	NUWTUBE115
	4/0	RT-4/04/0**I**	US150	NUWTUBE150

c UL us Listed 467

(Butt End Splice of Horizontal Cables)

BS Connection Type

Cable Size	Mold Part No.	Weld Metal	
		UltraShot	NUWTUBE
#6 Sol	BS-6S**L**	US25	NUWTUBE25
#4	BS-4**L**	US25	NUWTUBE25
#2	BS-2**L**	US32	NUWTUBE32
1/0	BS-1/0**B**	US45	NUWTUBE45
2/0	BS-2/0**B**	US65	NUWTUBE65
3/0	BS-3/0**B**	US90	NUWTUBE90
4/0	BS-4/0**B**	US90	NUWTUBE90
250 MCM	BS-25CM**B**	US115	NUWTUBE115

Handle Clamps Required:
MH1 for **B**, **K**, **P** & **Q** Price Key Molds
MH2 for **C** Price Key Molds
MH3 for GS Style **R** Price Key Molds
MH6 for **I** Price Key Molds

L & **M** Price Key Molds INCLUDE MH3 Handle
A Price Key Molds SOLD WITH FRAME

HARGER®

Ultraweld®

Cable to Cable Connections

c UL us Listed 467

(Parallel Tap of Horizontal Cables)

PB Connection Type

Cable Size		Mold Part No.	Weld Metal	
Run	Tap		UltraShot	NUWTUBE
#2 Sol	#2 Sol	PB-2S2S**B**	US65	NUWTUBE65
#2	#6	PB-26**B**	US32	NUWTUBE32
	#4	PB-24**B**	US45	NUWTUBE45
	#2	PB-22**B**	US65	NUWTUBE65
1/0	#6	PB-1/06**B**	US45	NUWTUBE45
	#4	PB-1/04**B**	US65	NUWTUBE65
	#2	PB-1/02**B**	US65	NUWTUBE65
	1/0	PB-1/01/0**B**	US90	NUWTUBE90
2/0	#6	PB-2/06**B**	US65	NUWTUBE65
	#4	PB-2/04**B**	US65	NUWTUBE65
	#2	PB-2/02**B**	US90	NUWTUBE90
	1/0	PB-2/01/0**B**	US115	NUWTUBE115
	2/0	PB-2/02/0**B**	US115	NUWTUBE115
4/0	#6	PB-4/06**B**	US90	NUWTUBE90
	#4	PB-4/04**B**	US90	NUWTUBE90
	#2	PB-4/02**B**	US115	NUWTUBE115
	1/0	PB-4/01/0**B**	US115	NUWTUBE115
	2/0	PB-4/02/0**B**	US115	NUWTUBE115
	4/0	PB-4/04/0**B**	US150	NUWTUBE150

(Parallel Thru Splice of Horizontal Cables)

PS Connection Type

Cable Size		Mold Part No.	Weld Metal	
Run	Tap		UltraShot	NUWTUBE
#8 Sol	#8 Sol	PS-8S8S**L**	US25	NUWTUBE25
#8	#8	PS-88**L**	US25	NUWTUBE25
#6 Sol	#6 Sol	PS-6S6S**L**	US25	NUWTUBE25
#6	#6	PS-66**L**	US25	NUWTUBE25
#4 Sol	#4 Sol	PS-4S4S**M**	US32	NUWTUBE32
#4	#4	PS-44**M**	US32	NUWTUBE32
#2 Sol	#2 Sol	PS-2S2S**M**	US45	NUWTUBE45

Cable to Ground Rod Connections

c UL us Listed 467

(Single Cable Dead Ended to Top of Ground Rod)

GD Connection Type

Ground Rod Size*	Cable Size	Mold Part No.	Weld Metal	
			UltraShot	NUWTUBE
5/8″	#2 Sol	GD-582S**B**	US65	NUWTUBE65
	#2	GD-582**B**	US65	NUWTUBE65
	1/0	GD-581/0**B**	US90	NUWTUBE90
	2/0	GD-582/0**B**	US90	NUWTUBE90
	3/0	GD-583/0**B**	US90	NUWTUBE90
	4/0	GD-584/0**B**	US90	NUWTUBE90
3/4″	#2 Sol	GD-342S**B**	US90	NUWTUBE90
	#2	GD-342**B**	US90	NUWTUBE90
	1/0	GD-341/0**B**	US90	NUWTUBE90
	2/0	GD-342/0**B**	US90	NUWTUBE90
	3/0	GD-343/0**B**	US90	NUWTUBE90
	4/0	GD-344/0**B**	US90	NUWTUBE90

*Copper-Clad ground rod nominal dimensions.

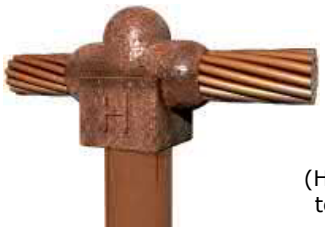

c UL us Listed 467

(Horizontal Thru Cable to Top of Ground Rod)

GO Connection Type

Ground Rod Size*	Cable Size	Mold Part No.	Weld Metal	
			UltraShot	NUWTUBE
5/8″	#2 Sol	GO-582S**B**	US90	NUWTUBE90
	#2	GO-582**B**	US90	NUWTUBE90
	1/0	GO-581/0**B**	US90	NUWTUBE90
	2/0	GO-582/0**B**	US115	NUWTUBE115
	3/0	GO-583/0**B**	US115	NUWTUBE115
	4/0	GO-584/0**B**	US115	NUWTUBE115
3/4″	#2 Sol	GO-342S**B**	US90	NUWTUBE90
	#2	GO-342**B**	US90	NUWTUBE90
	1/0	GO-341/0**B**	US115	NUWTUBE115
	2/0	GO-342/0**B**	US115	NUWTUBE115
	3/0	GO-343/0**B**	US115	NUWTUBE115
	4/0	GO-344/0**B**	US115	NUWTUBE115

*Copper-Clad ground rod nominal dimensions.

Cable to Ground Rod Connections

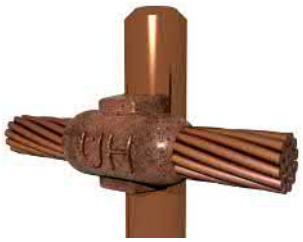

c UL us Listed 467

(Horizontal Thru Cable to Side of Ground Rod)

GS Connection Type

Ground Rod Size*	Cable Size	Mold Part No.	Weld Metal	
			UltraShot	NUWTUBE
5/8"	#2 Sol	GS-582S**R**	US65	NUWTUBE65
	#2	GS-582**R**	US65	NUWTUBE65
	1/0	GS-581/0**P**	US115	NUWTUBE115
	2/0	GS-582/0**P**	US115	NUWTUBE115
	3/0	GS-583/0**P**	US150	NUWTUBE150
	4/0	GS-584/0**P**	US150	NUWTUBE150
3/4"	#2 Sol	GS-342S**R**	US65	NUWTUBE65
	#2	GS-342**R**	US65	NUWTUBE65
	1/0	GS-341/0**P**	US115	NUWTUBE115
	2/0	GS-342/0**P**	US115	NUWTUBE115
	3/0	GS-343/0**P**	US150	NUWTUBE150
	4/0	GS-344/0**P**	US150	NUWTUBE150

*Copper-Clad ground rod nominal dimensions.

Cable to Steel Surface/Pipe Connections

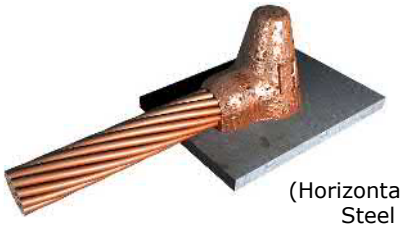

c UL us Listed 467

(Horizontal Cable to Horizontal Flat Steel Surface, ON Surface)

HD Connection Type

Cable Size	Mold Part No.	Weld Metal	
		UltraShot	NUWTUBE
#2 Sol	HD-2S**A**	US45	NUWTUBE45
#2	HD-2**A**	US45	NUWTUBE45
1/0	HD-1/0**B**	US90	NUWTUBE90
2/0	HD-2/0**B**	US90	NUWTUBE90
3/0	HD-3/0**B**	US115	NUWTUBE115
4/0	HD-4/0**B**	US115	NUWTUBE115
250 MCM	HD-25CM**B**	US115	NUWTUBE115

*For connections to pipe, please contact factory.

Cable to Steel Surface/Pipe Connections

c UL us Listed 467

(Cable Down at 45° to Vertical Flat Steel Surface)

VA Connection Type

Cable Size	Mold Part No.	Weld Metal	
		UltraShot	NUWTUBE
#2 Sol	VA-2S**B**	US45	NUWTUBE45
#2	VA-2**B**	US45	NUWTUBE45
1/0	VA-1/0**B**	US90	NUWTUBE90
2/0	VA-2/0**B**	US90	NUWTUBE90
3/0	VA-3/0**B**	US115	NUWTUBE115
4/0	VA-4/0**B**	US115	NUWTUBE115
250 MCM	VA-25CM**B**	US115	NUWTUBE115

c UL us Listed 467

(Cable Down at 45° to Side of Vertical or Horizontal Steel Pipe)

VA (Pipe) Connection Type (Range Taking)

Cable Size	Nominal Pipe Size	Mold Part No.	Weld Metal	
			UltraShot	NUWTUBE
#2 Sol	1/2" to 1" Pipe	VA-2SV.5X1**B**	US45	NUWTUBE45
	1-1/2" to 4" Pipe	VA-2SV1.5X4**B**	US45	NUWTUBE45
	4" to 6" Pipe	VA-2SV4X6**B**	US45	NUWTUBE45
	6" to 10" Pipe	VA-2SV6X10**B**	US45	NUWTUBE45
#2	1-1/2" to 4" Pipe	VA-2V1.5X4**B**	US45	NUWTUBE45
	4" to 6" Pipe	VA-2V4X6**B**	US45	NUWTUBE45
	6" to 10" Pipe	VA-2V6X10**B**	US45	NUWTUBE45
1/0	2" to 4" Pipe	VA-1/0V2X4**B**	US90	NUWTUBE90
	4" to 6" Pipe	VA-1/0V4X6**B**	US90	NUWTUBE90
	6" to 10" Pipe	VA-1/0V6X10**B**	US90	NUWTUBE90
2/0	2" to 4" Pipe	VA-2/0V2X4**B**	US90	NUWTUBE90
	4" to 6" Pipe	VA-2/0V4X6**B**	US90	NUWTUBE90
	6" to 10" Pipe	VA-2/0V6X10**B**	US90	NUWTUBE90
4/0	2" to 4" Pipe	VA-4/0V2X4**B**	US115	NUWTUBE115
	4" to 6" Pipe	VA-4/0V4X6**B**	US115	NUWTUBE115
	6" to 10" Pipe	VA-4/0V6X10**B**	US115	NUWTUBE115

Cable to Bus Bar Connections

c UL us Listed 467

(Horizontal Cable Tap to Edge of Horizontal Flat Busbar)

BE Connection Type

Bus/Lug Size	Cable Size	Mold Part No.	Weld Metal	
			UltraShot	NUWTUBE
1/4 x 1-1/2 & Wider	#6	BE-141.56**B**	US65	NUWTUBE65
	#2 Sol	BE-141.52S**B**	US65	NUWTUBE65
	#2	BE-141.52**B**	US65	NUWTUBE65
	1/0	BE-141.51/0**B**	US90	NUWTUBE90
	2/0	BE-141.52/0**B**	US90	NUWTUBE90
	3/0	BE-141.53/0**B**	US90	NUWTUBE90
	4/0	BE-141.54/0**B**	US90	NUWTUBE90
3/8 x 1-1/2 & Wider	1/0	BE-381.51/0**B**	US90	NUWTUBE90
	2/0	BE-381.52/0**B**	US90	NUWTUBE90
	3/0	BE-381.53/0**B**	US115	NUWTUBE115
	4/0	BE-381.54/0**B**	US115	NUWTUBE115
1/2 x 1-1/2 & Wider	1/0	BE-121.51/0**B**	US115	NUWTUBE115
	2/0	BE-121.52/0**B**	US115	NUWTUBE115
	3/0	BE-121.53/0**B**	US150	NUWTUBE150
	4/0	BE-121.54/0**B**	US150	NUWTUBE150

Cable to Reinforcing Steel Connections

c UL us Listed 467

(Parallel Cable Tap of Horizontal Cable to Thru Horizontal Reinforcing Steel)

RP Connection Type

Size	Cable Size	Mold Part No.	Packing Mat'l No.	Weld Metal	
				UltraShot	Ultraweld
3	#6	RP-36**B**	WRPSLV	US25	NUWTUBE25
	#2	RP-32**B**	WRPSLV	US45	NUWTUBE45
	2/0	RP-32/0**B**	WRPSLV	US90	NUWTUBE90
	4/0	RP-34/0**B**	WRPSLV	US115	NUWTUBE115
4 & Larger	#6	RP-4L6**A**	CERPM1	US25	NUWTUBE25
	#2	RP-4L2**A**	CERPM1	US45	NUWTUBE45
4	2/0	RP-42/0**B**	WRPSLV	US90	NUWTUBE90
	4/0	RP-44/0**B**	WRPSLV	US115	NUWTUBE115
5	2/0	RP-52/0**B**	WRPSLV	US90	NUWTUBE90
	4/0	RP-54/0**B**	WRPSLV	US115	NUWTUBE115
6* & Larger	2/0	RP-6L2/0**B**	CERPM2	US90	NUWTUBE90
	4/0	RP-6L4/0**B**	CERPM2	US115	NUWTUBE115

*Requires #UMHDKIT Hold Down Kit for welds made to #6 and Larger reinforcing steel.
- (2) #WRPSLV Wrap Sleeves required per weld.
- (1) #CERPM1 or #CERPM2 Ceramic Packing Material required per weld.

Cable to Reinforcing Steel Connections

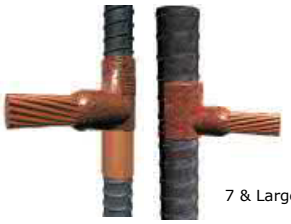

7 & Larger

c UL us Listed 467

(Tee of Vertical Thru Reinforcing Steel & Horizontal Tap Cable)

RE Connection Type

Size	Cable Size	Mold Part No.	Packing Mat'l No.	Weld Metal	
				UltraShot	NUWTUBE
3	#2	RE-32**B**	WRPSLV	US65	NUWTUBE65
	1/0	RE-31/0**B**	WRPSLV	US115	NUWTUBE115
	2/0	RE-32/0**B**	WRPSLV	US115	NUWTUBE115
	4/0	RE-34/0**B**	WRPSLV	US150	NUWTUBE150
4	#2	RE-42**B**	WRPSLV	US65	NUWTUBE65
	1/0	RE-41/0**B**	WRPSLV	US115	NUWTUBE115
	2/0	RE-42/0**B**	WRPSLV	US115	NUWTUBE115
	4/0	RE-44/0**B**	WRPSLV	US150	NUWTUBE150
5	#2	RE-52**B**	WRPSLV	US65	NUWTUBE65
	1/0	RE-51/0**B**	WRPSLV	US115	NUWTUBE115
	2/0	RE-52/0**B**	WRPSLV	US115	NUWTUBE115
	4/0	RE-54/0**B**	WRPSLV	US150	NUWTUBE150
6	#2	RE-62**B**	WRPSLV	US65	NUWTUBE65
	1/0	RE-61/0**B**	WRPSLV	US115	NUWTUBE115
	2/0	RE-62/0**B**	WRPSLV	US115	NUWTUBE115
	4/0	RE-64/0**B**	WRPSLV	US150	NUWTUBE150
7* & Larger	#2	RE-7L2**K**	CERPM3	US65	NUWTUBE65
	1/0	RE-7L1/0**K**	CERPM3	US115	NUWTUBE115
	2/0	RE-7L2/0**K**	CERPM3	US115	NUWTUBE115
	4/0	RE-7L4/0**K**	CERPM3	US150	NUWTUBE150

*Requires #CSKIT Chain Support Kit for welds made to #7 and Larger reinforcing steel.
- (1) #WRPSLV Wrap Sleeve required per weld.
- (1) #CERPM1 or #CERPM2 Ceramic Packing Material required per weld.

c UL us Listed 467

(Cross of Horizontal Cable Lapped Over Horizontal Reinforcing Steel)

RO Connection Type

Size	Cable Size	Mold Part No.	Packing Mat'l No.	Weld Metal	
				UltraShot	NUWTUBE
3	#6	RO-36**B**	WRPSLV	US65	NUWTUBE65
	#2	RO-32**B**	WRPSLV	US90	NUWTUBE90
	2/0	RO-32/0**Q**	WRPSLV	US115	NUWTUBE115
	4/0	RO-34/0**Q**	WRPSLV	US150	NUWTUBE150
4	#6	RO-46**B**	WRPSLV	US65	NUWTUBE65
	#2	RO-42**B**	WRPSLV	US90	NUWTUBE90
	2/0	RO-42/0**Q**	WRPSLV	US115	NUWTUBE115
	4/0	RO-44/0**Q**	WRPSLV	US150	NUWTUBE150
5	#6	RO-56**B**	WRPSLV	US65	NUWTUBE65
	#2	RO-52**B**	WRPSLV	US90	NUWTUBE90
	2/0	RO-52/0**Q**	WRPSLV	US115	NUWTUBE115
	4/0	RO-54/0**Q**	WRPSLV	US150	NUWTUBE150
6* & Larger	#6	RO-6L6**B**	CERPM1	US65	NUWTUBE65
	#2	RO-6L2**B**	CERPM1	US90	NUWTUBE90
	2/0	RO-6L2/0**B**	CERPM2	US115	NUWTUBE115
	4/0	RO-6L4/0**B**	CERPM2	US150	NUWTUBE150

*Requires #UMHDKIT Hold Down Kit for welds made to #6 and Larger reinforcing steel.
- (2) #WRPSLV Wrap Sleeves required per weld.
- (1) #CERPM1 or #CERPM2 Ceramic Packing Material required per weld.

Part No. - DRONE

(Pat. # US 9,562,751)

UltraShot® Features

- Patented copper drop-in cartridge consumed during the reaction process.
- The electronic ignition system fires instantly and uses a Milwaukee® M18™ REDLITHIUM™ 18 volt battery with a built in fuel gauge.
- Now with Audible Ignition Alert.
- Six-foot controller cord allows for flexibility in tight spaces as well as maintaining a safe distance from the reaction.

UltraShot® (Drop-In) Weld Metal

Size	Qty. Per Carton	Size	Qty. Per Carton
US25	20	US200	10
US32	20	US250	10
US45	20	US300	10
US65	20	US400	5
US90	10	US500	5
US115	10	US600	5
US150	10	US750	5

UltraShot® Benefits

- Cartridge is consumed leaving less waste such as plastic or metal containers on the job site.
- Long lasting **Ultra**-reliable ignition process allows for little to no downtime on the job site.
- UltraShot can be easily converted to the Low Smoke-No Flame system.

NUWTube®

- Uses the traditional method of ignition with starting powder.
- Innovative dual chamber design keeps weld metal and starting powder separate until point of use.
- Reduces material and labor costs by eliminating migrating starting powder issues.
- Less starting powder is needed, thereby reducing the amount of flash during the ignition process.

NUWTube® (Powder) Weld Metal

Size	Qty. Per Carton	Size	Qty. Per Carton
NUWTUBE15	20	NUWTUBE90	10
NUWTUBE25	20	NUWTUBE115	10
NUWTUBE32	20	NUWTUBE150	10
NUWTUBE45	20	NUWTUBE200	10
NUWTUBE65	20	NUWTUBE250	10

UltraShot® LO-smoke™

Harger Lightning & Grounding offers the industry's best LO-smoke™ System for indoor applications, confined spaces, high-risk fire environments and added safety for operators. The process uses standard Ultraweld molds, standard UltraShot weld metal and standard DRONE ignition system with a consumable filter to produce a finished connection with minimal smoke emission.

- The filter should be changed every connection to ensure the best performance.
- Ignition is accomplished with the use of the DRONE ignition system.

Kit Part No.	Fits Mold Price Key	Weld Metal Size	Filter Part No.	Filter Housing Part No.
USSKIT1	B, E, K, I, P, Q	25 thru 115	USSXFLR1.8	SAFHB25115
USSKIT2	B, E, K, I, P, Q	150 thru 300	USSXFLR2	SAFHB150300
USSKIT3	C, D, F, G, J, Y, Z	150 thru 400	USSXFLR3	SAFHC400

Kit Includes:

(1) Adapter Clamp (USSXADPTR)
(1) Filter Housing
(10) Filters

- Filters sold as 10 pack.

Tools & Accessories

#MH1, #MH2
Mold Handle

#MSKIT
Magnetic Support Kit

#MLDSTBLZR
Mold Stabilizer Kit

#DRONE
Compact UltraShot
Controller
(Pat. # US 9,562,751)

#MIL1820BAT
Drone Battery

#MH6, #MH7
Mold Handle

#UMHDKIT
Hold Down Kit

#MCBRSH1
Mold Cleaning
Brush (large)

#DRONECASE
Drone Controller
Storage Case

#CSKIT
Chain Support Kit

#CCBRSH2
Cable Cleaning Brush

#CCBRSH1
Cable Cleaning
Brush

#USBOXKIT
Toolbox with UltraShot Trays
(UltraShot Sold Separately)

#UWMOLDBOX
UltraWeld® Mold
Storage

Uni-Shots

UL Listed

G11

G21

G31

G41

Type	NUWTUBE Mold Part No.	UltraShot Mold Part No.	Ground Rod Size	Cable Size Solid	Cable Size Stranded
G11	G11-588NU	G11-588US	5/8″	#6, #8	#8
G11	G11-584NU	G11-584US	5/8″	#3, #4	#4, #6
G11	G11-582NU	G11-582US	5/8″	#1, #2	#2, #3
G21	G21-588NU	G21-588US	5/8″	#6, #8	#8
G21	G21-584NU	G21-584US	5/8″	#3, #4	#4, #6
G21	G21-582NU	G21-582US	5/8″	#1, #2	#2, #3
G31	G31-588NU	G31-588US	5/8″	#6, #8	#8
G31	G31-584NU	G31-584US	5/8″	#3, #4	#4, #6
G31	G31-582NU	G31-582US	5/8″	#1, #2	#2, #3
G41	G41-588NU	G41-588US	5/8″	#6, #8	#8
G41	G41-584NU	G41-584US	5/8″	#3, #4	#4, #6
G41	G41-582NU	G41-582US	5/8″	#1, #2	#2, #3
G11	G11-348NU	G11-348US	3/4″	#6, #8	#8
G11	G11-344NU	G11-344US	3/4″	#3, #4	#4, #6
G11	G11-342NU	G11-342US	3/4″	#1, #2	#2, #3
G21	G21-348NU	G21-348US	3/4″	#6, #8	#8
G21	G21-344NU	G21-344US	3/4″	#3, #4	#4, #6
G21	G21-342NU	G21-342US	3/4″	#1, #2	#2, #3
G31	G31-348NU	G31-348US	3/4″	#6, #8	#8
G31	G31-344NU	G31-344US	3/4″	#3, #4	#4, #6
G31	G31-342NU	G31-342US	3/4″	#1, #2	#2, #3
G41	G41-348NU	G41-348US	3/4″	#6, #8	#8
G41	G41-344NU	G41-344US	3/4″	#3, #4	#4, #6
G41	G41-342NU	G41-342US	3/4″	#1, #2	#2, #3

NOTE: For Full Size ground rod, add "F" after the ground rod size. Example: G3134F2US

HARGER®

Harger Lightning & Grounding
301 Ziegler Drive • Grayslake, IL 60030
Phone: 800-842-7437 • 847-548-8700
www.harger.com • hargersales@harger.com

MADE IN THE USA

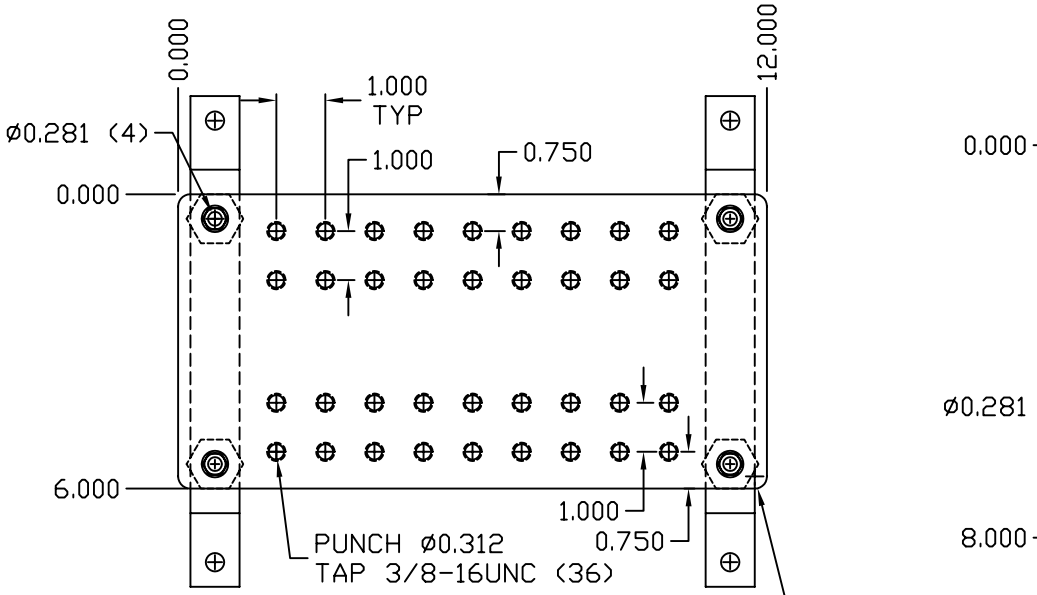

GROUND BAR ASSEMBLY

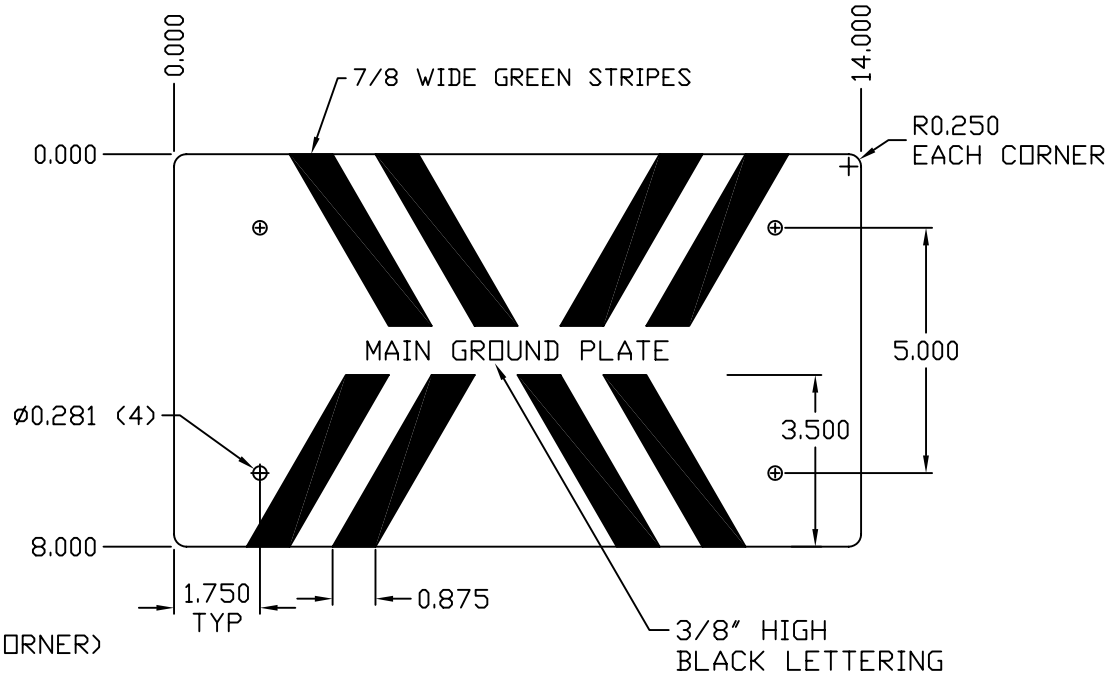

PLEXIGLASS COVER

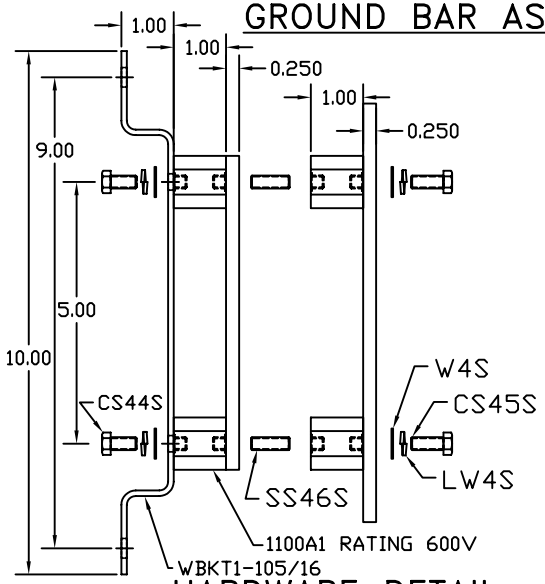

HARDWARE DETAIL

SCALE 16:15

SIMILAR TO BARS:
GBIP14612CESPGFAA
GBIP14612MGPFAA2
GBIP14612MGPFAA3
GBIP14612EMGSFAA
GBIP14612SGPFAA
GBIP14612TGPFAA

EST WEIGHT: 7.8 LBS

APPROVED

☐ AS DRAWN: _____

☐ AS NOTED: _____

DATE: _____

THIS DOCUMENT AND THE CONTENTS THEREOF IS THE PROPERTY OF HARGER INC., AND IS FURNISHED TO YOU FOR INFORMATION ONLY. THE INFORMATION CONTAINED HEREIN IS CONFIDENTIAL AND OF A PROPRIETARY NATURE AND MUST NOT BE DISCLOSED TO THIRD PARTIES WITHOUT THE EXPRESS WRITTEN APPROVAL OF HARGER INC.

LET	REVISION	DATE	BY
–	–	–	–
A	TAPS WERE 3/4" VERT O.C. & 1/2-13	092608	DVB

TOLERANCES UNLESS NOTED:
FRACTIONAL +/- 1/16
.00 +/- .030
.000 +/- .010

3RD ANGLE PROJECTION

PART NO. GBIP14612MGPFAA3

GROUND BAR ASSEMBLY W/ PLEXIGLASS
FAA –

DRAWN BY: DVBV
CHECKED BY: –
DATE: 051208

HARGER™
301 ZIEGLER DRIVE
GRAYSLAKE, IL 60030
(847) 548-8700

REVISION: A
SCALE: 1/4
SHEET: 1 OF 1

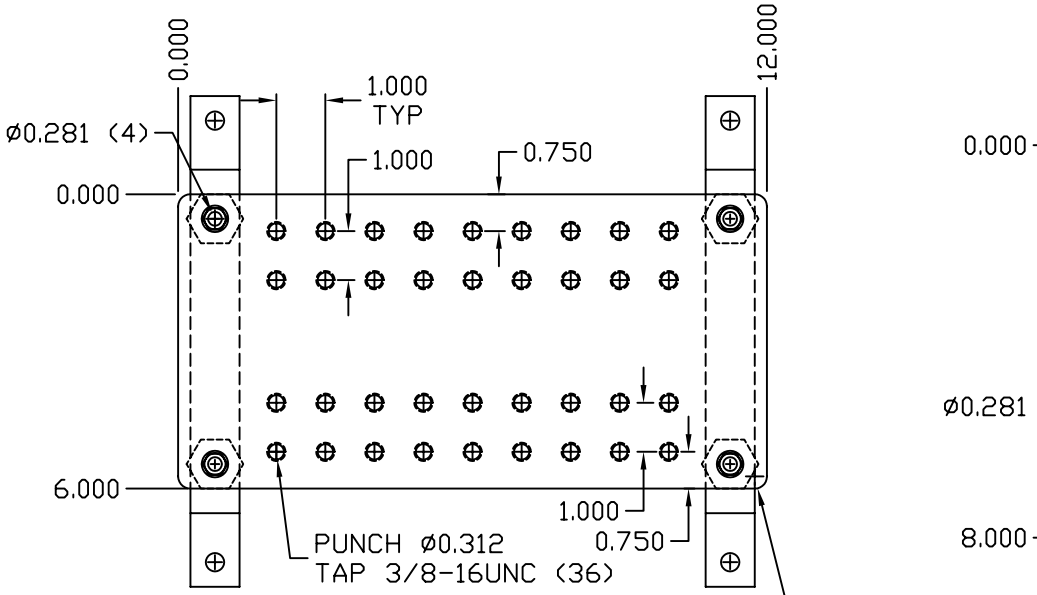

GROUND BAR ASSEMBLY

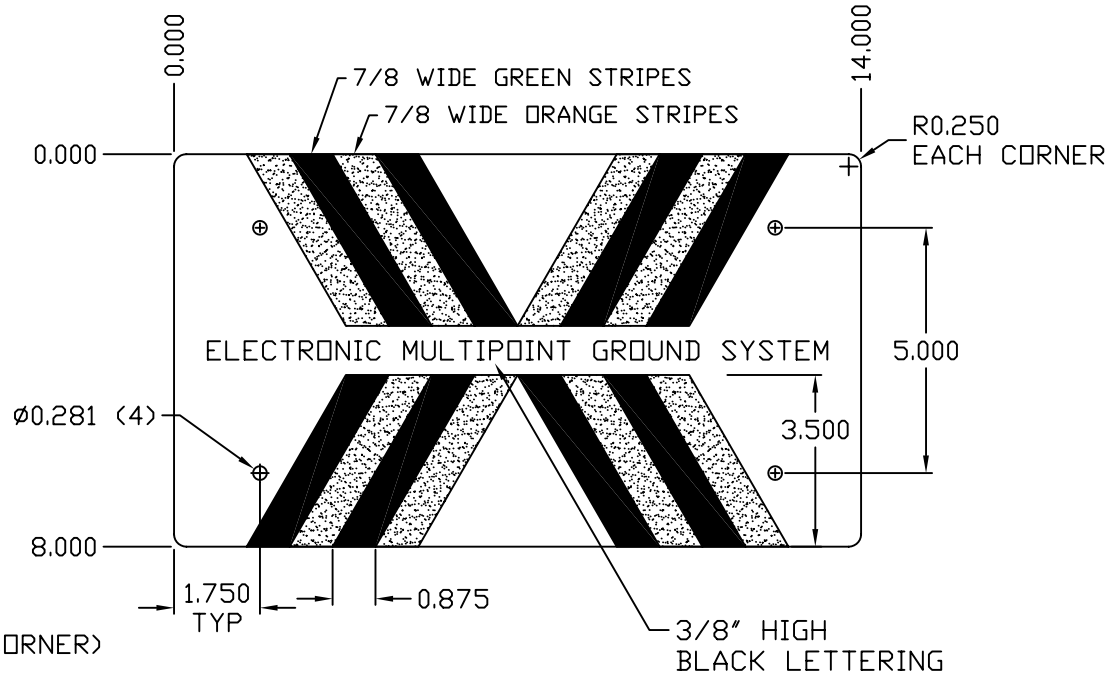

PLEXIGLASS COVER

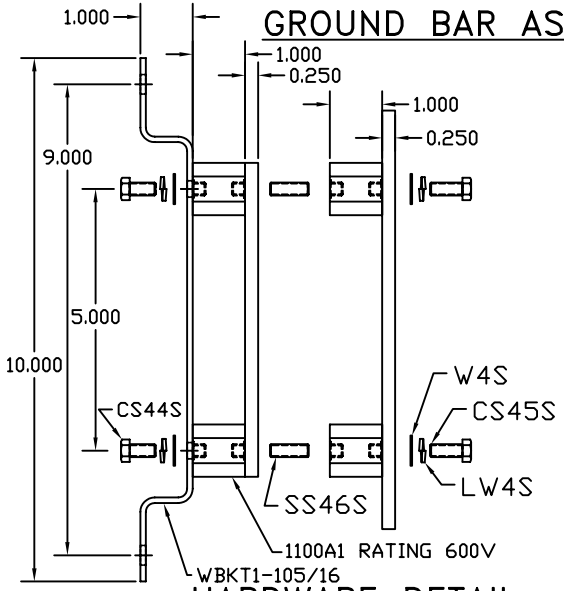

HARDWARE DETAIL

SCALE 16:15

SIMILAR TO BARS:
GBIP14612CESPGFAA
GBIP14612MGPFAA2
GBIP14612MGPFAA3
GBIP14612EMGSFAA
GBIP14612SGPFAA
GBIP14612TGPFAA

EST WEIGHT: 7.8 LBS

APPROVED

☐ AS DRAWN: _____

☐ AS NOTED: _____

DATE: _____

THIS DOCUMENT AND THE CONTENTS THEREOF IS THE PROPERTY OF HARGER INC., AND IS FURNISHED TO YOU FOR INFORMATION ONLY. THE INFORMATION CONTAINED HEREIN IS CONFIDENTIAL AND OF A PROPRIETARY NATURE AND MUST NOT BE DISCLOSED TO THIRD PARTIES WITHOUT THE EXPRESS WRITTEN APPROVAL OF HARGER INC.

LET	REVISION	DATE	BY
–	–	–	–
A	TAPS WERE 3/4" VERT O.C. & 1/2-13	092608	DVB

TOLERANCES UNLESS NOTED:
FRACTIONAL +/- 1/16
.00 +/- .030
.000 +/- .010

3RD ANGLE PROJECTION

PART NO. GBIP14612EMGSFAA

GROUND BAR ASSEMBLY W/ PLEXIGLASS
FAA –

DRAWN BY: DVBV
CHECKED BY: –
DATE: 051208

HARGER™
301 ZIEGLER DRIVE
GRAYSLAKE, IL 60030
(847) 548-8700

REVISION: A
SCALE: 1/4
SHEET: 1 OF 1

THIS PAGE LEFT INTENTIONALLY BLANK

Thompson Lightning Protection, Inc.

CONTACT US FOR MORE INFO
1 (800) 777-1230

28R Sampson

CLASS 1 CLASS 2

28 strands of 14 gauge copper wire, 1/2" diameter, rope lay, 115,000 circular mils, net weight 375 lbs. per 1000 ft.

© 2011 Thompson Lightning Protection, Inc.
901 Sibley Highway • Saint Paul, MN 55118-1792

Site design by Plaudit Design (Minneapolis, MN)

Thompson Lightning Protection, Inc.

CONTACT US FOR MORE INFO
1 (800) 777-1230

32 Standard

CLASS 1

32 strands of 17 gauge copper wire, 7/16" diameter, braided smooth twist 65,500 circular mils, net weight 215 lbs. per 1000 ft.

© 2011 Thompson Lightning Protection, Inc.
901 Sibley Highway • Saint Paul, MN 55118-1792

Site design by Plaudit Design (Minneapolis, MN)

Thompson Lightning Protection, Inc.

CONTACT US FOR MORE INFO
1 (800) 777-1230

435B Masonry Cable Attachment

CLASS 1 CLASS 2

Heavy duty bronze 2 screw masonry attachment with 1/2" anchor for cable thru No. 507.

Specify wire size at time of order.

UL LISTED 96

© 2011 Thompson Lightning Protection, Inc.
901 Sibley Highway • Saint Paul, MN 55118-1792

Site design by Plaudit Design (Minneapolis, MN)

Thompson Lightning Protection, Inc.

CONTACT US FOR MORE INFO
1 (800) 777-1230

Lightning Protection Products / Cable Holders / Bimetal Cable Holders / 166XXT Cable Loop

166XXT Cable Loop

CLASS 1 CLASS 2

1" wide copper loop with 1/4" mounting holes for all cables through No. 506. Specially plated for bimetal use.

UL LISTED 96

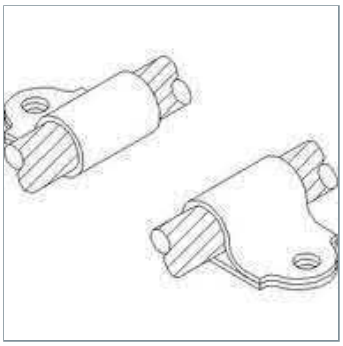

© 2011 Thompson Lightning Protection, Inc.
901 Sibley Highway • Saint Paul, MN 55118-1792

Site design by Plaudit Design (Minneapolis, MN)

Thompson Lightning Protection, Inc.

CONTACT US FOR MORE INFO
1 (800) 777-1230

Lightning Protection Products / Splicers / Splicer Parallel Bimetal / 423T Splicer

423T Splicer

CLASS 1 CLASS 2

Specially plated parallel splicer used as a bimetal connection between copper and aluminum conductors. For cables through No. 507 to other cables or to solid rods up to 5/8" in diameter. This superior grade clamp is a full 2" long and provides a superior connection for a wide combination of sizes using 2 - 5/16" stainless steel carriage bolts.

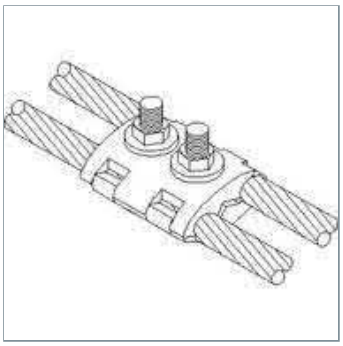

UL LISTED 96

© 2011 Thompson Lightning Protection, Inc.
901 Sibley Highway • Saint Paul, MN 55118-1792

Site design by Plaudit Design (Minneapolis, MN)

Thompson Lightning Protection, Inc.

CONTACT US FOR MORE INFO
1 (800) 777-1230

702T Bonding Plate

CLASS 1 CLASS 2

Premium die cast bronze bonding plate with 8 square inch bimetal plated contact area. Specially plated for bimetal use. The pressure type cable connector is for conductors through No. 506/A508. This plate will accommodate either a "dead-end" or continuous through cable route. The two holes will fit either sheet metal screws or 1/4" machine screws.

UL LISTED 96

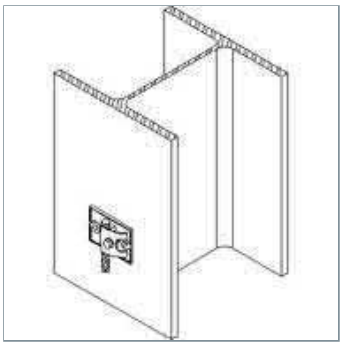

© 2011 Thompson Lightning Protection, Inc.
901 Sibley Highway • Saint Paul, MN 55118-1792

Site design by Plaudit Design (Minneapolis, MN)

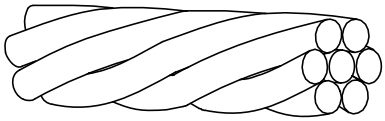

4/0-7
7 Strand 4/0 AWG Concentric Soft-Drawn Bare Copper

DESCRIPTION

- Weighs 653 pounds per 1000 feet.
- Cross-sectional area equal to 211,600 circular mils.
- Conductor diameter = 0.528”
- Meets the requirements of ASTM B3 and B8

APPLICATIONS

- For use as grounding conductor.

301 Ziegler Drive, Grayslake, IL 60030
847-548-8700 • 800-842-7437 • Fax: 847-548-8755
Web-site: www.harger.com • E-mail: hargersales@harger.com

THIS PAGE LEFT INTENTIONALLY BLANK

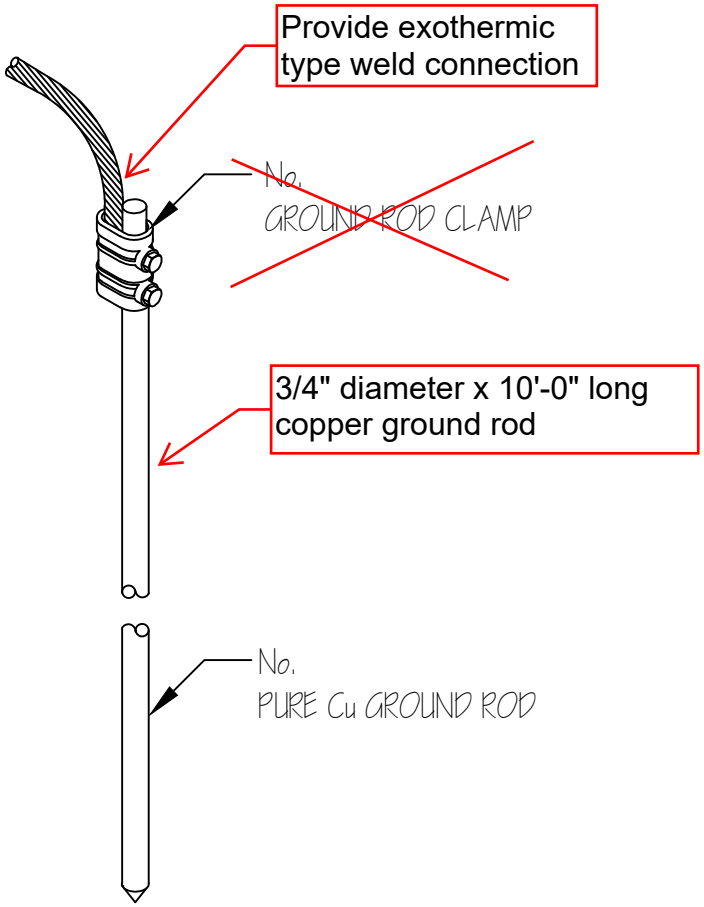

PROJECT:

REVISION	DATE

JOB NO: FILE:

DR BY: DATE: 8.24.11

CH BY: SHT

THOMPSON LIGHTNING PROTECTION, INC.
901 SIBLEY HIGHWAY ST. PAUL, MN 55118-1792
MANUFACTURERS,CONTRACTORS & ENGINEERS
1-800-777-1230
(P): 651-455-7661
(F): 651-455-2545

THIS PAGE LEFT INTENTIONALLY BLANK

Dimensions / Data

15″ x 17″ FRP Flared

Penta Head Bolts are Standard

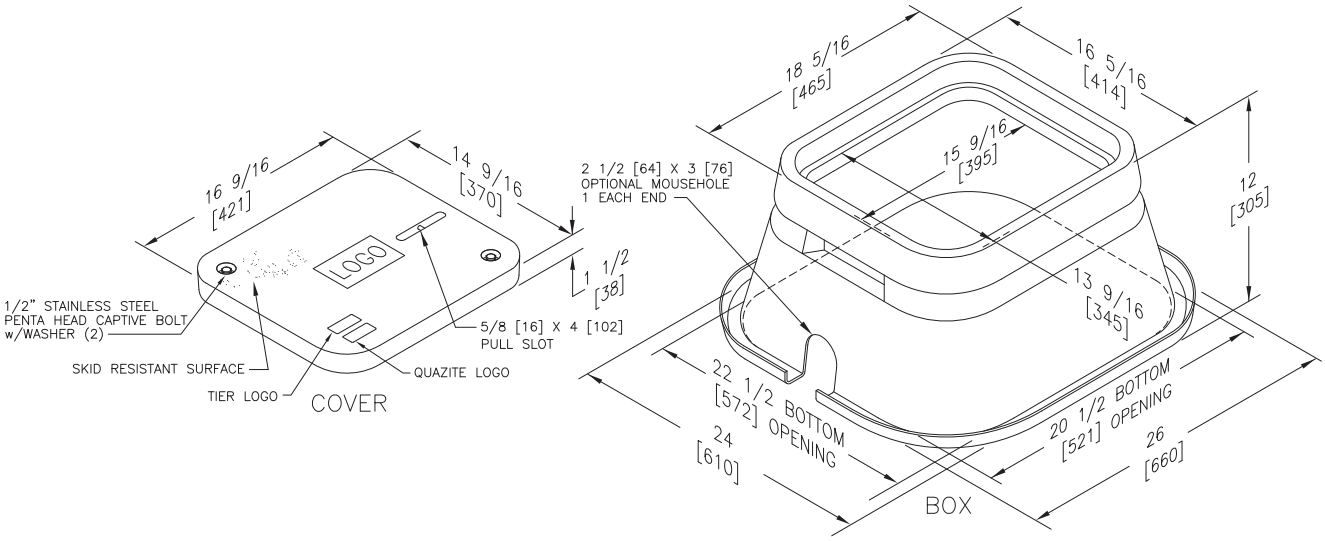

Covers

DESCRIPTION	TIER	DESIGN / TEST LOAD #	WEIGHT #	PALLET QTY	PART NO.
W/ 2 Bolts	8	8,000 / 12,000	22	100	C10151702A***
W/ 2 Bolts	15	15,000 / 22,500	25	100	C12151702A***
No Bolts	8	8,000 / 12,000	22	100	C00151702A***
No Bolts, w/CI Reader, Under 90	5*	5,000 / 7,500	27	100	C08151702F009

Replace *** with a logo code found on page 142. See page 145 for other meter lid and touch/radio read cover options.
* CI Reader covers also available in Tier 8.

Boxes

DESCRIPTION	DEPTH	TIER	DESIGN / TEST LOAD #	WEIGHT #	PALLET QTY	PART NO.
Standard Open Bottom	12″	8	8,000 / 12,000	24	20	B10151712A
	12″	15	15,000 / 22,500	28	20	B12151712A

To order with 2 standard mouseholes, replace the last character with "M".
To order gasketed boxes, replace the letter "A" with the letter "G".
NOTE: Gasket reduce the inflow of fluids but do not make the enclosure water tight.
NOTE: Cover rating cannot exceed box rating.

THIS PAGE LEFT INTENTIONALLY BLANK

KOHLER®

Model: KG125

190-600 V Gas

ISO 9001 KOHLER NATIONALLY REGISTERED

EPA-Certified for 60 Hz Stationary Emergency Applications

EPA certification not applicable at 50 Hz

Ratings Range

		60 Hz	50 Hz
Standby:	**kW**	91-125	78-100
	kVA	91-156	78-125

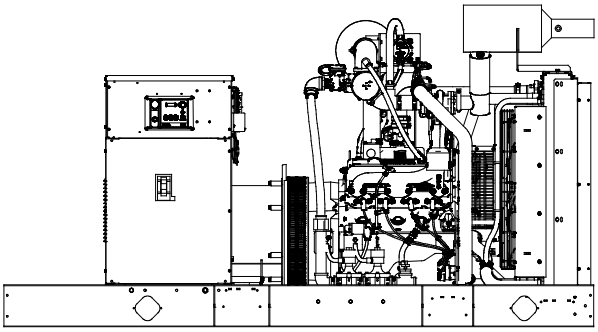

Standard Features

- Kohler Co. provides one-source responsibility for the generating system and accessories.
- The generator set and its components are prototype-tested, factory-built, and production-tested.
- The 60 Hz generator set offers a UL 2200 listing.
- CSA approval is available.
- The 60 Hz generator set meets NFPA 110, Level 1, when equipped with the necessary accessories and installed per NFPA standards.
- The generator set accepts rated load in one step.
- A one-year limited warranty covers all generator set systems and components. Two- and five-year extended limited warranties are also available.
- Alternator features:
  - The unique Fast-Response® X excitation system delivers excellent voltage response and short-circuit capability using a rare-earth, permanent magnet (PM)-excited alternator.
  - The brushless, rotating-field alternator has broadrange reconnectability.
- Dual fuel model features:
  - Natural gas is the primary fuel. Automatically transfers back to primary fuel when LPG fuel becomes low or generator stops and restarts.
  - The patent pending reset box on the generator provides the ability to manually transfer back to natural gas.
  - The natural gas rating is available when running on natural gas.
  - APM603 controller provides load shed for automatic derate to LPG ratings to prevent an overload condition.

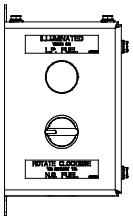

Generator Set Ratings

Alternator	Voltage	Ph	Hz	Natural Gas 130°C Rise Standby Rating kW/kVA	Amps	LP Gas 130°C Rise Standby Rating kW/kVA	Amps
	120/208	3	60	120/150	417	105/131	364
	127/220	3	60	125/156	410	105/131	344
	120/240	3	60	120/150	361	105/131	316
	120/240	1	60	91/91	380	91/91	380
	139/240	3	60	125/156	376	105/131	316
	220/380	3	60	110/138	210	105/131	200
	277/480	3	60	125/156	188	105/131	158
	347/600	3	60	125/156	151	105/131	127
4R12X	110/190	3	50	100/125	380	86/108	329
	115/200	3	50	100/125	361	86/108	312
	120/208	3	50	100/125	347	86/108	300
	110/220	3	50	100/125	329	86/108	284
	110/220	1	50	84/84	382	84/84	382
	220/380	3	50	100/125	190	86/108	165
	230/400	3	50	100/125	181	86/108	156
	240/415	3	50	100/125	174	86/108	151

RATINGS: All three-phase units are rated at 0.8 power factor. All single-phase units are rated at 1.0 power factor. *Standby Ratings:* The standby rating is applicable to varying loads for the duration of a power outage. There is no overload capability for this rating. Ratings are in accordance with ISO-8528-1 and ISO-3046-1. Obtain technical information bulletin (TIB-101) for ratings guidelines, complete ratings definitions, and site condition derates. The generator set manufacturer reserves the right to change the design or specifications without notice and without any obligation or liability whatsoever.

Generator Set Ratings, continued

Alternator	Voltage	Ph	Hz	Natural Gas 130°C Rise Standby Rating kW/kVA	Natural Gas 130°C Rise Standby Rating Amps	LP Gas 130°C Rise Standby Rating kW/kVA	LP Gas 130°C Rise Standby Rating Amps
4R13X	120/208	3	60	125/156	434	105/131	364
	127/220	3	60	125/156	410	105/131	344
	120/240	3	60	125/156	376	105/131	316
	120/240	1	60	105/105	438	100/100	417
	139/240	3	60	125/156	376	105/131	316
	220/380	3	60	120/150	228	105/131	200
	277/480	3	60	125/156	188	105/131	158
	347/600	3	60	125/156	151	105/131	127
	110/190	3	50	100/125	380	86/108	329
	115/200	3	50	100/125	361	86/108	312
	120/208	3	50	100/125	347	86/108	300
	115/230	3	50	100/125	314	86/108	272
	115/230	1	50	78/78	340	78/78	340
	220/380	3	50	100/125	190	86/108	165
	230/400	3	50	100/125	181	86/108	156
	240/415	3	50	100/125	174	86/108	151
4T13X	120/240	1	60	125/125	521	105/105	438
	110/220	1	50	91/91	414	86/86	391

Alternator Specifications

Specifications	Alternator
Manufacturer	Kohler
Type	4-Pole, Rotating-Field
Exciter type	Brushless, Rare- Earth Permanent Magnet
Leads: quantity, type	
4RX	12, Reconnectable
4TX	4, 110- 120/220- 240
Voltage regulator	Solid State, Volts/Hz
Insulation:	NEMA MG1
Material	Class H
Temperature rise	130°C, Standby
Bearing: quantity, type	1, Sealed
Coupling	Flexible Disc
Amortisseur windings	Full
Voltage regulation, no-load to full-load	Controller Dependent
One-step load acceptance	100% of Rating
Unbalanced load capability	100% of Rated Standby Current
Peak motor starting kVA:	(35% dip for voltages below)
480 V, 380 V 4R12X (12 lead)	448 (60 Hz), 355 (50 Hz)
480 V, 380 V 4R13X (12 lead)	540 (60 Hz), 425 (50 Hz)
240 V, 220 V 4T13X (4 lead)	440 (60 Hz), 396 (50 Hz)

- NEMA MG1, IEEE, and ANSI standards compliance for temperature rise and motor starting.
- Sustained short-circuit current of up to 300% of the rated current for up to 10 seconds.
- Sustained short-circuit current enabling downstream circuit breakers to trip without collapsing the alternator field.
- Self-ventilated and dripproof construction.
- Superior voltage waveform from a two-thirds pitch stator and skewed rotor.
- Windings are vacuum- impregnated with epoxy varnish for dependability and long life.

Application Data

Engine

Engine Specifications	60 Hz	50 Hz
Manufacturer	Kohler	
Engine: model, type	KG6208THD 6.2 L Turbocharged, Aftercooled	
Cylinder arrangement	V-8	
Displacement, L (cu. in.)	6.2 (378)	
Bore and stroke, mm (in.)	101.6 x 95.25 (4.00 x 3.75)	
Compression ratio	9.8:1	
Rated rpm	1800	1500
Max. power at rated rpm, kW (HP)		
NG	152 (204)	125 (168)
LP	131 (175)	109 (146)
Cylinder head material	Cast Aluminum	
Piston type and material	Cast Aluminum	
Crankshaft material	Forged steel	
Valve (exhaust) material	Forged Steel	
Governor type	Electronic	
Frequency regulation, no-load to full-load	Isochronous	
Frequency regulation, steady state	±1.0%	
Frequency	Fixed	
Air cleaner type, all models	Dry	

Exhaust

Exhaust System	60 Hz	50 Hz
Exhaust manifold type	Dry	
Exhaust flow at rated kW, m^3/min. (cfm)	29 (1024)	24 (848)
Exhaust temperature at rated kW, dry exhaust, °C (°F)	700 (1292)	650 (1202)
Maximum allowable back pressure, kPa (in. Hg)	14.9 (4.4)	12 (3.54)
Exhaust outlet size at engine hookup, mm (in.)	88.9 (3.5)	

Engine Electrical

Engine Electrical System	60 Hz	50 Hz
Ignition system	Coil Pack	
Battery charging alternator:		
Ground (negative/positive)	Negative	
Volts (DC)	12	
Ampere rating	130	
Starter motor rated voltage (DC)	12	
Battery, recommended cold cranking amps (CCA):		
Qty., rating for - 18°C (0°F)	One, 650	
Battery voltage (DC)	12	

Fuel

Fuel System	60 Hz	50 Hz
Fuel type	Natural Gas, LP Gas, or Dual Fuel	
Fuel supply line inlet	1.5 NPT	
Natural gas and LPG vapor fuel supply pressure, kPa (in. H_2O)	1.74- 2.74 (7-11)	

Fuel Composition Limits *	Nat. Gas	LP Gas
Methane, % by volume	90 min.	—
Ethane, % by volume	4.0 max.	—
Propane, % by volume	1.0 max.	85 min.
Propene, % by volume	0.1 max.	5.0 max.
C_4 and higher, % by volume	0.3 max.	2.5 max.
Sulfur, ppm mass	25 max.	
Lower heating value, MJ/m^3 (Btu/ft^3), min.	33.2 (890)	84.2 (2260)

* Fuels with other compositions may be acceptable. If your fuel is outside the listed specifications, contact your local distributor for further analysis and advice.

Lubrication

Lubricating System	60 Hz	50 Hz
Type	Full Pressure	
Oil pan capacity, L (qt.) §	5.7 (6.0)	
Oil pan capacity with filter and oil cooler, L (qt.) §	9.0 (9.5)	
Oil filter: quantity, type §	1, Cartridge	

§ Kohler recommends the use of Kohler Genuine oil and filters.

Cooling

Radiator System	60 Hz	50 Hz
Ambient temperature, °C (°F) *	50 (122)	
Engine jacket water capacity, L (gal.)	7.3 (1.93)	
Radiator system capacity, including engine, L (gal.)	28.4 (7.5)	
Engine jacket water flow, Lpm (gpm)	126 (33.3)	105 (27.7)
Heat rejected to cooling water at rated kW, dry exhaust, kW (Btu/min.)	81.4 (4633)	68.9 (3922)
Heat rejected to charge air cooler at rated kW, dry exhaust, kW (Btu/min.)	18 (1025)	15 (854)
Water pump type	Centrifugal	
Fan diameter, including blades, mm (in.)	711 (28)	
Fan, kWm (HP)	12 (16.1)	7.0 (9.4)
Max. restriction of cooling air, intake and discharge side of radiator, kPa (in. H_2O)	0.12 (0.5)	

* Enclosure with enclosed silencer reduces ambient temperature capability by 5°C (9°F).

Operation Requirements

Air Requirements	60 Hz	50 Hz
Radiator-cooled cooling air, m^3/min. (scfm) †	290 (10,241)	242 (8,546)
Combustion air, m^3/min. (cfm)	6.9 (244)	5.8 (205)
Heat rejected to ambient air:		
Engine, kW (Btu/min.)	37 (2106)	30 (1708)
Alternator, kW (Btu/min.)	10 (569)	9 (512)

† Air density = 1.20 kg/m^3 (0.075 lbm/ft^3)

Fuel Consumption ‡	60 Hz	50 Hz
Natural Gas, m^3/hr. (cfh) at % load	Standby Ratings	
100%	47.5 (1678)	38.1 (1345)
75%	39.5 (1396)	31.9 (1126)
50%	30.7 (1084)	23.7 (836)
25%	20.4 (720)	14.9 (526)
0%	8.3 (292)	7.1 (252)
LP Gas, m^3/hr. (cfh) at % load	Standby Ratings	
100%	18.8 (664)	14.0 (496)
75%	15.1 (532)	10.6 (373)
50%	11 (388)	6.9 (242)
25%	6.1 (216)	4.5 (158)
0%	3.4 (121)	2.5 (88)

‡ Nominal fuel rating: Natural gas, 37 MJ/m^3 (1000 Btu/ft.^{3})
LP vapor, 93 MJ/m^3 (2500 Btu/ft.^{3})

LP vapor conversion factors:
8.58 ft.^{3} = 1 lb.
0.535 m^3 = 1 kg.
36.39 ft.^{3} = 1 gal.

Controllers

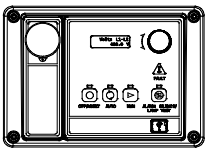

APM402 Controller

Provides advanced control, system monitoring, and system diagnostics for optimum performance and compatibility.

- Digital display and menu control provide easy local data access
- Measurements are selectable in metric or English units
- Remote communication thru a PC via network or serial configuration
- Controller supports Modbus® protocol
- Integrated hybrid voltage regulator with ±0.5% regulation
- Built-in alternator thermal overload protection
- NFPA 110 Level 1 capability

Refer to G6-161 for additional controller features and accessories.

Modbus® is a registered trademark of Schneider Electric.

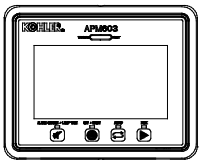

APM603 Controller

Provides advanced control, system monitoring, and system diagnostics for optimum performance and compatibility.

- 7-inch graphic display with touch screen and menu control provides easy local data access
- Measurements are selectable in metric or English units
- Paralleling capability to control up to 8 generators on an isolated bus with first-on logic, synchronizer, kW and kVAR load sharing, and protective relays
  Note: Parallel with other APM603 controllers only
- Generator management to turn paralleled generators off and on as required by load demand
- Load management to connect and disconnect loads as required
- Controller supports Modbus® RTU, Modbus® TCP, SNMP and BACnet®
- Integrated voltage regulator with ±0.25% regulation
- Built-in alternator thermal overload protection
- UL-listed overcurrent protective device
- NFPA 110 Level 1 capability

Refer to G6-162 for additional controller features and accessories.

BACnet® is a registered trademark of ASHRAE.

KOHLER CO., Kohler, Wisconsin 53044 USA
Phone 920-457-4441, Fax 920-459-1646
For the nearest sales and service outlet in the US and Canada, phone 1-800-544-2444
KOHLERPower.com

Standard Features

- Air Cleaner Restrictor Indicator
- Alternator Protection
- Battery Rack and Cables
- Dual Fuel Reset Box (standard on dual fuel models)
- Electronic, Isochronous Governor
- Gas Fuel System (includes fuel mixer, electronic secondary gas regulator, gas solenoid valve, and flexible fuel line between the engine and the skid-mounted fuel system components)
- Integral Vibration Isolation
- Local Emergency Stop Switch
- Oil Drain Extension
- Operation and Installation Literature
- Open Unit Accessory Kit (radiator duct flange, stone guard, flexible exhaust, and three-way catalyst)
- Three- Way Exhaust Catalyst

Available Options

Circuit Breakers

Type

- ☐ Magnetic Trip
- ☐ Thermal Magnetic Trip
- ☐ Electronic Trip (LI)
- ☒ Electronic Trip with Short Time (LSI)
- ☐ Electronic Trip with Ground Fault (LSIG)

Rating

- ☒ 80%
- ☐ 100%

Operation

- ☐ Manual
- ☐ Electrically Operated (for paralleling)

Circuit Breaker Mounting

- ☒ Generator Mounted
- ☐ Remote Mounted
- ☐ Bus Bar (for remote mounted breakers)

Enclosures for Remote Mounted Circuit Breakers

- ☐ NEMA 1
- ☐ NEMA 3R

Approvals and Listings

- ☐ CSA Approval
- ☒ IBC Seismic Certification
- ☒ UL 2200 Listing
- ☐ Hurricane Rated Enclosure

Enclosure

- ☒ Sound Enclosure (with enclosed critical silencer)
- ☐ Weather Enclosure (with enclosed critical silencer)

Open Unit

- ☐ Exhaust Silencer, Critical
- ☐ Flexible Exhaust Connector, Stainless Steel

Fuel System

- ☐ Dual Fuel NG/LPG (automatic changeover)
- ☐ Flexible Fuel Line
- ☐ Fuel Filter Kit
- ☐ Secondary Gas Solenoid Valve (NFPA Fuel System)

Controller

- ☐ Common Failure Relay (APM603 Controller only)
- ☐ Four Input/Fifteen Output Module
- ☐ Lockable Emergency Stop
- ☐ Manual Key Switch (APM603 only)
- ☐ Manual Speed Adjust (APM402 only)
- ☐ Remote Emergency Stop
- ☐ Run Relay (Standard with APM603)
- ☐ Remote Annunciator panel
- ☐ Two Input/Five Output Module (APM402 only)

Cooling System

- ☐ Block Heater, 1500 W, 110- 120 V
- ☒ Block Heater, 1500 W, 190- 240 V
  Recommended for ambient temperatures below 10°C (50°F)

Electrical System

- ☐ Battery
- ☐ Battery Charger
- ☐ Battery Charger Temperature Compensation
- ☐ Battery Heater
- ☐ Generator Heater

Miscellaneous

- ☐ Certified Test Report
- ☐ Engine Fluids Added
- ☐ Rated Power Factor Testing
- ☐ Rodent Guards

Literature

- ☐ General Maintenance
- ☐ NFPA 110
- ☐ Overhaul
- ☐ Production

Warranty

- ☐ 2-Year Basic Limited Warranty
- ☐ 5-Year Basic Limited Warranty
- ☐ 5-Year Comprehensive Limited Warranty

Dimensions and Weights

Overall Size, L x W x H, mm (in.) : 2800 x 1120 x 1528 (110.2 x 44.1 x 60.2)
Weight, wet, kg (lb.): 1207 (2660)

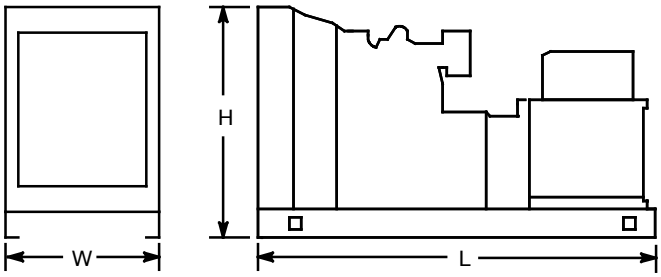

NOTE: This drawing is provided for reference only and should not be used for planning installation. Contact your local distributor for more detailed information.

DISTRIBUTED BY:

© 2019 Kohler Co. All rights reserved.

Weather and Sound Enclosures

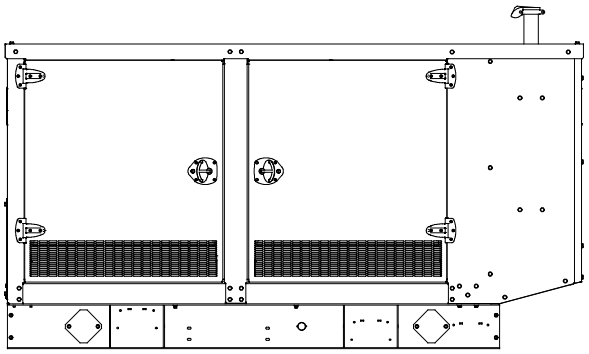

KG40- KG60

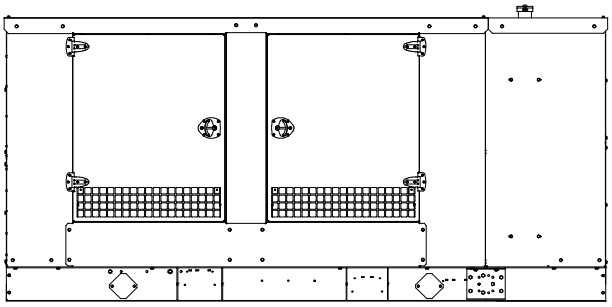

KG80- 125

Available Approvals and Listings

- ❑ UL 2200 Listing
- ❑ CSA Certified
- ❑ IBC Seismic Certification
- ❑ Hurricane Rated Enclosure - Available on sound aluminum
  (Impact rated for Large Missile Level E and Wind load rated per Florida Building Code tested to TAS201- 94, TAS202- 94 and TAS203- 94 standards)

NOTE: Some models may have limited third-party approvals; see your local distributor for details.

Applicable to the following:
KG40- 125

Weather Enclosure Standard Features

- Internal-mounted critical silencer and flexible exhaust connector.
- Skid-mounted, steel construction with hinged doors.
- Fade-, scratch-, and corrosion-resistant Kohler® Power Armor™ automotive-grade textured finish.
- Enclosure has four access doors which allow for easy maintenance.
- Lockable, flush-mounted door latches.
- Vertical air outlet discharge to redirect air and reduce noise.
- Steel weather enclosure is analyzed to 150 mph (241 kph) wind load rating.

Sound Enclosure Standard Features

- Includes all of the weather enclosure features with the addition of acoustic insulation material.
- Skid-mounted, steel or aluminum construction with hinged doors. Aluminum enclosures are recommended for high humidity and/or high salt/coastal regions.
- Acoustic insulation that meets UL 94 HF1 flammability classification and repels moisture absorption.
- Sound attenuated enclosure that uses up to 51 mm (2 in.) of acoustic insulation, acoustic-lined air inlet hoods, and acoustic-lined air discharge hood.
- Aluminum sound enclosure is certified to 186 mph (299 kph) wind load rating.
- Steel sound enclosure is analyzed to 150 mph (241 kph) wind load rating.

Weather and Sound Enclosure Specifications

Model	Max. Dimensions, mm (in.)			Weight, kg (lb.) *			Sound Pressure Level at 60 Hz with Full Load, Weather/Sound, dB(A) †
	Length	Width	Height	Steel Weather Enclosure	Steel Sound Enclosure	Aluminum Sound Enclosure	
KG40	2585 (101.8)	1078 (42.4)	1531 (60.3)	1046 (2307)	1051 (2318)	959 (2115)	79/64
KG45				1101 (2427)	1106 (2438)	1014 (2235)	79/65
KG50							79/67
KG60							79/68
KG80	3525 (138.8)	1154 (45.4)	1709 (67.3)	1417 (3123)	1427 (3146)	1337 (2948)	84/69
KG100			1713 (67.4)	1605 (3539)	1616 (3562)	1515 (3340)	81/69
KG125				1605 (3539)	1616 (3562)	1515 (3340)	81/71

Note: Data in table is for reference only, refer to the respective ADV drawings for details.

* Max. weight includes the generator set (wet) with largest alternator option, enclosure, and silencer.

† Log average sound pressure level of 8 measured positions around the perimeter of the unit at a distance of 7 m (23 ft). Refer to TIB-114 for details.

KOHLER CO., Kohler, Wisconsin 53044 USA
Phone 920-457-4441, Fax 920-459-1646
For the nearest sales and service outlet in the US and Canada, phone 1-800-544-2444
KOHLERPower.com

Weather and Sound Enclosure

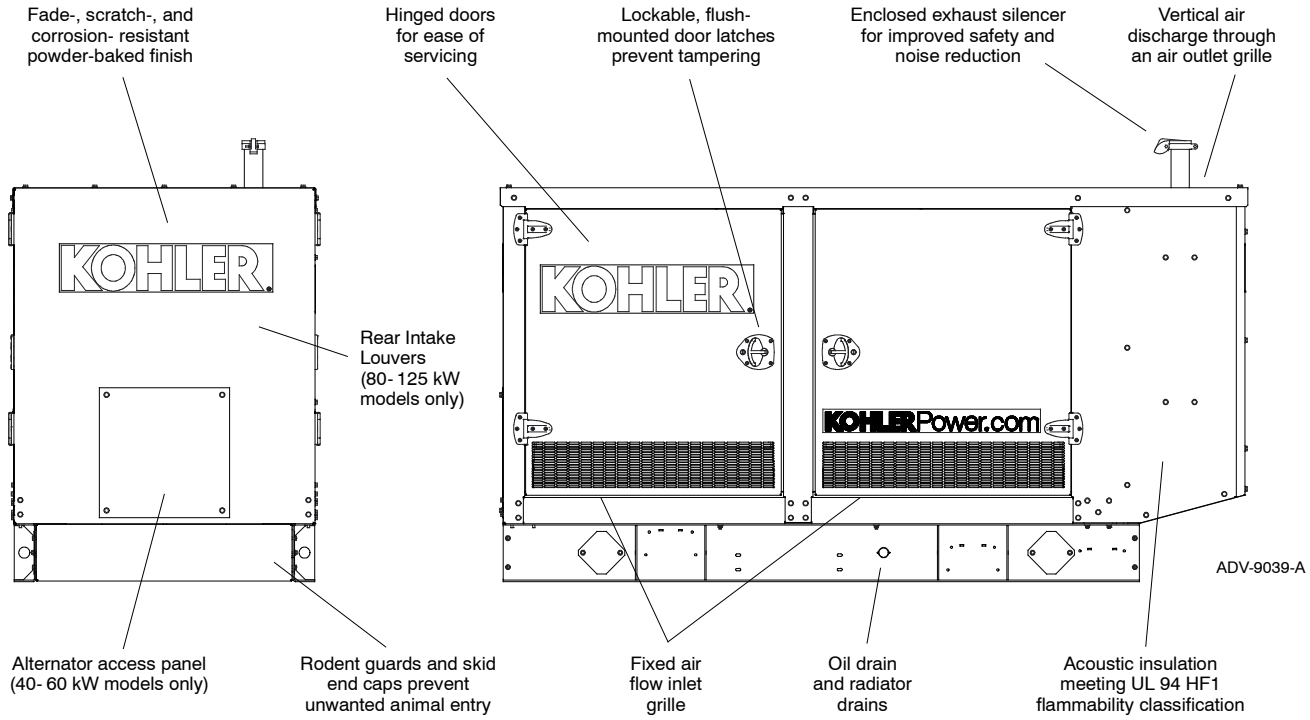

Enclosure ships assembled on generator set skid when ordered installed.

Note: 40- 60 kW shown, other models are similar.

Enclosure Features

- Available in steel (14 gauge) formed panel, solid construction. Preassembled package offering corrosion resistant, dent resilient structure mounting directly to skid.
- Power Armor™ automotive-grade finish resulting in advanced corrosion and abrasion protection as well as enhanced edge coverage and color retention.
- Internal critical exhaust silencer offering maximum component life and operator safety.

  NOTE: Installing an additional length of exhaust tail pipe may increase backpressure levels. Please refer to the generator set spec sheet for the maximum backpressure value.
- Interchangeable modular panel construction. Allows complete serviceability or replacement without compromising enclosure design.
- Cooling/combustion air intake with a horizontal air inlet. Sized for maximum cooling airflow.
- Service access. Multi-personnel doors for easy access to generator set control and servicing of the oil fill and battery.
- Cooling air discharge. Weather protective design featuring a vertical air discharge outlet grille. Redirects cooling air up and above enclosures to reduce noise ambient.
- Enclosed critical silencer and three- way catalyst standard on KG100 and KG125 (optional on KG80).

Additional Sound Enclosure Features

- Available in steel (14 gauge) or aluminum 3.2 mm (0.125 in.) formed panel, solid construction.
- Sound-attenuating design. Mechanically restrained acoustic insulation UL 94 HF1 listed for flame resistance.
- Cooling air discharge. The sound enclosures include acoustic insulation with urethane film.

DISTRIBUTED BY:

© 2018 Kohler Co. All rights reserved.

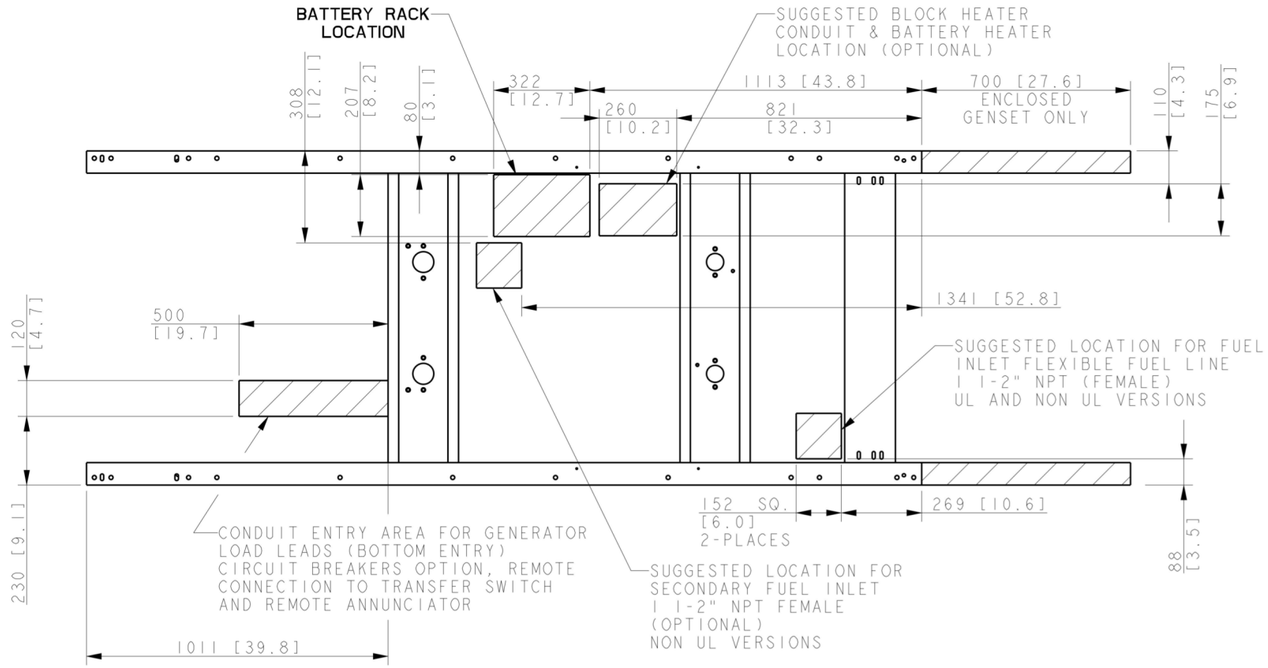

	HORIZONTAL CG A (MM)
KG100	1556 [61.3]
KG125	1519 [59.8]

MODEL	ALTERNATOR	WEIGHT (WET) KG	WEIGHT (WET) LBS
KG100	4R9X, 4R9X 600V	1072	2364
KG100/KG125	4R12X, 4R12X 600V	1140	2514
KG100/KG125	4T13X	1207	2660
KG125	4R13X, 4R13X 600V	1207	2660

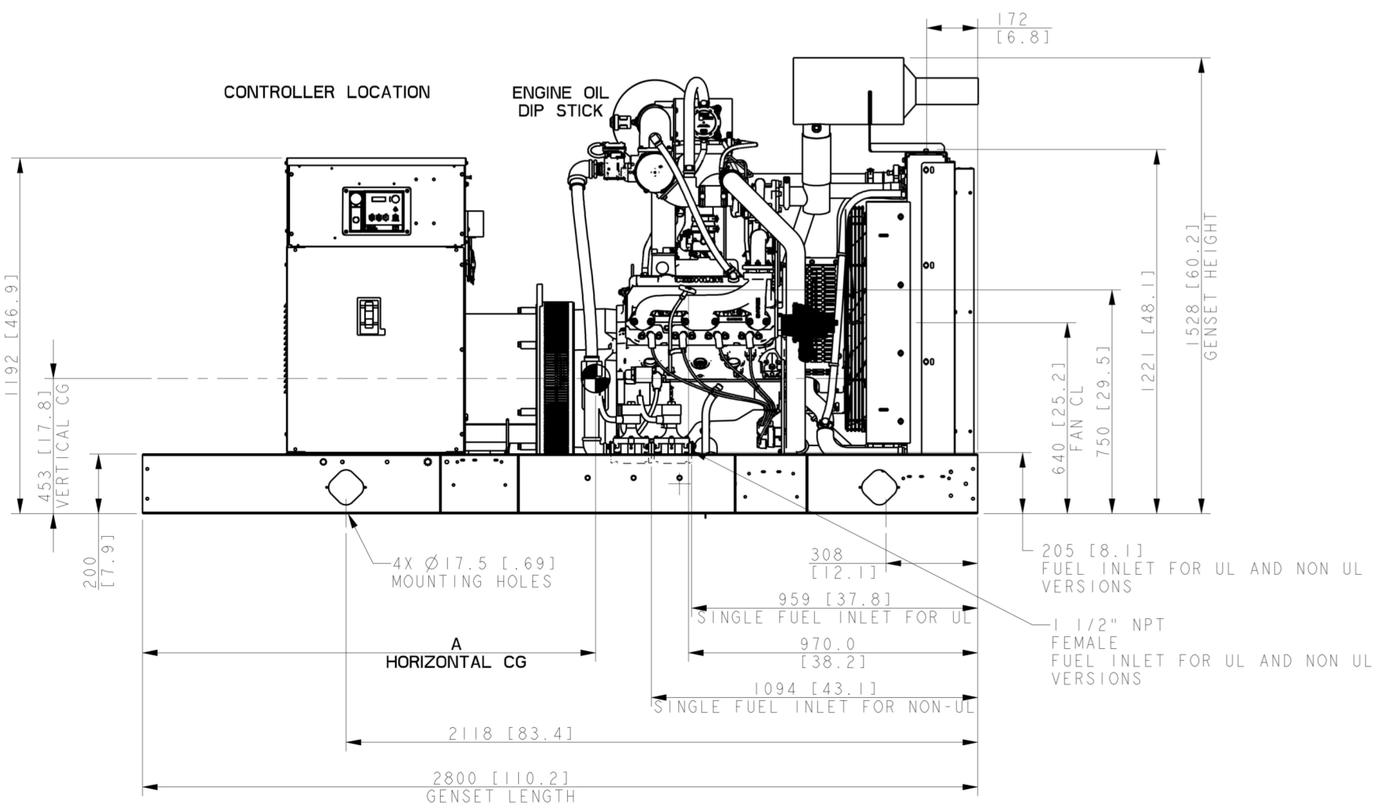

NOTE: OIL DRAIN IS AT LEFT SIDE OF GENSET

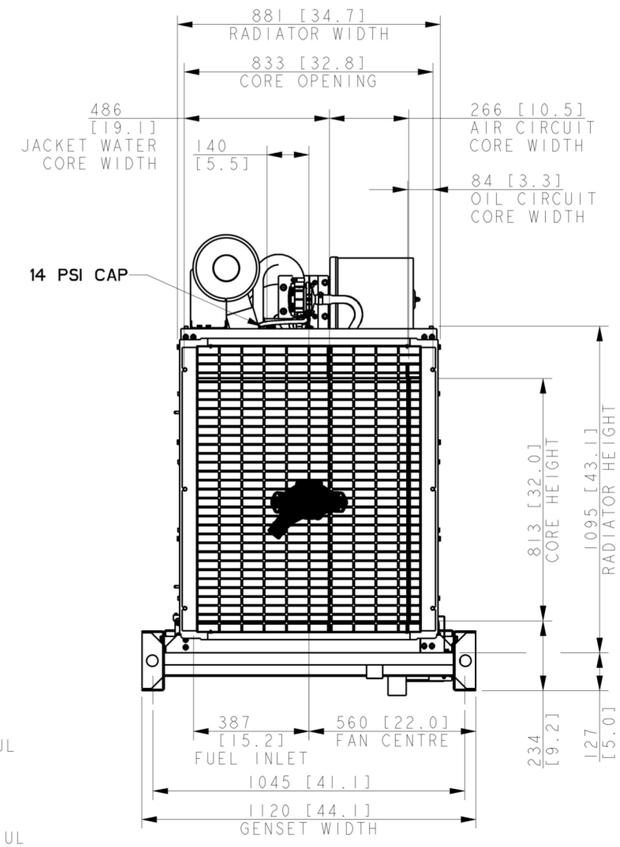

NOTES:

1. DIMENSIONS IN [] ARE ENGLISH STANDARD EQUIVALENTS
2. IF ENCLOSURE IS USED REFER TO ENCLOSURE ADV
3. IF IBC CERTIFICATION IS REQUIRED SEE SEISMIC ADV FOR INSTALLATION INSTRUCTIONS.

REV	DATE	ON COMPOSITE DWGS, SEE PART NO. FOR REVISION LEVEL	BY
-	10-23-18	NEW DRAWING [CT191152]	ADP
A	1-17-19	(A-7) MOUNTING POINT DIMENSION REMOVED [CT193090]	AWK
B	15MAY2019	(C/D-6/7) MODIFIED FUEL INLET LOCATIONS; (A-7) 4X Ø17.5 [.69] MOUNTING HOLES WAS 6X; (A-5) ADDED 'FEMALE' TO FUEL INLET NOTE [CT195808]	AWK
C	03JUN2021	(A-5,6) NOTES UPDATED; (C-5,6) NOTES UPDATED [CT212613]	YPW

DO NOT SCALE. REFERENCE THE MODEL FOR ALL UNSPECIFIED DIMENSIONS

UNLESS OTHERWISE SPECIFIED: ALL DIMENSIONS IN MILLIMETERS GENERAL TOLERANCES: X.XX ± 0.25, X.X ± 1.5, X ± 1.5, ANGLES ± 0°30' SURFACE FINISH 1 MAX.

THIRD ANGLE PROJECTION

APPROVALS		DATE
DRAWN	ADP	10-23-18
CHECKED	DJV	10-23-18
APPROVED	PBT	10-23-18

KOHLER
KOHLER, WISCONSIN 53044

THIS DRAWING IN DESIGN AND DETAIL IS KOHLER CO. PROPERTY AND MUST NOT BE USED EXCEPT IN CONNECTION WITH KOHLER CO. WORK. ALL RIGHTS OF DESIGN OR INVENTION ARE RESERVED.

TITLE: DIMENSION PRINT, KG100/125 6.2L TURBO

SCALE 0.10 | CAD NO. | SHEET 1 of 3

DWG NO. ADV-9080 | D

DIM (MM)	80	100	100/125
A (COB)	1615	1651	1598
B (HEIGHT)	1709	1713	1713

MODEL	ALTERNATOR	GENSET WGT (WET) W/ ENCL			ENCLOSURE ONLY	
			KG	LBS	KG	LBS
KG80	4R9X/4T9X	STEEL WEATHER	1417	3123	391	863
		STEEL SOUND	1427	3146	402	886
		ALUM SOUND	1337	2948	312	688
	4P10X	STEEL WEATHER	1394	3073	391	863
		STEEL SOUND	1404	3096	402	886
		ALUM SOUND	1315	2898	312	688
KG100	4R9X	STEEL WEATHER	1471	3243	399	879
		STEEL SOUND	1492	3290	409	902
		ALUM SOUND	1381	3044	319	704
KG100/125	4R12X	STEEL WEATHER	1539	3393	399	879
		STEEL SOUND	1549	3416	409	902
		ALUM SOUND	1460	3218	319	704
	4R13X/4T13X	STEEL WEATHER	1605	3539	399	879
		STEEL SOUND	1616	3562	409	902
		ALUM SOUND	1515	3340	319	704

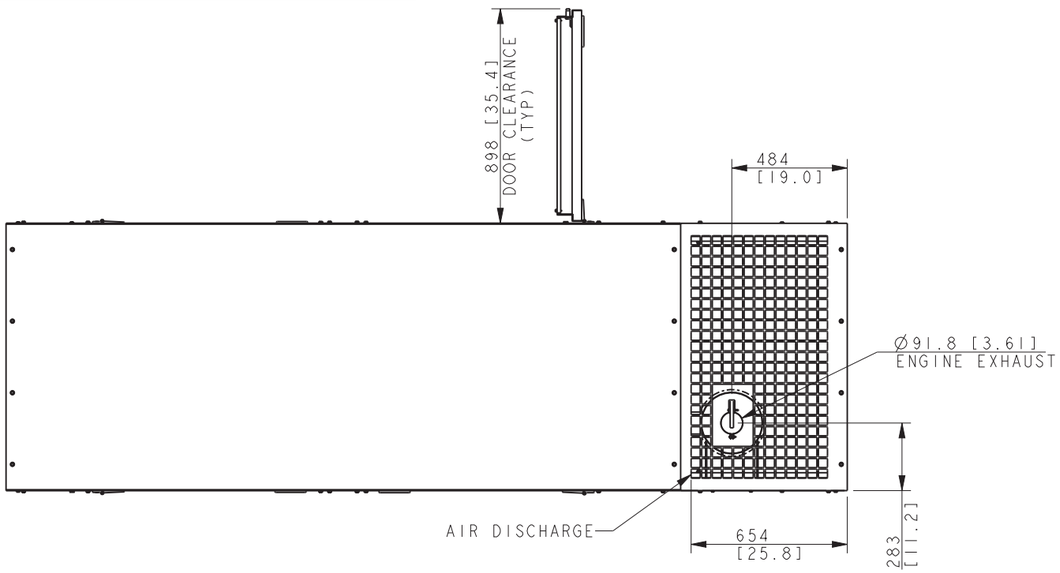

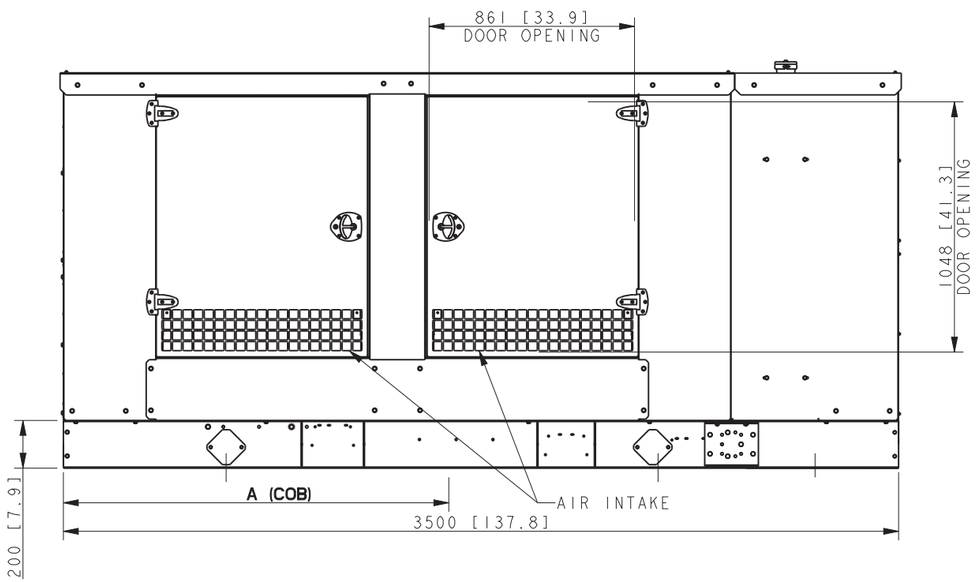

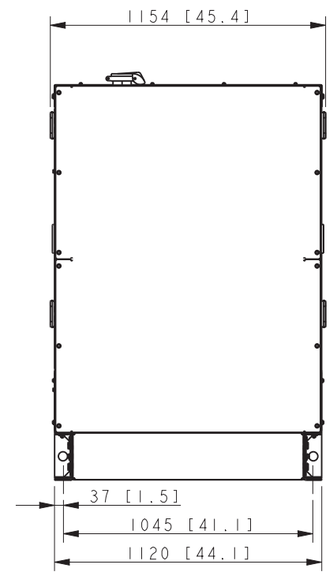

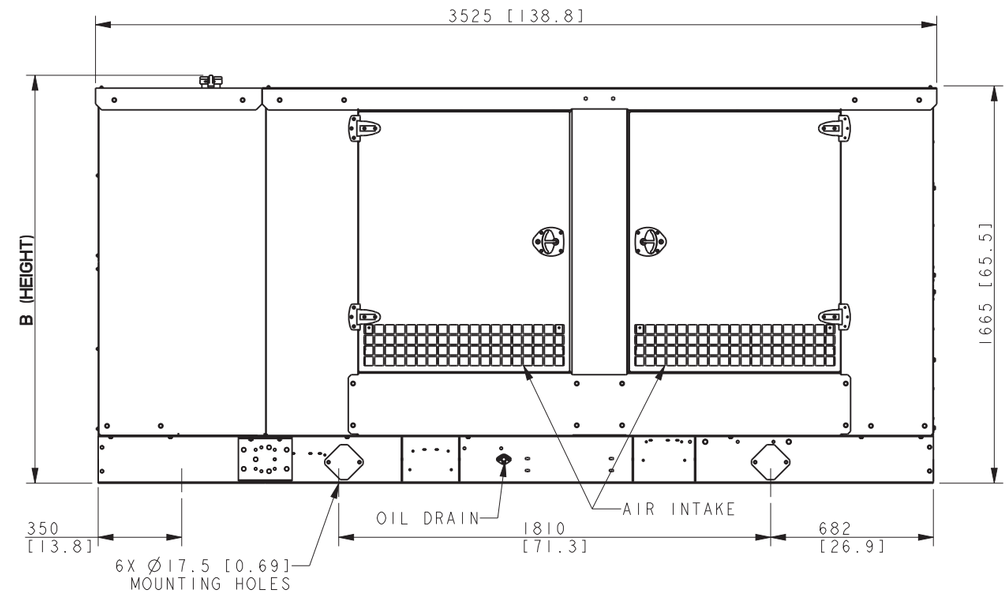

DIMENSIONS IN [] ARE IN ENGLISH EQUIVALENTS.

REV	DATE	ON COMPOSITE DWGS, SEE PART NO. FOR REVISION LEVEL	BY
-	10-23-18	NEW DRAWING [CT191152]	ADP
A	1-16-19	(A-4) NOTE REMOVED; (A-1) MOUNTING POINT DIMENSION REMOVED [CT193090]	AWK
B	14MAY2019	(B-4) 'B' WAS 'D'; (D-8) 'B' ADDED TO TABLE; (A-4) 6X Ø17.5 [0.69] WAS 8X [CT195808]	AWK

DO NOT SCALE. REFERENCE THE MODEL FOR ALL UNSPECIFIED DIMENSIONS

UNLESS OTHERWISE SPECIFIED:
ALL DIMENSIONS IN MILLIMETERS
GENERAL TOLERANCES:
X.XX ± 0.25
X.X ± 1.0
X ± 1.5
ANGLES ± 0°30'
SURFACE FINISH √ MAX.

THIRD ANGLE PROJECTION

APPROVALS		DATE
DRAWN	ADP	10-23-18
CHECKED	DJV	10-23-18
APPROVED	PBT	10-23-18

KOHLER.
KOHLER, WISCONSIN 53044

THIS DRAWING IN DESIGN AND DETAIL IS KOHLER CO. PROPERTY AND MUST NOT BE USED EXCEPT IN CONNECTION WITH KOHLER CO. WORK. ALL RIGHTS OF DESIGN OR INVENTION ARE RESERVED.

TITLE: **DIMENSION PRINT, KG80/100/125 6.2L ENCL.**

SCALE 0.08 | CAD NO. | SHEET 1 of 1

DWG NO. **ADV-9083** | **D**

MINIMUM DOOR CLEARANCE REQUIRED TO DRAWOUT TRANSFER SWITCH

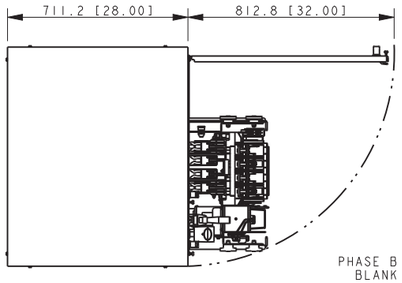

TOP VIEW

SEISMIC MOUNTING NOTES (NEMA 1 ONLY)
FOR SEISMIC CERTIFIED UNITS, MOUNT WITH THE FOLLOWING HARDWARE:
Ø12.70 [.500] BOLT (6)
Ø35.1 [1.38] x 2.77 [.109] THICK WASHER (6)
HARDWARE TO COMPLY WITH SPECIFICATIONS ON ADV-7456.

NOTE:
FOR SEISMIC CERTIFIED UNITS, REFER TO ADV-7456 AND INSTALLATION INSTRUCTIONS.

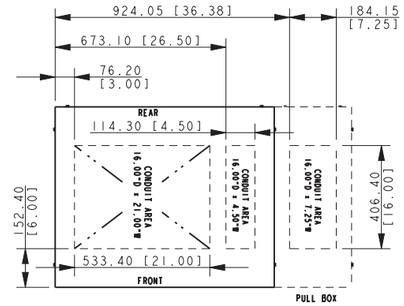

TOP VIEW

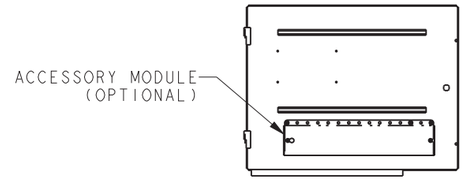

INSIDE UPPER DOOR

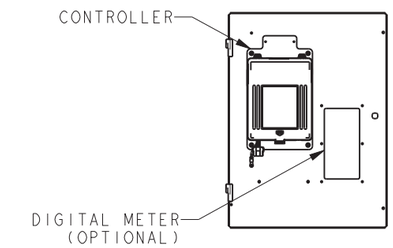

INSIDE MIDDLE DOOR

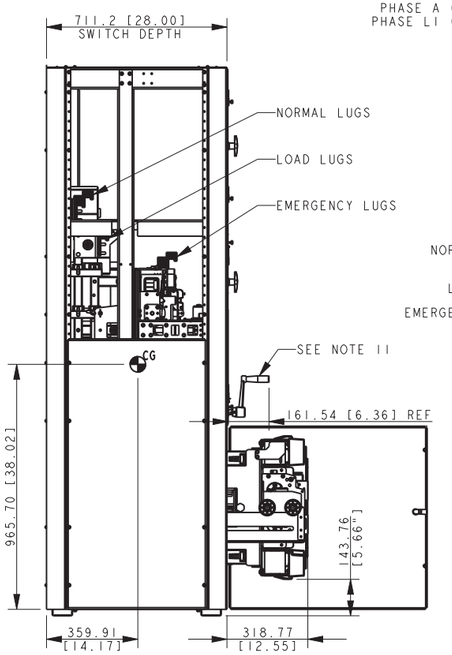

LEFT SIDE VIEW
(TOP COVER REMOVED, TS DRAWN OUT)

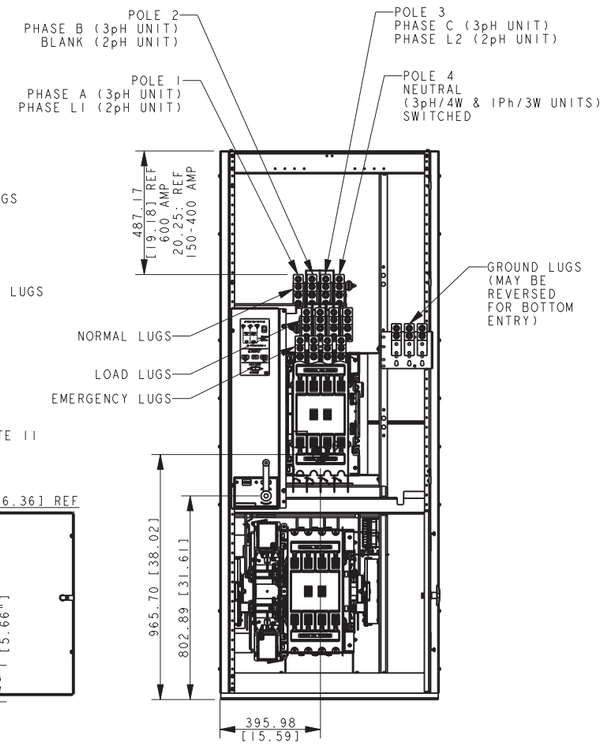

FRONT VIEW
(COVERS AND DOORS REMOVED)

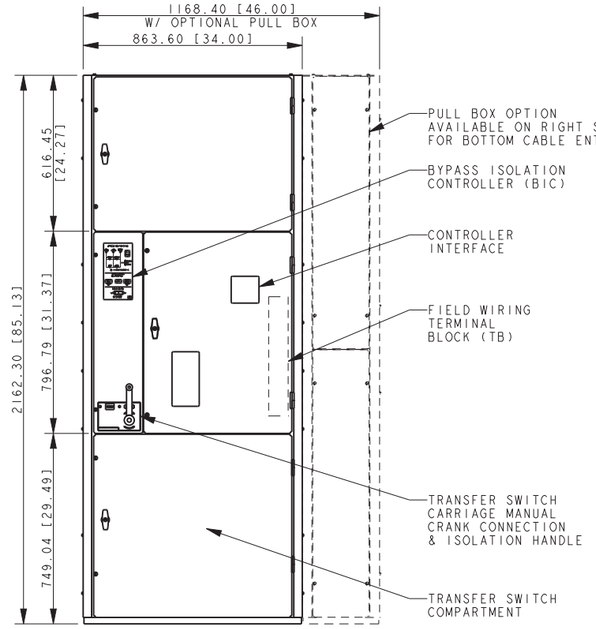

FRONT VIEW
(DOORS INSTALLED)

SIZE	CABLE ACCOMMODATIONS (PER PHASE & NEUTRAL)	LUG TORQUE
150-400	SCREW TYPE (STANDARD)-(2) 1/0-250 MCM AL/CU OR (1) #4-600 MCM AL/CU	500 IN.-LBS
600	SCREW TYPE (STANDARD)-(2) #2-600 MCM AL/CU	375 IN.-LBS

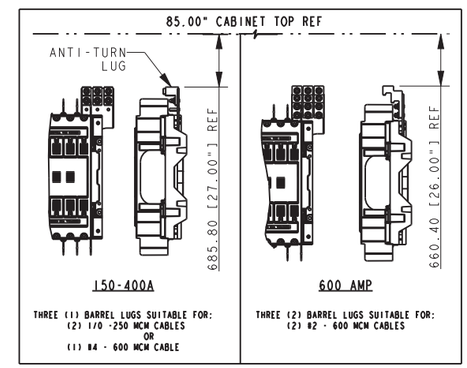

DETAIL A
SOLID NEUTRAL

GENERAL NOTES
1. TYPE 1 ENCLOSURES. FREE STANDING. FLOOR MOUNTED. 12 GAUGE FORMED FRAME CONSTRUCTION.
2. NEC STANDARD GAUGE PAN TYPE DOORS WITH LOCKABLE HANDLES AND REMOVABLE COVERS.
3. FINISH: ANSI 61 GRAY, POLYESTER POWDER. UL RECOGNIZED.
4. CONSTRUCTION IS IN ACCORDANCE WITH UL 1008.
5. PADLOCKING PROVISIONS ARE INCLUDED. ISOLATION HANDLE: THE TRANSFER SWITCH ISOLATION HANDLE MAY BE PADLOCKED WITH THE TRANSFER SWITCH IN THE FULLY ISOLATED (DISCONNECTED POSITION).
6. RECOMMENDED FRONT CLEARANCE: 32 INCHES MINIMUM.
7. A 20% RATED GROUND BUS IS PROVIDED.
8. WHEN PROVIDED THE NEUTRAL IS IN ONE OF THE FOLLOWING FORMATS AS SPECIFIED BY THE CATALOG NO. NEUTRAL TYPE:

   TYPE N OR T: SOLID (COPPER BUS) NEUTRAL
   TYPE V: SWITCHED NEUTRAL POLE
   TYPE W: OVERLAPPING NEUTRAL POLE (NOT AVAILABLE ON PROGRAMMED TRANSITION UNITS)
9. APPROXIMATE WEIGHT: 950 LBS.
10. STANDARD OUTLINE FOR A FOUR POLE 600 AMP TRANSFER SWITCH WITH BYPASS/ISOLATION SWITCH SHOWN. SEE DETAIL "A" FOR LUG CONFIGURATION OF SOLID NEUTRAL.
11. BOTH BYPASS SWITCH MANUAL OPERATION HANDLE & TRANSFER SWITCH CARRIAGE MANUAL CRANK HANDLE CAN BE REMOVED. ALSO NOTE THAT THE TRANSFER SWITCH CARRIAGE MANUAL CRANK HANDLE CAN BE LEFT IN PLACE AND FOLDED DOWN.

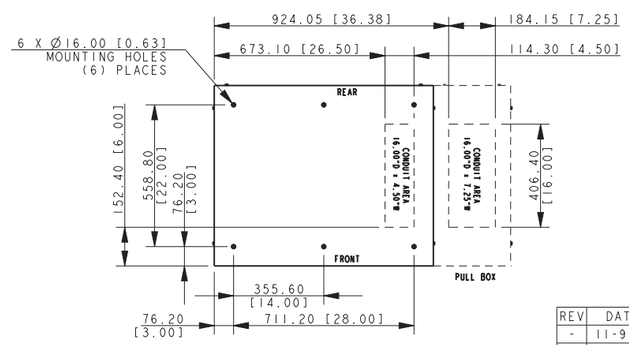

PLAN VIEW

CABLING NOTES
1. ALL SIZES SUPPLIED STANDARD WITH MECHANICAL (SCREW TYPE) LUGS. (SEE AMP SIZE BELOW)
   A. LUG MATERIAL: ALUMINUM ALLOY 6061-T6 WITH ELECTRO TIN PLATED FINISH.
   B. SCREW MATERIAL: ALUMINUM ALLOY 6262-T9 WITH ELECTRO TIN PLATED FINISH.
   C. UL LISTED, CSA CERTIFIED.
   D. LUG MAX WIRE TIGHTENING TORQUE PER UL 486B: SEE TABLE BELOW.
2. OPTIONAL COPPER CRIMP LUGS MAY BE SUPPLIED. CONSULT FACTORY.
   A. LUG MATERIAL: HIGH CONDUCTIVITY WROUGHT COPPER FINISH, ELECTRO TIN PLATED.
   B. UL LISTED, CSA CERTIFIED.
   C. LUG MOUNTING HARDWARE TIGHTENING TORQUE: (REFER TO WITHSTAND CURRENT RATING LABEL PROVIDED ON EACH TRANSFER SWITCH).
   D. SUITABLE WIRE BENDING SPACE IS PROVIDED.
3. GROUND LUGS ARE PROVIDED STANDARD AS FOLLOWS:
   (6) 600MCM AL/CU CABLES FOR 600 AMP
   (3) 600MCM AL/CU CABLES FOR 150-400 AMP.
4. CONSULT FACTORY FOR OTHER TERMINATION REQUIREMENTS.

SEE ADV-8565 FOR FULL MODEL CODE DEFINATION

STYLE	MECHANISUM	TRANSITION	MPAC LOGIC	VOLTS	POLES	NEUTRAL	ENCLOSURE	AMPS	CONNECTION
KAS	BYPASS	STD	1500	208-600	2,3,4	SOLID, SW, OVLP	1,3R,4,4X,12	150,225,260,400,600	STANDARD
KAP	BYPASS	PROG	1500	208-600	2,3,4	SOLID, SW	1,3R,4,4X,12	150,225,260,400,600	STANDARD

REV	DATE	ON COMPOSITE DWGS, SEE PART NO. FOR REVISION LEVEL	BY
-	11-9-20	NEW DRAWING [CT208008]	ZHK

DO NOT SCALE. REFERENCE THE MODEL FOR ALL UNSPECIFIED DIMENSIONS

UNLESS OTHERWISE SPECIFIED:
ALL DIMENSIONS IN MILLIMETERS
GENERAL TOLERANCES:
X.XX ± 0.25
X.X ± 1.0
X ± 1.5
ANGLES ± 0°30'
SURFACE FINISH 125 MAX.

THIRD ANGLE PROJECTION

APPROVALS		DATE
DRAWN	ZHK	9-29-20
CHECKED	MTL	9-29-20
APPROVED	MTL	9-29-20

KOHLER.
KOHLER, WISCONSIN 53044

THIS DRAWING IN DESIGN AND DETAIL IS KOHLER CO. PROPERTY AND MUST NOT BE USED EXCEPT IN CONNECTION WITH KOHLER CO. WORK. ALL RIGHTS OF DESIGN OR INVENTION ARE RESERVED.

TITLE
DIMENSION PRINT

SCALE 0.30 | CAD NO. | SHEET 1 of 3
DWG NO. ADV-9230 | D

THIS PAGE LEFT INTENTIONALLY BLANK

Columbia LIGHTING

DATE:	LOCATION:
TYPE: A1	PROJECT:
CATALOG #: LCAT-24-9-40-MW-G-EDU	

LCAT24

2' × 4' LED CONTEMPORARY ARCHITECTURAL TROFFER

FEATURES

- High efficiency acrylic center lens features linear prisms for high performance without pixelation
- Appropriate for offices, schools, medical, and public spaces
- High performance reflector with matte white paint standard
- LED modules and electrical accessible from below
- Optional architecturally styled integration of daylight and occupancy sensor(s)
- QR code traceability
- Compatible with Dual-Lite inverters

See Certification Specifications

RELATED PRODUCTS

LCAT12 LCAT14 LCAT22

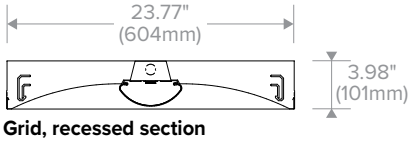

Grid, recessed section

CONTROLS TECHNOLOGY

SpectraSync NX DISTRIBUTED INTELLIGENCE SPECTRASAFE

SPECIFICATIONS

CONSTRUCTION

- Luminaire housing, reflectors and end caps are die-formed code-gauge cold-rolled steel
- High transmission extruded acrylic enclosed lens features linear prisms with custom frost for high efficacy without pixelation
- All reflective surfaces are finished after fabrication with unique formula high-reflectivity matte white paint for soft, uniform indirect illumination

OPTICS

- Removable lens for easy access to LED module and electrical components

INSTALLATION

- An access plate is furnished with each luminaire for fast wiring access without the necessity to open the fixture or wireway
- Luminaire fits recessed exposed Grid ceilings (G); four integral NEC compliant T-bar clips are standard
- Can be placed in Slot Grid (SG) style ceiling with regress ⅜" above ceiling plane
- A Flange Kit (FK) accessory is available for recessed hard ceiling applications
- Surface Mount (SM) option allows placement below ceiling plane
- Cable Mount (CM) option allows suspension below ceiling plane

ELECTRICAL

- 60,000 hour LEDs at L80 for reduced maintenance

ELECTRICAL (CONTINUED)

- 83 CRI standard or optional 90 CRI for color sensitive applications

CONTROLS

- Optional SpectraSync™ offers two modes of Tunable White solutions and integrates seamlessly into a variety of control systems
- NX Distributed Intelligence™ provides options for standalone and networked integrated sensor with wired or wireless connectivity for NX system deployments

TECHNOLOGY

- SpectraSAFE™ is a scalable, cloud-enabled and lighting-based wireless video security solution for interior commercial and industrial applications

CERTIFICATIONS

- IC label is standard for recessed products. Note that IC label is void if product is installed on site with a combination of both battery pack plus through wiring or for air return fixtures
- All luminaires are built to UL1598 and 2108 standards, and bear appropriate cCSAus labels
- CSA certified to UL 924 standards with battery pack or DTS (Dimming Bypass Module) options
- Damp Location label standard
- Adheres to LM79, LM80, and TM21 industry standards

CERTIFICATIONS (CONTINUED)

- DLC® (DesignLights Consortium) Qualified, with some Premium Qualified configurations. Please refer to the DLC website for specific product qualifications at www.designlights.org
- NX is available in U.S., Canada and Mexico. For other locations consult factory
- The DTS, Dimming Bypass Module, is for emergency circuit control loads including sensors and wireless systems CSA certified to UL 924. See page 8 for wiring diagram. Link to Dimming Bypass Module Specification sheet
- This product qualifies as a "designated country construction material" per FAR 52.225-11 Buy American-Construction Materials under Trade Agreements effective 04/03/2020. See Buy American Solutions

WARRANTY

- 5 year warranty
- See HLI Standard Warranty for additional information

KEY DATA	
Lumen Range	2350–8367
Wattage Range	18–63
Efficacy Range (LPW)	119–146
Reported Life (Hours)	L80/60,000

© 2022 Columbia Lighting, a division of Hubbell Lighting, Inc. Specifications subject to change without notice.
701 Millennium Blvd • Greenville, SC 29607 / Tel 864.678.1000 / Website www.columbialighting.com

HUBBELL Lighting

Columbia LIGHTING

LCAT24

2' × 4' LED CONTEMPORARY ARCHITECTURAL TROFFER

DATE:	LOCATION:
TYPE: A1	PROJECT:
CATALOG #: LCAT-24-9-40-MW-G-EDU	

ORDERING GUIDE

Example: LCAT24–35MLG–ESDU

CATALOG # LCAT-24-9-40-MW-G-EDU

LCAT24 –

Model	CRI	Color Temp	Delivered Lumens	Ceiling Type
LCAT24 2' x 4' LED Contemporary Architectural Troffer	**Blank** >80 **9** >90	**30** 3000K **35** 3500K **40** 4000K **50** 5000K **2750T** 2700K–5000K SpectraSync™ Tunable White[1] **2765T** 2700K–6500K SpectraSync™ Tunable White[1]	**XW** 2350–2560 **VW** 2953–3339 **MW** 3205–3626 **LW** 4041–4617 **ML** 4448–5026 **HL** 5065–5786 **VL** 6542–7440 **XL** 4517–8367	**G** Grid Lay-in[2] **SM** Surface Mount[3, 11] **CM** Cable Suspended Mount[3, 4]

–

Shielding	Air Function	Driver
Blank Curve **R** Rectangular	**Blank** Static **A** Air Return Side Slots	**E** Fixed Output **ED** 0–10V Dimming **ED1** 0–10V 1% Dimming **EDD** 0–10V Dim-to-Dark **ESD** Step Dimming[5, 6, 12] **LUTH** Hi-lume 1% EcoSystem LED driver with Soft-on, Fade-to-Black dimming technology[5, 6, 12] **DALIP** DALI Power Bus[6, 12, 15]

–

Voltage	Options	Control Options
U 120–277V **347** 347V[13]	**ELL14** Emergency Battery Pack Installed, 1400 Lumens[6, 7] **ELL14ST** Emergency Battery Pack, 1400 Lumens, Self Test[6, 7] **ELL14H2** Emergency Battery Pack, 2-Hour Run Time[6, 7, 8] **DTS** Dimming Bypass Module[6, 9] **C388** 3-wire Flex[14] **C488** 4-wire Flex[14] **C588** 5-wire Flex[14] **GLR** Fast Blow Fuse **EOR** End of Row (SM and CM only. Provides end wiring access for continuous row mounting.)[3] **INT** Intermediate (SM and CM only. Provides ends with wiring access for continuous row mounting.)[3] **CP** Chicago Plenum **SAF** SpectraSAFE™ Integrated Surveillance Lighting System[10]	**NX Standalone** **NXS** NX, PIR BT Occupancy/Daylight Sensor, Slide Mount[12, 13] **NX Networked – Wired** **NXE** NX, Dual SmartPORTs[13, 14] **NXES** NX, PIR BT Occupancy/Daylight Sensor, Slide Mount, Dual SmartPORTs[12, 13] **NX Networked – Wireless** **NXSW** NX Wireless, PIR BT Occupancy/Daylight Sensor[11, 12, 13] **NXWE** NX Wireless Enabled[11, 12, 13] **NX Networked – Wired/Wireless Hybrid** **NXSWD** NX Wireless, PIR BT Occupancy/Daylight Sensor, Dual SmartPORTs[12, 13] **NXWD** NX Wireless, Dual SmartPORTs[12, 13] **Third-Party Control Options** **ODPG** Occupancy and Daylight Sensors w/ Grouping, Philips SNS200[6, 15, 17] **LVR** Lutron Vive Integral Fixture Control DFCSJ-OEM-RF (RF only)[6, 15, 16, 17] **LVS** Lutron Vive Integral Fixture Control DFCSJ-OEM-OCC (RF with daylight and occupancy sensing)[6,15,16,17]

Accessories	
☐ **FK24**	2' × 4' Single Flange Kit (Shipped separately)
☐ **CM48Y2SC3F-KIT**	48" Cable Mount Kit for 2' wide Cable Mount fixtures, 3-wire

Notes:

1 Available with ED driver and 80 CRI only. Not available with VL or XL lumen outputs
2 For drywall, order G with Flange Kit Accessory
3 Not available with Air Return (A) air function
4 Order hanger accessories separately
5 Limitations apply based on lumen packages (see Product Exceptions & Details)
6 Not available in 347V
7 For compatibility with Dual-Lite LiteGear® inverters, contact Hubbell Lighting Representative
8 Not available for use in Canada
9 For emergency circuit control loads including sensors and wireless systems CSA certified to UL 924. Only available with 0–10V drivers. Universal voltage only. See page 8 for wiring diagram
10 SpectraSync+NX+SAF can not be configured. Only available with NXE, NXWE or NXWD. Not available in 347V

NX In-Fixture Control Options:

11 NXSW, NXWE, NXSWD and NXWD cannot be used with surface mount versions
12 NX is not available with ESD, LUTH, or DALIP driver options
13 NX combined with Spectrasync is not available in 347V
14 For NX control and Flex Wire together, consult factory

Third-Party Control Options:

15 LVS, LVR and ODPG only available with DALIP driver option
16 VIVE is a trademark of Lutron Electronics Co., Inc
17 Not available with SpectraSync (2750T or 2765T)

For questions about configuration options, contact Hubbell Representative

© 2022 Columbia Lighting, a division of Hubbell Lighting, Inc. Specifications subject to change without notice.
701 Millennium Blvd • Greenville, SC 29607 / Tel 864.678.1000 / Website www.columbialighting.com

HUBBELL Lighting

Columbia LIGHTING

LCAT24

2' × 4' LED CONTEMPORARY ARCHITECTURAL TROFFER

DATE:	LOCATION:
TYPE: A1	PROJECT:
CATALOG #: LCAT-24-9-40-MW-G-EDU	

PRODUCT EXCEPTIONS & DETAILS

Driver options listed below are available for the outputs as shown.

DRIVER AVAILABILITY TABLE								
	XW	VW	MW	LW	ML	HL	VL	XL
E	X	X	X	X	X	X	X	X
ED	X	X	X	X	X	X	X	X
ED1	X	X	X	X	X	X	X	X
EDD		X	X	X	X	X		
ESD				X	X	X	X	X
LUTH	X	X	X	X	X	X		
DALIP		X	X	X	X	X	X	X
347	X	X	X	X	X	X		X

CONTROLS

NX Distributed Intelligence™ Lighting Controls:

Supports both indoor and outdoor applications in a variety of deployment options- wired, wireless, hybrid.
Integrates with and enables a wide array of luminaires including those with SpectraSync™ Color Tuning Technology.

NX DISTRIBUTED™ INTELLIGENCE

NX INTEGRATED CONTROLS REFERENCE								
NX Option	Sensor	Networkable	Scheduling	Occupancy	Daylight Harvesting	0–10V Dimming	On/off Control	Bluetooth® App Programming
NX Standalone								
NXS	NXSMP-SMI	No	Yes	Yes	Yes	Yes	Yes	Yes
NX Networked – Wired								
NXE	N/A	Yes	Yes	No	No	Yes	Yes	Requires NXBTC/R[1]
NXES	NXSMP-SMI	Yes	Yes	Yes	Yes	Yes	Yes	Yes
NX Networked – Wireless								
NXSW	NXSMP-SMI	Yes	Yes	Yes	Yes	Yes	Yes	Yes
NXWE	N/A	Yes	Yes	No	No	Yes	Yes	No[2]
NX Networked – Wired/Wireless								
NXSWD	NXSMP-SMI	Yes	Yes	Yes	Yes	Yes	Yes	Yes
NXWD	N/A	Yes	Yes	No	No	Yes	Yes	Requires NXBTC/R[1,2]

1 NXBTC/R needs to be plugged into an available NX SmartPORT™ on the fixture network
2 To program NXWE option, need to consult factory. If connected to an area controller, programming can be done from that

Philips EasySense Controls ODPG Sensor:

- Occupancy sensing, daylight harvesting, task tuning and grouping in one device
- Standalone control or grouping to wireless switches[1]
- Uses Philips field apps for on site commissioning[2,3]
- Ability to create scenes for various room configurations
- Cost-effective solution for energy-savings and code-compliancy strategies
- DLC® Qualified: Listed on the QPL for Networked Lighting Controls. Please refer to the DLC website for specific product qualifications at www.designlights.org

1 Wireless switches only compatible with ODPG Philips EasySense
2 See link to Philips commssioning
3 Requires android device or IR dongle. See links for phone compatiblity and IR dongle

Wireless Switch Accessories[1]

- ☐ PESR-WH — EasySense compatible wireless single rocker switch, white
- ☐ PEDR-WH — EasySense compatible wireless dual rocker switch, white

NX Design & Application Guide
NX Brochure
Philips SNS200
EasySense Design-in Guide

© 2022 Columbia Lighting, a division of Hubbell Lighting, Inc. Specifications subject to change without notice.
701 Millennium Blvd • Greenville, SC 29607 / Tel 864.678.1000 / Website www.columbialighting.com

HUBBELL Lighting

CONTROLS (CONTINUED)

SpectraSAFE™ Integrated Surveillance Lighting System

SPECTRASAFE

Technical Features
- High resolution 1080p full HD camera
- 2.8mm lens / 140° field of view
- IR emitter for low / no-light conditions
- Multiple wiring configurations available
- Supports 2-way audio communication
- Supports 2.4GHz WPA-PSK/WPA2-PSK Wi-Fi
- Data encrypted using AES 256 standard
- Low power consumption (2-5W)
- Transmissions secured using Open TLS / SSL

Software & Support
- Free Android, iOS and web-based app
- Versatile and supports multiple applications
- Multi-tenant web-based camera application
- Phone and in-app chat technical support
- Scalable cloud services and video storage
- Supported by a 5-year warranty

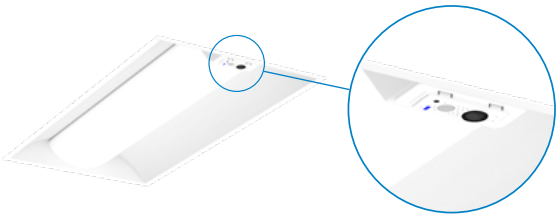

SPECTRASAFE WIRING DIAGRAM

Power Supply Pin Connections	
Pin#	Single
1	VAC in (N)
5	VAC in (L)
7	+Vout
9	-Vout

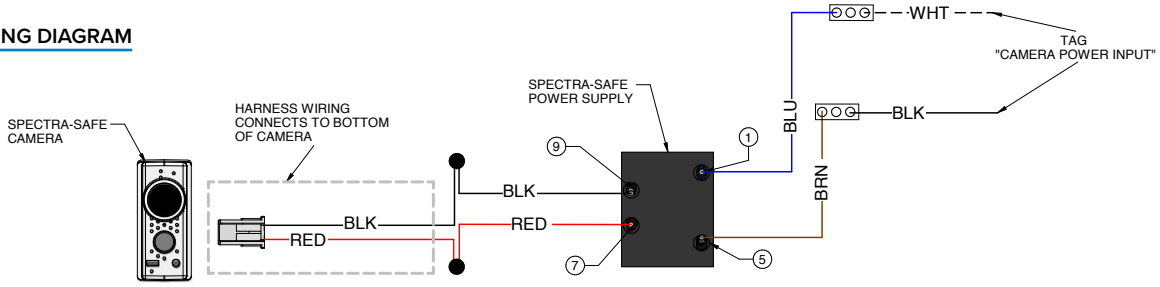

SpectraSync™ Color Tuning Technology:

Control your space based on the needs of the application, specific activities throughout the day and preferences of the occupants with distinct SpectraSync™ Color Tuning Technologies.

SpectraSync Color Tuning Technology

SPECTRASYNC COLOR TUNING TECHNOLOGY		
Mode	Kelvin Range	Description
Tunable White	2700K–5000K 2700K–6500K	Offers users the ability to tailor CCT to their personal preference, enhancing task visibility, material and colors or the aesthetics of the space

SpectraSync Tunable White

Available in two options: 2750T (2700K–5000K) or 2765T (2700K–6500K). Requires two 0–10V controllers, one for intensity and one for CCT. Minimum 5% dimming.

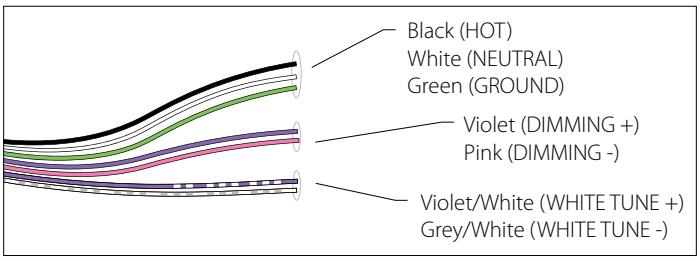

SpectraSync Tunable White luminaires are provided with two 0–10V circuits. The violet and pink circuit is for wiring to any qualified 0–10V controller for dimming. The violet/white and grey/white circuit is for wiring to any qualified 0–10V controller for Tunable White CCT control.

Controller Manufacturer Data

SpectraSync Tunable White was designed to be used with sinking style dimmers (provided by others) and is compatible with:
- Hubbell Control Solutions (HCS): NX Distributed Intelligence™ Room Controllers (NXRC) and In-fixture Controllers (NXFM)
- Lutron: DVTV, DVSTV, and NFTV dimmers
- Wattstopper: ADF120277 and CD4BL (Titan) dimmers

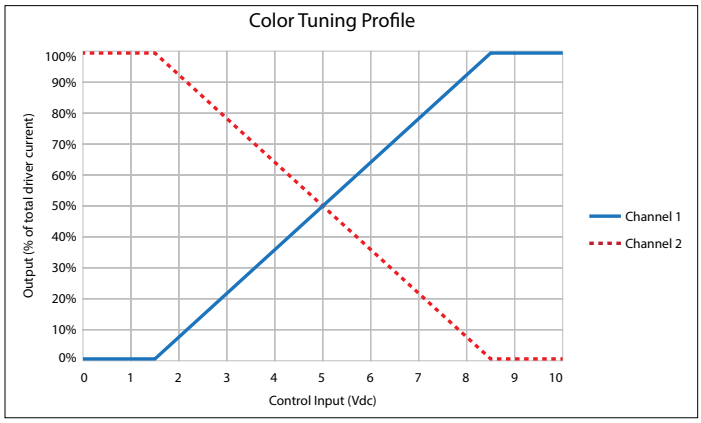

To enable scheduling and for use with NX wall control preset stations please refer to Hubbell Control Solutions NX SpectraSync technical sheet.

SpectraSAFE Brochure
SpectraSync
NX Solutions Guide

© 2022 Columbia Lighting, a division of Hubbell Lighting, Inc. Specifications subject to change without notice.
701 Millennium Blvd • Greenville, SC 29607 / Tel 864.678.1000 / Website www.columbialighting.com

HUBBELL Lighting

Columbia LIGHTING

LCAT24

2' × 4' LED CONTEMPORARY ARCHITECTURAL TROFFER

DELIVERED LUMENS, SPECTRASYNC™

SpectraSync™ Color Tuning Technology

Shielding	Lumen Output	Watts	2700		3000		3500		4000		5000		6500	
			Lumens	LPW	Lumens	LPW	Lumens	LPW	Lumens	LPW	Lumens	LPW	Lumens	LPW
Curve	XW	19	2240	117	2341	123	2383	125	2414	126	2493	131	2456	129
	VW	28	2990	108	3124	113	3180	115	3221	117	3327	121	3277	119
	MW	30	3218	107	3363	111	3424	113	3467	115	3582	119	3528	117
	LW	36	4084	113	4268	118	4345	120	4400	122	4545	126	4477	124
	ML	39	4566	118	4771	123	4857	125	4919	127	5081	131	5005	129
	HL	44	5209	118	5443	124	5541	126	5612	128	5797	132	5710	130
Rectangle	XW	20	2489	123	2601	128	2648	130	2682	132	2770	136	2728	134
	VW	28	3085	109	3224	114	3282	116	3324	118	3434	122	3382	120
	MW	30	3323	110	3472	115	3534	117	3580	119	3698	122	3642	121
	LW	36	4230	117	4420	122	4500	125	4557	126	4707	130	4637	128
	ML	39	4711	121	4923	127	5012	129	5076	131	5243	135	5164	133
	HL	43	5295	123	5533	128	5633	131	5705	132	5893	137	5804	135

DELIVERED LUMENS

(View 90 CRI data on supplemental document)

Product Availability 80 CRI					
Lumen Package	Shielding	Color	Lumens	Input Watts	LPW
XW		3000K	2448	18.7	131
		3500K	2532	18.7	135
		4000K	2560	18.7	137
		5000K	2560	18.7	137
	R	3000K	2350	18.6	126
		3500K	2532	18.7	135
		4000K	2560	18.7	137
		5000K	2560	18.7	137
VW		3000K	3112	24.3	128
		3500K	3303	24.3	136
		4000K	3339	24.3	138
		5000K	3339	24.3	138
	R	3000K	2953	24.3	122
		3500K	3135	24.3	129
		4000K	3169	24.3	130
		5000K	3169	24.3	130
MW		3000K	3379	26.4	128
		3500K	3587	26.4	136
		4000K	3626	26.4	137
		5000K	3626	26.4	137
	R	3000K	3205	26.5	121
		3500K	3402	26.5	128
		4000K	3439	26.5	130
		5000K	3439	26.5	130
LW		3000K	4302	32.1	134
		3500K	4567	32.1	142
		4000K	4617	32.1	144
		5000K	4617	32.1	144
	R	3000K	4041	32.2	125
		3500K	4290	32.2	133
		4000K	4337	32.2	135
		5000K	4337	32.2	135

Product Availability 80 CRI (continued)					
Lumen Package	Shielding	Color	Lumens	Input Watts	LPW
ML		3000K	4683	36.0	130
		3500K	4971	36.0	138
		4000K	5026	36.0	140
		5000K	5026	36.0	140
	R	3000K	4448	36.1	123
		3500K	4722	36.1	131
		4000K	4774	36.1	132
		5000K	4774	36.1	132
HL		3000K	5391	39.7	136
		3500K	5723	39.7	144
		4000K	5786	39.7	146
		5000K	5786	39.7	146
	R	3000K	5065	39.8	127
		3500K	5377	39.8	135
		4000K	5436	39.8	137
		5000K	5436	39.8	137
VL		3000K	6933	52.9	131
		3500K	7358	52.9	139
		4000K	7440	52.9	141
		5000K	7440	52.9	141
	R	3000K	6542	53.1	123
		3500K	6942	53.1	131
		4000K	7019	53.1	132
		5000K	7019	53.1	132
XL		3000K	7798	63.0	124
		3500K	8273	63.0	131
		4000K	8367	63.0	133
		5000K	8367	63.0	133
	R	3000K	7517	63.0	119
		3500K	7894	62.9	126
		4000K	7894	62.9	126
		5000K	7517	62.9	120

© 2022 Columbia Lighting, a division of Hubbell Lighting, Inc. Specifications subject to change without notice.
701 Millennium Blvd • Greenville, SC 29607 / Tel 864.678.1000 / Website www.columbialighting.com

HUBBELL Lighting

Columbia LIGHTING

LCAT24

2' × 4' LED CONTEMPORARY ARCHITECTURAL TROFFER

DATE:	LOCATION:
TYPE: A1	PROJECT:
CATALOG #: LCAT-24-9-40-MW-G-EDU	

DIMENSIONS

GRID

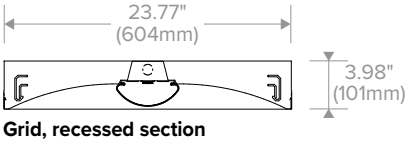

Grid, recessed section

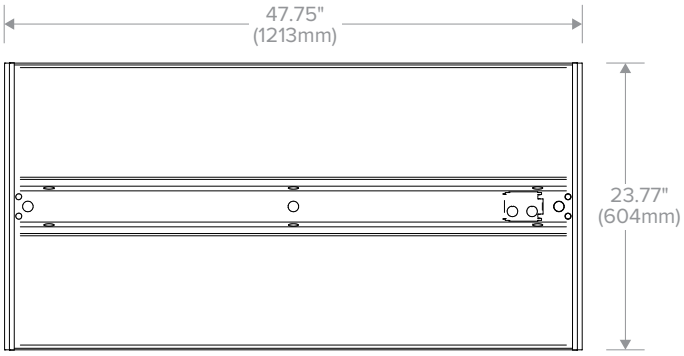

Grid, back of housing

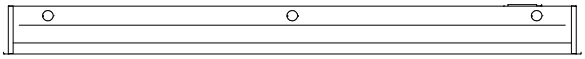

GRID, STATIC

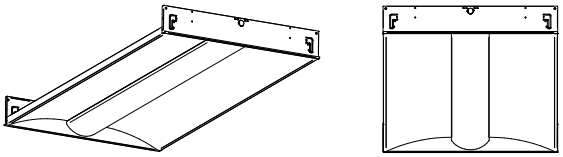

GRID, AIR RETURN

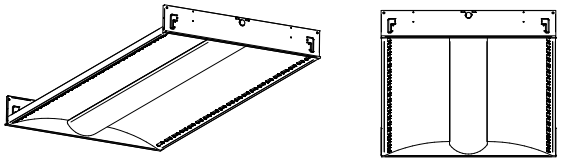

CEILING COMPATIBILITY

Type G

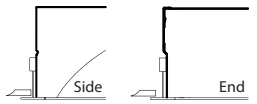

For lay-in installation in exposed grid ceilings. Maximum tee widths of 1" and maximum tee heights of 2" allowed.

FK24 Flange Kit

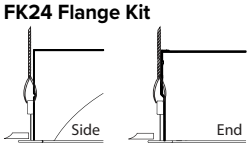

For hard ceiling applications, order FK24 flange kit. Flange kit wires directly into concealed ceiling opening for a clean, finished appearance.

FKCR

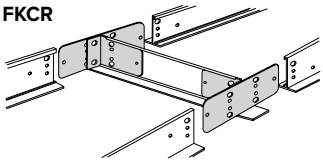

For flanged fixtures in row configurations, the FKCR adapter bracket kit is required in addition to the FK24 kit. Order one less FKCR than the total number of fixtures in row. (Example: Row of two, order (2) FK24 & (1) FKCR)

Row cut out dimensions using FK24s & FKCR adapters:
Width 24⅜", Length [48" × (# in row)] + ⅜".
Example: (48" × 2) + ⅜" = 96⅜"

Flange kit cut out dimension for single unit only: 24⅜" × 48⅜"

SURFACE MOUNT OR CABLE MOUNT, STATIC ONLY

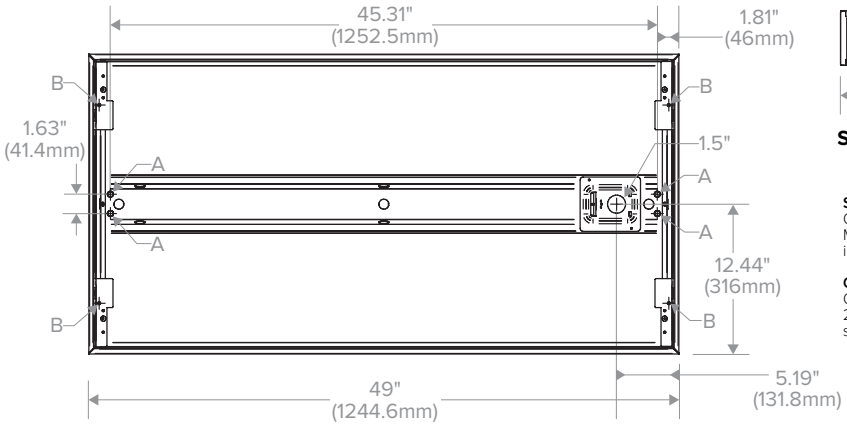

Surface Mount (SM) and Cable Mount (CM), back of housing

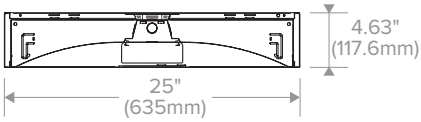

Surface section (SM)

Surface Mount:
Order SM ceiling type. Mounting collar required for surface mounting. (4) Mounting knock-outs, 3/8", provided in center channel as indicated at left, marked A.

Cable Mount:
Order CM ceiling type. Use CM48Y2SC3F-KIT 48" Cable Mount Kit for 2' wide CM trim fixtures. Mounting holes are provided in diagonal straps shown at left, marked B.

* For Cable Mount a 2" x 3" access plate with (4) **⅞"** KOs provided in place of Mounting Collar shown.

NOTE: All dimensions are in inches; dimensions and specifications are subject to change without notice. Please consult factory or check sample for verification.

© 2022 Columbia Lighting, a division of Hubbell Lighting, Inc. Specifications subject to change without notice.
701 Millennium Blvd • Greenville, SC 29607 / Tel 864.678.1000 / Website www.columbialighting.com

HUBBELL Lighting

Columbia LIGHTING

LCAT24

2' × 4' LED CONTEMPORARY ARCHITECTURAL TROFFER

DATE:	LOCATION:
TYPE: A1	PROJECT:
CATALOG #: LCAT-24-9-40-MW-G-EDU	

PHOTOMETRY

LCAT24-35LWG-EU

LUMINAIRE DATA

Test No.	**16519**
Description	**2' x 4' LED architectural troffer with frosted linear prismed lens**
Delivered Lumens	**4396**
Watts	**36.10**
Efficacy	**122**
Mounting	**Recessed**
Spacing Criterion	**0° = 1.22 90° = 1.32**

ZONAL LUMEN SUMMARY

Zone	Lumens	% Luminaire
0–30	1098	25
0–40	1804	41
0–60	3240	73.7
0–90	4396	100
0–180	4396	100

POLAR GRAPH

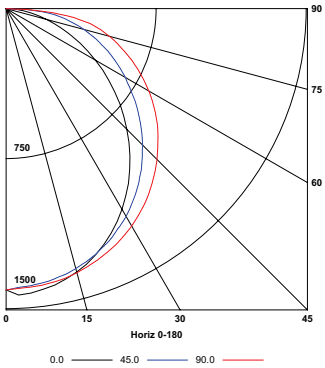

LCAT24-35MLG-EU

LUMINAIRE DATA

Test No.	**16522**
Description	**2' x 4' LED architectural troffer with frosted linear prismed lens**
Delivered Lumens	**4914**
Watts	**38.80**
Efficacy	**127**
Mounting	**Recessed**
Spacing Criterion	**0° = 1.22 90° = 1.30**

ZONAL LUMEN SUMMARY

Zone	Lumens	% Luminaire
0–30	1250	25.4
0–40	2049	41.7
0–60	3648	74.2
0–90	4914	100
0–180	4914	100

POLAR GRAPH

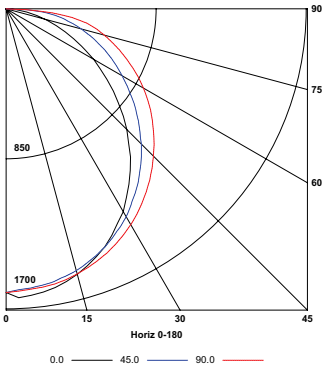

LCAT24-35HLG-EU

LUMINAIRE DATA

Test No.	**16525**
Description	**2' x 4' LED architectural troffer with frosted linear prismed lens**
Delivered Lumens	**5607**
Watts	**44.00**
Efficacy	**127**
Mounting	**Recessed**
Spacing Criterion	**0° = 1.22 90° = 1.31**

ZONAL LUMEN SUMMARY

Zone	Lumens	% Luminaire
0–30	1422	25.4
0–40	2333	41.6
0–60	4161	74.2
0–90	5607	100
0–180	5607	100

POLAR GRAPH

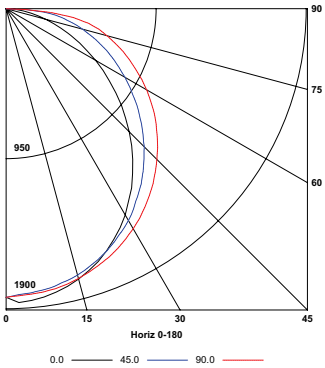

ADDITIONAL INFORMATION

DTS WIRING DIAGRAM (0–10V DIMMING DRIVER SHOWN)

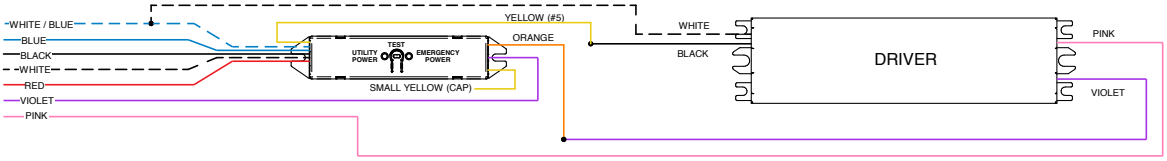

WHITE/BLUE	Emergency Neutral
BLUE	Emergency Line
BLACK	Utility Line (Unswitched Hot)
WHITE	Utility Neutral
RED	Switched Hot
VIOLET	Dimming
PINK	Dimming

All product and company names, logos and product identifiers are trademarks ™ or registered trademarks ® of Hubbell Lighting, Inc. or their respective owners. Use of them does not necessarily imply any affiliation with or endorsement by such respective owners.

© 2022 Columbia Lighting, a division of Hubbell Lighting, Inc. Specifications subject to change without notice.
701 Millennium Blvd • Greenville, SC 29607 / Tel 864.678.1000 / Website www.columbialighting.com

HUBBELL Lighting

prescolite

DATE:	LOCATION:
TYPE: C1	PROJECT:
CATALOG #:	

LTR-6RD (SH)

LITEISTRY 6" ROUND NON-CONDUCTIVE SHOWER DOWNLIGHT

LITEISTRY™

PHOTOMETRY

DIMENSIONAL DRAWINGS

FEATURES

- 6" architectural LED downlight delivering 600 – 4000 lm
- Non-conductive dead-front trim
- Available with four regressed lens options
- Suitable for wet locations, covered ceiling
- IP65 rated (room side)
- Anti-microbial finish, optional
- 2700K - 5000K, 80+ and 90+ CRI options
- Available for New Construction (non-IC), IC and Chicago Plenum applications
- Variety of dimming protocol options including 0-10V, DALI, DMX, Lutron Forward Phase and EcoSystem

WET LOCATION

C US

IP65

RELATED PRODUCTS

3" LITEISTRY Family

4" LITEISTRY Family

6" LITEISTRY Family

CONTROL TECHNOLOGY

NX DISTRIBUTED™ INTELLIGENCE

SPECIFICATIONS

CONSTRUCTION

- Standard Non-IC. Chicago Plenum and IC options
- Painted black durable steel platform with pre-installed bar hangers
- Pre-wired junction box with snap-on covers for easy access
- Snap-in connection from driver compartment allows easy installation
- Light Engine connections use plenum rated (CMP) cable

OPTICS

- Durable, non-conductive trim with 1/2" regressed lens
- Lens options include acrylic, polycarbonate, or tempered glass micro-prism, and clear acrylic
- Smooth room side lens surface for easy wipe down
- Available in white, black, or anti-microbial white trim color

ELECTRICAL

- Chip-on-board LED with 2 SDCM
- Multiple CCTs, 80+ or 90+ CRI
- Long LED life: L90 at >55,000 hours (TM-21)
- Universal voltage 120V–277V driver, 347V optional
- UL Class 2, inherent short circuit and overload protection, RoHS compliant
- Flicker free 0-10V dimming with 1% or <1% performance
- DALI, DMX, and Lutron Forward Phase and EcoSystem options
- NX or Lutron Vive control options available
- Remote controller and battery pack option available

INSTALLATION

- Accommodates ceiling thickness up to 2" (SL, ML, HL); up to 1.25" (VL, XL)
- Universal adjustable mounting brackets also accept 0.5" EMT conduit or 1.5" or 0.75" lathing channel (by others) or Prescolite accessory bar hangers (B24 or B6).
- Light Engine/Driver fully serviceable from above or below the ceiling

CERTIFICATIONS

- cCSAus certified to UL 1598
- IP65 rated (room side) when properly installed per installation instructions
- Suitable for wet locations, covered ceiling. EMR: Suitable for damp locations.
- EMR: Certified under UL 924 standard for emergency lighting and power equipment
- Approved for 8 (4 in/4 out) No. 12AWG conductors rated for 90°C through wiring

WARRANTY

- 5 year warranty
- See HLI Standard Warranty for additional information

KEY DATA	
Lumen Range	600-4000
Wattage Range	8-52
Efficacy Range (LPW)	67-70*
Reported Life (Hours)	L90 / >55,000
Input Current (mA)	65-433 (120V)

*Based on 35K, 80 CRI

© 2021 Prescolite, a division of Hubbell Lighting, Inc. Specifications subject to change without notice.
701 Millennium Blvd • Greenville, SC 29607 / Tel 864.678.1000 / Website www.prescolite.com

HUBBELL Lighting

prescolite

DATE:	LOCATION:
TYPE:	PROJECT:
CATALOG #:	

LTR-6RD (SH)

LITEISTRY 6" ROUND NON-CONDUCTIVE SHOWER DOWNLIGHT

ORDERING GUIDE

Example: LTR–6RD–H–SL10L–DM1–LTR–6RD–T–SHSL35K8-WTAML

CATALOG # LTR-6RD-H-ML25L-DM1/LTR-6RD-T-SHML40K8-WTACL

HOUSING

LTR-6RD-H –

Aperture/Shape/Function	
LTR-6RD-H	6" Round Downlight New Construction Housing

–

Lumen Package		Lumen Output	
SL	Standard Lumen	**06L**	600
		10L	1000
		15L	1500
ML	Medium Lumen	**20L**	2000
		25L	2500
		30L	3000
HL	High Lumen	**35L**	3500
		40L	4000

–

Driver Options	
DM1	0-10V Dimming to 1%
DM01	0-10V Dimming to < 1%
DMX	DMX with RDM dimming to < 0.1% [2]
DALI	DALI Dimming to 1%
2DM	Lutron Hi-Lume 2-wire Dimming to 1% (120V Forward Phase only) [2]
EDM	Lutron Hi-Lume EcoSystem Dimming to 1% [2]

Control Options	
NXE	NX Enabled, Dual SmartPorts [3]
NXWE	NX Wireless Enabled [3]
NXWD	NX Wireless Enabled, Dual SmartPorts [3]
LV	Lutron Vive Enabled, 0-10V (requires 0-10V driver)
LVE	Lutron Vive Enabled, EcoSystem, (requires EDM)

Voltage	
Standard 120-277V	
34	347V [5]

–

Housing Options	
CP	Chicago Plenum [6, 8]
IC	IC Rated [6, 9]
EMR	Emergency Battery Pack with remote test switch and indicator light [6]
DTS	Device Transfer Switch with Dimming Bypass [6, 7]
GTD	Generator Transfer Device [6]
F	Fuse [6]

TRIM

LTR-6RD-T –

Aperture/Shape/Function	
LTR-6RD-T	6" Round Downlight Light Engine/Trim Assembly

–

Trim Style	
SH	Non-Conductive Shower Trim

Lumen Package	
SL	Standard Lumen
ML	Medium Lumen
HL	High Lumen

CCT	
27K	2700K
30K	3000K
35K	3500K
40K	4000K
50K	5000K [1]

CRI	
8	80+CRI
9	90+CRI

–

TRIM CONTINUED

–

Trim Color	
WT	White Trim and Flange
BT	Black Trim and Flange

Lens Options	
AML	Acrylic, Micro-prism
PML	Polycarbonate, Micro-prism
GML	Tempered glass, Micro-prism
ACL	Acrylic, Clear

Options	
AM	Antimicrobial [4]

Accessories	
☐ **B24**	Set of two (2) 24" bar hangers for T-bar ceilings
☐ **B6**	Set of two bar hangers for ceiling joist up to 24" centers
☐ **LiteGear**	LiteGear® Inverter, 125VA-250VA
☐ **LPS Series**	LightPower Micro-Inverter, 20VA-55VA

Notes:

1. 5000K available in 80+ CRI only.
2. 2DM, EDM, DMX available in 10L-35L.
3. NX requires DM1 driver option
4. AM available with White (WT) only. Consult factory for other colors.
5. 347V requires DM1 driver option; available 10L-40L; not available with Controls, F, GTD, DTS, EMR.
6. Housing options (except Fuse) not available in combination.
7. DTS available with DM1, DM01, DALI, or EDM; not available with LVE.
8. CP available up to 20L; not available with DMX, Controls, or EMR options.
9. IC available up to 20L; not available with Controls options.

© 2021 Prescolite, a division of Hubbell Lighting, Inc. Specifications subject to change without notice.
701 Millennium Blvd • Greenville, SC 29607 / Tel 864.678.1000 / Website www.prescolite.com

HUBBELL Lighting

prescolite

DATE:	LOCATION:
TYPE:	PROJECT:
CATALOG #:	

LTR-6RD (SH)

LITEISTRY 6" ROUND NON-CONDUCTIVE SHOWER DOWNLIGHT

CONTROLS

NX Distributed Intelligence™ Lighting Controls:
Supports applications in a variety of deployment options- wired, wireless, hybrid. Integrates with and enables a wide array of luminaires including those with SpectraSync™ Color Tuning Technology.

NX DISTRIBUTED™ INTELLIGENCE

NX INTEGRATED CONTROLS REFERENCE								
NX Option	Sensor	Networkable	Scheduling	Occupancy	Daylight Harvesting	0–10V Dimming	On/off Control	Bluetooth® App Programming
NX Networked – Wired								
NXE	N/A	Yes	Yes	No	No	Yes	Yes	Requires NXBTC/R[1]
NX Networked – Wireless								
NXWE[2]	N/A	Yes	Yes	No	No	Yes	Yes	No[3]
NX Networked – Wired/Wireless								
NXWD	N/A	Yes	Yes	No	No	Yes	Yes	Requires NXBTC/R[1,3]

1 NXBTC/R needs to be plugged into an available NX SmartPort™ on the fixture network
2 Programming via App requires factory assistance
3 To program NXWE option, need to consult factory. If connected to an area controller, programming can be done from that

PERFORMANCE DATA TABLE

Performance data provided below is for 3500K, 80 CRI.

Lumen Package	Nominal Lumens	Distribution	Delivered Lumens	Watts	LPW
06L	600	Acrylic Micro-prism	418	7.8	54
		Polycarbonate Micro-prism	400	7.8	51
		Tempered Glass Micro-prism	427	7.8	55
		Acrylic Clear	426	7.8	55
10L	1000	Acrylic Micro-prism	668	12.0	56
		Polycarbonate Micro-prism	640	12.0	53
		Tempered Glass Micro-prism	683	12.0	57
		Acrylic Clear	681	12.0	57
15L	1500	Acrylic Micro-prism	960	18.6	52
		Polycarbonate Micro-prism	919	18.6	49
		Tempered Glass Micro-prism	981	18.6	53
		Acrylic Clear	978	w18.6	53
20L	2000	Acrylic Micro-prism	1320	22.0	60
		Polycarbonate Micro-prism	1263	21.9	58
		Tempered Glass Micro-prism	1348	22.0	61
		Acrylic Clear	1344	22.0	61
25L	2500	Acrylic Micro-prism	1480	27.8	53
		Polycarbonate Micro-prism	1417	27.8	51
		Tempered Glass Micro-prism	1512	27.8	54
		Acrylic Clear	1507	27.8	54
30L	3000	Acrylic Micro-prism	1912	34.6	55
		Polycarbonate Micro-prism	1830	34.6	53
		Tempered Glass Micro-prism	1953	34.6	56
		Acrylic Clear	1947	34.6	56
35L	3500	Acrylic Micro-prism	2323	42.9	54
		Polycarbonate Micro-prism	2222	42.9	52
		Tempered Glass Micro-prism	2372	42.9	55
		Acrylic Clear	2365	42.9	55
40L	4000	Acrylic Micro-prism	2655	51.5	52
		Polycarbonate Micro-prism	2540	51.5	49
		Tempered Glass Micro-prism	2711	51.5	53
		Acrylic Clear	2703	51.5	52

NX Design & Application Guide
NX Brochure

© 2021 Prescolite, a division of Hubbell Lighting, Inc. Specifications subject to change without notice.
701 Millennium Blvd • Greenville, SC 29607 / Tel 864.678.1000 / Website www.prescolite.com

HUBBELL Lighting

prescolite

DATE:	LOCATION:
TYPE:	PROJECT:
CATALOG #:	

LTR-6RD (SH)

LITEISTRY 6" ROUND NON-CONDUCTIVE SHOWER DOWNLIGHT

DIMENSIONS

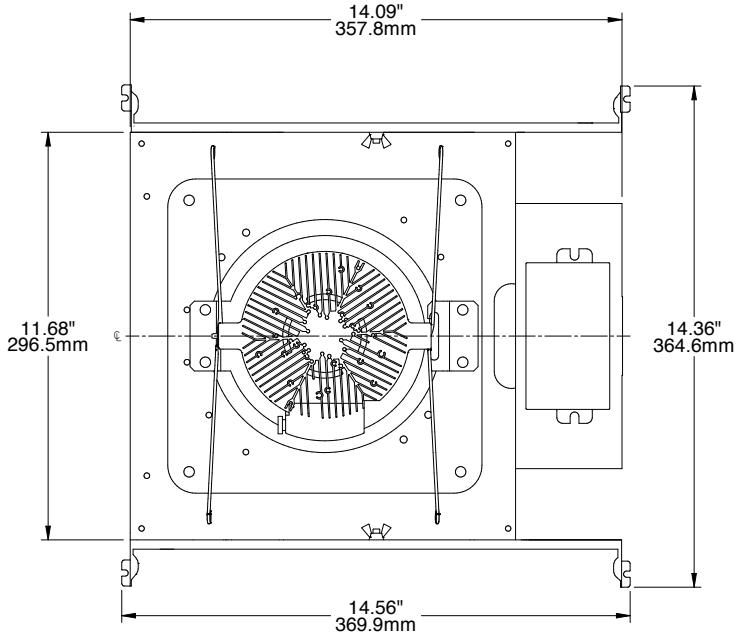

Top View

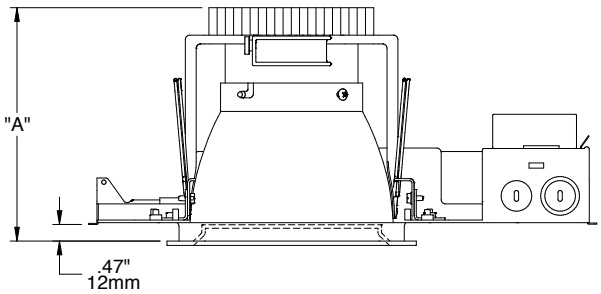

Dimensional Data		
Aperture		5.75" (146.1mm)
Flange	Standard	7.14" (181.5mm)
Ceiling Cutout	Standard	6.50" (165.1mm)
Ceiling Thickness		0.50" to 2.00" (12.7mm to 50.8mm)

Lumen Package	"A"
06L-15L	5.90" (149.9mm)
20L-30L	6.68" (169.7mm)
35L-40L	7.86" (199.6mm)

LTR-6RD-H-SH

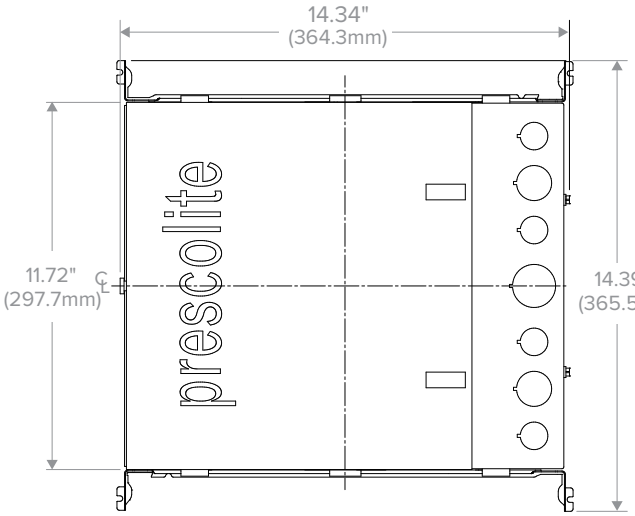

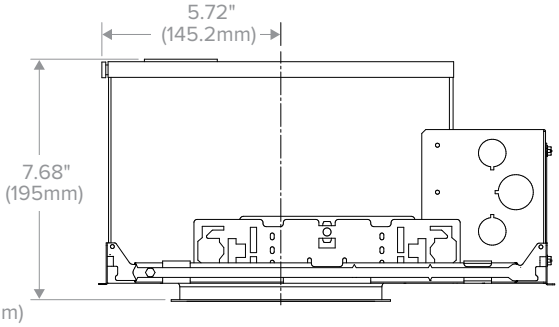

Dimensional Data		
Aperture		5.75" (146.1mm)
Flange	Standard	7.14" (181.5mm)
Ceiling Cutout	Standard	6.50" (165.1mm)
Ceiling Thickness		0.50" to 2.00" (12.7mm to 50.8mm)

LTR-6RD-H-SH (IC/CP)

© 2021 Prescolite, a division of Hubbell Lighting, Inc. Specifications subject to change without notice.

701 Millennium Blvd • Greenville, SC 29607 / Tel 864.678.1000 / Website www.prescolite.com

HUBBELL Lighting

prescolite

DATE:	LOCATION:
TYPE:	PROJECT:
CATALOG #:	

LTR-6RD (SH)

LITEISTRY 6" ROUND NON-CONDUCTIVE SHOWER DOWNLIGHT

PHOTOMETRY

LTR-6RD-H-ML20L-DM1 / LTR-6RD-T-SHML35K8-WTAML

LUMINAIRE DATA

Test No.	**20.01616**
Description	**2000 lm, Acrylic Micro-prism lens, 3500K, 80 CRI**
Delivered Lumens	**1320**
Watts	**22.0W**
Efficacy	**60.1**
Mounting	**Recessed**
Spacing Criterion	**0.6**

ZONAL LUMEN SUMMARY

Zone	Lumens	% Luminaire
0-40	1192	90.3
0-60	1300	98.5
0-90	1320	100.0
0-180	1320	100.0

POLAR GRAPH

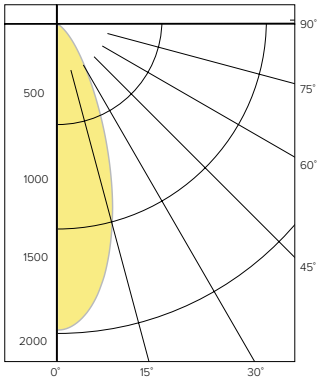

CANDELA DISTRIBUTION

Degree	Candela
0	2482
5	2372
15	1635
25	748
35	284
45	100
55	30
65	12
75	5
85	1
90	0

LUMINANCE DATA*

Vertical Angle	Average
45°	8461
55°	3137
65°	1676
75°	1240
85°	785

*Candela/Square Meter

LTR-6RD-H-ML20L-DM1 / LTR-6RD-T-SHML35K8-WTPML

LUMINAIRE DATA

Test No.	**20.01617**
Description	**2000 lm, Polycarbonate Micro-prism lens, 3500K, 80 CRI**
Delivered Lumens	**1263**
Watts	**22.0W**
Efficacy	**57.6**
Mounting	**Recessed**
Spacing Criterion	**0.6**

ZONAL LUMEN SUMMARY

Zone	Lumens	% Luminaire
0-40	1145	90.6
0-60	1246	98.7
0-90	1263	100.0
0-180	1263	100.0

POLAR GRAPH

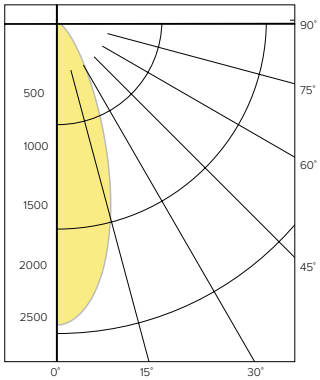

CANDELA DISTRIBUTION

Degree	Candela
0	2406
5	2299
15	1579
25	714
35	271
45	95
55	27
65	10
75	5
85	1
90	0

LUMINANCE DATA*

Vertical Angle	Average
45°	7983
55°	2849
65°	1463
75°	1059
85°	757

*Candela/Square Meter

LTR-6RD-H-ML20L-DM1 / LTR-6RD-T-SHML35K8-WTGML

LUMINAIRE DATA

Test No.	**20.01618**
Description	**2000 lm, Tempered Glass Micro-prism lens, 3500K, 80 CRI**
Delivered Lumens	**1349**
Watts	**22.0W**
Efficacy	**61.4**
Mounting	**Recessed**
Spacing Criterion	**0.6**

ZONAL LUMEN SUMMARY

Zone	Lumens	% Luminaire
0-40	1227	91.0
0-60	1330	98.7
0-90	1349	100.0
0-180	1349	100.0

POLAR GRAPH

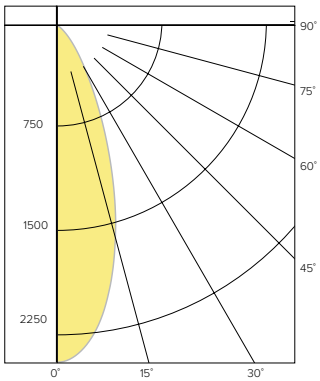

CANDELA DISTRIBUTION

Degree	Candela
0	2647
5	2520
15	1695
25	762
35	282
45	96
55	28
65	11
75	5
85	1
90	0

LUMINANCE DATA*

Vertical Angle	Average
45°	8090
55°	2880
65°	1605
75°	1248
85°	722

*Candela/Square Meter

© 2021 Prescolite, a division of Hubbell Lighting, Inc. Specifications subject to change without notice.
701 Millennium Blvd • Greenville, SC 29607 / Tel 864.678.1000 / Website www.prescolite.com

HUBBELL Lighting

prescolite

LTR-6RD (SH)

LITEISTRY 6" ROUND NON-CONDUCTIVE SHOWER DOWNLIGHT

DATE: LOCATION:

TYPE: PROJECT:

CATALOG #:

PHOTOMETRY CONTINUED

LTR-6RD-H-ML20L-DM1 / LTR-6RD-T-SHML35K8-WTACL

LUMINAIRE DATA

Test No.	**20.01619**
Description	**2000 lm, Acrylic Clear lens, 3500K, 80 CRI**
Delivered Lumens	**1344**
Watts	**22.0W**
Efficacy	**61.2**
Mounting	**Recessed**
Spacing Criterion	**0.6**

POLAR GRAPH

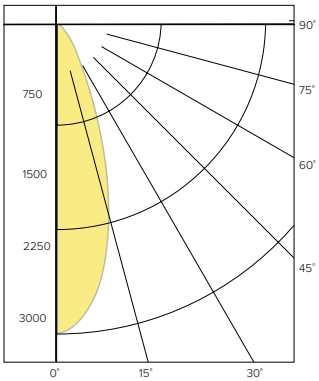

CANDELA DISTRIBUTION

Degree	Candela
0	2967
5	2816
15	1856
25	726
35	275
45	63
55	8
65	5
75	3
85	1
90	0

LUMINANCE DATA*

Vertical Angle	Average
45°	5305
55°	858
65°	671
75°	588
85°	498

*Candela/Square Meter

ZONAL LUMEN SUMMARY

Zone	Lumens	% Luminaire
0-40	1275	94.9
0-60	1336	99.4
0-90	1344	100.0
0-180	1344	100.0

LUMEN MULTIPLIER

Option	27K8	30K8	35K8	40K8	50K8	27K9	30K9	35K9	40K9
Multiplier	0.94	0.98	1.00	1.01	1.02	0.81	0.84	0.85	0.85

Photometrics are published below at a nominal 3500 Kelvin, 80+ CRI. This table may be used to approximate the lumen values at different Kelvin temperatures. Power consumption would stay the same.

TM-30 DATA

COLOR VECTOR GRAPHIC 3500K, 90 CRI

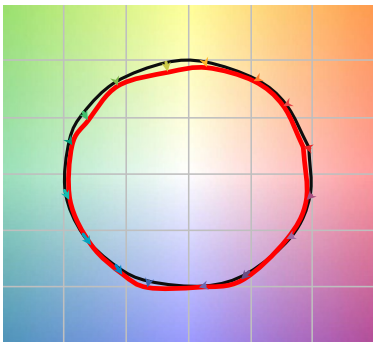

Reference Illuminant — Test Source

COLOR DISTORTION GRAPHIC 3500K, 90 CRI

TEST RESULTS - 3500K		
Value	80+ CRI	90+ CRI
R_f	84	88
R_g	95	95
CCT (K)	3411	3419
D_{UV}	0.0015	0.0042
x	0.4120	0.4147
y	0.3974	0.4052
CIE R_a	84	93
CIE R_g	11	62

COLOR VECTOR GRAPHIC 3500K, 80 CRI

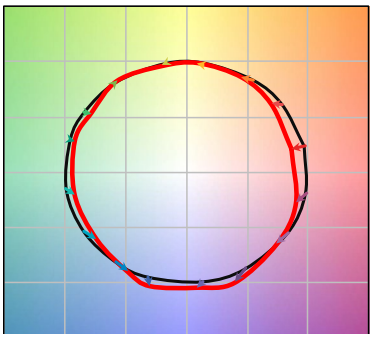

Reference Illuminant — Test Source

COLOR DISTORTION GRAPHIC 3500K, 80 CRI

© 2021 Prescolite, a division of Hubbell Lighting, Inc. Specifications subject to change without notice.
701 Millennium Blvd • Greenville, SC 29607 / Tel 864.678.1000 / Website www.prescolite.com

HUBBELL Lighting

prescolite

DATE:	LOCATION:
TYPE:	PROJECT:
CATALOG #:	

LTR-6RD (SH)

LITEISTRY 6" ROUND NON-CONDUCTIVE SHOWER DOWNLIGHT

ELECTRICAL DATA

DRIVER DATA		
Input Voltage	120-277 V	347 V
Input Frequency	50/60 Hz	50/60 Hz
Power Factor	≥0.90	≥0.90
THD	<20%	<20%
EMI Filtering (FCC 47 CFR Part 15)	Class A	Class A

* Values for DM1 option shown, values for other dimming options may vary.

WATTAGE DATA		
Lumen Output	Nominal Lumens	WATTAGE
06L	600	8
10L	1000	12
15L	1500	19
20L	2000	23
25L	2500	28
30L	3000	35
35L	3500	43
40L	4000	52

* Wattage may vary based on configuration and options selected

ADDITIONAL INFORMATION

DIMMING COMPATIBILITY CHART		
Dimming Driver	Manufacturer	Web Link
DM1 /DM01	Lutron DVTV	http://bit.ly/11jSvZg
DM1	Leviton AWRMG-7xx, AWSMG-7xx, AWSMT-7xx	http://bit.ly/1BJn2R9
EDM	Lutron	http://bit.ly/1vtjHAl
2DM	Lutron	http://bit.ly/1S4WjXK

DMX

See instruction sheet on www.prescolite.com for connection & installation information.

Central Inverters

For full fixture output in back-up mode, we recommend you visit www.dual-lite.com for your Central Lighting Inverter options. Please contact your local Hubbell representative for any assistance with proper sizing and loading of your inverter selection. Central lighting inverters must be ordered separately.
LiteGear: www.dual-lite.com/products/litegear_lg_series
LPS Series: www.dual-lite.com/products/lps

All product and company names, logos and product identifiers are trademarks ™ or registered trademarks ® of Hubbell Lighting, Inc. or their respective owners. Use of them does not necessarily imply any affiliation with or endorsement by such respective owners.

© 2021 Prescolite, a division of Hubbell Lighting, Inc. Specifications subject to change without notice.
701 Millennium Blvd • Greenville, SC 29607 / Tel 864.678.1000 / Website www.prescolite.com

HUBBELL Lighting

Voilà

4" Square Downlight

Fixed/Adjustable

LUMENWERX

Project: _____

Type: D1/D1E

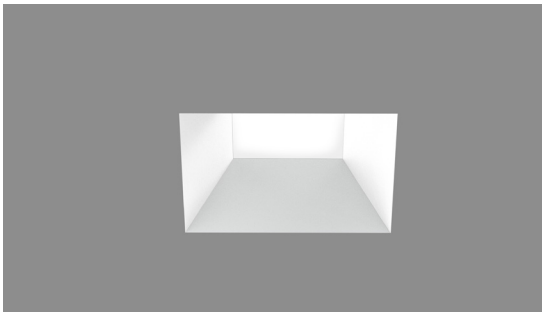

Trimless

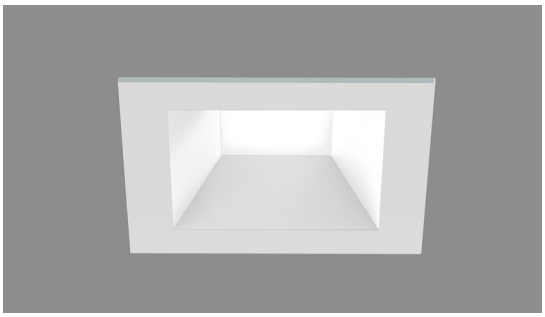

Trim

Voila 4" square downlights feature innovative Hyflex™ optics for precise beam control. Shallow construction requires only 4" recess depth. Driver can be replaced through 2" aperture. The Voila COB source with 90 CRI and 2-step color consistency matches other Lumenwerx luminaires, and is available with Chromawerx SOLA (dim-to-warm) and DUO (tunable white), as well as emergency option. Complete Voila offering includes 2" and 4" apertures; downlights, adjustables, and wall washers; round and square trim; and cylinders; see separate specifications.

Performance

LUMEN OUTPUT [1]	WATTS	EFFICACY LM/W
1336 lm	14 W	95 lm/W
1813 lm	20 W	91 lm/W
2442 lm	28 W	87 lm/W

[1] Lumens packages are assuming 3500K, 80 CRI, 30° beam, square white baffle

Delivered Lumens for Round White Standard Baffles at 35K

CRI	90 CRI							
BEAM	10	20	30	40	50	60	75	90
Low - 13.8 W	1257	1203	1410	1424	1379	1363	1333	1302
Medium - 19.7 W	1576	1508	1912	1933	1871	1849	1808	1766
High - 28 W	1932	1848	2576	2604	2520	2492	2436	2380

CHROMAWERX

IP44 Shower Rated

Some restrictions may apply.

Aperture Size

3.55"

Configurations

Fixed, adjustable & wall wash (see other spec sheets for all the configurations)

Baffle Depth

Standard 1.00"

Trim

Trim & Trimless

Baffle & Trim Flange Finishes

Textured matte white

Textured matte black

Mixed black & white

Custom RAL

Color Temperature

2700K

3000K

3500K

4000K

SOLA

DUO

Delivered 1152-2492 lm
14-28 Watts, up to 99 lm/W

Integral Drivers

0-10V, TRIAC, ELV, eldoLED & Lutron

Remote Drivers

Lutron, eldoLED and other drivers

Emergency battery pack

3737 Cote Vertu St-Laurent, Quebec, Canada H4R 2C9
T (514) 225-4304 F (514) 931 -4862
www.lumenwerx.com

Intertek

Lumenwerx reserves the right to modify product specifications without notification.
© Lumenwerx, ULC. All rights reserved.

VOILA4-SQUARE-DOWNLIGHT-SPEC-REV9 April 21, 2021

Voilà

4" Square Downlight

Fixed/Adjustable

LUMENWERX

Project: VO4SR-TRM-DUO-OF-UNV-20W-RDD1-VO4-DUO-50-90-40-TMW-TWM

Type: D1/D1E

1 - Housing (Example: VO4SR-TRM-SW-OF-ASB-120-14W-D1)

Product Specification

LUMINAIRE ID	TRIM STYLE	LIGHT SOURCE	INSTALLATION TYPE	MOUNTING OPTION	VOLTAGE	WATTAGE (80 CRI) [3]	DIMMING		
VO4SR	TRM	DUO	OF		UNV	20W	RDD1		
VO4SR - Voila 4" Square Recessed	**TRM** - Flanged trim **TLMP** - Trimless drywall mudplate **TLMW** - Trimless millwork	**SW** - Static white **SOLA** - Dim-to-warm **DUO** - Tunable white	**OF** - Open frame type non-IC **IC** [1] - IC rated **CP** [1] - Chicago Plenum type-IC (CCEA) [1] IC/CP with low output only.	**ACB** - Adjustable commercial bar hangers (grid and drywall) **ASB** - Adjustable standard bar hangers (grid and drywall) **FMB** - Flush mount bars (drywall only) **AHC** - Adjustable hat channel bars	**120** - 120V **UNV** - 120V-277V **347** [2] - 347V [2] Available with 0-10V dimming options D1, RD1 and RSD1 only. Consult factory for details.	**14W** - Low output 1152-1363 lm **20W** [4] - Medium output 1444-1849 lm **28W** [4] - High output 1769-2492 lm For other lumen packages, please consult factory. **SOLA** **13W** - Low output 920 lm (20° only) **25W** [4] - High output 1800-1981 lm (40° and up) **DUO** **10W** - Low output 700 lm (20° only) **20W** [4] - High output 1100-1200 lm (40° and up) [3] For delivered lumens and other CRI, see multiplier tables on page 3. [4] Available with **OF** housing only.	**INTEGRAL** **D1** - 1% 0-10V **ELV** [5] - ELV 120V **TRI** [5] - TRIAC 120V **LTEA2W** [5 6] - Lutron 1% - 2 wire FP 120V **LDE1** [6] - Lutron Hi-lume 1% Eco **LDE5** [6] - Lutron 5% EcoSystem **DA** [6] - DALI **ELD0** [6] - eldoLED 0.1% **ELD1** [6] - eldoLED 1% **DEB** [7] - 0-10V with onboard emergency battery backup **SOLA** **SD1** - Single 0-10V input **DUO** **PSQ0** [8] - Lutron T-Series 1% tunable white [5] Available with 120V only. [6] Not available with **CP** installation type. [7] Available with **OF** housing only.	**REMOTE** **RD1** - 1% 0-10V **RELV** [8] - ELV 120V **RTRI** [8] - TRIAC 120V **RLTEA2W** [8] - Lutron 1% - 2 wire FP 120V **RLDE1** - Lutron Hi-lume 1% Eco **RLDE5** - Lutron 5% EcoSystem **RDA** - DALI **RELD0** - eldoLED 0.1% **RELD1** - eldoLED 1% **SOLA** **RSD1** - Single 0-10V input **DUO** **RDMX** - To specify, see pages 7 to 9 **RDDA** - DALI **RDD1** - Dual 0-10V input for CCT/intensity **RPSQ0** - Lutron T-Series 1% tunable white [8] Available with 120V only.	**+EB** [9] - Emergency battery [9] Specify with remote dimming only. The code will be like the following example: **RD1 + EB**.

2 - Light (Example: VO4-SW-10-2-90-27-LS)

LUMINAIRE ID	LIGHT SOURCE	BEAM		COLOR QUALITY	CRI	COLOR TEMP	OPTION
VO4	DUO	50			90	40	
VO4 - Voila 4"	**SW** - Static white **SOLA** - Dim-to-warm **DUO** - Tunable white	**10** - 10° Narrow spot **20** - 20° Spot **30** - 30° Narrow flood **40** - 40° Flood **50** - 50° Wide flood **60** - 60° Very wide flood **75** - 75° Very wide flood **90** - 90° Open flood	**SOLA/DUO** **20** [10] - 20° Spot **40** [11] - 40° Flood **50** [11] - 50° Wide flood **60** [11] - 60° Very wide flood **75** [11] - 75° Very wide flood **90** [11] - 90° Open flood [10] Available with low output only. [11] Available with high output only.	**2** - 2 Step MacAdam Ellipse **3** - 3 Step MacAdam Ellipse	**90** - 90 CRI **80** - 80 CRI **97** - 97 CRI (not available for 3500K) **90** - 90 CRI (**SOLA** and **DUO**)	**27** - 2700K **30** - 3000K **35** - 3500K **40** - 4000K **SOLA** - Dim-to-warm 35K-22K **DUO** - Tunable white 27K-65K	**LS** [12] - Linear spread **HEX** [12] - Hex louver **NA** - None [12] Hex louver & linear spread cannot be combined together.

3 - Baffle (Example: VO4SRB-TRM-SDL-SR-TMW-TMW)

LUMINAIRE ID	TRIM STYLE [13]	LENS [13]	BAFFLE POSITION	BAFFLE FINISH [13]	TRIM FLANGE FINISH [13]
VO4SRB			**SR**		
VO4SRB - Voila 4" Square Recessed Baffle	**TRM** - Flanged trim **TLMP** - Trimless drywall mudplate **TLMW** - Trimless millwork	**SDL** - Soft diffused lens **FDL** - Frosted diffused lens **NOL** - No lens	**SR** - Standard regress	**TMW** - Textured matte white **TMB** - Textured matte black **CF#** - Custom finish, specify RAL# (e.g. **CF1028**)	**TMW** [14] - Textured matte white **TMB** [14] - Textured matte black **CF#** [14] - Custom finish, specify RAL# (e.g. **CF1028**) **NA** - None [14] Applicable for **TRM** only.

[13] IP44 rated for bathrooms, showers, outdoor canopies and marquees when specified with lens options (**SDL**, **FDL**), trim option (**TRM**), and the same finish for both the baffle and trim.

3737 Cote Vertu St-Laurent, Quebec, Canada H4R 2C9
T (514) 225-4304 F (514) 931 -4862
www.lumenwerx.com

Intertek

Lumenwerx reserves the right to modify product specifications without notification.
© Lumenwerx, ULC. All rights reserved.

VOILA4-SQUARE-DOWNLIGHT-SPEC-REV9 April 21, 2021

Voilà

4" Square Downlight

Fixed/Adjustable

LUMENWERX

Project: _____

Type: _____

Photometrics

Please follow the multiplier tables to ensure correct lumen value. Beams, baffle color, lensing, CCT, CRI, baffle shape and accessories will change the lumen value.

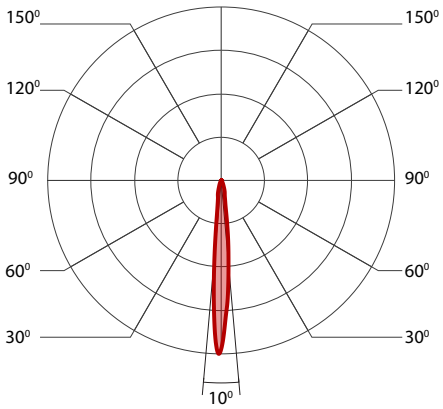

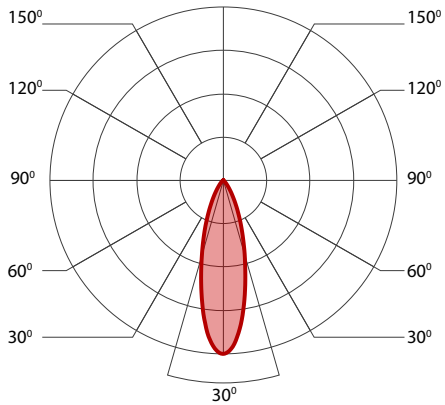

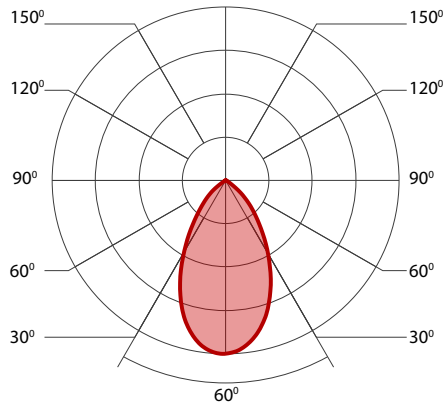

Delivered Lumens for Round White Standard Baffles at 35K

CRI	80 CRI								90 CRI							
BEAM	10	20	30	40	50	60	75	90	10	20	30	40	50	60	75	90
Low - 13.8 W	1348	1294	1501	1532	1475	1455	1424	1394	1257	1203	1410	1424	1379	1363	1333	1302
Medium - 19.7 W	1692	1623	2037	2078	1995	1975	1933	1892	1576	1508	1912	1933	1871	1849	1808	1766
High - 28 W	2072	1988	2744	2800	2688	2660	2604	2548	1932	1848	2576	2604	2520	2492	2436	2380

Delivered Lumens - At 30K

97 CRI							
10	20	30	40	50	60	75	90
1080	1053	1213	1225	1186	1172	1146	1120
1355	1297	1644	1663	1609	1590	1555	1519
1820	1736	2212	2122	2156	2128	2100	2044

Efficacy Based on Delivered Lumens - High 28 W

LPW								
BEAM	10	20	30	40	50	60	75	90
80 CRI	74	71	98	100	96	95	93	91
90 CRI	69	66	92	93	90	89	87	85
97 CRI	65	62	79	79	77	76	75	73

SOLA and DUO Max Wattage

90 CRI								
BEAM	10	20	30	40	50	60	75	90
DUO	NA	10	NA	19	19	19	19	19
SOLA	NA	13	NA	26	26	26	26	26

Multiplier - CCT

CCT	
2700K	0.9
3000K	0.95
3500K	1
4000K	1.05

For SOLA and DUO, please consult factory.

Multiplier - Baffle Color and Shape

BAFFLE VARIABLES		
White	Round standard	1
White	Square standard	0.89
Black	Round standard	0.95
Black	Square standard	0.87

Multiplier - Optical Options

LENS AND LOUVERS	
No lens	1
Soft diffused lens	0.94
Frosted lens	0.78
Hex louvers	0.82

3737 Cote Vertu St-Laurent, Quebec, Canada H4R 2C9
T (514) 225-4304 F (514) 931 -4862
www.lumenwerx.com

Intertek

Lumenwerx reserves the right to modify product specifications without notification.
© Lumenwerx, ULC. All rights reserved.
VOILA4-SQUARE-DOWNLIGHT-SPEC-REV9 April 21, 2021

Voilà

4" Square Downlight

Fixed/Adjustable

LUMENWERX

Project: _____

Type: _____

Integral Driver

Unless otherwise specified, Voila comes standard with an integral, 120-277VAC/60Hz, electronic, 1% 0-10V dimming, constant-current LED driver. The driver is field replaceable and features a high power factor, low THD and sources 1 mA on the 0-10V dim line. All integral drivers are located inside the housing and are easily accessible from below the ceiling through the aperture. All dimming drivers comply with IEEE C62.41 surge protection requirements.

Emergency Integral

Factory installed, long-life, high-temperature, LED driver with integrated emergency backup using a recyclable LiFePO4 battery pack. Features a remote test switch with charge indicator, minimum of 90 minutes operation and 10W per downlight emergency lighting output. Recharge time of 12 hours.

Emergency Remote

Long-life, high-temperature, emergency LED driver with Lithium Ion battery pack. Features a test switch with charge indicator, minimum of 90 minutes operation and 10W per downlight emergency lighting output. Recharge time of 24 hours.

Trim Dimensions

Trimless

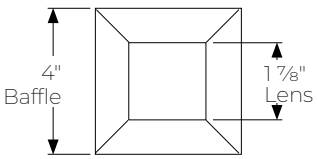

Trim

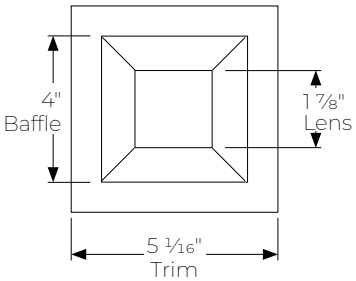

CHROMAWERX

Chromawerx Sola is single-channel control that dims output while warming the color temperature in a pre-determined relationship. A simple analog control adjusts a specially populated LED array to emulate the effect of dimming a filament source.

CHROMAWERX

Chromawerx Duo offers a two-channel control system which uses analog or digital protocols for synchronous control of both warm (2700K) to cool (6500K) LED arrays - maintaining a CRI above 90. The range of color DUO offers is useful for entraining circadian rhythms, stimulating alertness, and compensating for jet lag among other applications. The Chromawerx drivers are programmed to limit maximum light output and power usage across all color temperatures.

Baffle

Standard Regress

Trimless

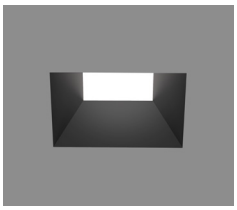

Black Baffle

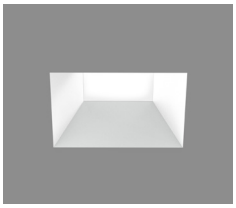

White Baffle

Trim

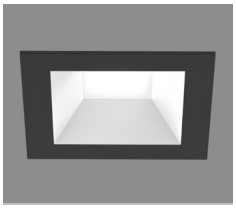

White Baffle, Black Trim

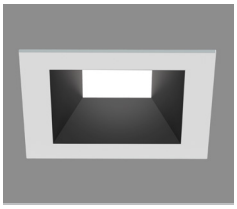

Black Baffle, White Trim

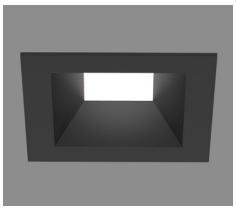

Black Baffle, Black Trim

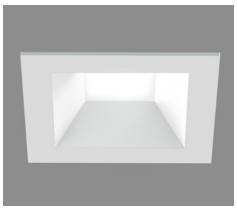

White Baffle, White Trim

3737 Cote Vertu St-Laurent, Quebec, Canada H4R 2C9
T (514) 225-4304 F (514) 931 -4862
www.lumenwerx.com

Intertek

Lumenwerx reserves the right to modify product specifications without notification.
© Lumenwerx, ULC. All rights reserved.

VOILA4-SQUARE-DOWNLIGHT-SPEC-REV9 April 21, 2021

Voilà

4" Square Downlight

Fixed/Adjustable

LUMENWERX

Project: _____

Type: D2/D2E

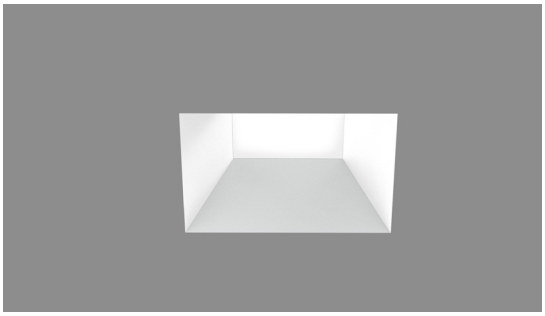

Trimless

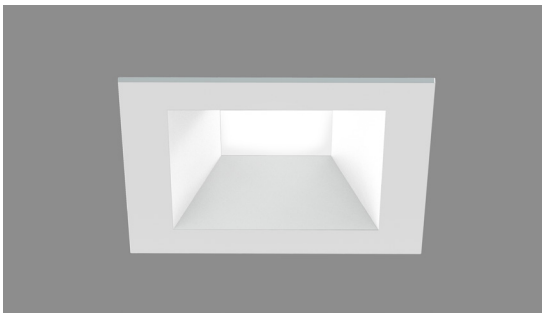

Trim

Voila 4" square downlights feature innovative Hyflex™ optics for precise beam control. Shallow construction requires only 4" recess depth. Driver can be replaced through 2" aperture. The Voila COB source with 90 CRI and 2-step color consistency matches other Lumenwerx luminaires, and is available with Chromawerx SOLA (dim-to-warm) and DUO (tunable white), as well as emergency option. Complete Voila offering includes 2" and 4" apertures; downlights, adjustables, and wall washers; round and square trim; and cylinders; see separate specifications.

Performance

LUMEN OUTPUT [1]	WATTS	EFFICACY LM/W
1336 lm	14 W	95 lm/W
1813 lm	20 W	91 lm/W
2442 lm	28 W	87 lm/W

[1] Lumens packages are assuming 3500K, 80 CRI, 30° beam, square white baffle

Delivered Lumens for Round White Standard Baffles at 35K

CRI	90 CRI							
BEAM	10	20	30	40	50	60	75	90
Low - 13.8 W	1257	1203	1410	1424	1379	1363	1333	1302
Medium - 19.7 W	1576	1508	1912	1933	1871	1849	1808	1766
High - 28 W	1932	1848	2576	2604	2520	2492	2436	2380

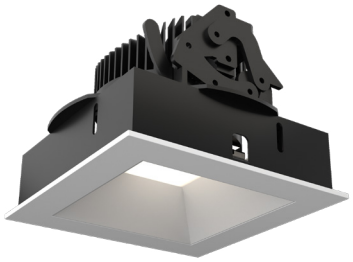

CHROMAWERX

IP44 Shower Rated

Some restrictions may apply.

Aperture Size

3.55"

Configurations

Fixed, adjustable & wall wash (see other spec sheets for all the configurations)

Baffle Depth

Standard 1.00"

Trim

Trim & Trimless

Baffle & Trim Flange Finishes

- Textured matte white
- Textured matte black
- Mixed black & white
- Custom RAL

Color Temperature

- 2700K
- 3000K
- 3500K
- 4000K
- SOLA
- DUO

Delivered 1152-2492 lm
14-28 Watts, up to 99 lm/W

Integral Drivers

0-10V, TRIAC, ELV, eldoLED & Lutron

Remote Drivers

Lutron, eldoLED and other drivers

Emergency battery pack

3737 Cote Vertu St-Laurent, Quebec, Canada H4R 2C9
T (514) 225-4304 F (514) 931 -4862
www.lumenwerx.com

Intertek

Lumenwerx reserves the right to modify product specifications without notification.
© Lumenwerx, ULC. All rights reserved.

VOILA4-SQUARE-DOWNLIGHT-SPEC-REV9 April 21, 2021

Voilà

4" Square Downlight

Fixed/Adjustable

LUMENWERX

Project: VO4SR-TRM-DUO-OF-UNV-20W-RDD1-VO4-DUO-50-90-40-TMW-TWM

Type: D2/D2E

1 - Housing (Example: VO4SR-TRM-SW-OF-ASB-120-14W-D1)

Product Specification

LUMINAIRE ID	TRIM STYLE	LIGHT SOURCE	INSTALLATION TYPE	MOUNTING OPTION	VOLTAGE	WATTAGE (80 CRI) [3]	DIMMING		
VO4SR									
VO4SR - Voila 4" Square Recessed	**TRM** - Flanged trim **TLMP** - Trimless drywall mudplate **TLMW** - Trimless millwork	**SW** - Static white	**OF** - Open frame type non-IC **IC** [1] - IC rated **CP** [1] - Chicago Plenum type-IC (CCEA) [1] IC/CP with low output only.	**ACB** - Adjustable commercial bar hangers (grid and drywall) **ASB** - Adjustable standard bar hangers (grid and drywall) **FMB** - Flush mount bars (drywall only) **AHC** - Adjustable hat channel bars	**120** - 120V **UNV** - 120V-277V **347** [2] - 347V [2] Available with 0-10V dimming options D1, RD1 and RSD1 only. Consult factory for details.	**14W** - Low output 1152-1363 lm **20W** [4] - Medium output 1444-1849 lm **28W** [4] - High output 1769-2492 lm For other lumen packages, please consult factory.	**INTEGRAL** **D1** - 1% 0-10V **ELV** [5] - ELV 120V **TRI** [5] - TRIAC 120V **LTEA2W** [5 6] - Lutron 1% - 2 wire FP 120V **LDE1** [6] - Lutron Hi-lume 1% Eco **LDE5** [6] - Lutron 5% EcoSystem **DA** [6] - DALI **ELD0** [6] - eldoLED 0.1% **ELD1** [6] - eldoLED 1% **DEB** [7] - 0-10V with onboard emergency battery backup	**REMOTE** **RD1** - 1% 0-10V **RELV** [8] - ELV 120V **RTRI** [8] - TRIAC 120V **RLTEA2W** [8] - Lutron 1% - 2 wire FP 120V **RLDE1** - Lutron Hi-lume 1% Eco **RLDE5** - Lutron 5% EcoSystem **RDA** - DALI **RELD0** - eldoLED 0.1% **RELD1** - eldoLED 1%	**+EB** [9] - Emergency battery [9] Specify with remote dimming only. The code will be like the following example: **RD1 + EB**.
		SOLA - Dim-to-warm **DUO** - Tunable white				**SOLA** **13W** - Low output 920 lm (20° only) **25W** [4] - High output 1800-1981 lm (40° and up) **DUO** **10W** - Low output 700 lm (20° only) **20W** [4] - High output 1100-1200 lm (40° and up)	**SOLA** **SD1** - Single 0-10V input **DUO** **PSQ0** [8] - Lutron T-Series 1% tunable white	**SOLA** **RSD1** - Single 0-10V input **DUO** **RDMX** - To specify, see pages 7 to 9 **RDDA** - DALI **RDD1** - Dual 0-10V input for CCT/intensity **RPSQ0** - Lutron T-Series 1% tunable white	
						[3] For delivered lumens and other CRI, see multiplier tables on page 3. [4] Available with **OF** housing only.	[5] Available with 120V only. [6] Not available with **CP** installation type. [7] Available with **OF** housing only.	[8] Available with 120V only.	

2 - Light (Example: VO4-SW-10-2-90-27-LS)

LUMINAIRE ID	LIGHT SOURCE	BEAM		COLOR QUALITY	CRI	COLOR TEMP	OPTION
VO4							
VO4 - Voila 4"	**SW** - Static white	**10** - 10° Narrow spot **20** - 20° Spot **30** - 30° Narrow flood **40** - 40° Flood **50** - 50° Wide flood **60** - 60° Very wide flood **75** - 75° Very wide flood **90** - 90° Open flood	**SOLA/DUO** **20** [10] - 20° Spot **40** [11] - 40° Flood **50** [11] - 50° Wide flood **60** [11] - 60° Very wide flood **75** [11] - 75° Very wide flood **90** [11] - 90° Open flood [10] Available with low output only. [11] Available with high output only.	**2** - 2 Step MacAdam Ellipse	**90** - 90 CRI **80** - 80 CRI **97** - 97 CRI (not available for 3500K)	**27** - 2700K **30** - 3000K **35** - 3500K **40** - 4000K	**LS** [12] - Linear spread **HEX** [12] - Hex louver **NA** - None [12] Hex louver & linear spread cannot be combined together.
	SOLA - Dim-to-warm **DUO** - Tunable white			**3** - 3 Step MacAdam Ellipse	**90** - 90 CRI (**SOLA** and **DUO**)	**SOLA** - Dim-to-warm 35K-22K **DUO** - Tunable white 27K-65K	

3 - Baffle (Example: VO4SRB-TRM-SDL-SR-TMW-TMW)

LUMINAIRE ID	TRIM STYLE [13]	LENS [13]	BAFFLE POSITION	BAFFLE FINISH [13]	TRIM FLANGE FINISH [13]
VO4SRB			**SR**		
VO4SRB - Voila 4" Square Recessed Baffle	**TRM** - Flanged trim **TLMP** - Trimless drywall mudplate **TLMW** - Trimless millwork	**SDL** - Soft diffused lens **FDL** - Frosted diffused lens **NOL** - No lens	**SR** - Standard regress	**TMW** - Textured matte white **TMB** - Textured matte black **CF#** - Custom finish, specify RAL# (e.g. **CF1028**)	**TMW** [14] - Textured matte white **TMB** [14] - Textured matte black **CF#** [14] - Custom finish, specify RAL# (e.g. **CF1028**) **NA** - None [14] Applicable for **TRM** only.

[13] IP44 rated for bathrooms, showers, outdoor canopies and marquees when specified with lens options (**SDL**, **FDL**), trim option (**TRM**), and the same finish for both the baffle and trim.

3737 Cote Vertu St-Laurent, Quebec, Canada H4R 2C9
T (514) 225-4304 F (514) 931 -4862
www.lumenwerx.com

Intertek

Lumenwerx reserves the right to modify product specifications without notification.
© Lumenwerx, ULC. All rights reserved.

VOILA4-SQUARE-DOWNLIGHT-SPEC-REV9 April 21, 2021

Voilà

4" Square Downlight

Fixed/Adjustable

LUMENWERX

Project: _____

Type: _____

Photometrics

Please follow the multiplier tables to ensure correct lumen value. Beams, baffle color, lensing, CCT, CRI, baffle shape and accessories will change the lumen value.

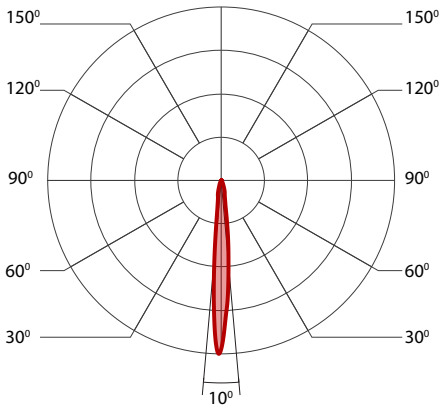

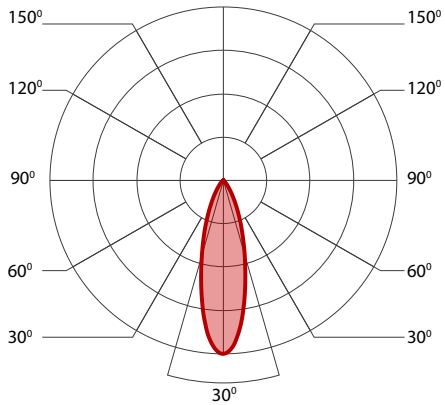

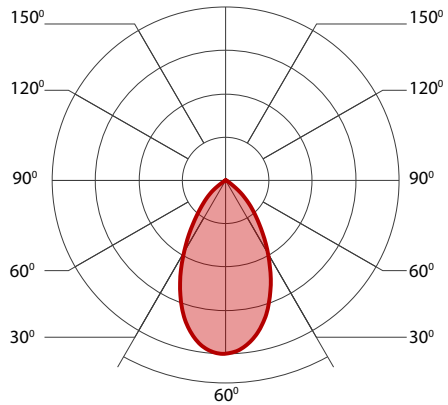

Delivered Lumens for Round White Standard Baffles at 35K

CRI	80 CRI								90 CRI							
BEAM	10	20	30	40	50	60	75	90	10	20	30	40	50	60	75	90
Low - 13.8 W	1348	1294	1501	1532	1475	1455	1424	1394	1257	1203	1410	1424	1379	1363	1333	1302
Medium - 19.7 W	1692	1623	2037	2078	1995	1975	1933	1892	1576	1508	1912	1933	1871	1849	1808	1766
High - 28 W	2072	1988	2744	2800	2688	2660	2604	2548	1932	1848	2576	2604	2520	2492	2436	2380

Delivered Lumens - At 30K

97 CRI							
10	20	30	40	50	60	75	90
1080	1053	1213	1225	1186	1172	1146	1120
1355	1297	1644	1663	1609	1590	1555	1519
1820	1736	2212	2122	2156	2128	2100	2044

Efficacy Based on Delivered Lumens - High 28 W

LPW								
BEAM	10	20	30	40	50	60	75	90
80 CRI	74	71	98	100	96	95	93	91
90 CRI	69	66	92	93	90	89	87	85
97 CRI	65	62	79	79	77	76	75	73

SOLA and DUO Max Wattage

90 CRI								
BEAM	10	20	30	40	50	60	75	90
DUO	NA	10	NA	19	19	19	19	19
SOLA	NA	13	NA	26	26	26	26	26

Multiplier - CCT

CCT	
2700K	0.9
3000K	0.95
3500K	1
4000K	1.05

For SOLA and DUO, please consult factory.

Multiplier - Baffle Color and Shape

BAFFLE VARIABLES		
White	Round standard	1
White	Square standard	0.89
Black	Round standard	0.95
Black	Square standard	0.87

Multiplier - Optical Options

LENS AND LOUVERS	
No lens	1
Soft diffused lens	0.94
Frosted lens	0.78
Hex louvers	0.82

3737 Cote Vertu St-Laurent, Quebec, Canada H4R 2C9
T (514) 225-4304 F (514) 931 -4862
www.lumenwerx.com

Intertek

Lumenwerx reserves the right to modify product specifications without notification.
© Lumenwerx, ULC. All rights reserved.
VOILA4-SQUARE-DOWNLIGHT-SPEC-REV9 April 21, 2021

Voilà

4" Square Downlight

Fixed/Adjustable

LUMENWERX

Project: _____

Type: _____

Integral Driver

Unless otherwise specified, Voila comes standard with an integral, 120-277VAC/60Hz, electronic, 1% 0-10V dimming, constant-current LED driver. The driver is field replaceable and features a high power factor, low THD and sources 1 mA on the 0-10V dim line. All integral drivers are located inside the housing and are easily accessible from below the ceiling through the aperture. All dimming drivers comply with IEEE C62.41 surge protection requirements.

Emergency Integral

Factory installed, long-life, high-temperature, LED driver with integrated emergency backup using a recyclable LiFePO4 battery pack. Features a remote test switch with charge indicator, minimum of 90 minutes operation and 10W per downlight emergency lighting output. Recharge time of 12 hours.

Emergency Remote

Long-life, high-temperature, emergency LED driver with Lithium Ion battery pack. Features a test switch with charge indicator, minimum of 90 minutes operation and 10W per downlight emergency lighting output. Recharge time of 24 hours.

Trim Dimensions

Trimless

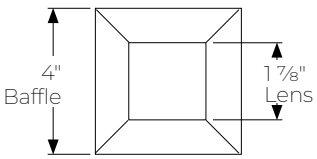

Trim

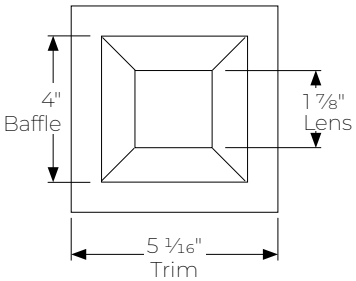

CHROMAWERX

Chromawerx Sola is single-channel control that dims output while warming the color temperature in a pre-determined relationship. A simple analog control adjusts a specially populated LED array to emulate the effect of dimming a filament source.

CHROMAWERX

Chromawerx Duo offers a two-channel control system which uses analog or digital protocols for synchronous control of both warm (2700K) to cool (6500K) LED arrays - maintaining a CRI above 90. The range of color DUO offers is useful for entraining circadian rhythms, stimulating alertness, and compensating for jet lag among other applications. The Chromawerx drivers are programmed to limit maximum light output and power usage across all color temperatures.

Baffle

Standard Regress

Trimless

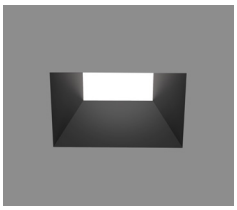

Black Baffle

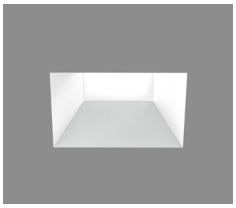

White Baffle

Trim

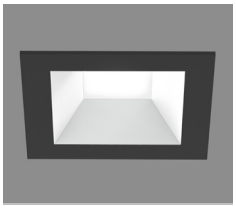

White Baffle, Black Trim

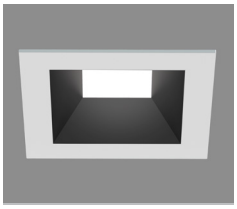

Black Baffle, White Trim

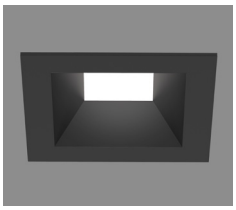

Black Baffle, Black Trim

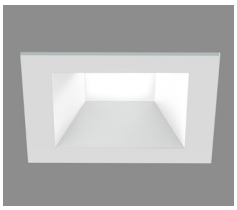

White Baffle, White Trim

3737 Cote Vertu St-Laurent, Quebec, Canada H4R 2C9
T (514) 225-4304 F (514) 931 -4862
www.lumenwerx.com

Intertek

Lumenwerx reserves the right to modify product specifications without notification.
© Lumenwerx, ULC. All rights reserved.

VOILA4-SQUARE-DOWNLIGHT-SPEC-REV9 April 21, 2021

Voilà

4" Square Downlight

Fixed/Adjustable

LUMENWERX

Project: _____

Type: D3/D3E

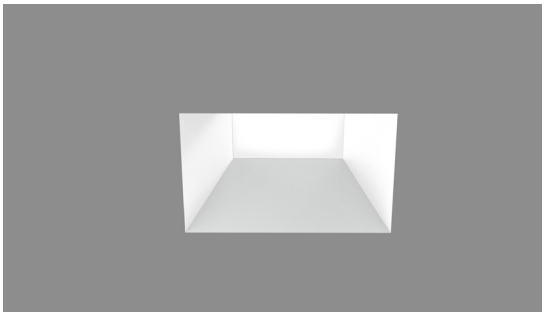

Trimless

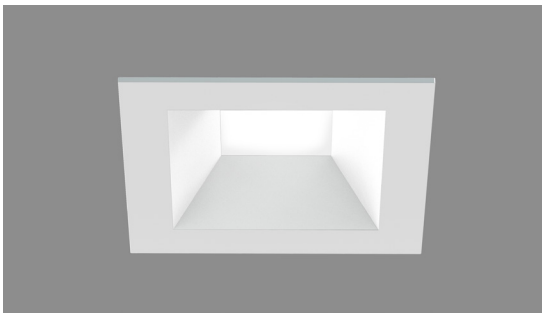

Trim

Voila 4" square downlights feature innovative Hyflex™ optics for precise beam control. Shallow construction requires only 4" recess depth. Driver can be replaced through 2" aperture. The Voila COB source with 90 CRI and 2-step color consistency matches other Lumenwerx luminaires, and is available with Chromawerx SOLA (dim-to-warm) and DUO (tunable white), as well as emergency option. Complete Voila offering includes 2" and 4" apertures; downlights, adjustables, and wall washers; round and square trim; and cylinders; see separate specifications.

Performance

LUMEN OUTPUT [1]	WATTS	EFFICACY LM/W
1336 lm	14 W	95 lm/W
1813 lm	20 W	91 lm/W
2442 lm	28 W	87 lm/W

[1] Lumens packages are assuming 3500K, 80 CRI, 30° beam, square white baffle

Delivered Lumens for Round White Standard Baffles at 35K

CRI	90 CRI							
BEAM	10	20	30	40	50	60	75	90
Low - 13.8 W	1257	1203	1410	1424	1379	1363	1333	1302
Medium - 19.7 W	1576	1508	1912	1933	1871	1849	1808	1766
High - 28 W	1932	1848	2576	2604	2520	2492	2436	2380

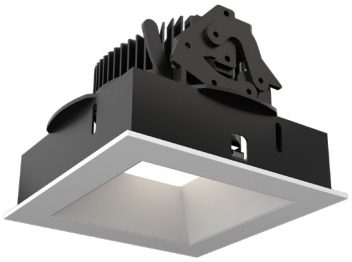

CHROMAWERX

IP44 Shower Rated

Some restrictions may apply.

Aperture Size

3.55"

Configurations

Fixed, adjustable & wall wash (see other spec sheets for all the configurations)

Baffle Depth

Standard 1.00"

Trim

Trim & Trimless

Baffle & Trim Flange Finishes

- Textured matte white
- Textured matte black
- Mixed black & white
- Custom RAL

Color Temperature

- 2700K
- 3000K
- 3500K
- 4000K
- SOLA
- DUO

Delivered 1152-2492 lm
14-28 Watts, up to 99 lm/W

Integral Drivers

0-10V, TRIAC, ELV, eldoLED & Lutron

Remote Drivers

Lutron, eldoLED and other drivers

Emergency battery pack

3737 Cote Vertu St-Laurent, Quebec, Canada H4R 2C9
T (514) 225-4304 F (514) 931 -4862
www.lumenwerx.com

Intertek

Lumenwerx reserves the right to modify product specifications without notification.
© Lumenwerx, ULC. All rights reserved.

VOILA4-SQUARE-DOWNLIGHT-SPEC-REV9 April 21, 2021

Voilà

4" Square Downlight

Fixed/Adjustable

LUMENWERX

Project: VO4SR-TRM-DUO-OF-UNV-20W-RDD1-VO4-DUO-50-90-40-ALUMINUM FINISH

Type: D3/D3E

1 - Housing (Example: VO4SR-TRM-SW-OF-ASB-120-14W-D1)

Product Specification

LUMINAIRE ID	TRIM STYLE	LIGHT SOURCE	INSTALLATION TYPE	MOUNTING OPTION	VOLTAGE	WATTAGE (80 CRI) [3]	DIMMING		
VO4SR									
VO4SR - Voila 4" Square Recessed	**TRM** - Flanged trim **TLMP** - Trimless drywall mudplate **TLMW** - Trimless millwork	**SW** - Static white	**OF** - Open frame type non-IC **IC** [1] - IC rated **CP** [1] - Chicago Plenum type-IC (CCEA) [1] IC/CP with low output only.	**ACB** - Adjustable commercial bar hangers (grid and drywall) **ASB** - Adjustable standard bar hangers (grid and drywall) **FMB** - Flush mount bars (drywall only) **AHC** - Adjustable hat channel bars	**120** - 120V **UNV** - 120V-277V **347** [2] - 347V [2] Available with 0-10V dimming options D1, RD1 and RSD1 only. Consult factory for details.	**14W** - Low output 1152-1363 lm **20W** [4] - Medium output 1444-1849 lm **28W** [4] - High output 1769-2492 lm For other lumen packages, please consult factory.	**INTEGRAL** **D1** - 1% 0-10V **ELV** [5] - ELV 120V **TRI** [5] - TRIAC 120V **LTEA2W** [5 6] - Lutron 1% - 2 wire FP 120V **LDE1** [6] - Lutron Hi-lume 1% Eco **LDE5** [6] - Lutron 5% EcoSystem **DA** [6] - DALI **ELD0** [6] - eldoLED 0.1% **ELD1** [6] - eldoLED 1% **DEB** [7] - 0-10V with onboard emergency battery backup	**REMOTE** **RD1** - 1% 0-10V **RELV** [8] - ELV 120V **RTRI** [8] - TRIAC 120V **RLTEA2W** [8] - Lutron 1% - 2 wire FP 120V **RLDE1** - Lutron Hi-lume 1% Eco **RLDE5** - Lutron 5% EcoSystem **RDA** - DALI **RELD0** - eldoLED 0.1% **RELD1** - eldoLED 1%	**+EB** [9] - Emergency battery [9] Specify with remote dimming only. The code will be like the following example: **RD1 + EB**.
		SOLA - Dim-to-warm **DUO** - Tunable white				**SOLA** **13W** - Low output 920 lm (20° only) **25W** [4] - High output 1800-1981 lm (40° and up) **DUO** **10W** - Low output 700 lm (20° only) **20W** [4] - High output 1100-1200 lm (40° and up)	**SOLA** **SD1** - Single 0-10V input **DUO** **PSQ0** [8] - Lutron T-Series 1% tunable white	**SOLA** **RSD1** - Single 0-10V input **DUO** **RDMX** - To specify, see pages 7 to 9 **RDDA** - DALI **RDD1** - Dual 0-10V input for CCT/intensity **RPSQ0** - Lutron T-Series 1% tunable white	
						[3] For delivered lumens and other CRI, see multiplier tables on page 3. [4] Available with **OF** housing only.	[5] Available with 120V only. [6] Not available with **CP** installation type. [7] Available with **OF** housing only.	[8] Available with 120V only.	

2 - Light (Example: VO4-SW-10-2-90-27-LS)

LUMINAIRE ID	LIGHT SOURCE	BEAM		COLOR QUALITY	CRI	COLOR TEMP	OPTION
VO4							
VO4 - Voila 4"	**SW** - Static white	**10** - 10° Narrow spot **20** - 20° Spot **30** - 30° Narrow flood **40** - 40° Flood **50** - 50° Wide flood **60** - 60° Very wide flood **75** - 75° Very wide flood **90** - 90° Open flood	**SOLA/DUO** **20** [10] - 20° Spot **40** [11] - 40° Flood **50** [11] - 50° Wide flood **60** [11] - 60° Very wide flood **75** [11] - 75° Very wide flood **90** [11] - 90° Open flood [10] Available with low output only. [11] Available with high output only.	**2** - 2 Step MacAdam Ellipse	**90** - 90 CRI **80** - 80 CRI **97** - 97 CRI (not available for 3500K)	**27** - 2700K **30** - 3000K **35** - 3500K **40** - 4000K	**LS** [12] - Linear spread **HEX** [12] - Hex louver **NA** - None [12] Hex louver & linear spread cannot be combined together.
	SOLA - Dim-to-warm **DUO** - Tunable white			**3** - 3 Step MacAdam Ellipse	**90** - 90 CRI (**SOLA** and **DUO**)	**SOLA** - Dim-to-warm 35K-22K **DUO** - Tunable white 27K-65K	

3 - Baffle (Example: VO4SRB-TRM-SDL-SR-TMW-TMW)

LUMINAIRE ID	TRIM STYLE [13]	LENS [13]	BAFFLE POSITION	BAFFLE FINISH [13]	TRIM FLANGE FINISH [13]
VO4SRB			**SR**	ALUMINUM	ALUMINUM
VO4SRB - Voila 4" Square Recessed Baffle	**TRM** - Flanged trim **TLMP** - Trimless drywall mudplate **TLMW** - Trimless millwork	**SDL** - Soft diffused lens **FDL** - Frosted diffused lens **NOL** - No lens	**SR** - Standard regress	**TMW** - Textured matte white **TMB** - Textured matte black **CF#** - Custom finish, specify RAL# (e.g. **CF1028**)	**TMW** [14] - Textured matte white **TMB** [14] - Textured matte black **CF#** [14] - Custom finish, specify RAL# (e.g. **CF1028**) **NA** - None [14] Applicable for **TRM** only.

[13] IP44 rated for bathrooms, showers, outdoor canopies and marquees when specified with lens options (**SDL**, **FDL**), trim option (**TRM**), and the same finish for both the baffle and trim.

3737 Cote Vertu St-Laurent, Quebec, Canada H4R 2C9
T (514) 225-4304 F (514) 931 -4862
www.lumenwerx.com

Intertek

Lumenwerx reserves the right to modify product specifications without notification.
© Lumenwerx, ULC. All rights reserved.

VOILA4-SQUARE-DOWNLIGHT-SPEC-REV9 April 21, 2021

Voilà

4" Square Downlight

Fixed/Adjustable

LUMENWERX

Project: _____

Type: _____

Photometrics

Please follow the multiplier tables to ensure correct lumen value. Beams, baffle color, lensing, CCT, CRI, baffle shape and accessories will change the lumen value.

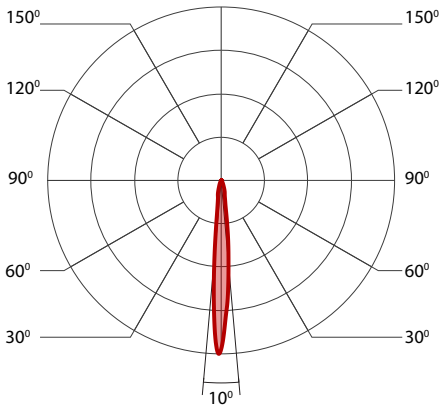

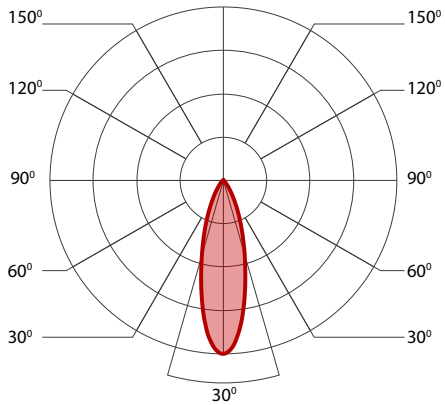

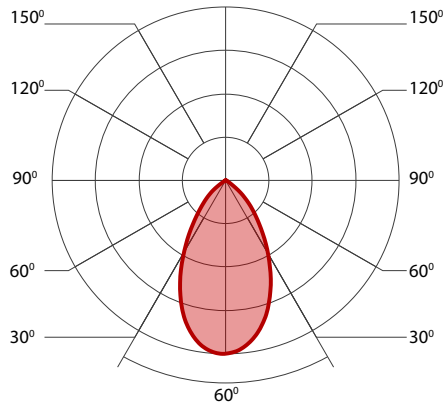

Delivered Lumens for Round White Standard Baffles at 35K

CRI	80 CRI								90 CRI							
BEAM	10	20	30	40	50	60	75	90	10	20	30	40	50	60	75	90
Low - 13.8 W	1348	1294	1501	1532	1475	1455	1424	1394	1257	1203	1410	1424	1379	1363	1333	1302
Medium - 19.7 W	1692	1623	2037	2078	1995	1975	1933	1892	1576	1508	1912	1933	1871	1849	1808	1766
High - 28 W	2072	1988	2744	2800	2688	2660	2604	2548	1932	1848	2576	2604	2520	2492	2436	2380

Delivered Lumens - At 30K

97 CRI							
10	20	30	40	50	60	75	90
1080	1053	1213	1225	1186	1172	1146	1120
1355	1297	1644	1663	1609	1590	1555	1519
1820	1736	2212	2122	2156	2128	2100	2044

Efficacy Based on Delivered Lumens - High 28 W

LPW								
BEAM	10	20	30	40	50	60	75	90
80 CRI	74	71	98	100	96	95	93	91
90 CRI	69	66	92	93	90	89	87	85
97 CRI	65	62	79	79	77	76	75	73

SOLA and DUO Max Wattage

90 CRI								
BEAM	10	20	30	40	50	60	75	90
DUO	NA	10	NA	19	19	19	19	19
SOLA	NA	13	NA	26	26	26	26	26

Multiplier - CCT

CCT	
2700K	0.9
3000K	0.95
3500K	1
4000K	1.05

For SOLA and DUO, please consult factory.

Multiplier - Baffle Color and Shape

BAFFLE VARIABLES		
White	Round standard	1
White	Square standard	0.89
Black	Round standard	0.95
Black	Square standard	0.87

Multiplier - Optical Options

LENS AND LOUVERS	
No lens	1
Soft diffused lens	0.94
Frosted lens	0.78
Hex louvers	0.82

3737 Cote Vertu St-Laurent, Quebec, Canada H4R 2C9
T (514) 225-4304 F (514) 931 -4862
www.lumenwerx.com

Intertek

Lumenwerx reserves the right to modify product specifications without notification.
© Lumenwerx, ULC. All rights reserved.
VOILA4-SQUARE-DOWNLIGHT-SPEC-REV9 April 21, 2021

Voilà

4" Square Downlight

Fixed/Adjustable

LUMENWERX

Project: _____

Type: _____

Integral Driver

Unless otherwise specified, Voila comes standard with an integral, 120-277VAC/60Hz, electronic, 1% 0-10V dimming, constant-current LED driver. The driver is field replaceable and features a high power factor, low THD and sources 1 mA on the 0-10V dim line. All integral drivers are located inside the housing and are easily accessible from below the ceiling through the aperture. All dimming drivers comply with IEEE C62.41 surge protection requirements.

Emergency Integral

Factory installed, long-life, high-temperature, LED driver with integrated emergency backup using a recyclable LiFePO4 battery pack. Features a remote test switch with charge indicator, minimum of 90 minutes operation and 10W per downlight emergency lighting output. Recharge time of 12 hours.

Emergency Remote

Long-life, high-temperature, emergency LED driver with Lithium Ion battery pack. Features a test switch with charge indicator, minimum of 90 minutes operation and 10W per downlight emergency lighting output. Recharge time of 24 hours.

Trim Dimensions

Trimless

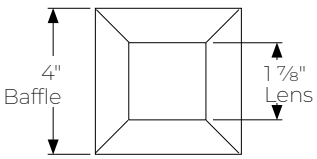

Trim

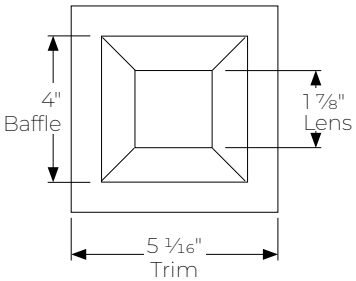

CHROMAWERX

Chromawerx Sola is single-channel control that dims output while warming the color temperature in a pre-determined relationship. A simple analog control adjusts a specially populated LED array to emulate the effect of dimming a filament source.

CHROMAWERX

Chromawerx Duo offers a two-channel control system which uses analog or digital protocols for synchronous control of both warm (2700K) to cool (6500K) LED arrays - maintaining a CRI above 90. The range of color DUO offers is useful for entraining circadian rhythms, stimulating alertness, and compensating for jet lag among other applications. The Chromawerx drivers are programmed to limit maximum light output and power usage across all color temperatures.

Baffle

Standard Regress

Trimless

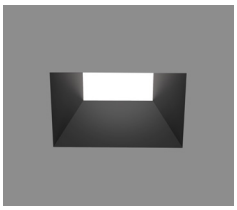

Black Baffle

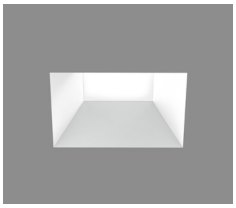

White Baffle

Trim

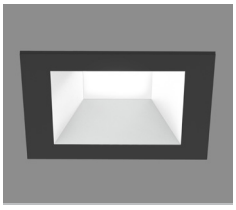

White Baffle, Black Trim

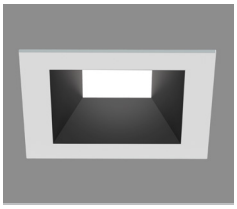

Black Baffle, White Trim

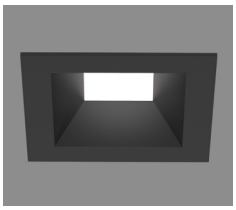

Black Baffle, Black Trim

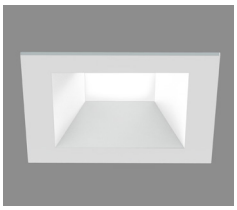

White Baffle, White Trim

3737 Cote Vertu St-Laurent, Quebec, Canada H4R 2C9
T (514) 225-4304 F (514) 931 -4862
www.lumenwerx.com

Intertek

Lumenwerx reserves the right to modify product specifications without notification.
© Lumenwerx, ULC. All rights reserved.

VOILA4-SQUARE-DOWNLIGHT-SPEC-REV9 April 21, 2021

Voilà

4" Square Downlight

Fixed/Adjustable

LUMENWERX

Project: _____

Type: D4

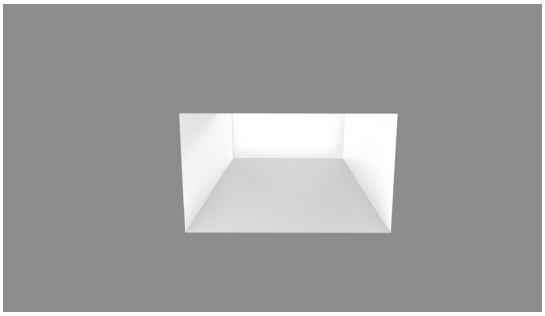

Trimless

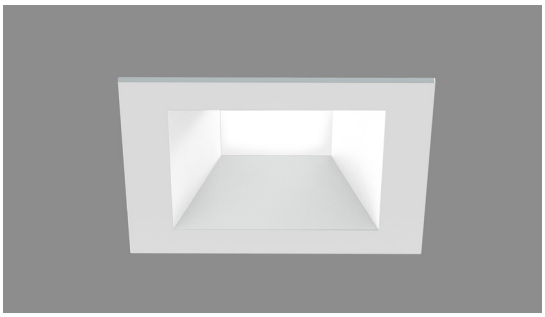

Trim

Voila 4" square downlights feature innovative Hyflex™ optics for precise beam control. Shallow construction requires only 4" recess depth. Driver can be replaced through 2" aperture. The Voila COB source with 90 CRI and 2-step color consistency matches other Lumenwerx luminaires, and is available with Chromawerx SOLA (dim-to-warm) and DUO (tunable white), as well as emergency option. Complete Voila offering includes 2" and 4" apertures; downlights, adjustables, and wall washers; round and square trim; and cylinders; see separate specifications.

Performance

LUMEN OUTPUT [1]	WATTS	EFFICACY LM/W
1336 lm	14 W	95 lm/W
1813 lm	20 W	91 lm/W
2442 lm	28 W	87 lm/W

[1] Lumens packages are assuming 3500K, 80 CRI, 30° beam, square white baffle

Delivered Lumens for Round White Standard Baffles at 35K

CRI	90 CRI							
BEAM	10	20	30	40	50	60	75	90
Low - 13.8 W	1257	1203	1410	1424	1379	1363	1333	1302
Medium - 19.7 W	1576	1508	1912	1933	1871	1849	1808	1766
High - 28 W	1932	1848	2576	2604	2520	2492	2436	2380

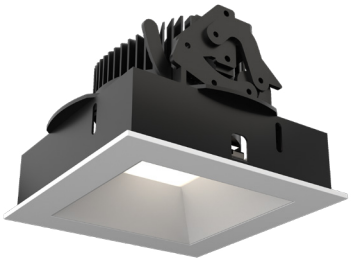

CHROMAWERX

IP44 Shower Rated

Some restrictions may apply.

Aperture Size

3.55"

Configurations

Fixed, adjustable & wall wash (see other spec sheets for all the configurations)

Baffle Depth

Standard 1.00"

Trim

Trim & Trimless

Baffle & Trim Flange Finishes

- Textured matte white
- Textured matte black
- Mixed black & white
- Custom RAL

Color Temperature

- 2700K
- 3000K
- 3500K
- 4000K
- SOLA
- DUO

Delivered 1152-2492 lm
14-28 Watts, up to 99 lm/W

Integral Drivers

0-10V, TRIAC, ELV, eldoLED & Lutron

Remote Drivers

Lutron, eldoLED and other drivers

Emergency battery pack

3737 Cote Vertu St-Laurent, Quebec, Canada H4R 2C9
T (514) 225-4304 F (514) 931 -4862
www.lumenwerx.com

Intertek

Lumenwerx reserves the right to modify product specifications without notification.
© Lumenwerx, ULC. All rights reserved.

VOILA4-SQUARE-DOWNLIGHT-SPEC-REV9 April 21, 2021

Voilà

4" Square Downlight

Fixed/Adjustable

LUMENWERX

Project: VO4SR-TRM-DUO-OF-UNV-14W-RDD1-VO4-DUO-50-90-40-TMW-TWM

Type: D4

1 - Housing (Example: VO4SR-TRM-SW-OF-ASB-120-14W-D1)

Product Specification

LUMINAIRE ID	TRIM STYLE	LIGHT SOURCE	INSTALLATION TYPE	MOUNTING OPTION	VOLTAGE	WATTAGE (80 CRI) [3]	DIMMING		
VO4SR									
VO4SR - Voila 4" Square Recessed	**TRM** - Flanged trim **TLMP** - Trimless drywall mudplate **TLMW** - Trimless millwork	**SW** - Static white	**OF** - Open frame type non-IC **IC** [1] - IC rated **CP** [1] - Chicago Plenum type-IC (CCEA) [1] IC/CP with low output only.	**ACB** - Adjustable commercial bar hangers (grid and drywall) **ASB** - Adjustable standard bar hangers (grid and drywall) **FMB** - Flush mount bars (drywall only) **AHC** - Adjustable hat channel bars	**120** - 120V **UNV** - 120V-277V **347** [2] - 347V [2] Available with 0-10V dimming options D1, RD1 and RSD1 only. Consult factory for details.	**14W** - Low output 1152-1363 lm **20W** [4] - Medium output 1444-1849 lm **28W** [4] - High output 1769-2492 lm For other lumen packages, please consult factory.	**INTEGRAL** **D1** - 1% 0-10V **ELV** [5] - ELV 120V **TRI** [5] - TRIAC 120V **LTEA2W** [5 6] - Lutron 1% - 2 wire FP 120V **LDE1** [6] - Lutron Hi-lume 1% Eco **LDE5** [6] - Lutron 5% EcoSystem **DA** [6] - DALI **ELD0** [6] - eldoLED 0.1% **ELD1** [6] - eldoLED 1% **DEB** [7] - 0-10V with onboard emergency battery backup	**REMOTE** **RD1** - 1% 0-10V **RELV** [8] - ELV 120V **RTRI** [8] - TRIAC 120V **RLTEA2W** [8] - Lutron 1% - 2 wire FP 120V **RLDE1** - Lutron Hi-lume 1% Eco **RLDE5** - Lutron 5% EcoSystem **RDA** - DALI **RELD0** - eldoLED 0.1% **RELD1** - eldoLED 1%	**+EB** [9] - Emergency battery [9] Specify with remote dimming only. The code will be like the following example: **RD1 + EB**.
		SOLA - Dim-to-warm **DUO** - Tunable white				**SOLA** **13W** - Low output 920 lm (20° only) **25W** [4] - High output 1800-1981 lm (40° and up) **DUO** **10W** - Low output 700 lm (20° only) **20W** [4] - High output 1100-1200 lm (40° and up)	**SOLA** **SD1** - Single 0-10V input **DUO** **PSQ0** [8] - Lutron T-Series 1% tunable white	**SOLA** **RSD1** - Single 0-10V input **DUO** **RDMX** - To specify, see pages 7 to 9 **RDDA** - DALI **RDD1** - Dual 0-10V input for CCT/intensity **RPSQ0** - Lutron T-Series 1% tunable white	
						[3] For delivered lumens and other CRI, see multiplier tables on page 3. [4] Available with **OF** housing only.	[5] Available with 120V only. [6] Not available with **CP** installation type. [7] Available with **OF** housing only.	[8] Available with 120V only.	

2 - Light (Example: VO4-SW-10-2-90-27-LS)

LUMINAIRE ID	LIGHT SOURCE	BEAM		COLOR QUALITY	CRI	COLOR TEMP	OPTION
VO4							
VO4 - Voila 4"	**SW** - Static white	**10** - 10° Narrow spot **20** - 20° Spot **30** - 30° Narrow flood **40** - 40° Flood **50** - 50° Wide flood **60** - 60° Very wide flood **75** - 75° Very wide flood **90** - 90° Open flood	**SOLA/DUO** **20** [10] - 20° Spot **40** [11] - 40° Flood **50** [11] - 50° Wide flood **60** [11] - 60° Very wide flood **75** [11] - 75° Very wide flood **90** [11] - 90° Open flood [10] Available with low output only. [11] Available with high output only.	**2** - 2 Step MacAdam Ellipse	**90** - 90 CRI **80** - 80 CRI **97** - 97 CRI (not available for 3500K)	**27** - 2700K **30** - 3000K **35** - 3500K **40** - 4000K	**LS** [12] - Linear spread **HEX** [12] - Hex louver **NA** - None [12] Hex louver & linear spread cannot be combined together.
	SOLA - Dim-to-warm **DUO** - Tunable white			**3** - 3 Step MacAdam Ellipse	**90** - 90 CRI (**SOLA** and **DUO**)	**SOLA** - Dim-to-warm 35K-22K **DUO** - Tunable white 27K-65K	

3 - Baffle (Example: VO4SRB-TRM-SDL-SR-TMW-TMW)

LUMINAIRE ID	TRIM STYLE [13]	LENS [13]	BAFFLE POSITION	BAFFLE FINISH [13]	TRIM FLANGE FINISH [13]
VO4SRB			**SR**		
VO4SRB - Voila 4" Square Recessed Baffle	**TRM** - Flanged trim **TLMP** - Trimless drywall mudplate **TLMW** - Trimless millwork	**SDL** - Soft diffused lens **FDL** - Frosted diffused lens **NOL** - No lens	**SR** - Standard regress	**TMW** - Textured matte white **TMB** - Textured matte black **CF#** - Custom finish, specify RAL# (e.g. **CF1028**)	**TMW** [14] - Textured matte white **TMB** [14] - Textured matte black **CF#** [14] - Custom finish, specify RAL# (e.g. **CF1028**) **NA** - None [14] Applicable for **TRM** only.

[13] IP44 rated for bathrooms, showers, outdoor canopies and marquees when specified with lens options (**SDL**, **FDL**), trim option (**TRM**), and the same finish for both the baffle and trim.

3737 Cote Vertu St-Laurent, Quebec, Canada H4R 2C9
T (514) 225-4304 F (514) 931 -4862
www.lumenwerx.com

Intertek

Lumenwerx reserves the right to modify product specifications without notification.
© Lumenwerx, ULC. All rights reserved.

VOILA4-SQUARE-DOWNLIGHT-SPEC-REV9 April 21, 2021

Voilà

4" Square Downlight

Fixed/Adjustable

LUMENWERX

Project: _____

Type: _____

Photometrics

Please follow the multiplier tables to ensure correct lumen value. Beams, baffle color, lensing, CCT, CRI, baffle shape and accessories will change the lumen value.

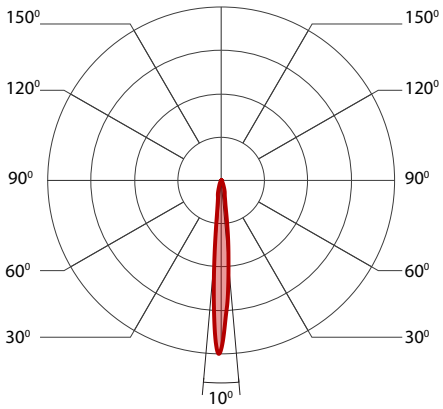

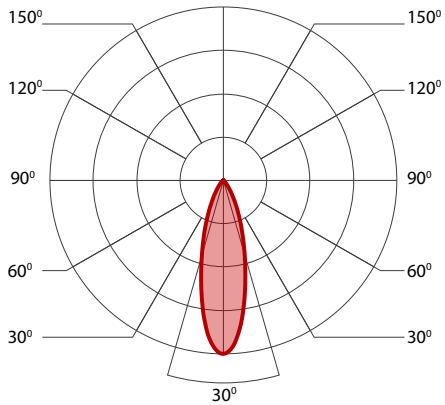

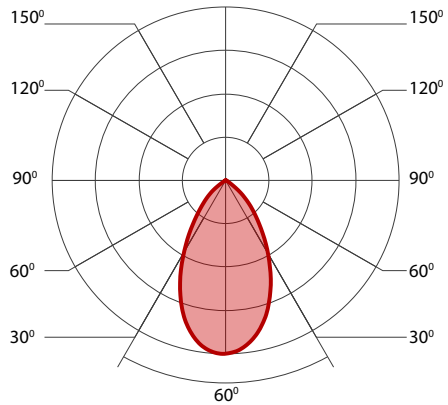

Delivered Lumens for Round White Standard Baffles at 35K

CRI	80 CRI								90 CRI							
BEAM	10	20	30	40	50	60	75	90	10	20	30	40	50	60	75	90
Low - 13.8 W	1348	1294	1501	1532	1475	1455	1424	1394	1257	1203	1410	1424	1379	1363	1333	1302
Medium - 19.7 W	1692	1623	2037	2078	1995	1975	1933	1892	1576	1508	1912	1933	1871	1849	1808	1766
High - 28 W	2072	1988	2744	2800	2688	2660	2604	2548	1932	1848	2576	2604	2520	2492	2436	2380

Delivered Lumens - At 30K

97 CRI							
10	20	30	40	50	60	75	90
1080	1053	1213	1225	1186	1172	1146	1120
1355	1297	1644	1663	1609	1590	1555	1519
1820	1736	2212	2122	2156	2128	2100	2044

Efficacy Based on Delivered Lumens - High 28 W

LPW								
BEAM	10	20	30	40	50	60	75	90
80 CRI	74	71	98	100	96	95	93	91
90 CRI	69	66	92	93	90	89	87	85
97 CRI	65	62	79	79	77	76	75	73

SOLA and DUO Max Wattage

90 CRI								
BEAM	10	20	30	40	50	60	75	90
DUO	NA	10	NA	19	19	19	19	19
SOLA	NA	13	NA	26	26	26	26	26

Multiplier - CCT

CCT	
2700K	0.9
3000K	0.95
3500K	1
4000K	1.05

For SOLA and DUO, please consult factory.

Multiplier - Baffle Color and Shape

BAFFLE VARIABLES		
White	Round standard	1
White	Square standard	0.89
Black	Round standard	0.95
Black	Square standard	0.87

Multiplier - Optical Options

LENS AND LOUVERS	
No lens	1
Soft diffused lens	0.94
Frosted lens	0.78
Hex louvers	0.82

3737 Cote Vertu St-Laurent, Quebec, Canada H4R 2C9
T (514) 225-4304 F (514) 931 -4862
www.lumenwerx.com

Intertek

Lumenwerx reserves the right to modify product specifications without notification.
© Lumenwerx, ULC. All rights reserved.
VOILA4-SQUARE-DOWNLIGHT-SPEC-REV9 April 21, 2021

Voilà

4" Square Downlight

Fixed/Adjustable

LUMENWERX

Project: _____

Type: _____

Integral Driver

Unless otherwise specified, Voila comes standard with an integral, 120-277VAC/60Hz, electronic, 1% 0-10V dimming, constant-current LED driver. The driver is field replaceable and features a high power factor, low THD and sources 1 mA on the 0-10V dim line. All integral drivers are located inside the housing and are easily accessible from below the ceiling through the aperture. All dimming drivers comply with IEEE C62.41 surge protection requirements.

Emergency Integral

Factory installed, long-life, high-temperature, LED driver with integrated emergency backup using a recyclable LiFePO4 battery pack. Features a remote test switch with charge indicator, minimum of 90 minutes operation and 10W per downlight emergency lighting output. Recharge time of 12 hours.

Emergency Remote

Long-life, high-temperature, emergency LED driver with Lithium Ion battery pack. Features a test switch with charge indicator, minimum of 90 minutes operation and 10W per downlight emergency lighting output. Recharge time of 24 hours.

Trim Dimensions

Trimless

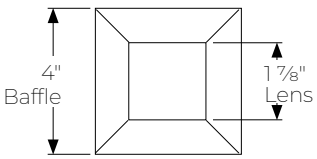

Trim

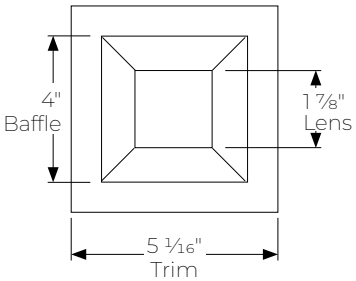

CHROMAWERX

Chromawerx Sola is single-channel control that dims output while warming the color temperature in a pre-determined relationship. A simple analog control adjusts a specially populated LED array to emulate the effect of dimming a filament source.

CHROMAWERX

Chromawerx Duo offers a two-channel control system which uses analog or digital protocols for synchronous control of both warm (2700K) to cool (6500K) LED arrays - maintaining a CRI above 90. The range of color DUO offers is useful for entraining circadian rhythms, stimulating alertness, and compensating for jet lag among other applications. The Chromawerx drivers are programmed to limit maximum light output and power usage across all color temperatures.

Baffle

Standard Regress

Trimless

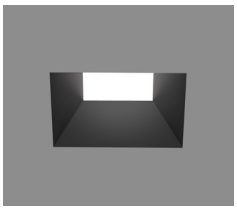

Black Baffle

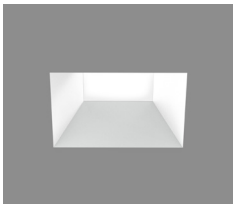

White Baffle

Trim

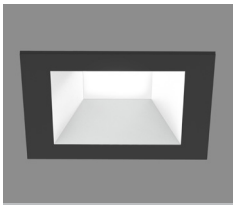

White Baffle, Black Trim

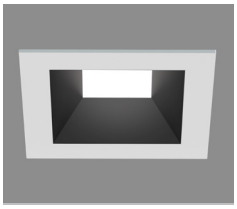

Black Baffle, White Trim

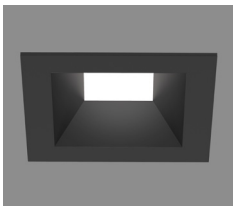

Black Baffle, Black Trim

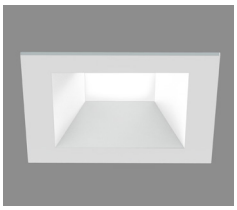

White Baffle, White Trim

3737 Cote Vertu St-Laurent, Quebec, Canada H4R 2C9
T (514) 225-4304 F (514) 931 -4862
www.lumenwerx.com

Intertek

Lumenwerx reserves the right to modify product specifications without notification.
© Lumenwerx, ULC. All rights reserved.

VOILA4-SQUARE-DOWNLIGHT-SPEC-REV9 April 21, 2021

AERA 3" DOWNLIGHT

SQUARE RECESSED

LUMENWERX

5 YEAR WARRANTY

Project: AE3SR-TRM-OF-UNV-10W-RD1
AE3SRB-50-90-40-TMW-TMW

Type: D5/D5E

Bevel Trimless Drywall Mudplate

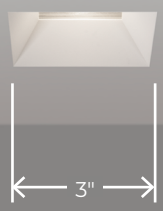

Bevel Flanged Trim

Aera recessed downlights are true to size, encased in minimalist housing, and suitable additions to any interior space where outstanding optical performance, maximal eye comfort, and/or an industry-leading wall wash are required.

Beam Angles

15° 25° 35° 50° 80° 90°

Low UGR < 10 in all beams

Ceiling Types

Drywall Millwork Acoustic Tile

Performance

LUMEN OUTPUT [1]	WATTS	EFFICACY
1132 lm	10 W	113 lm/W
1545 lm	14 W	110 lm/W
2135 lm	20 W	107 lm/W

[1] Lumen packages are assuming 3500K, 80CRI, 35° beam, with SDL lens option.

Installation Types

New Construction (Type Non-IC, Type-IC, CCEA)
Remodel (Type Non-IC)

Light Source

Static White
Full Spectrum
SOLA - Dim-to-Warm
DUO - Tunable White

Plenum Clearance

As low as 2 5/8"

COB

2 Step Color Binning
Up to 95 CRI

Certifications

IP44 Shower Rated
Some restrictions may apply.

JA8 TITLE 24

Drivers

1%, 0.1% Dimming Available
0-10V, TRIAC, ELV, Lutron EcoSystem, DALI, DMX
Emergency Battery (optional)

Aera Family (Refer to other spec sheets)

Downlight

2" / 3" / 4" Round / Square Recessed Adjustable
2" / 3" / 4" Round / Square Recessed
2" / 3" / 4" Round / Square Recessed Wall Wash

Multi-aperture

2" / 3" / 4" Round / Square Recessed Adjustable
2" / 3" / 4" Round / Square Recessed
2" / 3" / 4" Round / Square Recessed Wall Wash

Cylinder

2" / 3" / 4" Pendant Pendant Asymmetric Pendant Wall Wash
2" / 3" / 4" Wall Wall Asymmetric
2" / 3" / 4" Surface Surface Asymmetric Surface Wall Wash

www.lumenwerx.com
T (514) 225-4304
© Lumenwerx, ULC. All rights reserved.

Intertek

Lumenwerx reserves the right to modify product specifications without notification.
AERA3-DOWNLIGHT-SQUARE-RECESSED-SPEC-REV1 April 11, 2022

PoE

AERA 3" DOWNLIGHT

SQUARE RECESSED

LUMENWERX

Project: AE3SR-TRM-OF-UNV-10W-RD1
AE3SRB-50-90-40-TMW-TMW

Type: D5/D5E

Order Guide

To specify a Title 24 JA8 compliant fixture, see page 3.

1 - Housing (Example: AE3SR-TRM-SW-OF-ASB-120-10W-D1-NA)

LUMINAIRE ID [1]	TRIM STYLE	LIGHT SOURCE	INSTALLATION TYPE	MOUNTING OPTION [3] Specify NA for Remodel
AE3SR				
AE3SR - Aera 3" Square Recessed [1] Recessed Adjustable and Recessed Wall Wash also available. Consult other spec sheets.	**TRM** - Flanged trim **TLMP** - Trimless drywall mudplate **TLMW** [2] - Trimless millwork [2] Not available with remodel (RM) installation type.	**SW** - Static white **FS** - Full spectrum **SOLA** - Dim-to-warm single channel control 35K to 22K **DUO** - Tunable white 2-channel control 65K to 27K	**OF** - Open Frame Type Non-IC **IC** - Type-IC **RM** - Remodel Type Non-IC **CP** - Chicago Plenum Type-IC (CCEA) **AT** - Airtight Type-IC	**ASB** - Adjustable standard bar hangers **FMB** - Flush mount bars **ACB** - Adjustable commercial bar hangers **AHC** - Adjustable hat channel bars **NA** - Not applicable [3] See page 5 for more details.

VOLTAGE	WATTAGE [5]	DIMMING [6]			OPTION [14]
					NA
120 - 120V **277** - 277V **UNV** - 120V-277V **347** [4] - 347V [4] Available with RD1 driver only. Please consult factory.	**10W** - Low output 902-1132 lm **14W** - Medium output 1233-1545 lm **20W** - High output 1703-2135 lm [5] Lumen outputs are reduced with full spectrum, consult factory. SOLA **12W** - 12 W output, up to 725 lm DUO **11W** - 11 W output, up to 525 lm	**INTEGRAL** **D1** - 1% 0-10V **ELV** [7] - ELV 120V **TRI** [7] - TRIAC 120V **LTEA2W** [7,8] - Lutron 1% - 2 wire FP 120V **LDE1** [8,9] - Lutron Hi-lume 1% Eco **DA** [8,9] - DALI **ELD1** [8] - eldoLED 1% ECOdrive 0-10V **ELD0** [8] - eldoLED 0.1% SOLOdrive 0-10V **PEQ0** [8,9] - Lutron Hi-lume Premier 0.1% EcoSystem [6] PoE (Power-over-Ethernet) compatible. Consult factory for details. [7] Available with 120V only. [8] Not available with **RM** installation type. [9] On-site commissioning is required.	**REMOTE** [10] **RD1** - 1% 0-10V **RELV** [11] - ELV 120V **RTRI** [11] - TRIAC 120V **RLTEA2W** [11] - Lutron 1% - 2 wire FP 120V **RLDE1** [12] - Lutron Hi-lume 1% Eco **RDA** [12] - DALI **RELD1** - eldoLED 1% ECOdrive 0-10V **RELD0** - eldoLED 0.1% SOLOdrive 0-10V **RPEQ0** [12] - Lutron Hi-lume Premier 0.1% EcoSystem **+EB** [13] - Emergency battery [10] A remote driver box is provided, see page 4 for details. [11] Available with 120V only. [12] On-site commissioning is required. [13] For emergency battery, code will be like the following example: **RD1 + EB**		**NA** - None [14] To specify a JA8 compliant fixture, see page 3.
		SOLA **SD1** - 1% 0-10V **SELV** [7] - ELV 120V **STRI** [7] - TRIAC 120V	SOLA **RSD1** - Single 0-10V input **RSELV** [11] - ELV 120V **RSTRI** [11] - TRIAC 120V	DUO **RDMX** [12] - DMX **RDDA** [12] - DALI DT6 **RDDA8** [12] - DALI DT8 **RDD1** - Dual 0-10V input for CCT/intensity **RPSQ0** [12] - Lutron T-Series 1% tunable white	

2 - Light & Baffle (Example: AE3SRB-SW-15-2-90-27-LS-TRM-SDL-TMW-TMW-NA)

LUMINAIRE ID	LIGHT SOURCE	BEAM	COLOR QUALITY	CRI	COLOR TEMP.
AE3SRB					
AE3SRB - Aera 3" Square Recessed Bevel	**SW** - Static white **FS** - Full spectrum	**15** - 15° Spot **25** - 25° Spot **35** - 35° Narrow flood **50** - 50° Wide flood **80** - 80° Very wide flood **90** - 90° Open flood	**2** [15] - 2 Step MacAdam Ellipse **3** - 3 Step MacAdam Ellipse [15] Not available with full spectrum.	**90** [16] - 90 CRI **95** - 95 CRI **80** [16] - 80 CRI [16] Not available with full spectrum.	**27** - 2700K **30** - 3000K **35** - 3500K **40** - 4000K
	SOLA - Dim-to-warm single channel control 35K to 22K **DUO** - Tunable white 2-channel control 65K to 27K	**50** - 50° Wide flood	**3** - 3 Step MacAdam Ellipse	**90** - 90 CRI	**SOLA** - Dim-to-warm single channel control 35K to 22K **DUO** - Tunable white 2-channel control 65K to 27K

OPTICAL OPTIONS	TRIM STYLE	LENS	BAFFLE FINISH	TRIM FLANGE FINISH Specify NA for Bevel Trimless	OPTIONS [19]
LS [17] - Linear spread **HEX** [17] - Hex louver **NA** - None [17] Hex louver and linear spread cannot be used together.	**TRM** - Flanged trim **TLMP** - Trimless drywall mudplate **TLMW** [18] - Trimless millwork [18] Not available with remodel (RM) installation type.	**SDL** - Soft diffused lens **FDL** - Frosted diffused lens **CL** - Clear lens **NOL** - No lens	**TMW** - Textured matte white **TMB** - Textured matte black **SPC** - Specular **SSPC** - Semi-specular **CHP** - Champagne **CF#** - Custom finish, specify RAL#	**TMW** - Textured matte white **TMB** - Textured matte black **SPC** - Specular **SSPC** - Semi-specular **CHP** - Champagne **CF#** - Custom finish, specify RAL# **NA** - Not applicable	**WET** [20] - Wet location **NA** - None [19] To specify a JA8 compliant fixture, see page 3. [20] Must be specified with the flanged trim (TRM), and either SDL, FDL, or CL lens options.

www.lumenwerx.com
T (514) 225-4304
© Lumenwerx, ULC. All rights reserved.

Lumenwerx reserves the right to modify product specifications without notification.

AERA 3" DOWNLIGHT

LUMENWERX

SQUARE RECESSED

Title 24 JA8

Project: AE3SR-TRM-OF-UNV-10W-RD1
AE3SRB-50-90-40-TMW-TMW

Type: D5/D5E

COMPLIANT WITH JA8 TITLE 24

Order Guide

1 - Housing (Example: AE3SR-TRM-SW-AT-ASB-120-10W-D1-JA8)

LUMINAIRE ID [1]	TRIM STYLE	LIGHT SOURCE	INSTALLATION TYPE	MOUNTING OPTION [2]
AE3SR			**AT**	
AE3SR - Aera 3" Square Recessed [1] Recessed Adjustable and Recessed Wall Wash also available. Consult other spec sheets.	**TRM** - Flanged trim **TLMP** - Trimless drywall mudplate **TLMW** - Trimless millwork	**SW** - Static white **SOLA** - Dim-to-warm single channel control 35K to 22K	**AT** - Airtight Type-IC	**ASB** - Adjustable standard bar hangers **FMB** - Flush mount bars **ACB** - Adjustable commercial bar hangers **AHC** - Adjustable hat channel bars [2] See page 5 for more details.

VOLTAGE	WATTAGE	DIMMING		OPTION
				JA8
120 - 120V **277** - 277V **UNV** - 120V-277V	**10W** - Low output 902-1132 lm **14W** - Medium output 1233-1545 lm	**INTEGRAL** **D1** - 1% 0-10V **ELV** [3] - ELV 120V **TRI** [3] - TRIAC 120V **LTEA2W** [3] - Lutron 1% - 2 wire FP 120V **LDE1** [4] - Lutron Hi-lume 1% Eco [3] Available with 120V only. [4] On-site commissioning is required.	**REMOTE** [5] **RD1** - 1% 0-10V **RELV** [6] - ELV 120V **RTRI** [6] - TRIAC 120V **RLTEA2W** [6] - Lutron 1% - 2 wire FP 120V **RLDE1** [7] - Lutron Hi-lume 1% Eco [5] A remote driver box is provided, see page 4 for details. [6] Available with 120V only. [7] On-site commissioning is required.	**JA8** - JA8 compliant
	12W - 12 W output, up to 725 lm	**SD1** - 1% 0-10V **SELV** [3] - ELV 120V **STRI** [3] - TRIAC 120V	**RSD1** - Single 0-10V input **RSELV** [6] - ELV 120V **RSTRI** [6] - TRIAC 120V	

2 - Light & Baffle (Example: AE3SRB-SW-15-2-90-27-NA-TRM-SDL-TMW-TMW-JA8-WET)

LUMINAIRE ID	LIGHT SOURCE	BEAM	COLOR QUALITY	CRI	COLOR TEMP.
AE3SRB				**90**	
AE3SRB - Aera 3" Square Recessed Bevel	**SW** - Static white	**15** - 15° Spot **25** - 25° Spot **35** - 35° Narrow flood **50** - 50° Wide flood **80** - 80° Very wide flood **90** - 90° Open flood	**2** - 2 Step MacAdam Ellipse **3** - 3 Step MacAdam Ellipse	**90** - 90 CRI	**27** - 2700K **30** - 3000K **35** - 3500K **40** - 4000K
	SOLA - Dim-to-warm single channel control 35K to 22K	**50** - 50° Wide flood	**3** - 3 Step MacAdam Ellipse		**SOLA** - Dim-to-warm single channel control 35K to 22K

OPTICAL OPTION	TRIM STYLE	LENS	BAFFLE FINISH	TRIM FLANGE FINISH Specify NA for Bevel Trimless	OPTIONS
NA					**JA8**
NA - None	**TRM** - Flanged trim **TLMP** - Trimless drywall mudplate **TLMW** - Trimless millwork	**SDL** - Soft diffused lens **FDL** - Frosted diffused lens **CL** - Clear lens **NOL** - No lens	**TMW** - Textured matte white **TMB** - Textured matte black **SPC** - Specular **SSPC** - Semi-specular **CHP** - Champagne **CF#** - Custom finish, specify RAL#	**TMW** - Textured matte white **TMB** - Textured matte black **SPC** - Specular **SSPC** - Semi-specular **CHP** - Champagne **CF#** - Custom finish, specify RAL# **NA** - Not applicable	**JA8** - JA8 compliant **WET** [8,9] - Wet location [8] Must be specified with the flanged trim (TRM), and either SDL, FDL, or CL lens options. [9] To specify the WET option, the code will be JA8-WET.

www.lumenwerx.com
T (514) 225-4304
© Lumenwerx, ULC. All rights reserved.

Intertek

Lumenwerx reserves the right to modify product specifications without notification.
AERA3-DOWNLIGHT-SQUARE-RECESSED-SPEC-REV1 April 11, 2022

AERA 3" DOWNLIGHT

SQUARE RECESSED

LUMENWERX

Housing

INSTALLATION TYPES

OF - Open Frame Type Non-IC	**IC -** Type-IC	**CP -** Chicago Plenum Type-IC (CCEA) **AT** - Airtight Type-IC
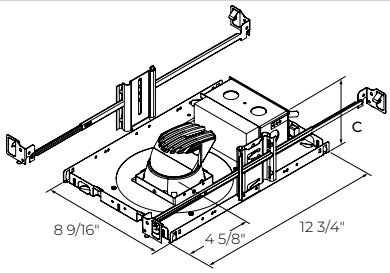	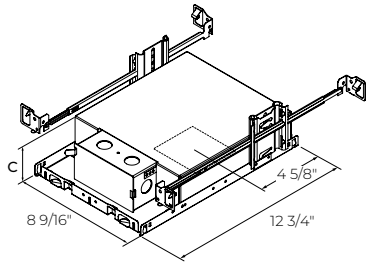	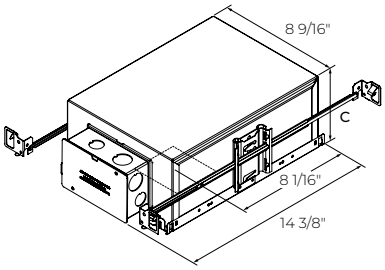

RM - Remodel Type Non-IC	
Integral	Remote
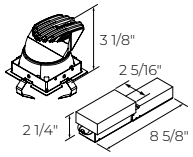	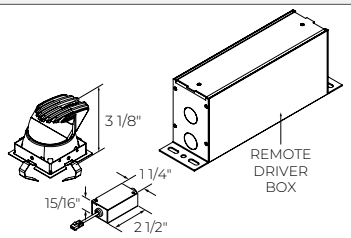

- For height dimension C, see the PLENUM CLEARANCE & CUT-OUT DIMENSIONS table below.
- For OF, IC, and CP installation types with remote dimming, a remote driver box is provided.

REMOTE DRIVER BOX

RDB8 / RDB18 / RDB24

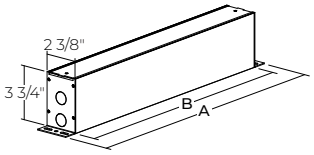

RDB24W

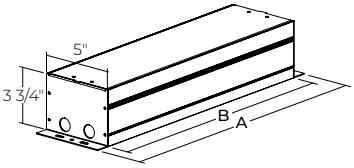

	RDB8	RDB18	RDB24	RDB24W
A	10"	20"	26"	26"
B	8"	18"	24"	24"
DRIVER	**RD1** - 1% 0-10V **RELV** - ELV 120V **RTRI** - TRIAC 120V **RPEQ0** - Lutron Hi-lume Premier 0.1% EcoSystem SOLA **RSD1** - Single 0-10V input **RSELV** - ELV 120V **RSTRI** - TRIAC 120V	**RLTEA2W** - Lutron 1% - 2 wire FP 120V **RLDE1** - Lutron Hi-lume 1% Eco **RDA** - DALI **RELD1** - eldoLED 1% ECOdrive 0-10V **RELD0** - eldoLED 0.1% SOLOdrive 0-10V	Emergency battery (+EB) with the following driver options. **RD1+EB** - 1% 0-10V **RELV+EB** - ELV 120V **RTRI+EB** - TRIAC 120V DUO **RDMX** - DMX **RDDA** - DALI **RDD1** - Dual 0-10V input for CCT/intensity **RPSQ0** - Lutron T-Series 1% tunable white	Emergency battery (+EB) with the following driver options. **RLTEA2W+EB** - Lutron 1% - 2 wire FP 120V **RLDE1+EB** - Lutron Hi-lume 1% Eco **RDA+EB** - DALI **RELD1+EB** - eldoLED 1% ECOdrive 0-10V **RELD0+EB** - eldoLED 0.1% SOLOdrive 0-10V

PLENUM CLEARANCE & CUT-OUT DIMENSIONS

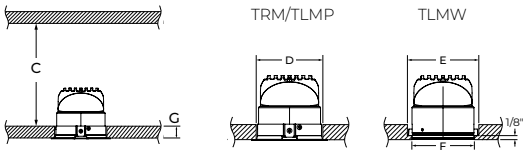

		PLENUM CLEARANCE HEIGHT	
		REMOTE & INTEGRAL	
		D1/ELV/TRI	LTEA2W/LDE1/DA /ELD1/ELD0/PEQ0
C	OF	2 5/8" (FMB) 4 1/8"	6"
	IC	2 5/8" (10 W - FMB) 4" (10 W - ASB, ACB, AHC) 4" (14 W) 6 3/8" (20 W)	6 3/8"
	CP /AT	4 7/8" (14 W) 6 7/8" (20 W)	6 7/8"
	RM	4 1/8"	NA

	CUT-OUT DIMENSIONS	
D	TRM/ TLMP	3 1/2" x 3 1/2"
E	TLMW	3 1/2" x 3 1/2"
F		3 1/16" x 3 1/16" with 1/8" lip

	MAXIMUM CEILING THICKNESS	
G	TRM/ TLMP	1 3/8"
	TLMW	5/8"

www.lumenwerx.com
T (514) 225-4304
© Lumenwerx, ULC. All rights reserved.

Intertek

Lumenwerx reserves the right to modify product specifications without notification.
AERA3-DOWNLIGHT-SQUARE-RECESSED-SPEC-REV1 April 11, 2022

AERA 3" DOWNLIGHT

SQUARE RECESSED

LUMENWERX

Housing

MOUNTING OPTIONS	
ASB - Adjustable Standard Bar Hangers	
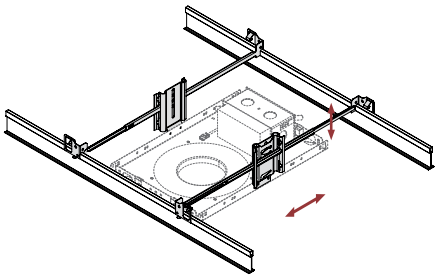	Adjustable Standard Bar hangers can be used in both commercial and residential applications and are adjustable to various heights in both Grid Ceiling and Drywall mounting. ASB hangers are less rigid and versatile than ACB hangers.
FMB - Flush Mount Bars	
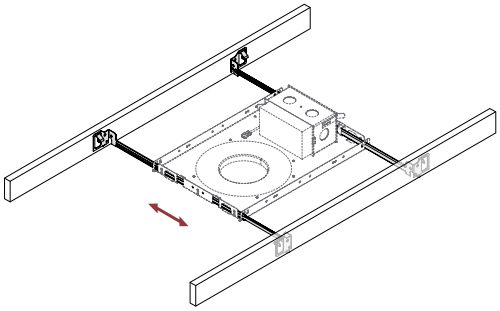	Flush Mount Bars are best used in residential applications, fitting snug to the surface and suitable for Wood, Metal, and Drywall mounting. The flush mounted bars are static and can't be adjusted.
ACB - Adjustable Commercial Bar Hangers	
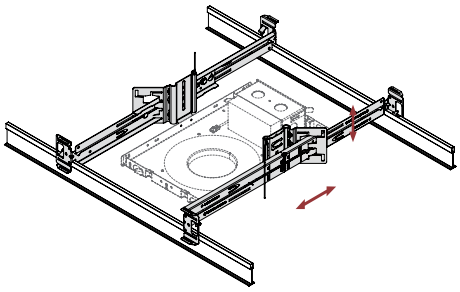	Adjustable Commercial Bar hangers can be used in both commercial and residential applications and are by far the most versatile mounting bar we offer with its adjustability to various heights. ACB hangers are suitable for Grid Ceiling, Drywall, Metal, Wood and Frame mounting. · Extremely rigid · Fits into C-Channel notches in a Butterfly Bracket
AHC - Adjustable Hat Channel Bars	
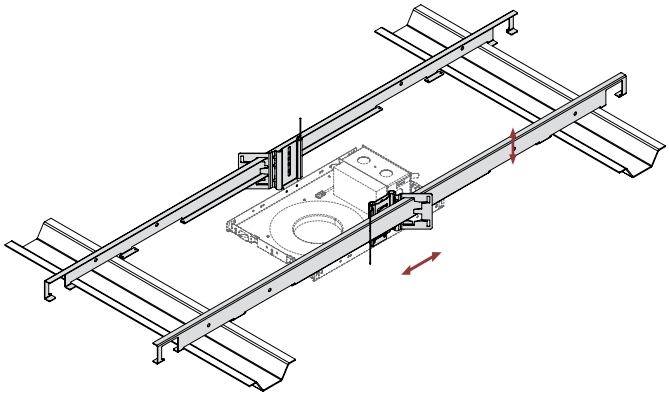	Adjustable Hat Channel bars can be used in both commercial and residential applications and come with a butterfly clip to adjust to various heights. AHC bars can be hung downward by 90 degrees in vertical position, and once wired, can be shifted onto the horizontal mounting plane. AHC bars are suitable for both Drywall and wood ceiling applications.

www.lumenwerx.com
T (514) 225-4304
© Lumenwerx, ULC. All rights reserved.

Intertek

Lumenwerx reserves the right to modify product specifications without notification.
AERA3-DOWNLIGHT-SQUARE-RECESSED-SPEC-REV1 April 11, 2022

LITECONTROL
making light work™

DATE:	LOCATION:
TYPE: L2	PROJECT:
CATALOG #:	

4L-P-D

MOD™ 3 LED PENDANT DIRECT

MODX™

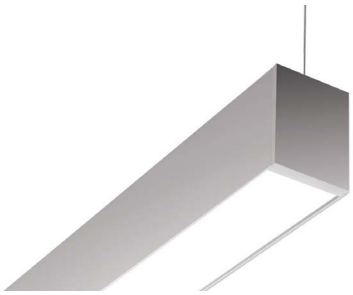

FEATURES

- Variable Intensity technology provides a range of specifiable outputs and resulting fixture wattages
- 2 SDCM color consistency
- End cap design eliminates visible diffuser seams/gaps

See Certification Specifications

CONTROLS

NX DISTRIBUTED™ INTELLIGENCE SpectraSync™

RELATED PRODUCTS

2L-P-D 3L-P-D 6L-P-D

SERVICE PROGRAMS

QS

SPECIFICATIONS

CONSTRUCTION

- Housing constructed from extruded aluminum
- End caps constructed from die cast aluminum with magnetic interface
- End caps overlap diffuser at each fixture end to elimate gaps and LED visibility

OPTICAL PERFORMANCE

- 2 SDCM color consistency, 80 or 90 CRI
- SOF: Soft diffuse acrylic lens
- REG: ½" regressed softglo lens with painted steel inserts. Output multiplier (.77)
- BWO: White blade baffle with softglo lens overlay. Output multiplier (.70)
- ASYM: Asymmetric Highly transmissive diffuse acrylic lens with linear prisms
- BAT: "Batwing" distribution created created from highly transmissive diffuse acrylic lens with linear prisms
- DRP: 1/2" protruding soft diffuse "drop" lens

INSTALLATION

- Suspension required at every row joint. 3/64" diameter field-adjustable aircraft cables, ships separately
- Low profile cable gripper limits visibility while providing maximum horizontal balance adjustment
- Pendant locations at ends of rows (or individual fixtures) are 1/2" from fixture ends
- Pendant attachment allows for horizontal adjustment to "fine-tune" side-to-side leveling
- Illuminated corners available in 90°, 120°, 135°. One piece construction, ready to install, with diffusers that match adjoining fixtures. Corner system connectors must be used to form patterns. The length of each outside or inside illuminated corner is 12"

INSTALLATION (CONTINUED)

- Square and Triangle non-illuminated connectors match fixture width for continuous look
- Fixture weight: 3lbs/ft

ELECTRICAL

- Variable Intensity (VI) technology allows precise specification of fixture output/ wattage. Fixture will be programmed and labeled to specification. Indirect and direct hemispheres can be independently specified
- LED boards and drivers can be accessed and removed from fixture, while installed
- Entire LED module can be removed and replaced
- 1C (1 Circuit) Fixture wired for a single circuit
- Non-feed: 2" diameter canopy covers provided (unless 5" non-feed cover is specified)
- Feed Cord: 4-wire, 7 amps max; 5-wire, 5 amps max
- Emergency Battery: 10W battery powered driver. Provides a minimum of 90 minutes of emergency lighting. Inverter-Compatible. Provided by others. Available in 4'+' fixtures

CONTROLS

- Sensors install between diffusers
- NX Distributed Intelligence™: Supports indoor and outdoor applications, wired, wireless and hybrid networked NX lighting control deployments and enabled emerging applications, such as Hubbell Lighting's SpectraSync™ Color Tuning Technology
- SpectraSync™ Color Tuning Technology: Control your space based on the needs of the application, specific activities throughout the day and preferences of the occupants

CERTIFICATIONS

- DLC® (DesignLights Consortium) Qualified - see www.designlights.org
- CSA listed for damp location
- IBEW
- AF of L
- UL924
- This product qualifies as a "designated country construction material" per FAR 52.225-11 Buy American-Construction. Materials under Trade Agreements effective 8/14/2020. See Buy American Solutions. Contact factory for configurations including SpectraSync, NX, or sensors.

WARRANTY

- LED boards - 5 years
- LED drivers (standard) - 5 years
- LED drivers (Lutron) - 3 years
- See www.litecontrol.com for details

KEY DATA	
Lumen Range Per Foot	D: 300 - 1100
Wattage Range Per Foot	2.6-10.0
Efficacy Range (LPW)	110-118
Rated Life (Hours)	L70: >61,000 L90: >61,000

© 2021 Litecontrol a division of Hubbell Lighting, Inc. Specifications subject to change without notice.
65 Spring Street Plympton, MA 02367 / Tel 781.294.0100 / Website www.litecontrol.com

HUBBELL Lighting

LITECONTROL
making light work™

4L-P-D

MOD™ 3 LED PENDANT DIRECT

DATE: | LOCATION:

TYPE: L2 | PROJECT:

CATALOG #:

= Service Program

QS

Click icon for a list of Quick-Ship options

ORDERING GUIDE

Example: 4L-P-D-8-08-SOF-C1-27K-D030-D01-1C-UNV-FA1

CATALOG # 4L-P-D-2

4L	P	D	2	02	SOF	C1
Series	**Mounting**	**Fixture Distribution**	**Row Length (In Feet)**	**Max Length In Row**	**Direct Optical Distribution**	**Finish/Color [4]**
4L MOD	**P** Pendant	**D** Direct	**__'** Enter in foot increments	**02** 2', 609mm	**SOF** Soft Diffuse Lens, Lambertian	**C1** Matte White (Default)
		AD Asymmetric Direct		**03** 3', 914mm	**REG** Regressed Diffuse Lens [1]	**C2** Textured Matte White
				04 4', 1219mm	**BWO** Blade Baffle with Overlay [1]	**C3** Light Silver
				05 5', 1524mm	**ASYM** Asymmetric Diffuse Lens [1, 2]	**C4** Machined Aluminum
				06 6', 1829mm	**BAT** Batwing Lens	**C5** Carbon Black
				08 8', 2438mm	**DRP** Drop Lens [1, 3]	**C6** Textured Camera Black
						CC Custom Color

2750T	375 LM	D01		UNV	
Color Temperature	**Direct Output/ft [6]**	**Driver**	**Circuiting**	**Voltage**	**Suspension Kit [10]**
27K 2700K [3]	**D030** 300 (min) [7]	**D01** 1% Dimming, 0-10V	**1C** 1 Circuit	**UNV** Universal Voltage (120V through 277V)	**FA1** Suspension Kit, 51"
30K 3000K	*to*	**D00** 1% Dim-to-Off, 0-10V		**347** 347 Volt [3, 9]	**FA2** Suspension Kit, 87"
35K 3500K	**D125** 1250 (max)	**D05** SpectraSync 5% Dimming, 0-10V [8]			**FA3** Suspension Kit, 219"
40K 4000K		**DS1** 1% Dimming w/ Soft Start, 0-10V			**FA4** Suspension Kit, 363"
50K 5000K [3]		**DS0** 1% Dim-to-Off w/ Soft Start, 0-10V			
27K9 2700K, 90 CRI [3]		**LEC** Hi-lume 1% Ecosystem LED Driver			
30K9 3000K, 90 CRI		**DALI** DALI [3]			
35K9 3500K, 90 CRI		**DALIP** Powered by DALI (2.0) [3]			
40K9 4000K, 90 CRI		**NDM** Non-Dimming			
50K9 5000K, 90 CRI [3]					
2230TD 2200K-3000K SpectraSync™ Dim-to-Warm [5]					
2750T 2700K-5000K SpectraSync™ Tunable White [5]					
2765T 2700K-6500K SpectraSync™ Tunable White [5]					

OPTIONAL

Nightlight	Emergency	Thru-wiring	Patterns [3, 13]	T-Bar Clips [14]
NL Nightlight Circuit Required. Enter quantity. 2NL = 2 nightlight circuits/row	**EF** 10W Emergency Battery Pack. Enter quantity. 2EF = 2 emergency batteries/row. [11]	**W1** No Thru Wire	**C90L** Illuminated 90° Corner	**CB1** T-bar clip - 15/16"
		W2 Provide Normal and Emergency/ Nightlight Thru Wiring [12]	**C120L** Illuminated 120° Corner	**CB2** T-bar clip - 9/16"
		W3 Provide Normal Thru Wiring Only	**C135L** Illuminated 135° Corner	**CB3** T-bar clip - 9/16" SS

Control Options [3]

NX Standalone

NXS NX, PIR BT Occupancy/Daylight Sensor, Slide Mount [15, 16, 17]

NX Networked – Wired

NXE NX, Dual SmartPORTs [15, 16]

NXES NX, PIR BT Occupancy/Daylight Sensor, Slide Mount, Dual SmartPORTs [15, 16]

NX Networked – Wireless

NXSW NX Wireless, PIR BT Occupancy/Daylight Sensor [15, 16, 17]

NXWE NX Wireless Wireless Enabled [15, 16]

NX Networked – Wired/Wireless

NXSWD NX Wireless, PIR BT Occupancy/Daylight Sensor, Dual SmartPORTs [15, 16, 17]

NXWD NX Wireless, Dual SmartPORTs [15, 16]

Sensors

SD1 Daylight Sensor Required. Enter quantity. 2SD1 = 2 daylight sensors/row

SO1 Occupancy Sensor Required. Enter quantity. 2SO1 = 2 occupancy sensors/row

Notes:

1 Not Available with Patterns.
2 Must be ordered with AD.
3 Additional lead time may be applicable. Contact factory.
4 Visit www.litecontrol.com/finishes for details.
5 Must be ordered with D05 Driver option; excludes 2' lengths and patterns.
6 Specifiable in 50 lumen increments. Reference the Performance Data Table for full performance offering and exceptions.
7 D030 not available in 2'
8 Must be ordered with 2230TD, 2750T or 2765T Option
9 Excludes Emergency Battery Pack 'EF' Option. Excludes DALI, DALIP and Lutron (LEC) Dimming Drivers
10 Add suffix /V to replace all 2" non-feed canopy covers with 5" canopy covers. FA1/V = 51" suspension kit w/ 5" canopies; canopies and feed cord are supplied in white regardless of fixture color unless otherwise specified.
11 EF - 10W battery powered driver. Provides a minimum of 90 minutes of emergency lighting. Inverter-Compatible. Provided by others.
12 Only applicable when specified with Emergency/Nightlight.
13 Contact Factory for pattern configurations. Approval drawings required.
14 Includes Luminaire Canopy Box.

NX In-Fixture Control Options:

15 Not available for row mounting. Only available with 0-10V Driver options. Contact factory for Length restrictions.
16 Refer to NX Integrated Controls Reference Table for Functionality of Options.
17 NX Sensors with Bluetooth, BLE, provides remote commission only.

© 2021 Litecontrol, a division of Hubbell Lighting, Inc. Specifications subject to change without notice.
65 Spring Street Plympton, MA 02367 / Tel 781.294.0100 / Website www.litecontrol.com

HUBBELL Lighting

DATE: | LOCATION:
TYPE: L2 | PROJECT:
CATALOG #:

4L-P-D

MOD™ 3 LED PENDANT DIRECT

CONTROLS

NX DISTRIBUTED™ INTELLIGENCE

NX Distributed Intelligence™ Lighting Controls:

Supports both indoor and outdoor applications in a variety of deployment options- wired, wireless, hybrid.
Integrates with and enables a wide array of luminaires including those with SpectraSync Color Tuning Technology.

NX INTEGRATED CONTROLS REFERENCE								
NX Option	Sensor	Networkable	Scheduling	Occupancy	Daylight Harvesting	0–10V Dimming	On/off Control	Bluetooth® App Programming
NX Standalone								
NXS	NXSMP-SMI	No	Yes	Yes	Yes	Yes	Yes	Yes
NX Networked – Wired								
NXE	N/A	Yes	Yes	No	No	Yes	Yes	Requires NXBTC/R [1]
NXES	NXSMP-SMI	Yes	Yes	Yes	Yes	Yes	Yes	Yes
NX Networked – Wireless								
NXSW	NXSMP-SMI	Yes	Yes	Yes	Yes	Yes	Yes	Yes
NXWE [2]	N/A	Yes	Yes	No	No	Yes	Yes	No[3]
NX Networked – Wired/Wireless								
NXSWD	NXSMP-SMI	Yes	Yes	Yes	Yes	Yes	Yes	Yes
NXWD	N/A	Yes	Yes	No	No	Yes	Yes	Requires NXBTC/R [1,3]

1 NXBTC/R needs to be plugged into an available NX SmartPort™ on the fixture network
2 Programming via App requires factory assistance
3 To program NXWE option, need to consult factory. If connected to an area controller, programming can be done from that

SpectraSync™ Color Tuning Technology:

Control your space based on the needs of the application, specific activities throughout the day and preferences of the occupants with distinct SpectraSync™ Color Tuning Technologies.

SpectraSync™ Color Tuning Technology

SPECTRASYNC COLOR TUNING TECHNOLOGY		
Mode	Kelvin Range	Description
Dim to Warm	2200K-3000K	Mimics the familiar warming effect that occurs with traditional incandescent sources as they are dimmed
Tunable White	2700K-5000K 2700K-6500K	Offers users the ability to tailor CCT to their personal preference, enhancing task visibility, material and colors or the aesthetics of the space
Scheduled White	2700K-5000K 2700K-6500K	Mimics the rhythm of natural light or follows an alternative user-defined schedule throughout the day, enhancing an occupant's mood and well-being

SpectraSync Tunable White

Available in two options: 2750T (2700K–5000K) or 2765T (2700K–6500K).
Requires two 0–10V controllers, one for intensity and one for CCT.
Minimum 5% dimming.

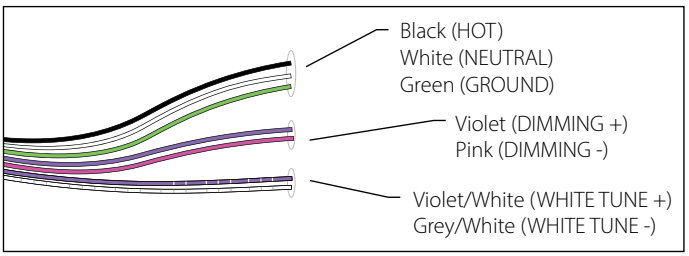

SpectraSync Tunable White luminaires are provided with two 0–10V circuits. The violet and pink circuit is for wiring to any qualified 0–10V controller for dimming. The violet/white and grey/white circuit is for wiring to any qualified 0–10V controller for Tunable White CCT control.

Controller Manufacturer Data

SpectraSync Tunable White was designed to be used with sinking style dimmers (provided by others) and is compatible with:

- Hubbell Control Solutions (HCS): NX Distributed Intelligence™ Room Controllers (NXRC) and In-fixture Controllers (NXFM)
- Lutron: DVTV, DVSTV, and NFTV dimmers
- Wattstopper: ADF120277 and CD4BL (Titan) dimmers

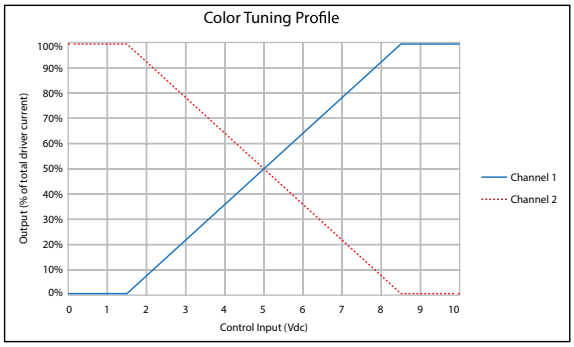

NX Design & Application Guide
NX Brochure
SpectraSync
NX Solutions Guide

© 2021 Litecontrol, a division of Hubbell Lighting, Inc. Specifications subject to change without notice.
65 Spring Street Plympton, MA 02367 / Tel 781.294.0100 / Website www.litecontrol.com

LITECONTROL
making light work™

DATE: | LOCATION:
TYPE: L2 | PROJECT:
CATALOG #:

4L-P-D

MOD™ 3 LED PENDANT DIRECT

PERFORMANCE DATA TABLE

The table below shows the delivered lumens for the various lumen outputs. Use this chart in connection with the output multiplier capability to deliver any output required.

Nomenclature	Lumens/Ft	W/Ft	Efficacy
Downlight			
D030 (min)	300	2.6	118
D035	350	3.0	118
D040	400	3.4	118
D045	450	3.8	118
D050	500	4.2	118
D055	550	4.7	117
D060	600	5.1	117
D065	650	5.6	116
D070	700	6.1	116
D075	750	6.5	115
D080	800	7.0	115
D085	850	7.5	113
D090	900	7.9	113
D095	950	8.5	112
D100	1000	9.0	112
D105	1050	9.4	111
D110 (max)	1100	10.0	110

(wattage may vary up to 5% from published)

Output Restrictions

Driver options listed below are not available for the output and length as shown.

Restrictions - Direct		Output LPA						
		300	350	400	450	500	950	1000
Length (feet)	2	LEC, DALI, 347V	LEC, DALI, 347V	DALI, 347V	DALI, 347V	DALI, 347V	LEC	LEC
	3	DALI, 347V	DALI, 347V				LEC	LEC
	4						LEC	LEC
	5						LEC	LEC
	6						LEC	LEC
	8						LEC	LEC

Output Multiplier Table

Photometrics for the 4L are published here at a nominal 3500K temperature. This table may be used to approximate the lumen values at different Kelvin temperatures. Power consumption would stay the same.

Option	2700K	3000K	3500K	4000K	5000K	2700K 90 CRI	3000K 90 CRI	3500K 90 CRI	4000K 90 CRI	5000K 90 CRI
SOF	0.95	0.98	1.00	1.03	1.05	0.83	0.85	0.88	0.90	0.93
REG	0.73	0.75	0.77	0.79	0.81	0.64	0.65	0.68	0.69	0.72
BWO	0.67	0.69	0.70	0.72	0.76	0.63	0.53	0.47	0.42	0.39
ASYM	0.95	0.98	1.00	1.03	1.05	0.83	0.85	0.88	0.90	0.93
BAT	0.95	0.98	1.00	1.03	1.05	0.83	0.85	0.88	0.90	0.93
DRP	0.95	0.98	1.00	1.03	1.05	0.83	0.85	0.88	0.90	0.93
LPAD	0.86	0.88	0.90	0.93	0.95	0.75	0.77	0.79	0.81	0.84

© 2021 Litecontrol, a division of Hubbell Lighting, Inc. Specifications subject to change without notice.
65 Spring Street Plympton, MA 02367 / Tel 781.294.0100 / Website www.litecontrol.com

HUBBELL Lighting

LITECONTROL
making light work™

DATE:	LOCATION:
TYPE: L2	PROJECT:
CATALOG #:	

4L-P-D

MOD™ 3 LED PENDANT DIRECT

DIMENSIONS

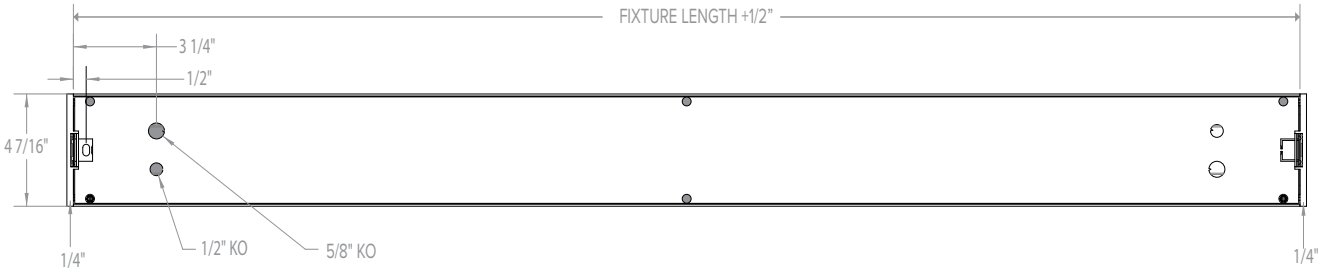

INDIVIDUAL MOUNTING

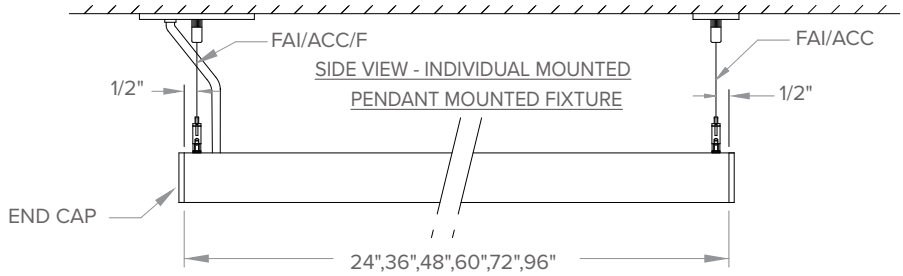

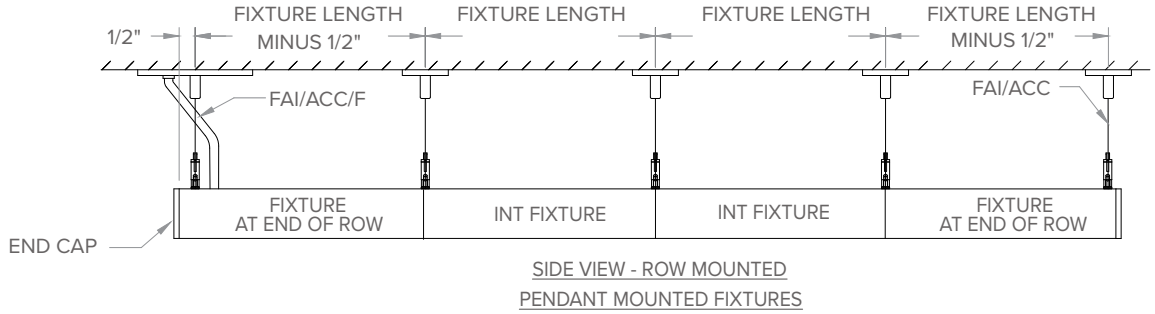

ROW MOUNTING

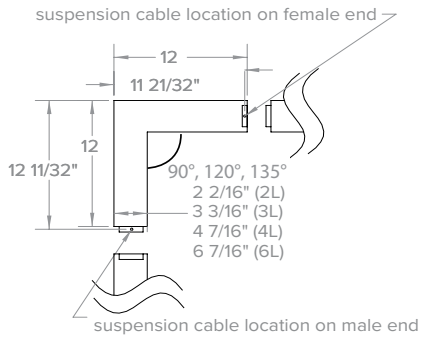

PATTERNS

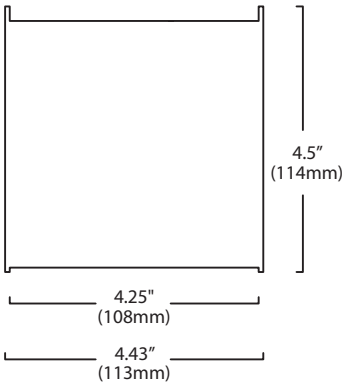

END CAP VIEW

© 2021 Litecontrol, a division of Hubbell Lighting, Inc. Specifications subject to change without notice.

65 Spring Street Plympton, MA 02367 / Tel 781.294.0100 / Website www.litecontrol.com

HUBBELL Lighting

LITECONTROL
making light work™

DATE:	LOCATION:
TYPE: L3/L3E	PROJECT:
CATALOG #:	

4L-P-D

MOD™ 3 LED PENDANT DIRECT

MODX

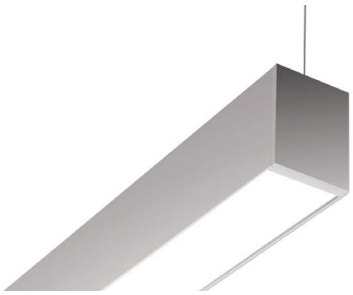

FEATURES

- Variable Intensity technology provides a range of specifiable outputs and resulting fixture wattages
- 2 SDCM color consistency
- End cap design eliminates visible diffuser seams/gaps

See Certification Specifications

CONTROLS

NX DISTRIBUTED INTELLIGENCE™ SpectraSync™

RELATED PRODUCTS

2L-P-D 3L-P-D 6L-P-D

SERVICE PROGRAMS

QS

SPECIFICATIONS

CONSTRUCTION

- Housing constructed from extruded aluminum
- End caps constructed from die cast aluminum with magnetic interface
- End caps overlap diffuser at each fixture end to elimate gaps and LED visibility

OPTICAL PERFORMANCE

- 2 SDCM color consistency, 80 or 90 CRI
- SOF: Soft diffuse acrylic lens
- REG: ½" regressed softglo lens with painted steel inserts. Output multiplier (.77)
- BWO: White blade baffle with softglo lens overlay. Output multiplier (.70)
- ASYM: Asymmetric Highly transmissive diffuse acrylic lens with linear prisms
- BAT: "Batwing" distribution created created from highly transmissive diffuse acrylic lens with linear prisms
- DRP: 1/2" protruding soft diffuse "drop" lens

INSTALLATION

- Suspension required at every row joint. 3/64" diameter field-adjustable aircraft cables, ships separately
- Low profile cable gripper limits visibility while providing maximum horizontal balance adjustment
- Pendant locations at ends of rows (or individual fixtures) are 1/2" from fixture ends
- Pendant attachment allows for horizontal adjustment to "fine-tune" side-to-side leveling
- Illuminated corners available in 90°, 120°, 135°. One piece construction, ready to install, with diffusers that match adjoining fixtures. Corner system connectors must be used to form patterns. The length of each outside or inside illuminated corner is 12"

INSTALLATION (CONTINUED)

- Square and Triangle non-illuminated connectors match fixture width for continuous look
- Fixture weight: 3lbs/ft

ELECTRICAL

- Variable Intensity (VI) technology allows precise specification of fixture output/ wattage. Fixture will be programmed and labeled to specification. Indirect and direct hemispheres can be independently specified
- LED boards and drivers can be accessed and removed from fixture, while installed
- Entire LED module can be removed and replaced
- 1C (1 Circuit) Fixture wired for a single circuit
- Non-feed: 2" diameter canopy covers provided (unless 5" non-feed cover is specified)
- Feed Cord: 4-wire, 7 amps max; 5-wire, 5 amps max
- Emergency Battery: 10W battery powered driver. Provides a minimum of 90 minutes of emergency lighting. Inverter-Compatible. Provided by others. Available in 4'+' fixtures

CONTROLS

- Sensors install between diffusers
- NX Distributed Intelligence™: Supports indoor and outdoor applications, wired, wireless and hybrid networked NX lighting control deployments and enabled emerging applications, such as Hubbell Lighting's SpectraSync™ Color Tuning Technology
- SpectraSync™ Color Tuning Technology: Control your space based on the needs of the application, specific activities throughout the day and preferences of the occupants

CERTIFICATIONS

- DLC® (DesignLights Consortium) Qualified - see www.designlights.org
- CSA listed for damp location
- IBEW
- AF of L
- UL924
- This product qualifies as a "designated country construction material" per FAR 52.225-11 Buy American-Construction. Materials under Trade Agreements effective 8/14/2020. See Buy American Solutions. Contact factory for configurations including SpectraSync, NX, or sensors.

WARRANTY

- LED boards - 5 years
- LED drivers (standard) - 5 years
- LED drivers (Lutron) - 3 years
- See www.litecontrol.com for details

KEY DATA	
Lumen Range Per Foot	D: 300 - 1100
Wattage Range Per Foot	2.6-10.0
Efficacy Range (LPW)	110-118
Rated Life (Hours)	L70: >61,000 L90: >61,000

© 2021 Litecontrol a division of Hubbell Lighting, Inc. Specifications subject to change without notice.
65 Spring Street Plympton, MA 02367 / Tel 781.294.0100 / Website www.litecontrol.com

HUBBELL Lighting

LITECONTROL
making light work™

4L-P-D

MOD™ 3 LED PENDANT DIRECT

DATE: | LOCATION:

TYPE: L3/L3E | PROJECT:

CATALOG #:

= Service Program

QS 10

Click icon for a list of Quick-Ship options

ORDERING GUIDE

Example: 4L-P-D-8-08-SOF-C1-27K-D030-D01-1C-UNV-FA1

CATALOG # 4L-P-D-3

4L	P	D	3	03	SOF	C1
Series	**Mounting**	**Fixture Distribution**	**Row Length (In Feet)**	**Max Length In Row**	**Direct Optical Distribution**	**Finish/Color [4]**
4L MOD	**P** Pendant	**D** Direct	**__'** Enter in foot increments	**02** 2', 609mm	**SOF** Soft Diffuse Lens, Lambertian	**C1** Matte White (Default)
		AD Asymmetric Direct		**03** 3', 914mm	**REG** Regressed Diffuse Lens [1]	**C2** Textured Matte White
				04 4', 1219mm	**BWO** Blade Baffle with Overlay [1]	**C3** Light Silver
				05 5', 1524mm	**ASYM** Asymmetric Diffuse Lens [1, 2]	**C4** Machined Aluminum
				06 6', 1829mm	**BAT** Batwing Lens	**C5** Carbon Black
				08 8', 2438mm	**DRP** Drop Lens [1, 3]	**C6** Textured Camera Black
						CC Custom Color

2750T	375 LM	D01		UNV	
Color Temperature	**Direct Output/ft [6]**	**Driver**	**Circuiting**	**Voltage**	**Suspension Kit [10]**
27K 2700K [3]	**D030** 300 (min) [7]	**D01** 1% Dimming, 0-10V	**1C** 1 Circuit	**UNV** Universal Voltage (120V through 277V)	**FA1** Suspension Kit, 51"
30K 3000K	*to*	**D00** 1% Dim-to-Off, 0-10V		**347** 347 Volt [3, 9]	**FA2** Suspension Kit, 87"
35K 3500K	**D125** 1250 (max)	**D05** SpectraSync 5% Dimming, 0-10V [8]			**FA3** Suspension Kit, 219"
40K 4000K		**DS1** 1% Dimming w/ Soft Start, 0-10V			**FA4** Suspension Kit, 363"
50K 5000K [3]		**DS0** 1% Dim-to-Off w/ Soft Start, 0-10V			
27K9 2700K, 90 CRI [3]		**LEC** Hi-lume 1% Ecosystem LED Driver			
30K9 3000K, 90 CRI		**DALI** DALI [3]			
35K9 3500K, 90 CRI		**DALIP** Powered by DALI (2.0) [3]			
40K9 4000K, 90 CRI		**NDM** Non-Dimming			
50K9 5000K, 90 CRI [3]					
2230TD 2200K-3000K SpectraSync™ Dim-to-Warm [5]					
2750T 2700K-5000K SpectraSync™ Tunable White [5]					
2765T 2700K-6500K SpectraSync™ Tunable White [5]					

OPTIONAL

Nightlight	Emergency	Thru-wiring	Patterns [3, 13]	T-Bar Clips [14]
NL Nightlight Circuit Required. Enter quantity. 2NL = 2 nightlight circuits/row	**EF** 10W Emergency Battery Pack. Enter quantity. 2EF = 2 emergency batteries/row. [11]	**W1** No Thru Wire	**C90L** Illuminated 90° Corner	**CB1** T-bar clip - 15/16"
		W2 Provide Normal and Emergency/ Nightlight Thru Wiring [12]	**C120L** Illuminated 120° Corner	**CB2** T-bar clip - 9/16"
		W3 Provide Normal Thru Wiring Only	**C135L** Illuminated 135° Corner	**CB3** T-bar clip - 9/16" SS

Control Options [3]

NX Standalone

NXS NX, PIR BT Occupancy/Daylight Sensor, Slide Mount [15, 16, 17]

NX Networked – Wired

NXE NX, Dual SmartPORTs [15, 16]

NXES NX, PIR BT Occupancy/Daylight Sensor, Slide Mount, Dual SmartPORTs [15, 16]

NX Networked – Wireless

NXSW NX Wireless, PIR BT Occupancy/Daylight Sensor [15, 16, 17]

NXWE NX Wireless Wireless Enabled [15, 16]

NX Networked – Wired/Wireless

NXSWD NX Wireless, PIR BT Occupancy/Daylight Sensor, Dual SmartPORTs [15, 16, 17]

NXWD NX Wireless, Dual SmartPORTs [15, 16]

Sensors

SD1 Daylight Sensor Required. Enter quantity. 2SD1 = 2 daylight sensors/row

SO1 Occupancy Sensor Required. Enter quantity. 2SO1 = 2 occupancy sensors/row

Notes:

1 Not Available with Patterns.
2 Must be ordered with AD.
3 Additional lead time may be applicable. Contact factory.
4 Visit www.litecontrol.com/finishes for details.
5 Must be ordered with D05 Driver option; excludes 2' lengths and patterns.
6 Specifiable in 50 lumen increments. Reference the Performance Data Table for full performance offering and exceptions.
7 D030 not available in 2'
8 Must be ordered with 2230TD, 2750T or 2765T Option
9 Excludes Emergency Battery Pack 'EF' Option. Excludes DALI, DALIP and Lutron (LEC) Dimming Drivers
10 Add suffix /V to replace all 2" non-feed canopy covers with 5" canopy covers. FA1/V = 51" suspension kit w/ 5" canopies; canopies and feed cord are supplied in white regardless of fixture color unless otherwise specified.
11 EF - 10W battery powered driver. Provides a minimum of 90 minutes of emergency lighting. Inverter-Compatible. Provided by others.
12 Only applicable when specified with Emergency/Nightlight.
13 Contact Factory for pattern configurations. Approval drawings required.
14 Includes Luminaire Canopy Box.

NX In-Fixture Control Options:

15 Not available for row mounting. Only available with 0-10V Driver options. Contact factory for Length restrictions.
16 Refer to NX Integrated Controls Reference Table for Functionality of Options.
17 NX Sensors with Bluetooth, BLE, provides remote commission only.

© 2021 Litecontrol, a division of Hubbell Lighting, Inc. Specifications subject to change without notice.
65 Spring Street Plympton, MA 02367 / Tel 781.294.0100 / Website www.litecontrol.com

HUBBELL Lighting

DATE: | LOCATION:
TYPE: L3/L3E | PROJECT:
CATALOG #:

4L-P-D

MOD™ 3 LED PENDANT DIRECT

CONTROLS

NX DISTRIBUTED™ INTELLIGENCE

NX Distributed Intelligence™ Lighting Controls:

Supports both indoor and outdoor applications in a variety of deployment options- wired, wireless, hybrid.
Integrates with and enables a wide array of luminaires including those with SpectraSync Color Tuning Technology.

NX INTEGRATED CONTROLS REFERENCE								
NX Option	Sensor	Networkable	Scheduling	Occupancy	Daylight Harvesting	0–10V Dimming	On/off Control	Bluetooth® App Programming
NX Standalone								
NXS	NXSMP-SMI	No	Yes	Yes	Yes	Yes	Yes	Yes
NX Networked – Wired								
NXE	N/A	Yes	Yes	No	No	Yes	Yes	Requires NXBTC/R [1]
NXES	NXSMP-SMI	Yes	Yes	Yes	Yes	Yes	Yes	Yes
NX Networked – Wireless								
NXSW	NXSMP-SMI	Yes	Yes	Yes	Yes	Yes	Yes	Yes
NXWE [2]	N/A	Yes	Yes	No	No	Yes	Yes	No[3]
NX Networked – Wired/Wireless								
NXSWD	NXSMP-SMI	Yes	Yes	Yes	Yes	Yes	Yes	Yes
NXWD	N/A	Yes	Yes	No	No	Yes	Yes	Requires NXBTC/R [1,3]

1 NXBTC/R needs to be plugged into an available NX SmartPort™ on the fixture network
2 Programming via App requires factory assistance
3 To program NXWE option, need to consult factory. If connected to an area controller, programming can be done from that

SpectraSync™ Color Tuning Technology:

Control your space based on the needs of the application, specific activities throughout the day and preferences of the occupants with distinct SpectraSync™ Color Tuning Technologies.

SpectraSync™ Color Tuning Technology

SPECTRASYNC COLOR TUNING TECHNOLOGY		
Mode	Kelvin Range	Description
Dim to Warm	2200K-3000K	Mimics the familiar warming effect that occurs with traditional incandescent sources as they are dimmed
Tunable White	2700K-5000K 2700K-6500K	Offers users the ability to tailor CCT to their personal preference, enhancing task visibility, material and colors or the aesthetics of the space
Scheduled White	2700K-5000K 2700K-6500K	Mimics the rhythm of natural light or follows an alternative user-defined schedule throughout the day, enhancing an occupant's mood and well-being

SpectraSync Tunable White

Available in two options: 2750T (2700K–5000K) or 2765T (2700K–6500K).
Requires two 0–10V controllers, one for intensity and one for CCT.
Minimum 5% dimming.

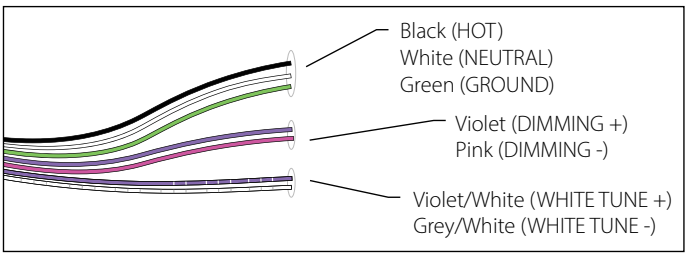

SpectraSync Tunable White luminaires are provided with two 0–10V circuits. The violet and pink circuit is for wiring to any qualified 0–10V controller for dimming. The violet/white and grey/white circuit is for wiring to any qualified 0–10V controller for Tunable White CCT control.

Controller Manufacturer Data

SpectraSync Tunable White was designed to be used with sinking style dimmers (provided by others) and is compatible with:

- Hubbell Control Solutions (HCS): NX Distributed Intelligence™ Room Controllers (NXRC) and In-fixture Controllers (NXFM)
- Lutron: DVTV, DVSTV, and NFTV dimmers
- Wattstopper: ADF120277 and CD4BL (Titan) dimmers

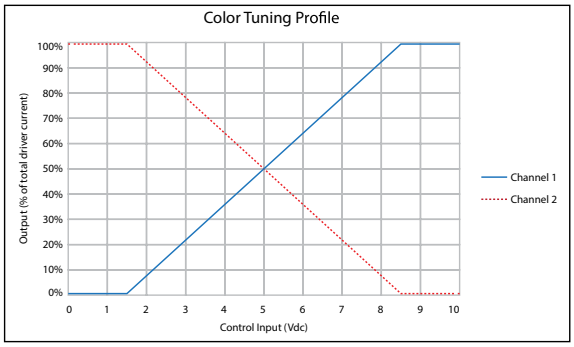

NX Design & Application Guide
NX Brochure
SpectraSync
NX Solutions Guide

© 2021 Litecontrol, a division of Hubbell Lighting, Inc. Specifications subject to change without notice.
65 Spring Street Plympton, MA 02367 / Tel 781.294.0100 / Website www.litecontrol.com

DATE: LOCATION:
TYPE: L3/L3E PROJECT:
CATALOG #:

4L-P-D

MOD™ 3 LED PENDANT DIRECT

PERFORMANCE DATA TABLE

The table below shows the delivered lumens for the various lumen outputs. Use this chart in connection with the output multiplier capability to deliver any output required.

Nomenclature	Lumens/Ft	W/Ft	Efficacy
Downlight			
D030 (min)	300	2.6	118
D035	350	3.0	118
D040	400	3.4	118
D045	450	3.8	118
D050	500	4.2	118
D055	550	4.7	117
D060	600	5.1	117
D065	650	5.6	116
D070	700	6.1	116
D075	750	6.5	115
D080	800	7.0	115
D085	850	7.5	113
D090	900	7.9	113
D095	950	8.5	112
D100	1000	9.0	112
D105	1050	9.4	111
D110 (max)	1100	10.0	110

(wattage may vary up to 5% from published)

Output Restrictions

Driver options listed below are not available for the output and length as shown.

Restrictions - Direct		Output LPA						
		300	350	400	450	500	950	1000
Length (feet)	2	LEC, DALI, 347V	LEC, DALI, 347V	DALI, 347V	DALI, 347V	DALI, 347V	LEC	LEC
	3	DALI, 347V	DALI, 347V				LEC	LEC
	4						LEC	LEC
	5						LEC	LEC
	6						LEC	LEC
	8						LEC	LEC

Output Multiplier Table

Photometrics for the 4L are published here at a nominal 3500K temperature. This table may be used to approximate the lumen values at different Kelvin temperatures. Power consumption would stay the same.

Option	2700K	3000K	3500K	4000K	5000K	2700K 90 CRI	3000K 90 CRI	3500K 90 CRI	4000K 90 CRI	5000K 90 CRI
SOF	0.95	0.98	1.00	1.03	1.05	0.83	0.85	0.88	0.90	0.93
REG	0.73	0.75	0.77	0.79	0.81	0.64	0.65	0.68	0.69	0.72
BWO	0.67	0.69	0.70	0.72	0.76	0.63	0.53	0.47	0.42	0.39
ASYM	0.95	0.98	1.00	1.03	1.05	0.83	0.85	0.88	0.90	0.93
BAT	0.95	0.98	1.00	1.03	1.05	0.83	0.85	0.88	0.90	0.93
DRP	0.95	0.98	1.00	1.03	1.05	0.83	0.85	0.88	0.90	0.93
LPAD	0.86	0.88	0.90	0.93	0.95	0.75	0.77	0.79	0.81	0.84

© 2021 Litecontrol, a division of Hubbell Lighting, Inc. Specifications subject to change without notice.
65 Spring Street Plympton, MA 02367 / Tel 781.294.0100 / Website www.litecontrol.com

LITECONTROL
making light work™

DATE:	LOCATION:
TYPE: L3/L3E	PROJECT:
CATALOG #:	

4L-P-D

MOD™ 3 LED PENDANT DIRECT

DIMENSIONS

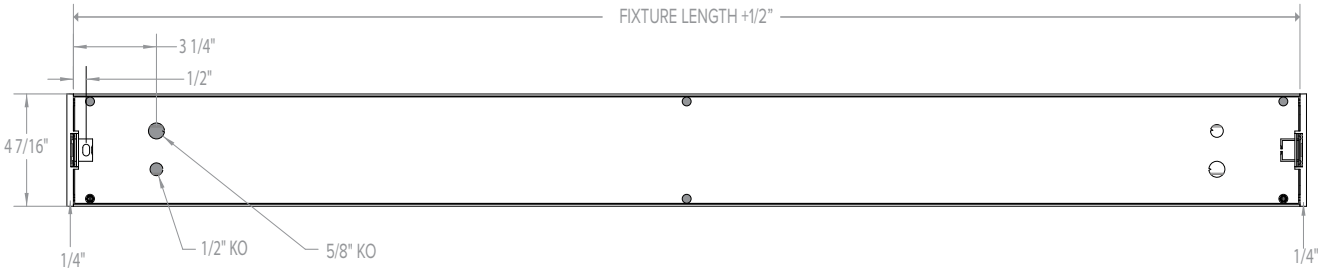

INDIVIDUAL MOUNTING

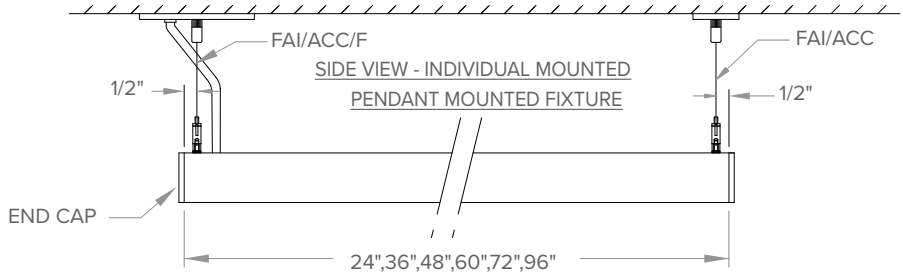

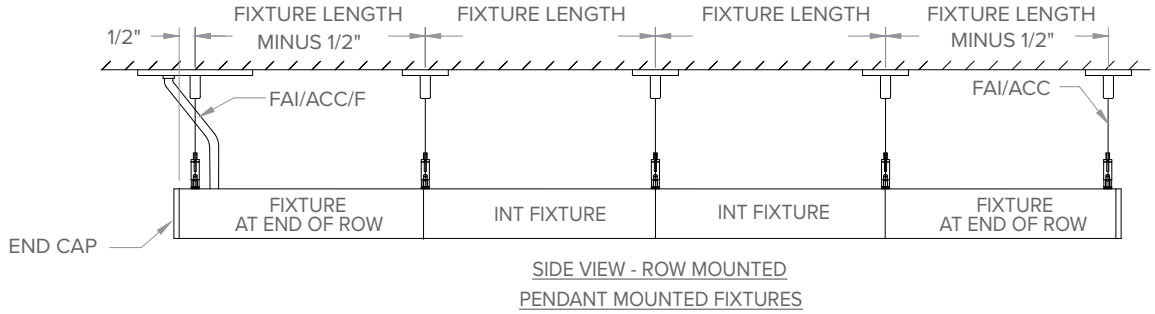

ROW MOUNTING

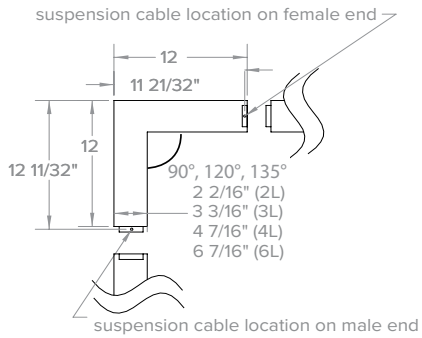

PATTERNS

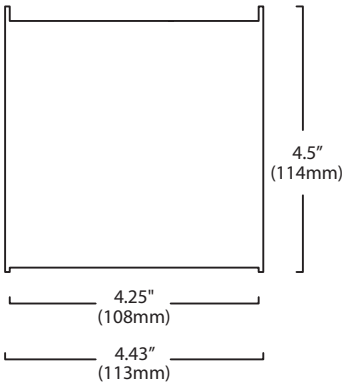

END CAP VIEW

© 2021 Litecontrol, a division of Hubbell Lighting, Inc. Specifications subject to change without notice.
65 Spring Street Plympton, MA 02367 / Tel 781.294.0100 / Website www.litecontrol.com

HUBBELL Lighting

LITECONTROL
making light work™

DATE:	LOCATION:
TYPE: L4/L4E	PROJECT:
CATALOG #:	

4L-P-D

MOD™ 3 LED PENDANT DIRECT

MODX

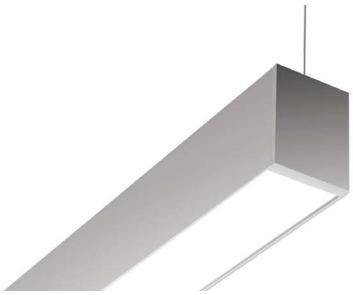

FEATURES

- Variable Intensity technology provides a range of specifiable outputs and resulting fixture wattages
- 2 SDCM color consistency
- End cap design eliminates visible diffuser seams/gaps

See Certification Specifications

CONTROLS

NX DISTRIBUTED INTELLIGENCE™ SpectraSync™

RELATED PRODUCTS

2L-P-D 3L-P-D 6L-P-D

SERVICE PROGRAMS

QS

SPECIFICATIONS

CONSTRUCTION

- Housing constructed from extruded aluminum
- End caps constructed from die cast aluminum with magnetic interface
- End caps overlap diffuser at each fixture end to elimate gaps and LED visibility

OPTICAL PERFORMANCE

- 2 SDCM color consistency, 80 or 90 CRI
- SOF: Soft diffuse acrylic lens
- REG: ½" regressed softglo lens with painted steel inserts. Output multiplier (.77)
- BWO: White blade baffle with softglo lens overlay. Output multiplier (.70)
- ASYM: Asymmetric Highly transmissive diffuse acrylic lens with linear prisms
- BAT: "Batwing" distribution created created from highly transmissive diffuse acrylic lens with linear prisms
- DRP: 1/2" protruding soft diffuse "drop" lens

INSTALLATION

- Suspension required at every row joint. 3/64" diameter field-adjustable aircraft cables, ships separately
- Low profile cable gripper limits visibility while providing maximum horizontal balance adjustment
- Pendant locations at ends of rows (or individual fixtures) are 1/2" from fixture ends
- Pendant attachment allows for horizontal adjustment to "fine-tune" side-to-side leveling
- Illuminated corners available in 90°, 120°, 135°. One piece construction, ready to install, with diffusers that match adjoining fixtures. Corner system connectors must be used to form patterns. The length of each outside or inside illuminated corner is 12"

INSTALLATION (CONTINUED)

- Square and Triangle non-illuminated connectors match fixture width for continuous look
- Fixture weight: 3lbs/ft

ELECTRICAL

- Variable Intensity (VI) technology allows precise specification of fixture output/ wattage. Fixture will be programmed and labeled to specification. Indirect and direct hemispheres can be independently specified
- LED boards and drivers can be accessed and removed from fixture, while installed
- Entire LED module can be removed and replaced
- 1C (1 Circuit) Fixture wired for a single circuit
- Non-feed: 2" diameter canopy covers provided (unless 5" non-feed cover is specified)
- Feed Cord: 4-wire, 7 amps max; 5-wire, 5 amps max
- Emergency Battery: 10W battery powered driver. Provides a minimum of 90 minutes of emergency lighting. Inverter-Compatible. Provided by others. Available in 4'+' fixtures

CONTROLS

- Sensors install between diffusers
- NX Distributed Intelligence™: Supports indoor and outdoor applications, wired, wireless and hybrid networked NX lighting control deployments and enabled emerging applications, such as Hubbell Lighting's SpectraSync™ Color Tuning Technology
- SpectraSync™ Color Tuning Technology: Control your space based on the needs of the application, specific activities throughout the day and preferences of the occupants

CERTIFICATIONS

- DLC® (DesignLights Consortium) Qualified - see www.designlights.org
- CSA listed for damp location
- IBEW
- AF of L
- UL924
- This product qualifies as a "designated country construction material" per FAR 52.225-11 Buy American-Construction. Materials under Trade Agreements effective 8/14/2020. See Buy American Solutions. Contact factory for configurations including SpectraSync, NX, or sensors.

WARRANTY

- LED boards - 5 years
- LED drivers (standard) - 5 years
- LED drivers (Lutron) - 3 years
- See www.litecontrol.com for details

KEY DATA	
Lumen Range Per Foot	D: 300 - 1100
Wattage Range Per Foot	2.6-10.0
Efficacy Range (LPW)	110-118
Rated Life (Hours)	L70: >61,000 L90: >61,000

© 2021 Litecontrol a division of Hubbell Lighting, Inc. Specifications subject to change without notice.
65 Spring Street Plympton, MA 02367 / Tel 781.294.0100 / Website www.litecontrol.com

HUBBELL Lighting

LITECONTROL
making light work™

4L-P-D

MOD™ 3 LED PENDANT DIRECT

DATE: | LOCATION:

TYPE: L4/L4E | PROJECT:

CATALOG #:

= Service Program

QS 10

Click icon for a list of Quick-Ship options

ORDERING GUIDE

Example: 4L-P-D-8-08-SOF-C1-27K-D030-D01-1C-UNV-FA1

CATALOG # 4L-P-D-4

4L	P	D	4	04	SOF	C1
Series	**Mounting**	**Fixture Distribution**	**Row Length (In Feet)**	**Max Length In Row**	**Direct Optical Distribution**	**Finish/Color [4]**
4L MOD	**P** Pendant	**D** Direct	**__'** Enter in foot increments	**02** 2', 609mm	**SOF** Soft Diffuse Lens, Lambertian	**C1** Matte White (Default)
		AD Asymmetric Direct		**03** 3', 914mm	**REG** Regressed Diffuse Lens [1]	**C2** Textured Matte White
				04 4', 1219mm	**BWO** Blade Baffle with Overlay [1]	**C3** Light Silver
				05 5', 1524mm	**ASYM** Asymmetric Diffuse Lens [1, 2]	**C4** Machined Aluminum
				06 6', 1829mm	**BAT** Batwing Lens	**C5** Carbon Black
				08 8', 2438mm	**DRP** Drop Lens [1, 3]	**C6** Textured Camera Black
						CC Custom Color

2750T	375 LM	D01		UNV	
Color Temperature	**Direct Output/ft [6]**	**Driver**	**Circuiting**	**Voltage**	**Suspension Kit [10]**
27K 2700K [3]	**D030** 300 (min) [7]	**D01** 1% Dimming, 0-10V	**1C** 1 Circuit	**UNV** Universal Voltage (120V through 277V)	**FA1** Suspension Kit, 51"
30K 3000K	*to*	**D00** 1% Dim-to-Off, 0-10V		**347** 347 Volt [3, 9]	**FA2** Suspension Kit, 87"
35K 3500K	**D125** 1250 (max)	**D05** SpectraSync 5% Dimming, 0-10V [8]			**FA3** Suspension Kit, 219"
40K 4000K		**DS1** 1% Dimming w/ Soft Start, 0-10V			**FA4** Suspension Kit, 363"
50K 5000K [3]		**DS0** 1% Dim-to-Off w/ Soft Start, 0-10V			
27K9 2700K, 90 CRI [3]		**LEC** Hi-lume 1% Ecosystem LED Driver			
30K9 3000K, 90 CRI		**DALI** DALI [3]			
35K9 3500K, 90 CRI		**DALIP** Powered by DALI (2.0) [3]			
40K9 4000K, 90 CRI		**NDM** Non-Dimming			
50K9 5000K, 90 CRI [3]					
2230TD 2200K-3000K SpectraSync™ Dim-to-Warm [5]					
2750T 2700K-5000K SpectraSync™ Tunable White [5]					
2765T 2700K-6500K SpectraSync™ Tunable White [5]					

OPTIONAL

Nightlight	Emergency	Thru-wiring	Patterns [3, 13]	T-Bar Clips [14]
NL Nightlight Circuit Required. Enter quantity. 2NL = 2 nightlight circuits/row	**EF** 10W Emergency Battery Pack. Enter quantity. 2EF = 2 emergency batteries/row. [11]	**W1** No Thru Wire	**C90L** Illuminated 90° Corner	**CB1** T-bar clip - 15/16"
		W2 Provide Normal and Emergency/ Nightlight Thru Wiring [12]	**C120L** Illuminated 120° Corner	**CB2** T-bar clip - 9/16"
		W3 Provide Normal Thru Wiring Only	**C135L** Illuminated 135° Corner	**CB3** T-bar clip - 9/16" SS

Control Options [3]

NX Standalone

NXS NX, PIR BT Occupancy/Daylight Sensor, Slide Mount [15, 16, 17]

NX Networked – Wired

NXE NX, Dual SmartPORTs [15, 16]

NXES NX, PIR BT Occupancy/Daylight Sensor, Slide Mount, Dual SmartPORTs [15, 16]

NX Networked – Wireless

NXSW NX Wireless, PIR BT Occupancy/Daylight Sensor [15, 16, 17]

NXWE NX Wireless Wireless Enabled [15, 16]

NX Networked – Wired/Wireless

NXSWD NX Wireless, PIR BT Occupancy/Daylight Sensor, Dual SmartPORTs [15, 16, 17]

NXWD NX Wireless, Dual SmartPORTs [15, 16]

Sensors

SD1 Daylight Sensor Required. Enter quantity. 2SD1 = 2 daylight sensors/row

SO1 Occupancy Sensor Required. Enter quantity. 2SO1 = 2 occupancy sensors/row

Notes:

1 Not Available with Patterns.
2 Must be ordered with AD.
3 Additional lead time may be applicable. Contact factory.
4 Visit www.litecontrol.com/finishes for details.
5 Must be ordered with D05 Driver option; excludes 2' lengths and patterns.
6 Specifiable in 50 lumen increments. Reference the Performance Data Table for full performance offering and exceptions.
7 D030 not available in 2'
8 Must be ordered with 2230TD, 2750T or 2765T Option
9 Excludes Emergency Battery Pack 'EF' Option. Excludes DALI, DALIP and Lutron (LEC) Dimming Drivers
10 Add suffix /V to replace all 2" non-feed canopy covers with 5" canopy covers. FA1/V = 51" suspension kit w/ 5" canopies; canopies and feed cord are supplied in white regardless of fixture color unless otherwise specified.
11 EF - 10W battery powered driver. Provides a minimum of 90 minutes of emergency lighting. Inverter-Compatible. Provided by others.
12 Only applicable when specified with Emergency/Nightlight.
13 Contact Factory for pattern configurations. Approval drawings required.
14 Includes Luminaire Canopy Box.

NX In-Fixture Control Options:

15 Not available for row mounting. Only available with 0-10V Driver options. Contact factory for Length restrictions.
16 Refer to NX Integrated Controls Reference Table for Functionality of Options.
17 NX Sensors with Bluetooth, BLE, provides remote commission only.

© 2021 Litecontrol, a division of Hubbell Lighting, Inc. Specifications subject to change without notice.
65 Spring Street Plympton, MA 02367 / Tel 781.294.0100 / Website www.litecontrol.com

HUBBELL Lighting

DATE: | LOCATION:
TYPE: L4/L4E | PROJECT:
CATALOG #:

4L-P-D

MOD™ 3 LED PENDANT DIRECT

CONTROLS

NX DISTRIBUTED™ INTELLIGENCE

NX Distributed Intelligence™ Lighting Controls:

Supports both indoor and outdoor applications in a variety of deployment options- wired, wireless, hybrid.
Integrates with and enables a wide array of luminaires including those with SpectraSync Color Tuning Technology.

NX INTEGRATED CONTROLS REFERENCE								
NX Option	Sensor	Networkable	Scheduling	Occupancy	Daylight Harvesting	0–10V Dimming	On/off Control	Bluetooth® App Programming
NX Standalone								
NXS	NXSMP-SMI	No	Yes	Yes	Yes	Yes	Yes	Yes
NX Networked – Wired								
NXE	N/A	Yes	Yes	No	No	Yes	Yes	Requires NXBTC/R [1]
NXES	NXSMP-SMI	Yes	Yes	Yes	Yes	Yes	Yes	Yes
NX Networked – Wireless								
NXSW	NXSMP-SMI	Yes	Yes	Yes	Yes	Yes	Yes	Yes
NXWE [2]	N/A	Yes	Yes	No	No	Yes	Yes	No[3]
NX Networked – Wired/Wireless								
NXSWD	NXSMP-SMI	Yes	Yes	Yes	Yes	Yes	Yes	Yes
NXWD	N/A	Yes	Yes	No	No	Yes	Yes	Requires NXBTC/R [1,3]

1 NXBTC/R needs to be plugged into an available NX SmartPort™ on the fixture network
2 Programming via App requires factory assistance
3 To program NXWE option, need to consult factory. If connected to an area controller, programming can be done from that

SpectraSync™ Color Tuning Technology:

Control your space based on the needs of the application, specific activities throughout the day and preferences of the occupants with distinct SpectraSync™ Color Tuning Technologies.

SpectraSync™ Color Tuning Technology

SPECTRASYNC COLOR TUNING TECHNOLOGY		
Mode	Kelvin Range	Description
Dim to Warm	2200K-3000K	Mimics the familiar warming effect that occurs with traditional incandescent sources as they are dimmed
Tunable White	2700K-5000K 2700K-6500K	Offers users the ability to tailor CCT to their personal preference, enhancing task visibility, material and colors or the aesthetics of the space
Scheduled White	2700K-5000K 2700K-6500K	Mimics the rhythm of natural light or follows an alternative user-defined schedule throughout the day, enhancing an occupant's mood and well-being

SpectraSync Tunable White

Available in two options: 2750T (2700K–5000K) or 2765T (2700K–6500K).
Requires two 0–10V controllers, one for intensity and one for CCT.
Minimum 5% dimming.

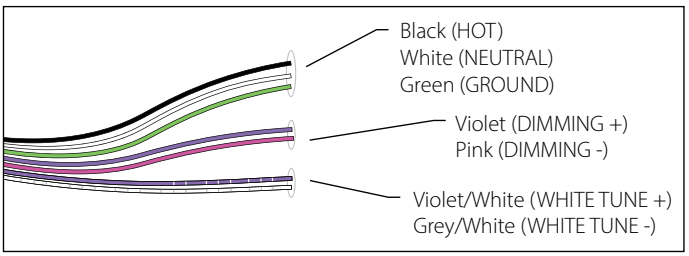

SpectraSync Tunable White luminaires are provided with two 0–10V circuits. The violet and pink circuit is for wiring to any qualified 0–10V controller for dimming. The violet/white and grey/white circuit is for wiring to any qualified 0–10V controller for Tunable White CCT control.

Controller Manufacturer Data

SpectraSync Tunable White was designed to be used with sinking style dimmers (provided by others) and is compatible with:

- Hubbell Control Solutions (HCS): NX Distributed Intelligence™ Room Controllers (NXRC) and In-fixture Controllers (NXFM)
- Lutron: DVTV, DVSTV, and NFTV dimmers
- Wattstopper: ADF120277 and CD4BL (Titan) dimmers

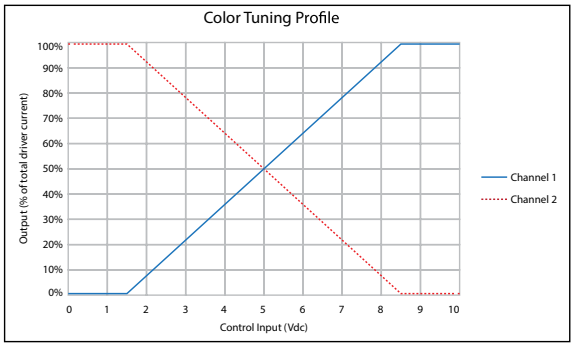

NX Design & Application Guide
NX Brochure
SpectraSync
NX Solutions Guide

© 2021 Litecontrol, a division of Hubbell Lighting, Inc. Specifications subject to change without notice.
65 Spring Street Plympton, MA 02367 / Tel 781.294.0100 / Website www.litecontrol.com

DATE: LOCATION:
TYPE: L4/L4E PROJECT:
CATALOG #:

4L-P-D

MOD™ 3 LED PENDANT DIRECT

PERFORMANCE DATA TABLE

The table below shows the delivered lumens for the various lumen outputs. Use this chart in connection with the output multiplier capability to deliver any output required.

Nomenclature	Lumens/Ft	W/Ft	Efficacy
Downlight			
D030 (min)	300	2.6	118
D035	350	3.0	118
D040	400	3.4	118
D045	450	3.8	118
D050	500	4.2	118
D055	550	4.7	117
D060	600	5.1	117
D065	650	5.6	116
D070	700	6.1	116
D075	750	6.5	115
D080	800	7.0	115
D085	850	7.5	113
D090	900	7.9	113
D095	950	8.5	112
D100	1000	9.0	112
D105	1050	9.4	111
D110 (max)	1100	10.0	110

(wattage may vary up to 5% from published)

Output Restrictions

Driver options listed below are not available for the output and length as shown.

Restrictions - Direct		Output LPA						
		300	350	400	450	500	950	1000
Length (feet)	2	LEC, DALI, 347V	LEC, DALI, 347V	DALI, 347V	DALI, 347V	DALI, 347V	LEC	LEC
	3	DALI, 347V	DALI, 347V				LEC	LEC
	4						LEC	LEC
	5						LEC	LEC
	6						LEC	LEC
	8						LEC	LEC

Output Multiplier Table

Photometrics for the 4L are published here at a nominal 3500K temperature. This table may be used to approximate the lumen values at different Kelvin temperatures. Power consumption would stay the same.

Option	2700K	3000K	3500K	4000K	5000K	2700K 90 CRI	3000K 90 CRI	3500K 90 CRI	4000K 90 CRI	5000K 90 CRI
SOF	0.95	0.98	1.00	1.03	1.05	0.83	0.85	0.88	0.90	0.93
REG	0.73	0.75	0.77	0.79	0.81	0.64	0.65	0.68	0.69	0.72
BWO	0.67	0.69	0.70	0.72	0.76	0.63	0.53	0.47	0.42	0.39
ASYM	0.95	0.98	1.00	1.03	1.05	0.83	0.85	0.88	0.90	0.93
BAT	0.95	0.98	1.00	1.03	1.05	0.83	0.85	0.88	0.90	0.93
DRP	0.95	0.98	1.00	1.03	1.05	0.83	0.85	0.88	0.90	0.93
LPAD	0.86	0.88	0.90	0.93	0.95	0.75	0.77	0.79	0.81	0.84

© 2021 Litecontrol, a division of Hubbell Lighting, Inc. Specifications subject to change without notice.
65 Spring Street Plympton, MA 02367 / Tel 781.294.0100 / Website www.litecontrol.com

LITECONTROL
making light work™

DATE:	LOCATION:
TYPE: L4/L4E	PROJECT:
CATALOG #:	

4L-P-D

MOD™ 3 LED PENDANT DIRECT

DIMENSIONS

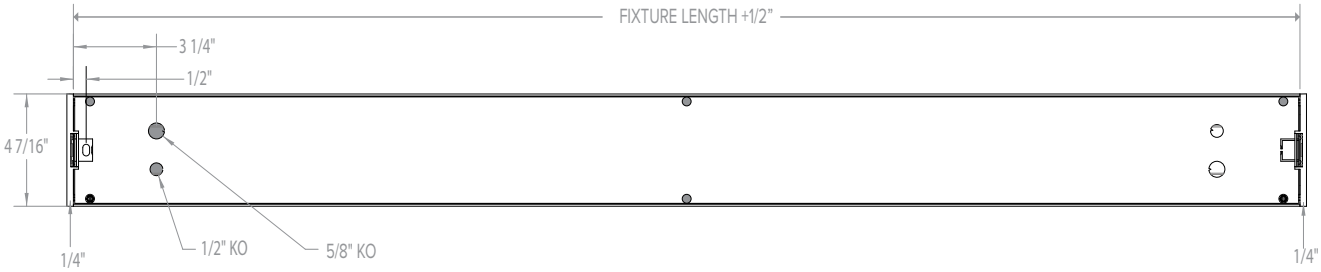

INDIVIDUAL MOUNTING

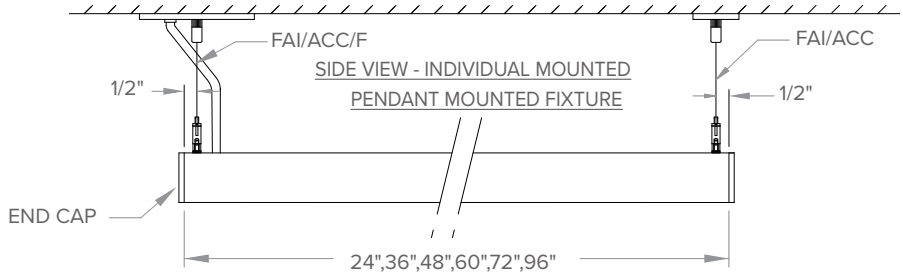

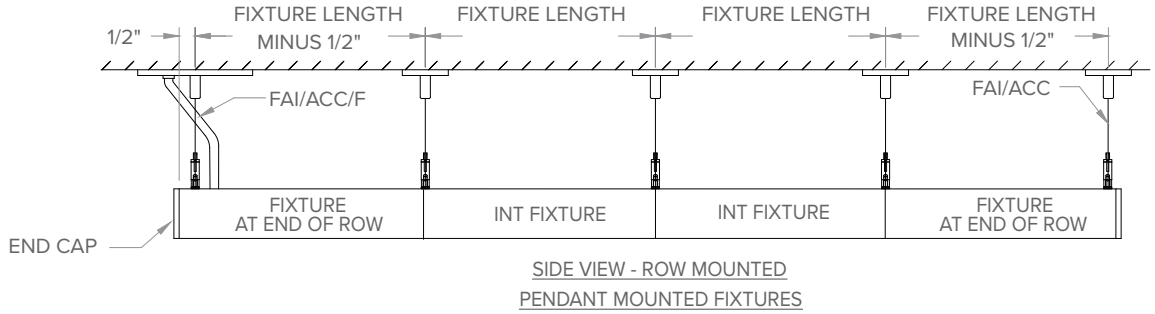

ROW MOUNTING

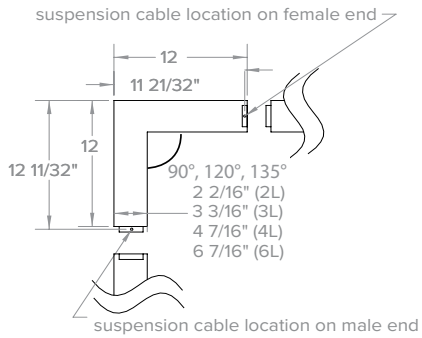

PATTERNS

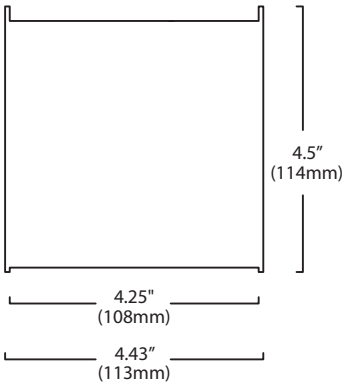

END CAP VIEW

© 2021 Litecontrol, a division of Hubbell Lighting, Inc. Specifications subject to change without notice.
65 Spring Street Plympton, MA 02367 / Tel 781.294.0100 / Website www.litecontrol.com

HUBBELL Lighting

LITECONTROL
making light work™

DATE:	LOCATION:
TYPE: L4R	PROJECT:
CATALOG #:	

4L-R-D

MOD™ 4 LED RECESSED DIRECT

MODX

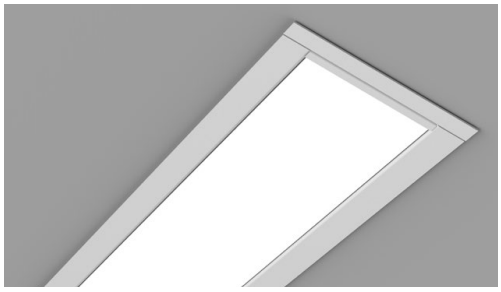

FEATURES

- Variable Intensity technology provides a range of specifiable outputs and resulting fixture wattages
- 2 SDCM color consistency
- End cap design eliminates visible diffuser seams/gaps

See Certification Specifications

CONTROLS

NX DISTRIBUTED INTELLIGENCE™ SpectraSync™

RELATED PRODUCTS

2L-R-D 3L-R-D 6L-R-D

SERVICE PROGRAMS

QS

PHOTOMETRY
DIMENSIONAL DRAWINGS
4L-R-D QUICK-SHIP

SPECIFICATIONS

CONSTRUCTION

- Housing contructed from die-formed and welded steel with wiring knockouts in top
- End caps constructed from die-formed steel. Installs from below via magnetic interface
- End caps overlap diffuser at each fixture end to elimate gaps and LED visibility

OPTICAL PERFORMANCE

- 2 SDCM color consistency, 80 or 90 CRI
- SOF: Soft diffuse acrylic lens
- REG: ½" regressed softglo lens with painted steel inserts. Output multiplier (.77)
- BWO: White blade baffle with softglo lens overlay. Output multiplier (.70)
- ASYM: Asymmetric Highly transmissive diffuse acrylic lens with linear prisms
- BAT: "Batwing" distribution created created from highly transmissive diffuse acrylic lens with linear prisms
- DRP: 1/2" protruding soft diffuse "drop" lens

INSTALLATION

- PT Mounting: Continuous spackle trim with beaded edge welded to housing. Spackle trim allows plaster coat up to fixture edge for clean ceiling appearance
- LG/NG/SS Mounting: Side rails provide continuous mounting, lateral spacing between T-bars and allows clearance for T-bar supporting wire. For Tegular grid mount, fixture will sit level with the T-bar
- DW Mounting: Side rails allow installation into drywall slot. Visible flange is located on all 4 sides of fixture

INSTALLATION (CONTINUED)

- Illuminated corners available in 90°, 120°, 135°. One piece construction, ready to install, with diffusers that match adjoining fixtures. Corner system connectors must be used to form patterns. The length of each outside or inside illuminated corner is 12"
- Fixture weight: 3lbs/ft

ELECTRICAL

- Variable Intensity (VI) technology allows precise specification of fixture output/ wattage. Fixture will be programmed and labeled to specification. Indirect and direct hemispheres can be independently specified
- LED boards and drivers can be accessed and removed from fixture, while installed
- Entire LED module can be removed and replaced
- 1C (1 Circuit) Fixture wired for a single circuit
- Emergency Battery: 10W battery powered driver. Provides a minimum of 90 minutes of emergency lighting. Inverter-Compatible. Provided by others. Available in 4'+' fixtures

CONTROLS

- Sensors install between diffusers
- NX Distributed Intelligence™: Supports indoor and outdoor applications, wired, wireless and hybrid networked NX lighting control deployments and enabled emerging applications, such as Hubbell Lighting's SpectraSync™ Color Tuning Technology
- SpectraSync™ Color Tuning Technology: Control your space based on the needs of the application, specific activities throughout the day and preferences of the occupants

CERTIFICATIONS

- DLC® (DesignLights Consortium) Qualified - see www.designlights.org
- CSA listed for damp location
- IBEW
- AF of L
- UL924
- This product qualifies as a "designated country construction material" per FAR 52.225-11 Buy American-Construction. Materials under Trade Agreements effective 8/14/2020. See Buy American Solutions. Contact factory for configurations including SpectraSync, NX, or sensors.

WARRANTY

- LED boards - 5 years
- LED drivers (standard) - 5 years
- LED drivers (Lutron) - 3 years
- See www.litecontrol.com for details

KEY DATA	
Lumen Range Per Foot	D: 300–1100
Wattage Range Per Foot	2.6–10.0
Efficacy Range (LPW)	110–118
Rated Life (Hours)	L70: >61,000 L90: >61,000

© 2021 Litecontrol a division of Hubbell Lighting, Inc. Specifications subject to change without notice.
65 Spring Street Plympton, MA 02367 / Tel 781.294.0100 / Website www.litecontrol.com

HUBBELL Lighting

LITECONTROL
making light work™

4L-R-D

MOD™ 4 LED RECESSED DIRECT

DATE: | LOCATION:

TYPE: L4R | PROJECT:

CATALOG #:

= Service Program

QS 10

Click icon for a list of Quick-Ship options

ORDERING GUIDE

Example: 4L-DW-D-8-.3-08-SOF-C1-27K-D030-D01-1C-UNV

CATALOG # 4L-R-D-4

4L	GRID	D	4		04	SOF
Series	**Ceiling Type** [1]	**Fixture Distribution**	**Row Length (In Feet)**	**Row Length Adder** [2]	**Max Length in Row**	**Direct Optical Distribution**
4L MOD	**DW** Drywall	**D** Direct	**__'** Enter in foot increments	**.3** Row length +3"	**02** 2', 609 mm	**SOF** Soft Diffuse Lens, Lambertian
	PT Drywall with plaster trim (trimless finish)	**AD** Asymmetric Direct		**.6** Row length +6"	**03** 3', 914 mm	**REG** Regressed Diffuse Lens [3]
	LG 15/16 Grid			**.9** Row length +9"	**04** 4', 1219 mm	**BWO** Blade Baffle with Overlay [3]
	NG 9/16 Grid			Measured in inches	**05** 5', 1524 mm	**ASYM** Asymmetric Diffuse Lens [3, 4]
	SS 9/16 Screw Slot				**06** 6', 1829 mm	**BAT** Batwing Lens
					08 8', 2438 mm	**DRP** Drop Lens [3, 5]

C1	2750T	625 LM	D01		UNV
Finish/Color [6]	**Color Temperature**	**Direct Output/ft** [8]	**Driver**	**Circuiting**	**Voltage**
C1 Matte White (Default)	**27K** 2700K [5]	**D030** 300 (min) [9]	**D01** 1% Dimming, 0-10V	**1C** 1 Circuit	**UNV** Universal Voltage (120V through 277V)
C2 Textured Matte White	**30K** 3000K	*to*	**D00** 1% Dim-to-Off, 0-10V		**347** 347 Volt [5, 11]
C3 Light Silver	**35K** 3500K	**D125** 1250 (max)	**D05** SpectraSync 5% Dimming, 0-10V [10]		
C4 Machined Aluminum	**40K** 4000K		**DS1** 1% Dimming w/ Soft Start, 0-10V		
C5 Carbon Black	**50K** 5000K [5]		**DS0** 1% Dim-to-Off w/ Soft Start, 0-10V		
C6 Textured Camera Black	**27K9** 2700K, 90 CRI [5]		**LEC** Hi-lume 1% Ecosystem LED Driver		
CC Custom Color	**30K9** 3000K, 90 CRI		**DALI** DALI [5]		
	35K9 3500K, 90 CRI		**DALIP** Powered by DALI (2.0) [5]		
	40K9 4000K, 90 CRI		**NDM** Non-Dimming		
	50K9 5000K, 90 CRI [5]				
	2230TD 2200K-3000K SpectraSync™ Dim-to-Warm [7]				
	2750T 2700K-5000K SpectraSync™ Tunable White [7]				
	2765T 2700K-6500K SpectraSync™ Tunable White [7]				

OPTIONAL

Nightlight	Emergency	Thru-wiring	Patterns [5, 14]	Chicago Enviromental Air Modification
NL Nightlight Circuit Required. Enter quantity. 2NL = 2 nightlight circuits/row	**EF** 10W Emergency Battery Pack. Enter quantity. 2EF = 2 emergency batteries/row. [12]	**W1** No Thru Wire	**C90L** Illuminated 90° Corner	**CCEA** Chicago Environmental Air Modification
		W2 Provide Normal and Emergency/ Nightlight Thru Wiring [13]	**C120L** Illuminated 120° Corner	
		W3 Provide Normal Thru Wiring Only	**C135L** Illuminated 135° Corner	

Control Options [5]

NX Standalone

NXS NX, PIR BT Occupancy/Daylight Sensor, Slide Mount [15, 16, 17]

NX Networked – Wired

NXE NX, Dual SmartPORTs [15, 16]

NXES NX, PIR BT Occupancy/Daylight Sensor, Slide Mount, Dual SmartPORTs [15, 16]

NX Networked – Wireless

NXSW NX Wireless, PIR BT Occupancy/Daylight Sensor [15, 16, 17]

NXWE NX Wireless Wireless Enabled [15, 16]

NX Networked – Wired/Wireless

NXSWD NX Wireless, PIR BT Occupancy/Daylight Sensor, Dual SmartPORTs [15, 16, 17]

NXWD NX Wireless, Dual SmartPORTs [15, 16]

Sensors

SD1 Daylight Sensor Required. Enter quantity. 2SD1 = 2 daylight sensors/row

SO1 Occupancy Sensor Required. Enter quantity. 2SO1 = 2 occupancy sensors/row

SZ1 Zigbee Radio Module Required. Enter quantity. 2SZ1=2 radio modules/row. Radio controls up to 10 drivers. Must be ordered with D00.

Notes:

1 Ceiling type can not be retrofitted in the field.
2 Excludes individual grid mounts
3 Not Available with Patterns.
4 Must be ordered with AD.
5 Additional lead time may be applicable. Contact factory.
6 Visit www.litecontrol.com/finishes for details.
7 Must be ordered with D05 Driver option; excludes 2' lengths and patterns.
8 Specifiable in 50 lumen increments. Reference the Performance Data Table for full performance offering and exceptions.
9 D030 not available in 2'
10 Must be ordered with 2230TD, 2750T or 2765T Option
11 Excludes Emergency Battery Pack 'EF' Option. Excludes DALI, DALIP and Lutron (LEC) Dimming Drivers
12 EF - 10W battery powered driver. Provides a minimum of 90 minutes of emergency lighting. Inverter-Compatible. Provided by others.
13 Only applicable when specified with Emergency/Nightlight.
14 Contact Factory for pattern configurations. Approval drawings required.

NX In-Fixture Control Options:

15 Not available for row mounting. Only available with 0-10V Driver options. Contact factory for Length restrictions.
16 Refer to NX Integrated Controls Reference Table for Functionality of Options.
17 NX Sensors with Bluetooth, BLE, provides remote commission only.

© 2021 Litecontrol, a division of Hubbell Lighting, Inc. Specifications subject to change without notice.
65 Spring Street Plympton, MA 02367 / Tel 781.294.0100 / Website www.litecontrol.com

HUBBELL Lighting

DATE: | LOCATION:
TYPE: L4R | PROJECT:
CATALOG #:

4L-R-D

MOD™ 4 LED RECESSED DIRECT

CONTROLS

NX DISTRIBUTED™ INTELLIGENCE

NX Distributed Intelligence™ Lighting Controls:

Supports both indoor and outdoor applications in a variety of deployment options- wired, wireless, hybrid.
Integrates with and enables a wide array of luminaires including those with SpectraSync Color Tuning Technology.

NX INTEGRATED CONTROLS REFERENCE								
NX Option	Sensor	Networkable	Scheduling	Occupancy	Daylight Harvesting	0–10V Dimming	On/off Control	Bluetooth® App Programming
NX Standalone								
NXS	NXSMP-SMI	No	Yes	Yes	Yes	Yes	Yes	Yes
NX Networked – Wired								
NXE	N/A	Yes	Yes	No	No	Yes	Yes	Requires NXBTC/R [1]
NXES	NXSMP-SMI	Yes	Yes	Yes	Yes	Yes	Yes	Yes
NX Networked – Wireless								
NXSW	NXSMP-SMI	Yes	Yes	Yes	Yes	Yes	Yes	Yes
NXWE [2]	N/A	Yes	Yes	No	No	Yes	Yes	No[3]
NX Networked – Wired/Wireless								
NXSWD	NXSMP-SMI	Yes	Yes	Yes	Yes	Yes	Yes	Yes
NXWD	N/A	Yes	Yes	No	No	Yes	Yes	Requires NXBTC/R [1,3]

1 NXBTC/R needs to be plugged into an available NX SmartPort™ on the fixture network
2 Programming via App requires factory assistance
3 To program NXWE option, need to consult factory. If connected to an area controller, programming can be done from that

SpectraSync™ Color Tuning Technology:

Control your space based on the needs of the application, specific activities throughout the day and preferences of the occupants with distinct SpectraSync™ Color Tuning Technologies.

SpectraSync™ Color Tuning Technology

SPECTRASYNC COLOR TUNING TECHNOLOGY		
Mode	Kelvin Range	Description
Dim to Warm	2200K-3000K	Mimics the familiar warming effect that occurs with traditional incandescent sources as they are dimmed
Tunable White	2700K-5000K 2700K-6500K	Offers users the ability to tailor CCT to their personal preference, enhancing task visibility, material and colors or the aesthetics of the space
Scheduled White	2700K-5000K 2700K-6500K	Mimics the rhythm of natural light or follows an alternative user-defined schedule throughout the day, enhancing an occupant's mood and well-being

SpectraSync Tunable White

Available in two options: 2750T (2700K–5000K) or 2765T (2700K–6500K).
Requires two 0–10V controllers, one for intensity and one for CCT.
Minimum 5% dimming.

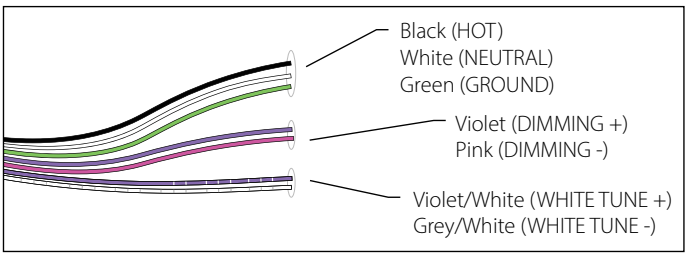

SpectraSync Tunable White luminaires are provided with two 0–10V circuits. The violet and pink circuit is for wiring to any qualified 0–10V controller for dimming. The violet/white and grey/white circuit is for wiring to any qualified 0–10V controller for Tunable White CCT control.

Controller Manufacturer Data

SpectraSync Tunable White was designed to be used with sinking style dimmers (provided by others) and is compatible with:

- Hubbell Control Solutions (HCS): NX Distributed Intelligence™ Room Controllers (NXRC) and In-fixture Controllers (NXFM)
- Lutron: DVTV, DVSTV, and NFTV dimmers
- Wattstopper: ADF120277 and CD4BL (Titan) dimmers

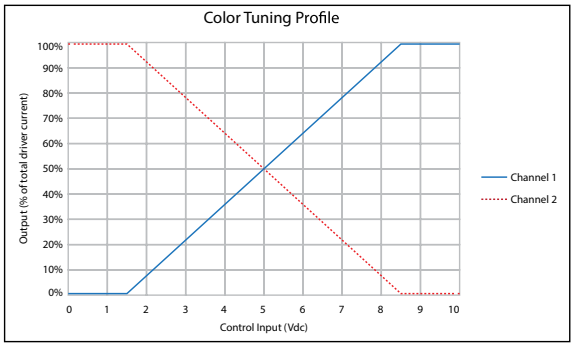

NX Design & Application Guide
NX Brochure
SpectraSync
NX Solutions Guide

© 2021 Litecontrol, a division of Hubbell Lighting, Inc. Specifications subject to change without notice.
65 Spring Street Plympton, MA 02367 / Tel 781.294.0100 / Website www.litecontrol.com

DATE: | LOCATION:
TYPE: L4R | PROJECT:
CATALOG #:

4L-R-D

MOD™ 4 LED RECESSED DIRECT

PERFORMANCE DATA TABLE

The table below shows the delivered lumens for the various lumen outputs. Use this chart in connection with the output multiplier capability to deliver any output required.

Nomenclature	Lumens/Ft	W/Ft	Efficacy
Downlight			
D030 (min)	300	2.6	118
D035	350	3.0	118
D040	400	3.4	118
D045	450	3.8	118
D050	500	4.2	117
D055	550	4.7	117
D060	600	4.8	116
D065	650	5.6	116
D070	700	6.1	116
D075	750	6.5	115
D080	800	7.0	115
D085	850	7.5	113
D090	900	7.9	113
D095	950	8.5	112
D100	1000	9.0	112
D105	1050	9.4	111
D110	1100	10.0	110

(wattage may vary up to 5% from published)

Output Restrictions

Driver options listed below are not available for the output and length as shown.

Restrictions - Direct		Output LPA				
		300	350	400	450	500
Length (feet)	2	LEC, DALI, 347V	LEC, DALI, 347V	DALI, 347V	DALI, 347V	DALI, 347V
	3	DALI, 347V	DALI, 347V			

Output Multiplier Table

Photometrics for the 4L are published here at a nominal 3500K temperature. This table may be used to approximate the lumen values at different Kelvin temperatures. Power consumption would stay the same.

Option	2700K	3000K	3500K	4000K	5000K	2700K 90 CRI	3000K 90 CRI	3500K 90 CRI	4000K 90 CRI	5000K 90 CRI
SOF	0.95	0.98	1.00	1.03	1.05	0.83	0.85	0.88	0.90	0.93
REG	0.73	0.75	0.77	0.79	0.81	0.64	0.65	0.68	0.69	0.72
BWO	0.67	0.69	0.70	0.72	0.76	0.63	0.53	0.47	0.42	0.39
ASYM	0.95	0.98	1.00	1.03	1.05	0.83	0.85	0.88	0.90	0.93
BAT	0.95	0.98	1.00	1.03	1.05	0.83	0.85	0.88	0.90	0.93
DRP	0.95	0.98	1.00	1.03	1.05	0.83	0.85	0.88	0.90	0.93
LPAD	0.86	0.88	0.90	0.93	0.95	0.75	0.77	0.79	0.81	0.84

© 2021 Litecontrol, a division of Hubbell Lighting, Inc. Specifications subject to change without notice.
65 Spring Street Plympton, MA 02367 / Tel 781.294.0100 / Website www.litecontrol.com

LITECONTROL
making light work™

DATE:	LOCATION:
TYPE: L4R	PROJECT:
CATALOG #:	

4L-R-D

MOD™ 4 LED RECESSED DIRECT

DIMENSIONS

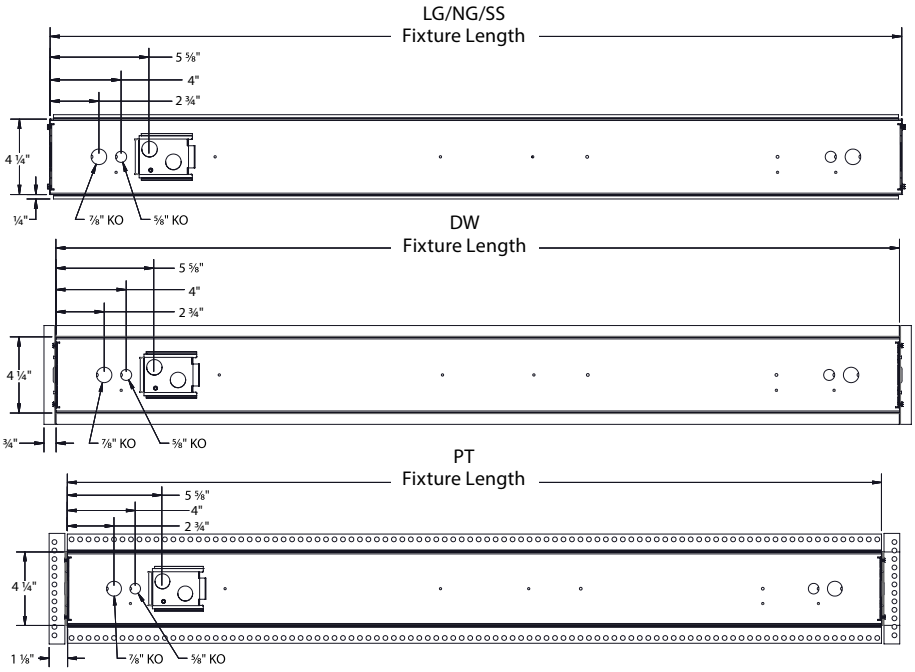

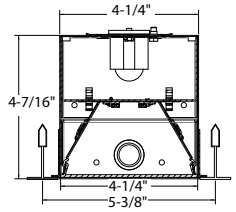

4L-LG

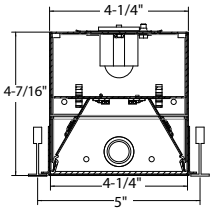

4L-NG

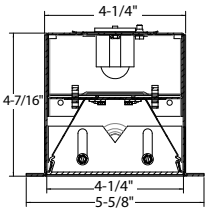

4L-DW

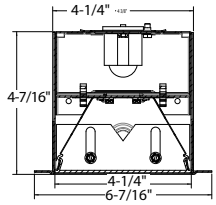

4L-PT

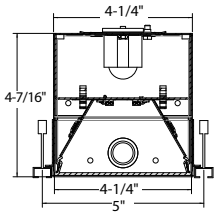

4L-SS

INDIVIDUAL MOUNTING

Drywall

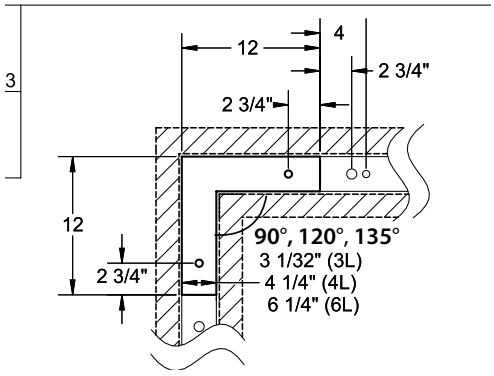

○ = 5/8" DIA. KO'S FOR 1/4 -20 THREADED ROD
○ =7/8" DIA. FEED KO'S

Grid

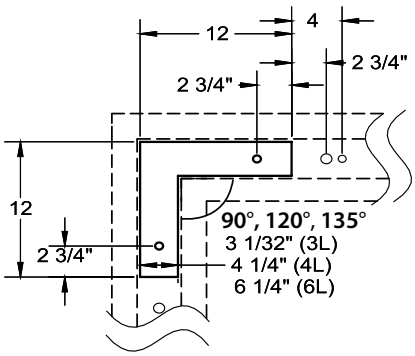

○ = 5/8" DIA. KO'S FOR 1/4 -20 THREADED ROD
○=7/8" DIA. FEED KO'S

PATTERNS

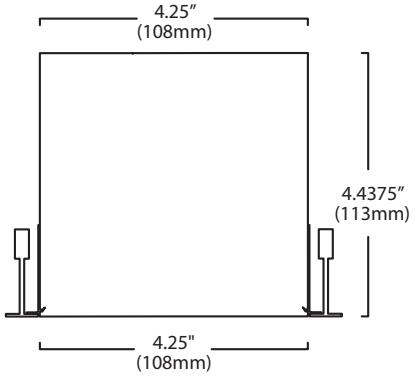

END CAP VIEW

© 2021 Litecontrol, a division of Hubbell Lighting, Inc. Specifications subject to change without notice.

65 Spring Street Plympton, MA 02367 / Tel 781.294.0100 / Website www.litecontrol.com

HUBBELL Lighting

LITECONTROL
making light work™

DATE:	LOCATION:
TYPE: L6	PROJECT:
CATALOG #:	

4L-R-D

MOD™ 4 LED RECESSED DIRECT

MODX™

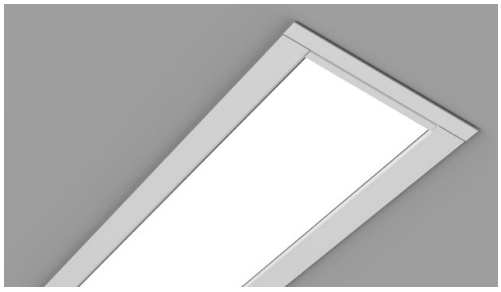

FEATURES

- Variable Intensity technology provides a range of specifiable outputs and resulting fixture wattages
- 2 SDCM color consistency
- End cap design eliminates visible diffuser seams/gaps

See Certification Specifications

CONTROLS

NX DISTRIBUTED™ INTELLIGENCE SpectraSync™

RELATED PRODUCTS

2L-R-D 3L-R-D 6L-R-D

SERVICE PROGRAMS

QS

PHOTOMETRY
DIMENSIONAL DRAWINGS
4L-R-D QUICK-SHIP

SPECIFICATIONS

CONSTRUCTION

- Housing contructed from die-formed and welded steel with wiring knockouts in top
- End caps constructed from die-formed steel. Installs from below via magnetic interface
- End caps overlap diffuser at each fixture end to elimate gaps and LED visibility

OPTICAL PERFORMANCE

- 2 SDCM color consistency, 80 or 90 CRI
- SOF: Soft diffuse acrylic lens
- REG: ½" regressed softglo lens with painted steel inserts. Output multiplier (.77)
- BWO: White blade baffle with softglo lens overlay. Output multiplier (.70)
- ASYM: Asymmetric Highly transmissive diffuse acrylic lens with linear prisms
- BAT: "Batwing" distribution created created from highly transmissive diffuse acrylic lens with linear prisms
- DRP: 1/2" protruding soft diffuse "drop" lens

INSTALLATION

- PT Mounting: Continuous spackle trim with beaded edge welded to housing. Spackle trim allows plaster coat up to fixture edge for clean ceiling appearance
- LG/NG/SS Mounting: Side rails provide continuous mounting, lateral spacing between T-bars and allows clearance for T-bar supporting wire. For Tegular grid mount, fixture will sit level with the T-bar
- DW Mounting: Side rails allow installation into drywall slot. Visible flange is located on all 4 sides of fixture

INSTALLATION (CONTINUED)

- Illuminated corners available in 90°, 120°, 135°. One piece construction, ready to install, with diffusers that match adjoining fixtures. Corner system connectors must be used to form patterns. The length of each outside or inside illuminated corner is 12"
- Fixture weight: 3lbs/ft

ELECTRICAL

- Variable Intensity (VI) technology allows precise specification of fixture output/ wattage. Fixture will be programmed and labeled to specification. Indirect and direct hemispheres can be independently specified
- LED boards and drivers can be accessed and removed from fixture, while installed
- Entire LED module can be removed and replaced
- 1C (1 Circuit) Fixture wired for a single circuit
- Emergency Battery: 10W battery powered driver. Provides a minimum of 90 minutes of emergency lighting. Inverter-Compatible. Provided by others. Available in 4'+' fixtures

CONTROLS

- Sensors install between diffusers
- NX Distributed Intelligence™: Supports indoor and outdoor applications, wired, wireless and hybrid networked NX lighting control deployments and enabled emerging applications, such as Hubbell Lighting's SpectraSync™ Color Tuning Technology
- SpectraSync™ Color Tuning Technology: Control your space based on the needs of the application, specific activities throughout the day and preferences of the occupants

CERTIFICATIONS

- DLC® (DesignLights Consortium) Qualified - see www.designlights.org
- CSA listed for damp location
- IBEW
- AF of L
- UL924
- This product qualifies as a "designated country construction material" per FAR 52.225-11 Buy American-Construction. Materials under Trade Agreements effective 8/14/2020. See Buy American Solutions. Contact factory for configurations including SpectraSync, NX, or sensors.

WARRANTY

- LED boards - 5 years
- LED drivers (standard) - 5 years
- LED drivers (Lutron) - 3 years
- See www.litecontrol.com for details

KEY DATA	
Lumen Range Per Foot	D: 300–1100
Wattage Range Per Foot	2.6–10.0
Efficacy Range (LPW)	110–118
Rated Life (Hours)	L70: >61,000 L90: >61,000

© 2021 Litecontrol a division of Hubbell Lighting, Inc. Specifications subject to change without notice.
65 Spring Street Plympton, MA 02367 / Tel 781.294.0100 / Website www.litecontrol.com

HUBBELL Lighting

LITECONTROL
making light work™

4L-R-D

MOD™ 4 LED RECESSED DIRECT

DATE: | LOCATION:

TYPE: L6 | PROJECT:

CATALOG #:

= Service Program

QS 10

Click icon for a list of Quick-Ship options

ORDERING GUIDE

Example: 4L-DW-D-8-.3-08-SOF-C1-27K-D030-D01-1C-UNV

CATALOG # 4L-R-D-6

4L	GRID	D	6		06	SOF
Series	**Ceiling Type** [1]	**Fixture Distribution**	**Row Length (In Feet)**	**Row Length Adder** [2]	**Max Length in Row**	**Direct Optical Distribution**
4L MOD	**DW** Drywall	**D** Direct	**__'** Enter in foot increments	**.3** Row length +3"	**02** 2', 609 mm	**SOF** Soft Diffuse Lens, Lambertian
	PT Drywall with plaster trim (trimless finish)	**AD** Asymmetric Direct		**.6** Row length +6"	**03** 3', 914 mm	**REG** Regressed Diffuse Lens [3]
	LG 15/16 Grid			**.9** Row length +9"	**04** 4', 1219 mm	**BWO** Blade Baffle with Overlay [3]
	NG 9/16 Grid			Measured in inches	**05** 5', 1524 mm	**ASYM** Asymmetric Diffuse Lens [3, 4]
	SS 9/16 Screw Slot				**06** 6', 1829 mm	**BAT** Batwing Lens
					08 8', 2438 mm	**DRP** Drop Lens [3, 5]

C1	2750T	625 LM	D01		UNV
Finish/Color [6]	**Color Temperature**	**Direct Output/ft** [8]	**Driver**	**Circuiting**	**Voltage**
C1 Matte White (Default)	**27K** 2700K [5]	**D030** 300 (min) [9]	**D01** 1% Dimming, 0-10V	**1C** 1 Circuit	**UNV** Universal Voltage (120V through 277V)
C2 Textured Matte White	**30K** 3000K	*to*	**D00** 1% Dim-to-Off, 0-10V		**347** 347 Volt [5, 11]
C3 Light Silver	**35K** 3500K	**D125** 1250 (max)	**D05** SpectraSync 5% Dimming, 0-10V [10]		
C4 Machined Aluminum	**40K** 4000K		**DS1** 1% Dimming w/ Soft Start, 0-10V		
C5 Carbon Black	**50K** 5000K [5]		**DS0** 1% Dim-to-Off w/ Soft Start, 0-10V		
C6 Textured Camera Black	**27K9** 2700K, 90 CRI [5]		**LEC** Hi-lume 1% Ecosystem LED Driver		
CC Custom Color	**30K9** 3000K, 90 CRI		**DALI** DALI [5]		
	35K9 3500K, 90 CRI		**DALIP** Powered by DALI (2.0) [5]		
	40K9 4000K, 90 CRI		**NDM** Non-Dimming		
	50K9 5000K, 90 CRI [5]				
	2230TD 2200K-3000K SpectraSync™ Dim-to-Warm [7]				
	2750T 2700K-5000K SpectraSync™ Tunable White [7]				
	2765T 2700K-6500K SpectraSync™ Tunable White [7]				

OPTIONAL

Nightlight	Emergency	Thru-wiring	Patterns [5, 14]	Chicago Enviromental Air Modification
NL Nightlight Circuit Required. Enter quantity. 2NL = 2 nightlight circuits/row	**EF** 10W Emergency Battery Pack. Enter quantity. 2EF = 2 emergency batteries/row. [12]	**W1** No Thru Wire	**C90L** Illuminated 90° Corner	**CCEA** Chicago Environmental Air Modification
		W2 Provide Normal and Emergency/ Nightlight Thru Wiring [13]	**C120L** Illuminated 120° Corner	
		W3 Provide Normal Thru Wiring Only	**C135L** Illuminated 135° Corner	

Control Options [5]

NX Standalone

NXS NX, PIR BT Occupancy/Daylight Sensor, Slide Mount [15, 16, 17]

NX Networked – Wired

NXE NX, Dual SmartPORTs [15, 16]

NXES NX, PIR BT Occupancy/Daylight Sensor, Slide Mount, Dual SmartPORTs [15, 16]

NX Networked – Wireless

NXSW NX Wireless, PIR BT Occupancy/Daylight Sensor [15, 16, 17]

NXWE NX Wireless Wireless Enabled [15, 16]

NX Networked – Wired/Wireless

NXSWD NX Wireless, PIR BT Occupancy/Daylight Sensor, Dual SmartPORTs [15, 16, 17]

NXWD NX Wireless, Dual SmartPORTs [15, 16]

Sensors

SD1 Daylight Sensor Required. Enter quantity. 2SD1 = 2 daylight sensors/row

SO1 Occupancy Sensor Required. Enter quantity. 2SO1 = 2 occupancy sensors/row

SZ1 Zigbee Radio Module Required. Enter quantity. 2SZ1=2 radio modules/row. Radio controls up to 10 drivers. Must be ordered with D00.

Notes:

1 Ceiling type can not be retrofitted in the field.
2 Excludes individual grid mounts
3 Not Available with Patterns.
4 Must be ordered with AD.
5 Additional lead time may be applicable. Contact factory.
6 Visit www.litecontrol.com/finishes for details.
7 Must be ordered with D05 Driver option; excludes 2' lengths and patterns.
8 Specifiable in 50 lumen increments. Reference the Performance Data Table for full performance offering and exceptions.
9 D030 not available in 2'
10 Must be ordered with 2230TD, 2750T or 2765T Option
11 Excludes Emergency Battery Pack 'EF' Option. Excludes DALI, DALIP and Lutron (LEC) Dimming Drivers
12 EF - 10W battery powered driver. Provides a minimum of 90 minutes of emergency lighting. Inverter-Compatible. Provided by others.
13 Only applicable when specified with Emergency/Nightlight.
14 Contact Factory for pattern configurations. Approval drawings required.

NX In-Fixture Control Options:

15 Not available for row mounting. Only available with 0-10V Driver options. Contact factory for Length restrictions.
16 Refer to NX Integrated Controls Reference Table for Functionality of Options.
17 NX Sensors with Bluetooth, BLE, provides remote commission only.

© 2021 Litecontrol, a division of Hubbell Lighting, Inc. Specifications subject to change without notice.
65 Spring Street Plympton, MA 02367 / Tel 781.294.0100 / Website www.litecontrol.com

HUBBELL Lighting

DATE: | LOCATION:
TYPE: L6 | PROJECT:
CATALOG #:

4L-R-D

MOD™ 4 LED RECESSED DIRECT

CONTROLS

NX DISTRIBUTED™ INTELLIGENCE

NX Distributed Intelligence™ Lighting Controls:

Supports both indoor and outdoor applications in a variety of deployment options- wired, wireless, hybrid.
Integrates with and enables a wide array of luminaires including those with SpectraSync Color Tuning Technology.

NX INTEGRATED CONTROLS REFERENCE								
NX Option	Sensor	Networkable	Scheduling	Occupancy	Daylight Harvesting	0–10V Dimming	On/off Control	Bluetooth® App Programming
NX Standalone								
NXS	NXSMP-SMI	No	Yes	Yes	Yes	Yes	Yes	Yes
NX Networked – Wired								
NXE	N/A	Yes	Yes	No	No	Yes	Yes	Requires NXBTC/R [1]
NXES	NXSMP-SMI	Yes	Yes	Yes	Yes	Yes	Yes	Yes
NX Networked – Wireless								
NXSW	NXSMP-SMI	Yes	Yes	Yes	Yes	Yes	Yes	Yes
NXWE [2]	N/A	Yes	Yes	No	No	Yes	Yes	No[3]
NX Networked – Wired/Wireless								
NXSWD	NXSMP-SMI	Yes	Yes	Yes	Yes	Yes	Yes	Yes
NXWD	N/A	Yes	Yes	No	No	Yes	Yes	Requires NXBTC/R [1,3]

1 NXBTC/R needs to be plugged into an available NX SmartPort™ on the fixture network
2 Programming via App requires factory assistance
3 To program NXWE option, need to consult factory. If connected to an area controller, programming can be done from that

SpectraSync™ Color Tuning Technology:

Control your space based on the needs of the application, specific activities throughout the day and preferences of the occupants with distinct SpectraSync™ Color Tuning Technologies.

SpectraSync™ Color Tuning Technology

SPECTRASYNC COLOR TUNING TECHNOLOGY		
Mode	Kelvin Range	Description
Dim to Warm	2200K-3000K	Mimics the familiar warming effect that occurs with traditional incandescent sources as they are dimmed
Tunable White	2700K-5000K 2700K-6500K	Offers users the ability to tailor CCT to their personal preference, enhancing task visibility, material and colors or the aesthetics of the space
Scheduled White	2700K-5000K 2700K-6500K	Mimics the rhythm of natural light or follows an alternative user-defined schedule throughout the day, enhancing an occupant's mood and well-being

SpectraSync Tunable White

Available in two options: 2750T (2700K–5000K) or 2765T (2700K–6500K).
Requires two 0–10V controllers, one for intensity and one for CCT.
Minimum 5% dimming.

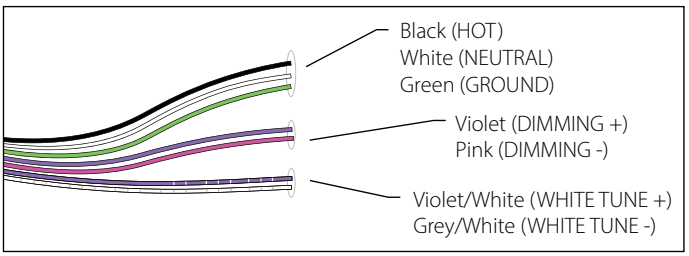

SpectraSync Tunable White luminaires are provided with two 0–10V circuits. The violet and pink circuit is for wiring to any qualified 0–10V controller for dimming. The violet/white and grey/white circuit is for wiring to any qualified 0–10V controller for Tunable White CCT control.

Controller Manufacturer Data

SpectraSync Tunable White was designed to be used with sinking style dimmers (provided by others) and is compatible with:

- Hubbell Control Solutions (HCS): NX Distributed Intelligence™ Room Controllers (NXRC) and In-fixture Controllers (NXFM)
- Lutron: DVTV, DVSTV, and NFTV dimmers
- Wattstopper: ADF120277 and CD4BL (Titan) dimmers

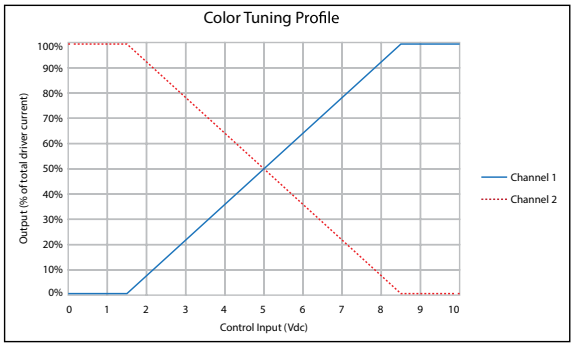

NX Design & Application Guide
NX Brochure
SpectraSync
NX Solutions Guide

© 2021 Litecontrol, a division of Hubbell Lighting, Inc. Specifications subject to change without notice.
65 Spring Street Plympton, MA 02367 / Tel 781.294.0100 / Website www.litecontrol.com

DATE: | LOCATION:
TYPE: L6 | PROJECT:
CATALOG #:

4L-R-D

MOD™ 4 LED RECESSED DIRECT

PERFORMANCE DATA TABLE

The table below shows the delivered lumens for the various lumen outputs. Use this chart in connection with the output multiplier capability to deliver any output required.

Nomenclature	Lumens/Ft	W/Ft	Efficacy
Downlight			
D030 (min)	300	2.6	118
D035	350	3.0	118
D040	400	3.4	118
D045	450	3.8	118
D050	500	4.2	117
D055	550	4.7	117
D060	600	4.8	116
D065	650	5.6	116
D070	700	6.1	116
D075	750	6.5	115
D080	800	7.0	115
D085	850	7.5	113
D090	900	7.9	113
D095	950	8.5	112
D100	1000	9.0	112
D105	1050	9.4	111
D110	1100	10.0	110

(wattage may vary up to 5% from published)

Output Restrictions

Driver options listed below are not available for the output and length as shown.

Restrictions - Direct		Output LPA				
		300	350	400	450	500
Length (feet)	2	LEC, DALI, 347V	LEC, DALI, 347V	DALI, 347V	DALI, 347V	DALI, 347V
	3	DALI, 347V	DALI, 347V			

Output Multiplier Table

Photometrics for the 4L are published here at a nominal 3500K temperature. This table may be used to approximate the lumen values at different Kelvin temperatures. Power consumption would stay the same.

Option	2700K	3000K	3500K	4000K	5000K	2700K 90 CRI	3000K 90 CRI	3500K 90 CRI	4000K 90 CRI	5000K 90 CRI
SOF	0.95	0.98	1.00	1.03	1.05	0.83	0.85	0.88	0.90	0.93
REG	0.73	0.75	0.77	0.79	0.81	0.64	0.65	0.68	0.69	0.72
BWO	0.67	0.69	0.70	0.72	0.76	0.63	0.53	0.47	0.42	0.39
ASYM	0.95	0.98	1.00	1.03	1.05	0.83	0.85	0.88	0.90	0.93
BAT	0.95	0.98	1.00	1.03	1.05	0.83	0.85	0.88	0.90	0.93
DRP	0.95	0.98	1.00	1.03	1.05	0.83	0.85	0.88	0.90	0.93
LPAD	0.86	0.88	0.90	0.93	0.95	0.75	0.77	0.79	0.81	0.84

© 2021 Litecontrol, a division of Hubbell Lighting, Inc. Specifications subject to change without notice.
65 Spring Street Plympton, MA 02367 / Tel 781.294.0100 / Website www.litecontrol.com

LITECONTROL
making light work™

DATE:	LOCATION:
TYPE: L6	PROJECT:
CATALOG #:	

4L-R-D

MOD™ 4 LED RECESSED DIRECT

DIMENSIONS

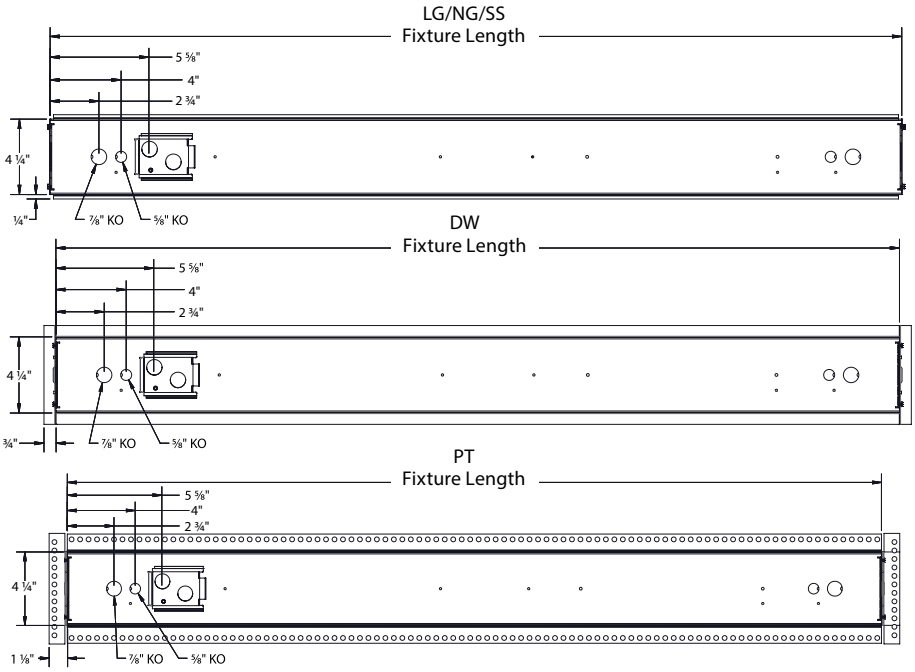

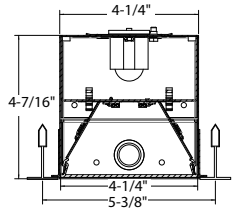

4L-LG

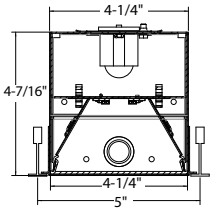

4L-NG

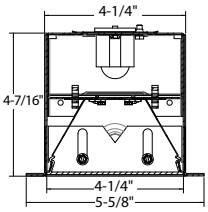

4L-DW

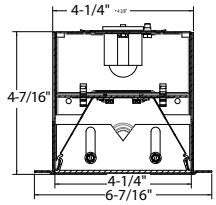

4L-PT

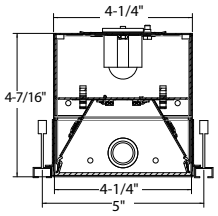

4L-SS

INDIVIDUAL MOUNTING

Drywall

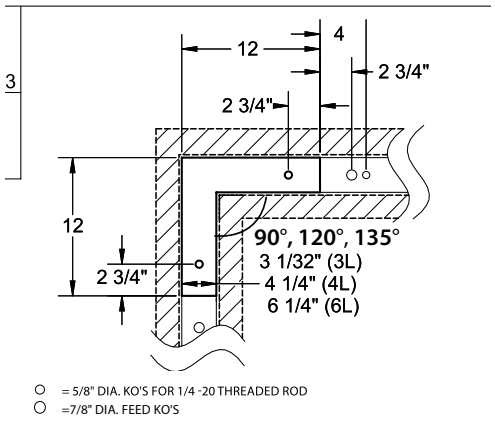

Grid

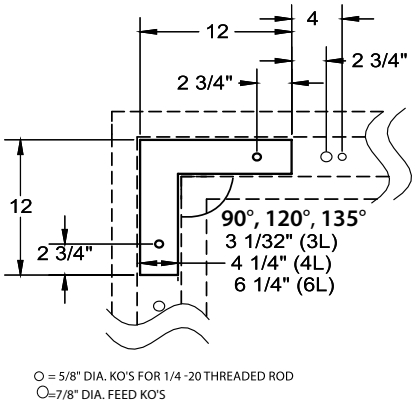

PATTERNS

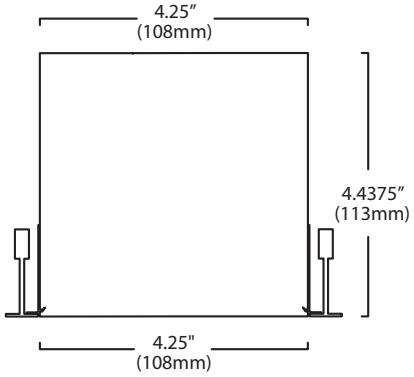

END CAP VIEW

© 2021 Litecontrol, a division of Hubbell Lighting, Inc. Specifications subject to change without notice.

65 Spring Street Plympton, MA 02367 / Tel 781.294.0100 / Website www.litecontrol.com

HUBBELL Lighting

LITECONTROL
making light work™

DATE:	LOCATION:
TYPE: L8	PROJECT:
CATALOG #:	

4L-P-D

MOD™ 3 LED PENDANT DIRECT

MODX

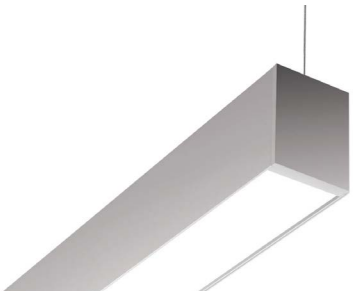

FEATURES

- Variable Intensity technology provides a range of specifiable outputs and resulting fixture wattages
- 2 SDCM color consistency
- End cap design eliminates visible diffuser seams/gaps

See Certification Specifications

CONTROLS

NX DISTRIBUTED INTELLIGENCE™ SpectraSync™

RELATED PRODUCTS

2L-P-D 3L-P-D 6L-P-D

SERVICE PROGRAMS

QS

SPECIFICATIONS

CONSTRUCTION

- Housing constructed from extruded aluminum
- End caps constructed from die cast aluminum with magnetic interface
- End caps overlap diffuser at each fixture end to elimate gaps and LED visibility

OPTICAL PERFORMANCE

- 2 SDCM color consistency, 80 or 90 CRI
- SOF: Soft diffuse acrylic lens
- REG: ½" regressed softglo lens with painted steel inserts. Output multiplier (.77)
- BWO: White blade baffle with softglo lens overlay. Output multiplier (.70)
- ASYM: Asymmetric Highly transmissive diffuse acrylic lens with linear prisms
- BAT: "Batwing" distribution created created from highly transmissive diffuse acrylic lens with linear prisms
- DRP: 1/2" protruding soft diffuse "drop" lens

INSTALLATION

- Suspension required at every row joint. 3/64" diameter field-adjustable aircraft cables, ships separately
- Low profile cable gripper limits visibility while providing maximum horizontal balance adjustment
- Pendant locations at ends of rows (or individual fixtures) are 1/2" from fixture ends
- Pendant attachment allows for horizontal adjustment to "fine-tune" side-to-side leveling
- Illuminated corners available in 90°, 120°, 135°. One piece construction, ready to install, with diffusers that match adjoining fixtures. Corner system connectors must be used to form patterns. The length of each outside or inside illuminated corner is 12"

INSTALLATION (CONTINUED)

- Square and Triangle non-illuminated connectors match fixture width for continuous look
- Fixture weight: 3lbs/ft

ELECTRICAL

- Variable Intensity (VI) technology allows precise specification of fixture output/ wattage. Fixture will be programmed and labeled to specification. Indirect and direct hemispheres can be independently specified
- LED boards and drivers can be accessed and removed from fixture, while installed
- Entire LED module can be removed and replaced
- 1C (1 Circuit) Fixture wired for a single circuit
- Non-feed: 2" diameter canopy covers provided (unless 5" non-feed cover is specified)
- Feed Cord: 4-wire, 7 amps max; 5-wire, 5 amps max
- Emergency Battery: 10W battery powered driver. Provides a minimum of 90 minutes of emergency lighting. Inverter-Compatible. Provided by others. Available in 4'+' fixtures

CONTROLS

- Sensors install between diffusers
- NX Distributed Intelligence™: Supports indoor and outdoor applications, wired, wireless and hybrid networked NX lighting control deployments and enabled emerging applications, such as Hubbell Lighting's SpectraSync™ Color Tuning Technology
- SpectraSync™ Color Tuning Technology: Control your space based on the needs of the application, specific activities throughout the day and preferences of the occupants

CERTIFICATIONS

- DLC® (DesignLights Consortium) Qualified - see www.designlights.org
- CSA listed for damp location
- IBEW
- AF of L
- UL924
- This product qualifies as a "designated country construction material" per FAR 52.225-11 Buy American-Construction. Materials under Trade Agreements effective 8/14/2020. See Buy American Solutions. Contact factory for configurations including SpectraSync, NX, or sensors.

WARRANTY

- LED boards - 5 years
- LED drivers (standard) - 5 years
- LED drivers (Lutron) - 3 years
- See www.litecontrol.com for details

KEY DATA	
Lumen Range Per Foot	D: 300 - 1100
Wattage Range Per Foot	2.6-10.0
Efficacy Range (LPW)	110-118
Rated Life (Hours)	L70: >61,000 L90: >61,000

© 2021 Litecontrol a division of Hubbell Lighting, Inc. Specifications subject to change without notice.
65 Spring Street Plympton, MA 02367 / Tel 781.294.0100 / Website www.litecontrol.com

HUBBELL Lighting

LITECONTROL
making light work™

4L-P-D

MOD™ 3 LED PENDANT DIRECT

DATE: | LOCATION:

TYPE: L8 | PROJECT:

CATALOG #:

= Service Program

QS 10

Click icon for a list of Quick-Ship options

ORDERING GUIDE

8FT CONTINIOUS RUN

Example: 4L-P-D-8-08-SOF-C1-27K-D030-D01-1C-UNV-FA1

CATALOG # 4L-P-D-8

4L	P	D	8	08	SOF	C1
Series	**Mounting**	**Fixture Distribution**	**Row Length (In Feet)**	**Max Length In Row**	**Direct Optical Distribution**	**Finish/Color [4]**
4L MOD	**P** Pendant	**D** Direct	**__'** Enter in foot increments	**02** 2', 609mm	**SOF** Soft Diffuse Lens, Lambertian	**C1** Matte White (Default)
		AD Asymmetric Direct		**03** 3', 914mm	**REG** Regressed Diffuse Lens [1]	**C2** Textured Matte White
				04 4', 1219mm	**BWO** Blade Baffle with Overlay [1]	**C3** Light Silver
				05 5', 1524mm	**ASYM** Asymmetric Diffuse Lens [1, 2]	**C4** Machined Aluminum
				06 6', 1829mm	**BAT** Batwing Lens	**C5** Carbon Black
				08 8', 2438mm	**DRP** Drop Lens [1, 3]	**C6** Textured Camera Black
						CC Custom Color

2750T	375 LM	D01		UNV	
Color Temperature	**Direct Output/ft [6]**	**Driver**	**Circuiting**	**Voltage**	**Suspension Kit [10]**
27K 2700K [3]	**D030** 300 (min) [7]	**D01** 1% Dimming, 0-10V	**1C** 1 Circuit	**UNV** Universal Voltage (120V through 277V)	**FA1** Suspension Kit, 51"
30K 3000K	*to*	**D00** 1% Dim-to-Off, 0-10V		**347** 347 Volt [3, 9]	**FA2** Suspension Kit, 87"
35K 3500K	**D125** 1250 (max)	**D05** SpectraSync 5% Dimming, 0-10V [8]			**FA3** Suspension Kit, 219"
40K 4000K		**DS1** 1% Dimming w/ Soft Start, 0-10V			**FA4** Suspension Kit, 363"
50K 5000K [3]		**DS0** 1% Dim-to-Off w/ Soft Start, 0-10V			
27K9 2700K, 90 CRI [3]		**LEC** Hi-lume 1% Ecosystem LED Driver			
30K9 3000K, 90 CRI		**DALI** DALI [3]			
35K9 3500K, 90 CRI		**DALIP** Powered by DALI (2.0) [3]			
40K9 4000K, 90 CRI		**NDM** Non-Dimming			
50K9 5000K, 90 CRI [3]					
2230TD 2200K-3000K SpectraSync™ Dim-to-Warm [5]					
2750T 2700K-5000K SpectraSync™ Tunable White [5]					
2765T 2700K-6500K SpectraSync™ Tunable White [5]					

OPTIONAL

Nightlight	Emergency	Thru-wiring	Patterns [3, 13]	T-Bar Clips [14]
NL Nightlight Circuit Required. Enter quantity. 2NL = 2 nightlight circuits/row	**EF** 10W Emergency Battery Pack. Enter quantity. 2EF = 2 emergency batteries/row. [11]	**W1** No Thru Wire	**C90L** Illuminated 90° Corner	**CB1** T-bar clip - 15/16"
		W2 Provide Normal and Emergency/ Nightlight Thru Wiring [12]	**C120L** Illuminated 120° Corner	**CB2** T-bar clip - 9/16"
		W3 Provide Normal Thru Wiring Only	**C135L** Illuminated 135° Corner	**CB3** T-bar clip - 9/16" SS

Control Options [3]

NX Standalone

NXS NX, PIR BT Occupancy/Daylight Sensor, Slide Mount [15, 16, 17]

NX Networked – Wired

NXE NX, Dual SmartPORTs [15, 16]

NXES NX, PIR BT Occupancy/Daylight Sensor, Slide Mount, Dual SmartPORTs [15, 16]

NX Networked – Wireless

NXSW NX Wireless, PIR BT Occupancy/Daylight Sensor [15, 16, 17]

NXWE NX Wireless Wireless Enabled [15, 16]

NX Networked – Wired/Wireless

NXSWD NX Wireless, PIR BT Occupancy/Daylight Sensor, Dual SmartPORTs [15, 16, 17]

NXWD NX Wireless, Dual SmartPORTs [15, 16]

Sensors

SD1 Daylight Sensor Required. Enter quantity. 2SD1 = 2 daylight sensors/row

SO1 Occupancy Sensor Required. Enter quantity. 2SO1 = 2 occupancy sensors/row

Notes:

1 Not Available with Patterns.
2 Must be ordered with AD.
3 Additional lead time may be applicable. Contact factory.
4 Visit www.litecontrol.com/finishes for details.
5 Must be ordered with D05 Driver option; excludes 2' lengths and patterns.
6 Specifiable in 50 lumen increments. Reference the Performance Data Table for full performance offering and exceptions.
7 D030 not available in 2'
8 Must be ordered with 2230TD, 2750T or 2765T Option
9 Excludes Emergency Battery Pack 'EF' Option. Excludes DALI, DALIP and Lutron (LEC) Dimming Drivers
10 Add suffix /V to replace all 2" non-feed canopy covers with 5" canopy covers. FA1/V = 51" suspension kit w/ 5" canopies; canopies and feed cord are supplied in white regardless of fixture color unless otherwise specified.
11 EF - 10W battery powered driver. Provides a minimum of 90 minutes of emergency lighting. Inverter-Compatible. Provided by others.
12 Only applicable when specified with Emergency/Nightlight.
13 Contact Factory for pattern configurations. Approval drawings required.
14 Includes Luminaire Canopy Box.

NX In-Fixture Control Options:

15 Not available for row mounting. Only available with 0-10V Driver options. Contact factory for Length restrictions.
16 Refer to NX Integrated Controls Reference Table for Functionality of Options.
17 NX Sensors with Bluetooth, BLE, provides remote commission only.

© 2021 Litecontrol, a division of Hubbell Lighting, Inc. Specifications subject to change without notice.
65 Spring Street Plympton, MA 02367 / Tel 781.294.0100 / Website www.litecontrol.com

HUBBELL Lighting

DATE: | LOCATION:
TYPE: L8 | PROJECT:
CATALOG #:

4L-P-D

MOD™ 3 LED PENDANT DIRECT

CONTROLS

NX DISTRIBUTED™ INTELLIGENCE

NX Distributed Intelligence™ Lighting Controls:

Supports both indoor and outdoor applications in a variety of deployment options- wired, wireless, hybrid.
Integrates with and enables a wide array of luminaires including those with SpectraSync Color Tuning Technology.

NX INTEGRATED CONTROLS REFERENCE								
NX Option	Sensor	Networkable	Scheduling	Occupancy	Daylight Harvesting	0–10V Dimming	On/off Control	Bluetooth® App Programming
NX Standalone								
NXS	NXSMP-SMI	No	Yes	Yes	Yes	Yes	Yes	Yes
NX Networked – Wired								
NXE	N/A	Yes	Yes	No	No	Yes	Yes	Requires NXBTC/R [1]
NXES	NXSMP-SMI	Yes	Yes	Yes	Yes	Yes	Yes	Yes
NX Networked – Wireless								
NXSW	NXSMP-SMI	Yes	Yes	Yes	Yes	Yes	Yes	Yes
NXWE [2]	N/A	Yes	Yes	No	No	Yes	Yes	No[3]
NX Networked – Wired/Wireless								
NXSWD	NXSMP-SMI	Yes	Yes	Yes	Yes	Yes	Yes	Yes
NXWD	N/A	Yes	Yes	No	No	Yes	Yes	Requires NXBTC/R [1,3]

1 NXBTC/R needs to be plugged into an available NX SmartPort™ on the fixture network
2 Programming via App requires factory assistance
3 To program NXWE option, need to consult factory. If connected to an area controller, programming can be done from that

SpectraSync™ Color Tuning Technology:

Control your space based on the needs of the application, specific activities throughout the day and preferences of the occupants with distinct SpectraSync™ Color Tuning Technologies.

SpectraSync™ Color Tuning Technology

SPECTRASYNC COLOR TUNING TECHNOLOGY		
Mode	Kelvin Range	Description
Dim to Warm	2200K-3000K	Mimics the familiar warming effect that occurs with traditional incandescent sources as they are dimmed
Tunable White	2700K-5000K 2700K-6500K	Offers users the ability to tailor CCT to their personal preference, enhancing task visibility, material and colors or the aesthetics of the space
Scheduled White	2700K-5000K 2700K-6500K	Mimics the rhythm of natural light or follows an alternative user-defined schedule throughout the day, enhancing an occupant's mood and well-being

SpectraSync Tunable White

Available in two options: 2750T (2700K–5000K) or 2765T (2700K–6500K).
Requires two 0–10V controllers, one for intensity and one for CCT.
Minimum 5% dimming.

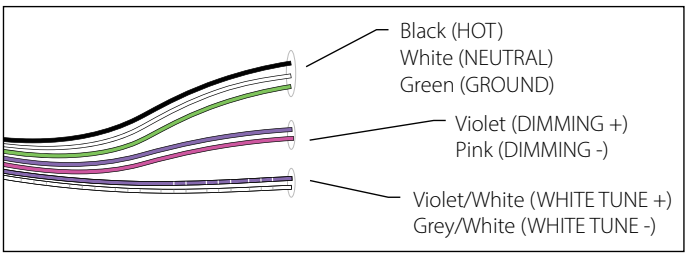

SpectraSync Tunable White luminaires are provided with two 0–10V circuits. The violet and pink circuit is for wiring to any qualified 0–10V controller for dimming. The violet/white and grey/white circuit is for wiring to any qualified 0–10V controller for Tunable White CCT control.

Controller Manufacturer Data

SpectraSync Tunable White was designed to be used with sinking style dimmers (provided by others) and is compatible with:

- Hubbell Control Solutions (HCS): NX Distributed Intelligence™ Room Controllers (NXRC) and In-fixture Controllers (NXFM)
- Lutron: DVTV, DVSTV, and NFTV dimmers
- Wattstopper: ADF120277 and CD4BL (Titan) dimmers

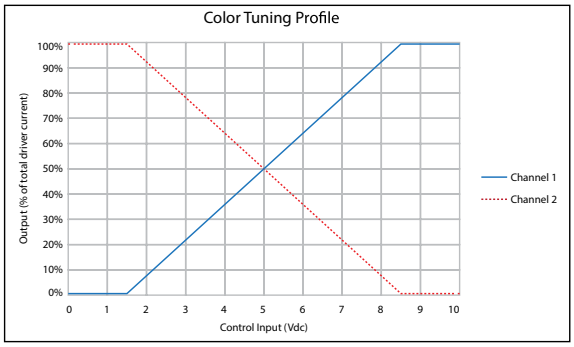

NX Design & Application Guide
NX Brochure
SpectraSync
NX Solutions Guide

© 2021 Litecontrol, a division of Hubbell Lighting, Inc. Specifications subject to change without notice.
65 Spring Street Plympton, MA 02367 / Tel 781.294.0100 / Website www.litecontrol.com

DATE: | LOCATION:
TYPE: L8 | PROJECT:
CATALOG #:

4L-P-D

MOD™ 3 LED PENDANT DIRECT

PERFORMANCE DATA TABLE

The table below shows the delivered lumens for the various lumen outputs. Use this chart in connection with the output multiplier capability to deliver any output required.

Nomenclature	Lumens/Ft	W/Ft	Efficacy
Downlight			
D030 (min)	300	2.6	118
D035	350	3.0	118
D040	400	3.4	118
D045	450	3.8	118
D050	500	4.2	118
D055	550	4.7	117
D060	600	5.1	117
D065	650	5.6	116
D070	700	6.1	116
D075	750	6.5	115
D080	800	7.0	115
D085	850	7.5	113
D090	900	7.9	113
D095	950	8.5	112
D100	1000	9.0	112
D105	1050	9.4	111
D110 (max)	1100	10.0	110

(wattage may vary up to 5% from published)

Output Restrictions

Driver options listed below are not available for the output and length as shown.

Restrictions - Direct		Output LPA						
		300	350	400	450	500	950	1000
Length (feet)	2	LEC, DALI, 347V	LEC, DALI, 347V	DALI, 347V	DALI, 347V	DALI, 347V	LEC	LEC
	3	DALI, 347V	DALI, 347V				LEC	LEC
	4						LEC	LEC
	5						LEC	LEC
	6						LEC	LEC
	8						LEC	LEC

Output Multiplier Table

Photometrics for the 4L are published here at a nominal 3500K temperature. This table may be used to approximate the lumen values at different Kelvin temperatures. Power consumption would stay the same.

Option	2700K	3000K	3500K	4000K	5000K	2700K 90 CRI	3000K 90 CRI	3500K 90 CRI	4000K 90 CRI	5000K 90 CRI
SOF	0.95	0.98	1.00	1.03	1.05	0.83	0.85	0.88	0.90	0.93
REG	0.73	0.75	0.77	0.79	0.81	0.64	0.65	0.68	0.69	0.72
BWO	0.67	0.69	0.70	0.72	0.76	0.63	0.53	0.47	0.42	0.39
ASYM	0.95	0.98	1.00	1.03	1.05	0.83	0.85	0.88	0.90	0.93
BAT	0.95	0.98	1.00	1.03	1.05	0.83	0.85	0.88	0.90	0.93
DRP	0.95	0.98	1.00	1.03	1.05	0.83	0.85	0.88	0.90	0.93
LPAD	0.86	0.88	0.90	0.93	0.95	0.75	0.77	0.79	0.81	0.84

© 2021 Litecontrol, a division of Hubbell Lighting, Inc. Specifications subject to change without notice.
65 Spring Street Plympton, MA 02367 / Tel 781.294.0100 / Website www.litecontrol.com

LITECONTROL
making light work™

DATE:	LOCATION:
TYPE: L8	PROJECT:
CATALOG #:	

4L-P-D

MOD™ 3 LED PENDANT DIRECT

DIMENSIONS

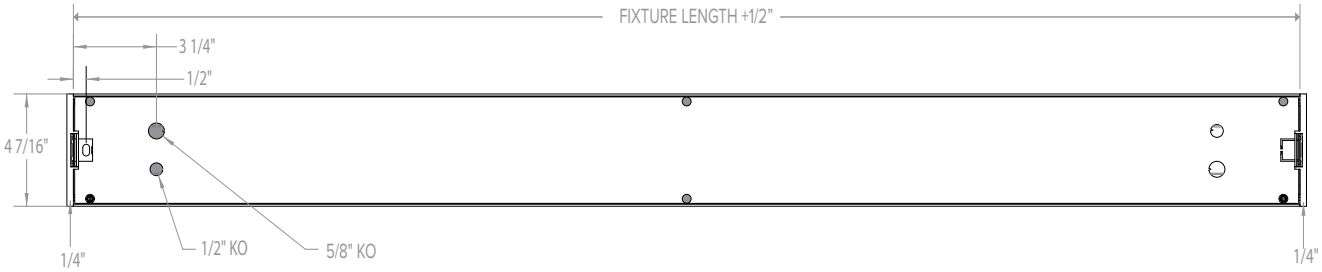

INDIVIDUAL MOUNTING

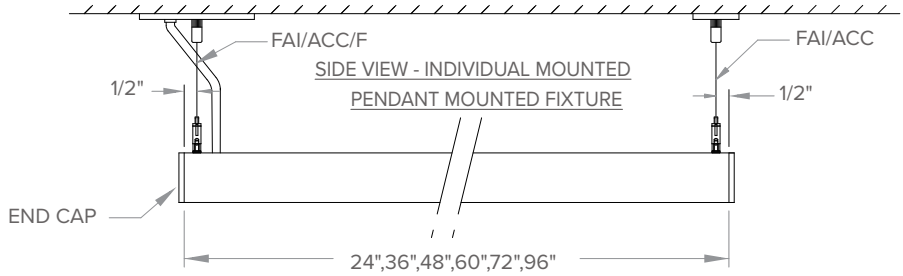

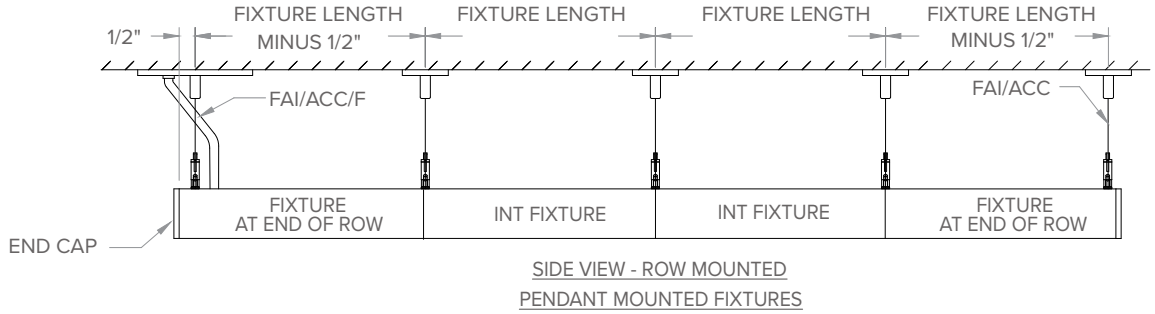

ROW MOUNTING

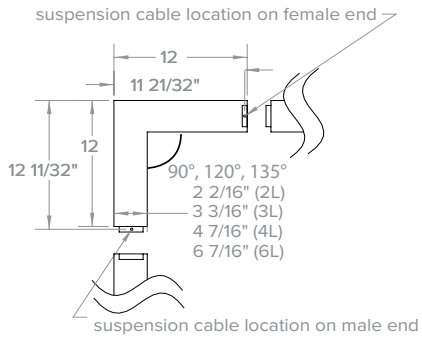

PATTERNS

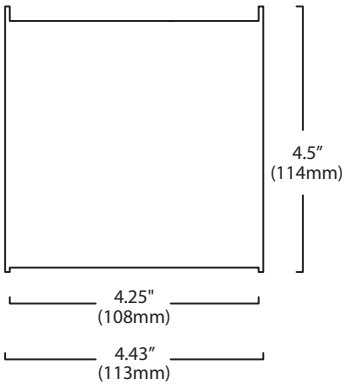

END CAP VIEW

© 2021 Litecontrol, a division of Hubbell Lighting, Inc. Specifications subject to change without notice.

65 Spring Street Plympton, MA 02367 / Tel 781.294.0100 / Website www.litecontrol.com

HUBBELL Lighting

LITECONTROL
making light work™

DATE:	LOCATION:
TYPE: L9	PROJECT:
CATALOG #:	

4L-P-D

MOD™ 3 LED PENDANT DIRECT

MODX™

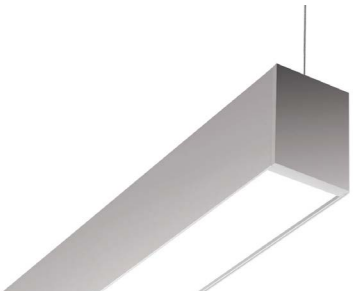

FEATURES

- Variable Intensity technology provides a range of specifiable outputs and resulting fixture wattages
- 2 SDCM color consistency
- End cap design eliminates visible diffuser seams/gaps

See Certification Specifications

CONTROLS

NX DISTRIBUTED™ INTELLIGENCE SpectraSync™

RELATED PRODUCTS

2L-P-D 3L-P-D 6L-P-D

SERVICE PROGRAMS

QS

SPECIFICATIONS

CONSTRUCTION

- Housing constructed from extruded aluminum
- End caps constructed from die cast aluminum with magnetic interface
- End caps overlap diffuser at each fixture end to elimate gaps and LED visibility

OPTICAL PERFORMANCE

- 2 SDCM color consistency, 80 or 90 CRI
- SOF: Soft diffuse acrylic lens
- REG: ½" regressed softglo lens with painted steel inserts. Output multiplier (.77)
- BWO: White blade baffle with softglo lens overlay. Output multiplier (.70)
- ASYM: Asymmetric Highly transmissive diffuse acrylic lens with linear prisms
- BAT: "Batwing" distribution created created from highly transmissive diffuse acrylic lens with linear prisms
- DRP: 1/2" protruding soft diffuse "drop" lens

INSTALLATION

- Suspension required at every row joint. 3/64" diameter field-adjustable aircraft cables, ships separately
- Low profile cable gripper limits visibility while providing maximum horizontal balance adjustment
- Pendant locations at ends of rows (or individual fixtures) are 1/2" from fixture ends
- Pendant attachment allows for horizontal adjustment to "fine-tune" side-to-side leveling
- Illuminated corners available in 90°, 120°, 135°. One piece construction, ready to install, with diffusers that match adjoining fixtures. Corner system connectors must be used to form patterns. The length of each outside or inside illuminated corner is 12"

INSTALLATION (CONTINUED)

- Square and Triangle non-illuminated connectors match fixture width for continuous look
- Fixture weight: 3lbs/ft

ELECTRICAL

- Variable Intensity (VI) technology allows precise specification of fixture output/ wattage. Fixture will be programmed and labeled to specification. Indirect and direct hemispheres can be independently specified
- LED boards and drivers can be accessed and removed from fixture, while installed
- Entire LED module can be removed and replaced
- 1C (1 Circuit) Fixture wired for a single circuit
- Non-feed: 2" diameter canopy covers provided (unless 5" non-feed cover is specified)
- Feed Cord: 4-wire, 7 amps max; 5-wire, 5 amps max
- Emergency Battery: 10W battery powered driver. Provides a minimum of 90 minutes of emergency lighting. Inverter-Compatible. Provided by others. Available in 4'+' fixtures

CONTROLS

- Sensors install between diffusers
- NX Distributed Intelligence™: Supports indoor and outdoor applications, wired, wireless and hybrid networked NX lighting control deployments and enabled emerging applications, such as Hubbell Lighting's SpectraSync™ Color Tuning Technology
- SpectraSync™ Color Tuning Technology: Control your space based on the needs of the application, specific activities throughout the day and preferences of the occupants

CERTIFICATIONS

- DLC® (DesignLights Consortium) Qualified - see www.designlights.org
- CSA listed for damp location
- IBEW
- AF of L
- UL924
- This product qualifies as a "designated country construction material" per FAR 52.225-11 Buy American-Construction. Materials under Trade Agreements effective 8/14/2020. See Buy American Solutions. Contact factory for configurations including SpectraSync, NX, or sensors.

WARRANTY

- LED boards - 5 years
- LED drivers (standard) - 5 years
- LED drivers (Lutron) - 3 years
- See www.litecontrol.com for details

KEY DATA	
Lumen Range Per Foot	D: 300 - 1100
Wattage Range Per Foot	2.6-10.0
Efficacy Range (LPW)	110-118
Rated Life (Hours)	L70: >61,000 L90: >61,000

© 2021 Litecontrol a division of Hubbell Lighting, Inc. Specifications subject to change without notice.
65 Spring Street Plympton, MA 02367 / Tel 781.294.0100 / Website www.litecontrol.com

HUBBELL Lighting

LITECONTROL
making light work™

4L-P-D

MOD™ 3 LED PENDANT DIRECT

DATE: | LOCATION:

TYPE: L9 | PROJECT:

CATALOG #:

= Service Program

QS 10

Click icon for a list of Quick-Ship options

ORDERING GUIDE

9FT 7INCH CONTINIOUS RUN

Example: 4L-P-D-8-08-SOF-C1-27K-D030-D01-1C-UNV-FA1

CATALOG # 4L-P-D-9'7"

4L	P	D	9' 7"		SOF	C1
Series	**Mounting**	**Fixture Distribution**	**Row Length (In Feet)**	**Max Length In Row**	**Direct Optical Distribution**	**Finish/Color [4]**
4L MOD	**P** Pendant	**D** Direct	**__'** Enter in foot increments	**02** 2', 609mm	**SOF** Soft Diffuse Lens, Lambertian	**C1** Matte White (Default)
		AD Asymmetric Direct		**03** 3', 914mm	**REG** Regressed Diffuse Lens [1]	**C2** Textured Matte White
				04 4', 1219mm	**BWO** Blade Baffle with Overlay [1]	**C3** Light Silver
				05 5', 1524mm	**ASYM** Asymmetric Diffuse Lens [1, 2]	**C4** Machined Aluminum
				06 6', 1829mm	**BAT** Batwing Lens	**C5** Carbon Black
				08 8', 2438mm	**DRP** Drop Lens [1, 3]	**C6** Textured Camera Black
						CC Custom Color

2750T	375 LM	D01		UNV	
Color Temperature	**Direct Output/ft [6]**	**Driver**	**Circuiting**	**Voltage**	**Suspension Kit [10]**
27K 2700K [3]	**D030** 300 (min) [7]	**D01** 1% Dimming, 0-10V	**1C** 1 Circuit	**UNV** Universal Voltage (120V through 277V)	**FA1** Suspension Kit, 51"
30K 3000K	*to*	**D00** 1% Dim-to-Off, 0-10V		**347** 347 Volt [3, 9]	**FA2** Suspension Kit, 87"
35K 3500K	**D125** 1250 (max)	**D05** SpectraSync 5% Dimming, 0-10V [8]			**FA3** Suspension Kit, 219"
40K 4000K		**DS1** 1% Dimming w/ Soft Start, 0-10V			**FA4** Suspension Kit, 363"
50K 5000K [3]		**DS0** 1% Dim-to-Off w/ Soft Start, 0-10V			
27K9 2700K, 90 CRI [3]		**LEC** Hi-lume 1% Ecosystem LED Driver			
30K9 3000K, 90 CRI		**DALI** DALI [3]			
35K9 3500K, 90 CRI		**DALIP** Powered by DALI (2.0) [3]			
40K9 4000K, 90 CRI		**NDM** Non-Dimming			
50K9 5000K, 90 CRI [3]					
2230TD 2200K-3000K SpectraSync™ Dim-to-Warm [5]					
2750T 2700K-5000K SpectraSync™ Tunable White [5]					
2765T 2700K-6500K SpectraSync™ Tunable White [5]					

OPTIONAL

Nightlight	Emergency	Thru-wiring	Patterns [3, 13]	T-Bar Clips [14]
NL Nightlight Circuit Required. Enter quantity. 2NL = 2 nightlight circuits/row	**EF** 10W Emergency Battery Pack. Enter quantity. 2EF = 2 emergency batteries/row. [11]	**W1** No Thru Wire	**C90L** Illuminated 90° Corner	**CB1** T-bar clip - 15/16"
		W2 Provide Normal and Emergency/ Nightlight Thru Wiring [12]	**C120L** Illuminated 120° Corner	**CB2** T-bar clip - 9/16"
		W3 Provide Normal Thru Wiring Only	**C135L** Illuminated 135° Corner	**CB3** T-bar clip - 9/16" SS

Control Options [3]

NX Standalone

NXS NX, PIR BT Occupancy/Daylight Sensor, Slide Mount [15, 16, 17]

NX Networked – Wired

NXE NX, Dual SmartPORTs [15, 16]

NXES NX, PIR BT Occupancy/Daylight Sensor, Slide Mount, Dual SmartPORTs [15, 16]

NX Networked – Wireless

NXSW NX Wireless, PIR BT Occupancy/Daylight Sensor [15, 16, 17]

NXWE NX Wireless Wireless Enabled [15, 16]

NX Networked – Wired/Wireless

NXSWD NX Wireless, PIR BT Occupancy/Daylight Sensor, Dual SmartPORTs [15, 16, 17]

NXWD NX Wireless, Dual SmartPORTs [15, 16]

Sensors

SD1 Daylight Sensor Required. Enter quantity. 2SD1 = 2 daylight sensors/row

SO1 Occupancy Sensor Required. Enter quantity. 2SO1 = 2 occupancy sensors/row

Notes:

1 Not Available with Patterns.
2 Must be ordered with AD.
3 Additional lead time may be applicable. Contact factory.
4 Visit www.litecontrol.com/finishes for details.
5 Must be ordered with D05 Driver option; excludes 2' lengths and patterns.
6 Specifiable in 50 lumen increments. Reference the Performance Data Table for full performance offering and exceptions.
7 D030 not available in 2'
8 Must be ordered with 2230TD, 2750T or 2765T Option
9 Excludes Emergency Battery Pack 'EF' Option. Excludes DALI, DALIP and Lutron (LEC) Dimming Drivers
10 Add suffix /V to replace all 2" non-feed canopy covers with 5" canopy covers. FA1/V = 51" suspension kit w/ 5" canopies; canopies and feed cord are supplied in white regardless of fixture color unless otherwise specified.
11 EF - 10W battery powered driver. Provides a minimum of 90 minutes of emergency lighting. Inverter-Compatible. Provided by others.
12 Only applicable when specified with Emergency/Nightlight.
13 Contact Factory for pattern configurations. Approval drawings required.
14 Includes Luminaire Canopy Box.

NX In-Fixture Control Options:

15 Not available for row mounting. Only available with 0-10V Driver options. Contact factory for Length restrictions.
16 Refer to NX Integrated Controls Reference Table for Functionality of Options.
17 NX Sensors with Bluetooth, BLE, provides remote commission only.

© 2021 Litecontrol, a division of Hubbell Lighting, Inc. Specifications subject to change without notice.
65 Spring Street Plympton, MA 02367 / Tel 781.294.0100 / Website www.litecontrol.com

HUBBELL Lighting

DATE: | LOCATION:
TYPE: L9 | PROJECT:
CATALOG #:

4L-P-D

MOD™ 3 LED PENDANT DIRECT

CONTROLS

NX DISTRIBUTED™ INTELLIGENCE

NX Distributed Intelligence™ Lighting Controls:

Supports both indoor and outdoor applications in a variety of deployment options- wired, wireless, hybrid.
Integrates with and enables a wide array of luminaires including those with SpectraSync Color Tuning Technology.

NX INTEGRATED CONTROLS REFERENCE								
NX Option	Sensor	Networkable	Scheduling	Occupancy	Daylight Harvesting	0–10V Dimming	On/off Control	Bluetooth® App Programming
NX Standalone								
NXS	NXSMP-SMI	No	Yes	Yes	Yes	Yes	Yes	Yes
NX Networked – Wired								
NXE	N/A	Yes	Yes	No	No	Yes	Yes	Requires NXBTC/R [1]
NXES	NXSMP-SMI	Yes	Yes	Yes	Yes	Yes	Yes	Yes
NX Networked – Wireless								
NXSW	NXSMP-SMI	Yes	Yes	Yes	Yes	Yes	Yes	Yes
NXWE [2]	N/A	Yes	Yes	No	No	Yes	Yes	No[3]
NX Networked – Wired/Wireless								
NXSWD	NXSMP-SMI	Yes	Yes	Yes	Yes	Yes	Yes	Yes
NXWD	N/A	Yes	Yes	No	No	Yes	Yes	Requires NXBTC/R [1,3]

1 NXBTC/R needs to be plugged into an available NX SmartPort™ on the fixture network
2 Programming via App requires factory assistance
3 To program NXWE option, need to consult factory. If connected to an area controller, programming can be done from that

SpectraSync™ Color Tuning Technology:

Control your space based on the needs of the application, specific activities throughout the day and preferences of the occupants with distinct SpectraSync™ Color Tuning Technologies.

SpectraSync™ Color Tuning Technology

SPECTRASYNC COLOR TUNING TECHNOLOGY		
Mode	Kelvin Range	Description
Dim to Warm	2200K-3000K	Mimics the familiar warming effect that occurs with traditional incandescent sources as they are dimmed
Tunable White	2700K-5000K 2700K-6500K	Offers users the ability to tailor CCT to their personal preference, enhancing task visibility, material and colors or the aesthetics of the space
Scheduled White	2700K-5000K 2700K-6500K	Mimics the rhythm of natural light or follows an alternative user-defined schedule throughout the day, enhancing an occupant's mood and well-being

SpectraSync Tunable White

Available in two options: 2750T (2700K–5000K) or 2765T (2700K–6500K).
Requires two 0–10V controllers, one for intensity and one for CCT.
Minimum 5% dimming.

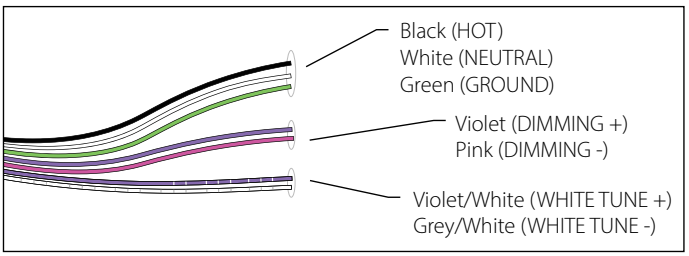

SpectraSync Tunable White luminaires are provided with two 0–10V circuits. The violet and pink circuit is for wiring to any qualified 0–10V controller for dimming. The violet/white and grey/white circuit is for wiring to any qualified 0–10V controller for Tunable White CCT control.

Controller Manufacturer Data

SpectraSync Tunable White was designed to be used with sinking style dimmers (provided by others) and is compatible with:

- Hubbell Control Solutions (HCS): NX Distributed Intelligence™ Room Controllers (NXRC) and In-fixture Controllers (NXFM)
- Lutron: DVTV, DVSTV, and NFTV dimmers
- Wattstopper: ADF120277 and CD4BL (Titan) dimmers

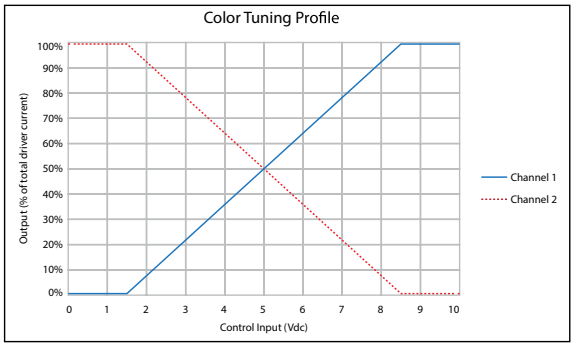

NX Design & Application Guide
NX Brochure
SpectraSync
NX Solutions Guide

© 2021 Litecontrol, a division of Hubbell Lighting, Inc. Specifications subject to change without notice.
65 Spring Street Plympton, MA 02367 / Tel 781.294.0100 / Website www.litecontrol.com

DATE: LOCATION:
TYPE: L9 PROJECT:
CATALOG #:

4L-P-D

MOD™ 3 LED PENDANT DIRECT

PERFORMANCE DATA TABLE

The table below shows the delivered lumens for the various lumen outputs. Use this chart in connection with the output multiplier capability to deliver any output required.

Nomenclature	Lumens/Ft	W/Ft	Efficacy
Downlight			
D030 (min)	300	2.6	118
D035	350	3.0	118
D040	400	3.4	118
D045	450	3.8	118
D050	500	4.2	118
D055	550	4.7	117
D060	600	5.1	117
D065	650	5.6	116
D070	700	6.1	116
D075	750	6.5	115
D080	800	7.0	115
D085	850	7.5	113
D090	900	7.9	113
D095	950	8.5	112
D100	1000	9.0	112
D105	1050	9.4	111
D110 (max)	1100	10.0	110

(wattage may vary up to 5% from published)

Output Restrictions

Driver options listed below are not available for the output and length as shown.

Restrictions - Direct		Output LPA						
		300	350	400	450	500	950	1000
Length (feet)	2	LEC, DALI, 347V	LEC, DALI, 347V	DALI, 347V	DALI, 347V	DALI, 347V	LEC	LEC
	3	DALI, 347V	DALI, 347V				LEC	LEC
	4						LEC	LEC
	5						LEC	LEC
	6						LEC	LEC
	8						LEC	LEC

Output Multiplier Table

Photometrics for the 4L are published here at a nominal 3500K temperature. This table may be used to approximate the lumen values at different Kelvin temperatures. Power consumption would stay the same.

Option	2700K	3000K	3500K	4000K	5000K	2700K 90 CRI	3000K 90 CRI	3500K 90 CRI	4000K 90 CRI	5000K 90 CRI
SOF	0.95	0.98	1.00	1.03	1.05	0.83	0.85	0.88	0.90	0.93
REG	0.73	0.75	0.77	0.79	0.81	0.64	0.65	0.68	0.69	0.72
BWO	0.67	0.69	0.70	0.72	0.76	0.63	0.53	0.47	0.42	0.39
ASYM	0.95	0.98	1.00	1.03	1.05	0.83	0.85	0.88	0.90	0.93
BAT	0.95	0.98	1.00	1.03	1.05	0.83	0.85	0.88	0.90	0.93
DRP	0.95	0.98	1.00	1.03	1.05	0.83	0.85	0.88	0.90	0.93
LPAD	0.86	0.88	0.90	0.93	0.95	0.75	0.77	0.79	0.81	0.84

© 2021 Litecontrol, a division of Hubbell Lighting, Inc. Specifications subject to change without notice.
65 Spring Street Plympton, MA 02367 / Tel 781.294.0100 / Website www.litecontrol.com

LITECONTROL
making light work™

DATE:	LOCATION:
TYPE: L9	PROJECT:
CATALOG #:	

4L-P-D

MOD™ 3 LED PENDANT DIRECT

DIMENSIONS

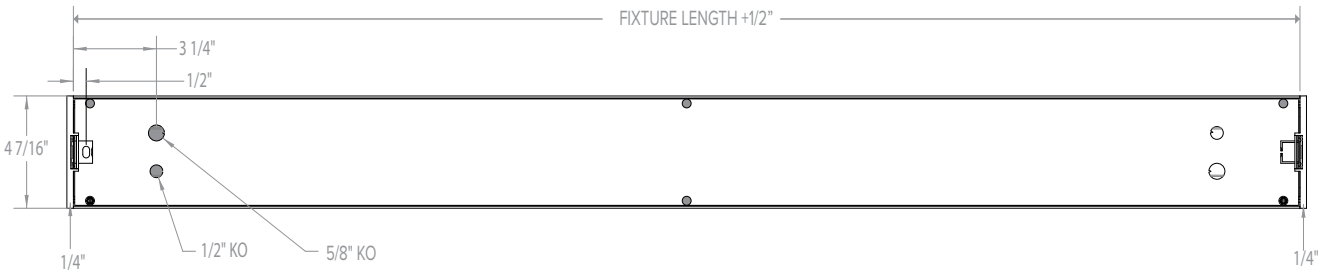

INDIVIDUAL MOUNTING

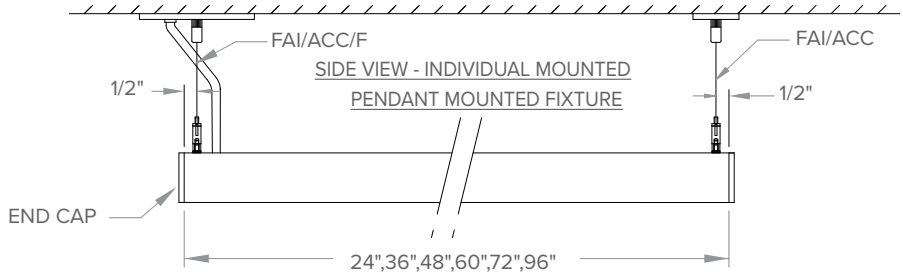

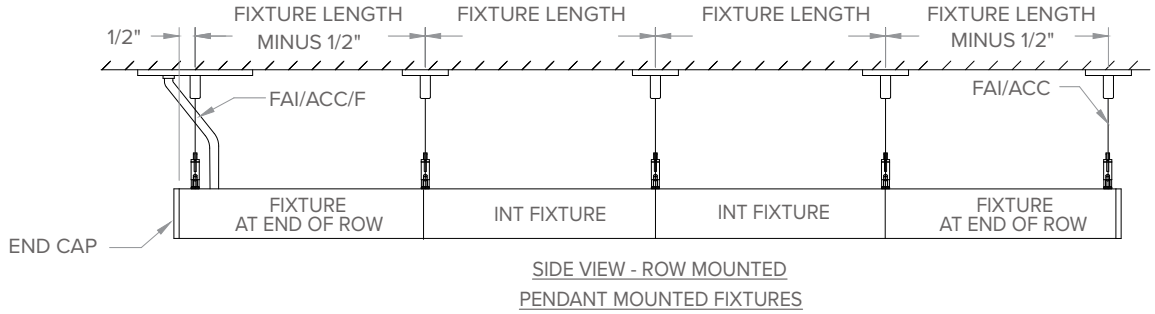

ROW MOUNTING

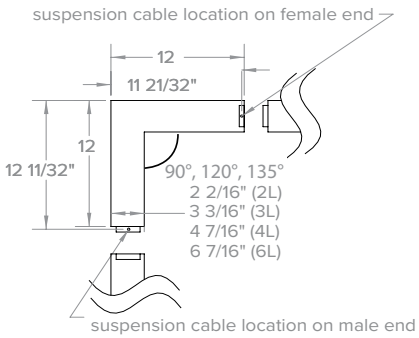

PATTERNS

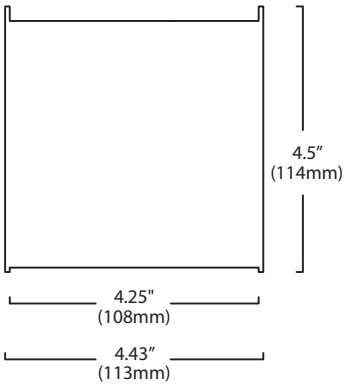

END CAP VIEW

© 2021 Litecontrol, a division of Hubbell Lighting, Inc. Specifications subject to change without notice.
65 Spring Street Plympton, MA 02367 / Tel 781.294.0100 / Website www.litecontrol.com

HUBBELL Lighting

LITECONTROL
making light work™

DATE:	LOCATION:
TYPE: L12	PROJECT:
CATALOG #:	

4L-P-D

MOD™ 3 LED PENDANT DIRECT

MODX

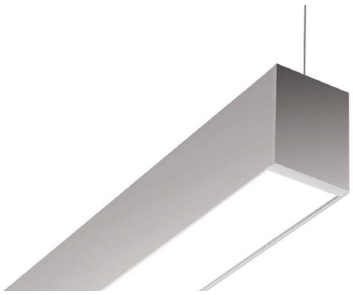

FEATURES

- Variable Intensity technology provides a range of specifiable outputs and resulting fixture wattages
- 2 SDCM color consistency
- End cap design eliminates visible diffuser seams/gaps

See Certification Specifications

CONTROLS

NX DISTRIBUTED INTELLIGENCE™ SpectraSync™

RELATED PRODUCTS

2L-P-D 3L-P-D 6L-P-D

SERVICE PROGRAMS

QS

SPECIFICATIONS

CONSTRUCTION

- Housing constructed from extruded aluminum
- End caps constructed from die cast aluminum with magnetic interface
- End caps overlap diffuser at each fixture end to elimate gaps and LED visibility

OPTICAL PERFORMANCE

- 2 SDCM color consistency, 80 or 90 CRI
- SOF: Soft diffuse acrylic lens
- REG: ½" regressed softglo lens with painted steel inserts. Output multiplier (.77)
- BWO: White blade baffle with softglo lens overlay. Output multiplier (.70)
- ASYM: Asymmetric Highly transmissive diffuse acrylic lens with linear prisms
- BAT: "Batwing" distribution created created from highly transmissive diffuse acrylic lens with linear prisms
- DRP: 1/2" protruding soft diffuse "drop" lens

INSTALLATION

- Suspension required at every row joint. 3/64" diameter field-adjustable aircraft cables, ships separately
- Low profile cable gripper limits visibility while providing maximum horizontal balance adjustment
- Pendant locations at ends of rows (or individual fixtures) are 1/2" from fixture ends
- Pendant attachment allows for horizontal adjustment to "fine-tune" side-to-side leveling
- Illuminated corners available in 90°, 120°, 135°. One piece construction, ready to install, with diffusers that match adjoining fixtures. Corner system connectors must be used to form patterns. The length of each outside or inside illuminated corner is 12"

INSTALLATION (CONTINUED)

- Square and Triangle non-illuminated connectors match fixture width for continuous look
- Fixture weight: 3lbs/ft

ELECTRICAL

- Variable Intensity (VI) technology allows precise specification of fixture output/ wattage. Fixture will be programmed and labeled to specification. Indirect and direct hemispheres can be independently specified
- LED boards and drivers can be accessed and removed from fixture, while installed
- Entire LED module can be removed and replaced
- 1C (1 Circuit) Fixture wired for a single circuit
- Non-feed: 2" diameter canopy covers provided (unless 5" non-feed cover is specified)
- Feed Cord: 4-wire, 7 amps max; 5-wire, 5 amps max
- Emergency Battery: 10W battery powered driver. Provides a minimum of 90 minutes of emergency lighting. Inverter-Compatible. Provided by others. Available in 4'+' fixtures

CONTROLS

- Sensors install between diffusers
- NX Distributed Intelligence™: Supports indoor and outdoor applications, wired, wireless and hybrid networked NX lighting control deployments and enabled emerging applications, such as Hubbell Lighting's SpectraSync™ Color Tuning Technology
- SpectraSync™ Color Tuning Technology: Control your space based on the needs of the application, specific activities throughout the day and preferences of the occupants

CERTIFICATIONS

- DLC® (DesignLights Consortium) Qualified - see www.designlights.org
- CSA listed for damp location
- IBEW
- AF of L
- UL924
- This product qualifies as a "designated country construction material" per FAR 52.225-11 Buy American-Construction. Materials under Trade Agreements effective 8/14/2020. See Buy American Solutions. Contact factory for configurations including SpectraSync, NX, or sensors.

WARRANTY

- LED boards - 5 years
- LED drivers (standard) - 5 years
- LED drivers (Lutron) - 3 years
- See www.litecontrol.com for details

KEY DATA	
Lumen Range Per Foot	D: 300 - 1100
Wattage Range Per Foot	2.6-10.0
Efficacy Range (LPW)	110-118
Rated Life (Hours)	L70: >61,000 L90: >61,000

© 2021 Litecontrol a division of Hubbell Lighting, Inc. Specifications subject to change without notice.
65 Spring Street Plympton, MA 02367 / Tel 781.294.0100 / Website www.litecontrol.com

HUBBELL Lighting

LITECONTROL
making light work™

4L-P-D

MOD™ 3 LED PENDANT DIRECT

DATE: | LOCATION:

TYPE: L12 | PROJECT:

CATALOG #:

= Service Program

QS 10

Click icon for a list of Quick-Ship options

ORDERING GUIDE

Example: 4L-P-D-8-08-SOF-C1-27K-D030-D01-1C-UNV-FA1

CATALOG # 4L-P-D-12

4L	P	D	12		SOF	C1
Series	**Mounting**	**Fixture Distribution**	**Row Length (In Feet)**	**Max Length In Row**	**Direct Optical Distribution**	**Finish/Color [4]**
4L MOD	**P** Pendant	**D** Direct	**__'** Enter in foot increments	**02** 2', 609mm	**SOF** Soft Diffuse Lens, Lambertian	**C1** Matte White (Default)
		AD Asymmetric Direct		**03** 3', 914mm	**REG** Regressed Diffuse Lens [1]	**C2** Textured Matte White
				04 4', 1219mm	**BWO** Blade Baffle with Overlay [1]	**C3** Light Silver
				05 5', 1524mm	**ASYM** Asymmetric Diffuse Lens [1, 2]	**C4** Machined Aluminum
				06 6', 1829mm	**BAT** Batwing Lens	**C5** Carbon Black
				08 8', 2438mm	**DRP** Drop Lens [1, 3]	**C6** Textured Camera Black
						CC Custom Color

2750T	375 LM	D01		UNV	
Color Temperature	**Direct Output/ft [6]**	**Driver**	**Circuiting**	**Voltage**	**Suspension Kit [10]**
27K 2700K [3]	**D030** 300 (min) [7]	**D01** 1% Dimming, 0-10V	**1C** 1 Circuit	**UNV** Universal Voltage (120V through 277V)	**FA1** Suspension Kit, 51"
30K 3000K	*to*	**D00** 1% Dim-to-Off, 0-10V		**347** 347 Volt [3, 9]	**FA2** Suspension Kit, 87"
35K 3500K	**D125** 1250 (max)	**D05** SpectraSync 5% Dimming, 0-10V [8]			**FA3** Suspension Kit, 219"
40K 4000K		**DS1** 1% Dimming w/ Soft Start, 0-10V			**FA4** Suspension Kit, 363"
50K 5000K [3]		**DS0** 1% Dim-to-Off w/ Soft Start, 0-10V			
27K9 2700K, 90 CRI [3]		**LEC** Hi-lume 1% Ecosystem LED Driver			
30K9 3000K, 90 CRI		**DALI** DALI [3]			
35K9 3500K, 90 CRI		**DALIP** Powered by DALI (2.0) [3]			
40K9 4000K, 90 CRI		**NDM** Non-Dimming			
50K9 5000K, 90 CRI [3]					
2230TD 2200K-3000K SpectraSync™ Dim-to-Warm [5]					
2750T 2700K-5000K SpectraSync™ Tunable White [5]					
2765T 2700K-6500K SpectraSync™ Tunable White [5]					

OPTIONAL

Nightlight	Emergency	Thru-wiring	Patterns [3, 13]	T-Bar Clips [14]
NL Nightlight Circuit Required. Enter quantity. 2NL = 2 nightlight circuits/row	**EF** 10W Emergency Battery Pack. Enter quantity. 2EF = 2 emergency batteries/row. [11]	**W1** No Thru Wire	**C90L** Illuminated 90° Corner	**CB1** T-bar clip - 15/16"
		W2 Provide Normal and Emergency/ Nightlight Thru Wiring [12]	**C120L** Illuminated 120° Corner	**CB2** T-bar clip - 9/16"
		W3 Provide Normal Thru Wiring Only	**C135L** Illuminated 135° Corner	**CB3** T-bar clip - 9/16" SS

Control Options [3]

NX Standalone

NXS NX, PIR BT Occupancy/Daylight Sensor, Slide Mount [15, 16, 17]

NX Networked – Wired

NXE NX, Dual SmartPORTs [15, 16]

NXES NX, PIR BT Occupancy/Daylight Sensor, Slide Mount, Dual SmartPORTs [15, 16]

NX Networked – Wireless

NXSW NX Wireless, PIR BT Occupancy/Daylight Sensor [15, 16, 17]

NXWE NX Wireless Wireless Enabled [15, 16]

NX Networked – Wired/Wireless

NXSWD NX Wireless, PIR BT Occupancy/Daylight Sensor, Dual SmartPORTs [15, 16, 17]

NXWD NX Wireless, Dual SmartPORTs [15, 16]

Sensors

SD1 Daylight Sensor Required. Enter quantity. 2SD1 = 2 daylight sensors/row

SO1 Occupancy Sensor Required. Enter quantity. 2SO1 = 2 occupancy sensors/row

Notes:

1 Not Available with Patterns.
2 Must be ordered with AD.
3 Additional lead time may be applicable. Contact factory.
4 Visit www.litecontrol.com/finishes for details.
5 Must be ordered with D05 Driver option; excludes 2' lengths and patterns.
6 Specifiable in 50 lumen increments. Reference the Performance Data Table for full performance offering and exceptions.
7 D030 not available in 2'
8 Must be ordered with 2230TD, 2750T or 2765T Option
9 Excludes Emergency Battery Pack 'EF' Option. Excludes DALI, DALIP and Lutron (LEC) Dimming Drivers
10 Add suffix /V to replace all 2" non-feed canopy covers with 5" canopy covers. FA1/V = 51" suspension kit w/ 5" canopies; canopies and feed cord are supplied in white regardless of fixture color unless otherwise specified.
11 EF - 10W battery powered driver. Provides a minimum of 90 minutes of emergency lighting. Inverter-Compatible. Provided by others.
12 Only applicable when specified with Emergency/Nightlight.
13 Contact Factory for pattern configurations. Approval drawings required.
14 Includes Luminaire Canopy Box.

NX In-Fixture Control Options:

15 Not available for row mounting. Only available with 0-10V Driver options. Contact factory for Length restrictions.
16 Refer to NX Integrated Controls Reference Table for Functionality of Options.
17 NX Sensors with Bluetooth, BLE, provides remote commission only.

© 2021 Litecontrol, a division of Hubbell Lighting, Inc. Specifications subject to change without notice.
65 Spring Street Plympton, MA 02367 / Tel 781.294.0100 / Website www.litecontrol.com

HUBBELL Lighting

DATE: | LOCATION:
TYPE: L12 | PROJECT:
CATALOG #:

4L-P-D

MOD™ 3 LED PENDANT DIRECT

CONTROLS

NX DISTRIBUTED™ INTELLIGENCE

NX Distributed Intelligence™ Lighting Controls:

Supports both indoor and outdoor applications in a variety of deployment options- wired, wireless, hybrid.
Integrates with and enables a wide array of luminaires including those with SpectraSync Color Tuning Technology.

NX INTEGRATED CONTROLS REFERENCE								
NX Option	Sensor	Networkable	Scheduling	Occupancy	Daylight Harvesting	0–10V Dimming	On/off Control	Bluetooth® App Programming
NX Standalone								
NXS	NXSMP-SMI	No	Yes	Yes	Yes	Yes	Yes	Yes
NX Networked – Wired								
NXE	N/A	Yes	Yes	No	No	Yes	Yes	Requires NXBTC/R [1]
NXES	NXSMP-SMI	Yes	Yes	Yes	Yes	Yes	Yes	Yes
NX Networked – Wireless								
NXSW	NXSMP-SMI	Yes	Yes	Yes	Yes	Yes	Yes	Yes
NXWE [2]	N/A	Yes	Yes	No	No	Yes	Yes	No[3]
NX Networked – Wired/Wireless								
NXSWD	NXSMP-SMI	Yes	Yes	Yes	Yes	Yes	Yes	Yes
NXWD	N/A	Yes	Yes	No	No	Yes	Yes	Requires NXBTC/R [1,3]

1 NXBTC/R needs to be plugged into an available NX SmartPort™ on the fixture network
2 Programming via App requires factory assistance
3 To program NXWE option, need to consult factory. If connected to an area controller, programming can be done from that

SpectraSync™ Color Tuning Technology:

Control your space based on the needs of the application, specific activities throughout the day and preferences of the occupants with distinct SpectraSync™ Color Tuning Technologies.

SpectraSync™ Color Tuning Technology

SPECTRASYNC COLOR TUNING TECHNOLOGY		
Mode	Kelvin Range	Description
Dim to Warm	2200K-3000K	Mimics the familiar warming effect that occurs with traditional incandescent sources as they are dimmed
Tunable White	2700K-5000K 2700K-6500K	Offers users the ability to tailor CCT to their personal preference, enhancing task visibility, material and colors or the aesthetics of the space
Scheduled White	2700K-5000K 2700K-6500K	Mimics the rhythm of natural light or follows an alternative user-defined schedule throughout the day, enhancing an occupant's mood and well-being

SpectraSync Tunable White

Available in two options: 2750T (2700K–5000K) or 2765T (2700K–6500K).
Requires two 0–10V controllers, one for intensity and one for CCT.
Minimum 5% dimming.

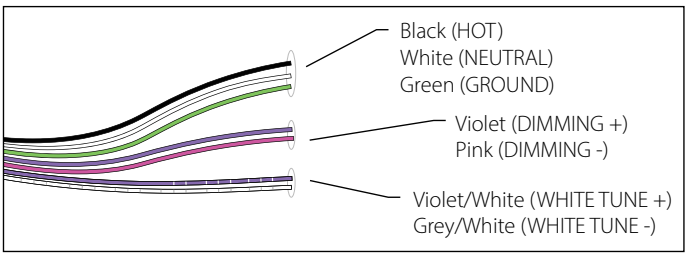

SpectraSync Tunable White luminaires are provided with two 0–10V circuits. The violet and pink circuit is for wiring to any qualified 0–10V controller for dimming. The violet/white and grey/white circuit is for wiring to any qualified 0–10V controller for Tunable White CCT control.

Controller Manufacturer Data

SpectraSync Tunable White was designed to be used with sinking style dimmers (provided by others) and is compatible with:

- Hubbell Control Solutions (HCS): NX Distributed Intelligence™ Room Controllers (NXRC) and In-fixture Controllers (NXFM)
- Lutron: DVTV, DVSTV, and NFTV dimmers
- Wattstopper: ADF120277 and CD4BL (Titan) dimmers

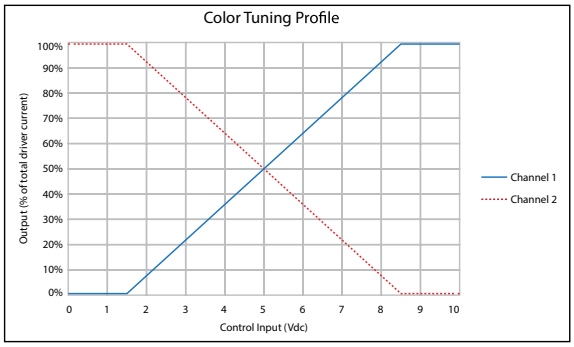

NX Design & Application Guide
NX Brochure
SpectraSync
NX Solutions Guide

© 2021 Litecontrol, a division of Hubbell Lighting, Inc. Specifications subject to change without notice.
65 Spring Street Plympton, MA 02367 / Tel 781.294.0100 / Website www.litecontrol.com

DATE: | LOCATION:
TYPE: L12 | PROJECT:
CATALOG #:

4L-P-D

MOD™ 3 LED PENDANT DIRECT

PERFORMANCE DATA TABLE

The table below shows the delivered lumens for the various lumen outputs. Use this chart in connection with the output multiplier capability to deliver any output required.

Nomenclature	Lumens/Ft	W/Ft	Efficacy
Downlight			
D030 (min)	300	2.6	118
D035	350	3.0	118
D040	400	3.4	118
D045	450	3.8	118
D050	500	4.2	118
D055	550	4.7	117
D060	600	5.1	117
D065	650	5.6	116
D070	700	6.1	116
D075	750	6.5	115
D080	800	7.0	115
D085	850	7.5	113
D090	900	7.9	113
D095	950	8.5	112
D100	1000	9.0	112
D105	1050	9.4	111
D110 (max)	1100	10.0	110

(wattage may vary up to 5% from published)

Output Restrictions

Driver options listed below are not available for the output and length as shown.

Restrictions - Direct		Output LPA						
		300	350	400	450	500	950	1000
Length (feet)	2	LEC, DALI, 347V	LEC, DALI, 347V	DALI, 347V	DALI, 347V	DALI, 347V	LEC	LEC
	3	DALI, 347V	DALI, 347V				LEC	LEC
	4						LEC	LEC
	5						LEC	LEC
	6						LEC	LEC
	8						LEC	LEC

Output Multiplier Table

Photometrics for the 4L are published here at a nominal 3500K temperature. This table may be used to approximate the lumen values at different Kelvin temperatures. Power consumption would stay the same.

Option	2700K	3000K	3500K	4000K	5000K	2700K 90 CRI	3000K 90 CRI	3500K 90 CRI	4000K 90 CRI	5000K 90 CRI
SOF	0.95	0.98	1.00	1.03	1.05	0.83	0.85	0.88	0.90	0.93
REG	0.73	0.75	0.77	0.79	0.81	0.64	0.65	0.68	0.69	0.72
BWO	0.67	0.69	0.70	0.72	0.76	0.63	0.53	0.47	0.42	0.39
ASYM	0.95	0.98	1.00	1.03	1.05	0.83	0.85	0.88	0.90	0.93
BAT	0.95	0.98	1.00	1.03	1.05	0.83	0.85	0.88	0.90	0.93
DRP	0.95	0.98	1.00	1.03	1.05	0.83	0.85	0.88	0.90	0.93
LPAD	0.86	0.88	0.90	0.93	0.95	0.75	0.77	0.79	0.81	0.84

© 2021 Litecontrol, a division of Hubbell Lighting, Inc. Specifications subject to change without notice.
65 Spring Street Plympton, MA 02367 / Tel 781.294.0100 / Website www.litecontrol.com

LITECONTROL
making light work™

DATE:	LOCATION:
TYPE: L12	PROJECT:
CATALOG #:	

4L-P-D

MOD™ 3 LED PENDANT DIRECT

DIMENSIONS

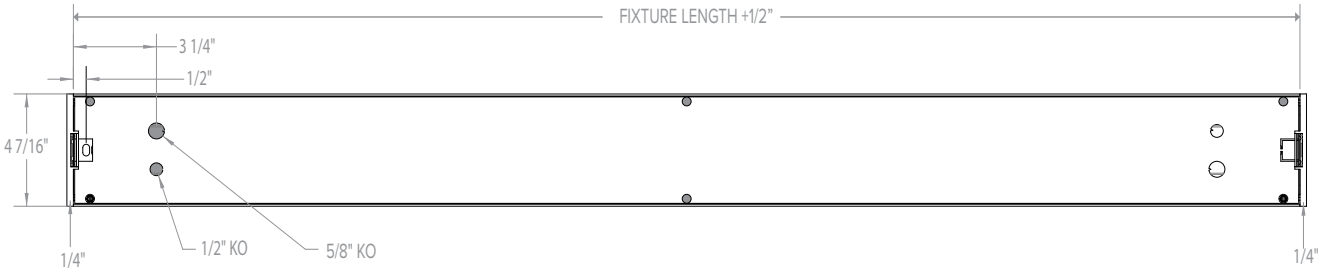

INDIVIDUAL MOUNTING

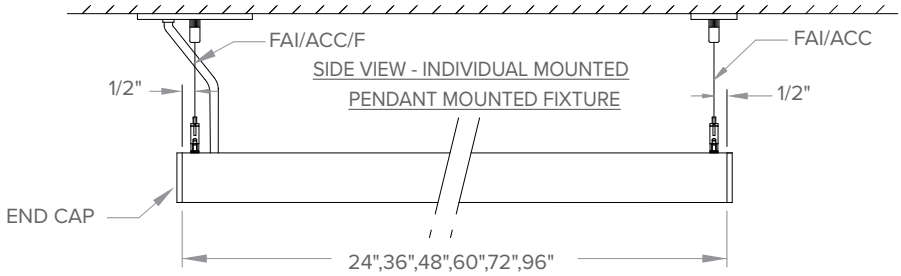

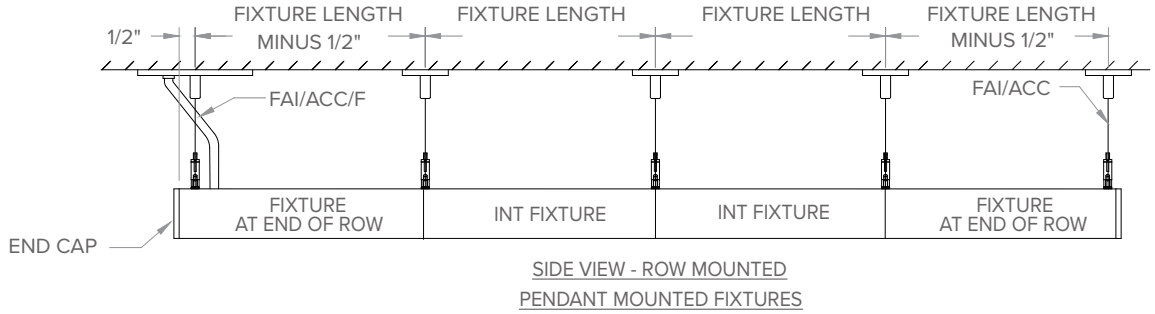

ROW MOUNTING

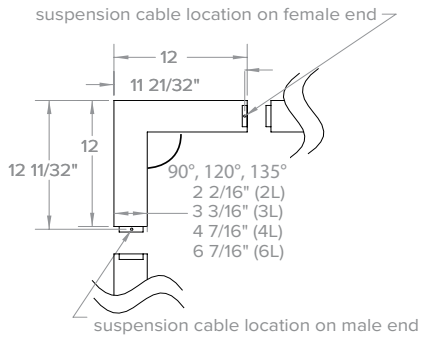

PATTERNS

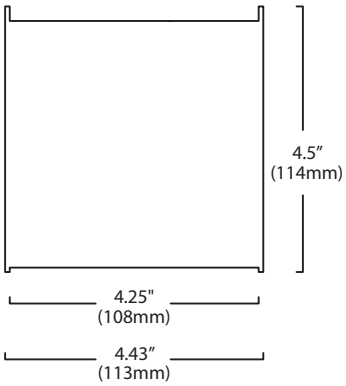

END CAP VIEW

© 2021 Litecontrol, a division of Hubbell Lighting, Inc. Specifications subject to change without notice.

65 Spring Street Plympton, MA 02367 / Tel 781.294.0100 / Website www.litecontrol.com

HUBBELL Lighting

LITECONTROL
making light work™

DATE:	LOCATION:
TYPE: L12R	PROJECT:
CATALOG #:	

6L-R-D

MOD™ 6 LED RECESSED DIRECT

MODX

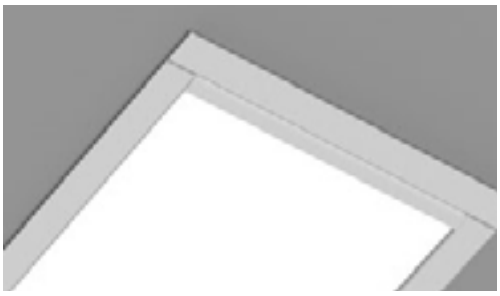

FEATURES

- Variable Intensity technology provides a range of specifiable outputs and resulting fixture wattages
- 2 SDCM color consistency
- End cap design eliminates visible diffuser seams/gaps

See Certification Specifications

CONTROLS

NX DISTRIBUTED INTELLIGENCE™ SpectraSync™

RELATED PRODUCTS

2L-R-D 3L-R-D 4L-R-D

SERVICE PROGRAMS

QS

SPECIFICATIONS

CONSTRUCTION

- Housing contructed from die-formed and welded steel with wiring knockouts in top
- End caps constructed from die-formed steel. Installs from below via magnetic interface
- End caps overlap diffuser at each fixture end to elimate gaps and LED visibility

OPTICAL PERFORMANCE

- 2 SDCM color consistency, 80 or 90 CRI
- SOF: Soft diffuse acrylic lens
- REG: ½" regressed softglo lens with painted steel inserts. Output multiplier (.77)
- BWO: White blade baffle with softglo lens overlay. Output multiplier (.70)
- BAT: "Batwing" distribution created created from highly transmissive diffuse acrylic lens with linear prisms

INSTALLATION

- PT Mounting: Continuous spackle trim with beaded edge welded to housing. Spackle trim allows plaster coat up to fixture edge for clean ceiling appearance
- LG/NG/SS Mounting: Side rails provide continuous mounting, lateral spacing between T-bars and allows clearance for T-bar supporting wire. For Tegular grid mount, fixture will sit level with the T-bar
- DW Mounting: Side rails allow installation into drywall slot. Visible flange is located on all 4 sides of fixture

INSTALLATION (CONTINUED)

- Illuminated corners available in 90°, 120°, 135°. One piece construction, ready to install, with diffusers that match adjoining fixtures. Corner system connectors must be used to form patterns. The length of each outside or inside illuminated corner is 12"
- Fixture weight: 3lbs/ft

ELECTRICAL

- Variable Intensity (VI) technology allows precise specification of fixture output/ wattage. Fixture will be programmed and labeled to specification. Indirect and direct hemispheres can be independently specified
- LED boards and drivers can be accessed and removed from fixture, while installed
- Entire LED module can be removed and replaced
- 1C (1 Circuit) Fixture wired for a single circuit
- Emergency Battery: 10W battery powered driver. Provides a minimum of 90 minutes of emergency lighting. Inverter-Compatible. Provided by others. Available in 4'+' fixtures

CONTROLS

- Sensors install between diffusers
- NX Distributed Intelligence™: Supports indoor and outdoor applications, wired, wireless and hybrid networked NX lighting control deployments and enabled emerging applications, such as Hubbell Lighting's SpectraSync™ Color Tuning Technology
- SpectraSync™ Color Tuning Technology: Control your space based on the needs of the application, specific activities throughout the day and preferences of the occupants

CERTIFICATIONS

- DLC® (DesignLights Consortium) Qualified - see www.designlights.org
- CSA listed for damp location
- IBEW
- AF of L
- UL924
- This product qualifies as a "designated country construction material" per FAR 52.225-11 Buy American-Construction. Materials under Trade Agreements effective 8/14/2020. See Buy American Solutions. Contact factory for configurations including SpectraSync, NX, or sensors.

WARRANTY

- LED boards - 5 years
- LED drivers (standard) - 5 years
- LED drivers (Lutron) - 3 years
- See www.litecontrol.com for details

KEY DATA	
Lumen Range Per Foot	D: 300–1100
Wattage Range Per Foot	2.6–10.0
Efficacy Range (LPW)	110–118
Rated Life (Hours)	L70: >61,000 L90: >61,000

© 2021 Litecontrol a division of Hubbell Lighting, Inc. Specifications subject to change without notice.
65 Spring Street Plympton, MA 02367 / Tel 781.294.0100 / Website www.litecontrol.com

HUBBELL Lighting

LITECONTROL
making light work™

6L-R-D

MOD™ 6 LED RECESSED DIRECT

DATE: | LOCATION:

TYPE: L12R | PROJECT:

CATALOG #:

= Service Program

QS 10

Click icon for a list of Quick-Ship options

ORDERING GUIDE

12FT CONTINIOUS RUN

Example: 6L-DW-D-8-.3-08-SOF-C1-27K-D030-D01-1C-UNV

CATALOG # 6L-R-D-12

6L	GRID	D	12			SOF
Series	**Ceiling Type** [1]	**Fixture Distribution**	**Row Length (In Feet)**	**Row Length Adder** [2]	**Max Length in Row**	**Direct Optical Distribution**
6L MOD	**DW** Drywall	**D** Direct	**__'** Enter in foot increments	**.3** Row length +3"	**02** 2', 609 mm	**SOF** Soft Diffuse Lens, Lambertian
	PT Drywall with plaster trim (trimless finish)			**.6** Row length +6"	**03** 3', 914 mm	**REG** Regressed Diffuse Lens [3]
	LG 15/16 Grid			**.9** Row length +9"	**04** 4', 1219 mm	**BWO** Blade Baffle with Overlay [3]
	NG 9/16 Grid			Measured in inches	**05** 5', 1524 mm	**BAT** Batwing Lens
	SS 9/16 Screw Slot				**06** 6', 1829 mm	
					08 8', 2438 mm	

C1	2750T	375 LM	D01		UNV
Finish/Color [4]	**Color Temperature**	**Direct Output/ft** [7]	**Driver**	**Circuiting**	**Voltage**
C1 Matte White (Default)	**27K** 2700K [5]	**D030** 300 (min) [8]	**D01** 1% Dimming, 0-10V	**1C** 1 Circuit	**UNV** Universal Voltage (120V through 277V)
C2 Textured Matte White	**30K** 3000K	to	**D00** 1% Dim-to-Off, 0-10V		**347** 347 Volt [5, 10]
C3 Light Silver	**35K** 3500K	**D125** 1250 (max)	**D05** SpectraSync 5% Dimming, 0-10V [9]		
C4 Machined Aluminum	**40K** 4000K		**DS1** 1% Dimming w/ Soft Start, 0-10V		
C5 Carbon Black	**50K** 5000K [5]		**DS0** 1% Dim-to-Off w/ Soft Start, 0-10V		
C6 Textured Camera Black	**27K9** 2700K, 90 CRI [5]		**LEC** Hi-lume 1% Ecosystem LED Driver		
CC Custom Color	**30K9** 3000K, 90 CRI		**DALI** DALI [5]		
	35K9 3500K, 90 CRI		**DALIP** Powered by DALI (2.0) [5]		
	40K9 4000K, 90 CRI		**NDM** Non-Dimming		
	50K9 5000K, 90 CRI [5]				
	2230TD 2200K-3000K SpectraSync™ Dim-to-Warm [6]				
	2750T 2700K-5000K SpectraSync™ Tunable White [6]				
	2765T 2700K-6500K SpectraSync™ Tunable White [6]				

OPTIONAL

Nightlight	Emergency	Thru-wiring	Patterns [5, 13]	Chicago Enviromental Air Modification
NL Nightlight Circuit Required. Enter quantity. 2NL = 2 nightlight circuits/row	**EF** 10W Emergency Battery Pack. Enter quantity. 2EF = 2 emergency batteries/row. [11]	**W1** No Thru Wire	**C90L** Illuminated 90° Corner	**CCEA** Chicago Environmental Air Modification
		W2 Provide Normal and Emergency/ Nightlight Thru Wiring [12]	**C120L** Illuminated 120° Corner	
		W3 Provide Normal Thru Wiring Only	**C135L** Illuminated 135° Corner	

Control Options [5]

NX Standalone

NXS NX, PIR BT Occupancy/Daylight Sensor, Slide Mount [14, 15, 16]

NX Networked – Wired

NXE NX, Dual SmartPORTs [14, 15]

NXES NX, PIR BT Occupancy/Daylight Sensor, Slide Mount, Dual SmartPORTs [14, 15]

NX Networked – Wireless

NXSW NX Wireless, PIR BT Occupancy/Daylight Sensor [14, 15, 16]

NXWE NX Wireless Wireless Enabled [14, 15]

NX Networked – Wired/Wireless

NXSWD NX Wireless, PIR BT Occupancy/Daylight Sensor, Dual SmartPORTs [14, 15, 16]

NXWD NX Wireless, Dual SmartPORTs [14, 15]

Sensors

SD1 Daylight Sensor Required. Enter quantity. 2SD1 = 2 daylight sensors/row

SO1 Occupancy Sensor Required. Enter quantity. 2SO1 = 2 occupancy sensors/row

SZ1 Zigbee Radio Module Required. Enter quantity. 2SZ1=2 radio modules/row. Radio controls up to 10 drivers. Must be ordered with D00.

Notes:

1 Ceiling type can not be retrofitted in the field.
2 Excludes individual grid mounts
3 Not Available with Patterns.
4 Visit www.litecontrol.com/finishes for details.
5 Additional lead time may be applicable. Contact factory.
6 Must be ordered with D05 Driver option; excludes 2' lengths and patterns.
7 Specifiable in 50 lumen increments. Reference the Performance Data Table for full performance offering and exceptions.
8 D030 not available in 2'
9 Must be ordered with 2230TD, 2750T or 2765T Option
10 Excludes Emergency Battery Pack 'EF' Option. Excludes DALI, DALIP and Lutron (LEC) Dimming Drivers
11 EF - 10W battery powered driver. Provides a minimum of 90 minutes of emergency lighting. Inverter-Compatible. Provided by others.
12 Only applicable when specified with Emergency/Nightlight.
13 Contact Factory for pattern configurations. Approval drawings required.

NX In-Fixture Control Options:

14 Not available for row mounting. Only available with 0-10V Driver options. Contact factory for Length restrictions.
15 Refer to NX Integrated Controls Reference Table for Functionality of Options.
16 NX Sensors with Bluetooth, BLE, provides remote commission only.

© 2021 Litecontrol, a division of Hubbell Lighting, Inc. Specifications subject to change without notice.
65 Spring Street Plympton, MA 02367 / Tel 781.294.0100 / Website www.litecontrol.com

HUBBELL Lighting

DATE: | LOCATION:
TYPE: L12R | PROJECT:
CATALOG #:

6L-R-D

MOD™ 6 LED RECESSED DIRECT

CONTROLS

NX DISTRIBUTED™ INTELLIGENCE

NX Distributed Intelligence™ Lighting Controls:

Supports both indoor and outdoor applications in a variety of deployment options- wired, wireless, hybrid.
Integrates with and enables a wide array of luminaires including those with SpectraSync Color Tuning Technology.

NX INTEGRATED CONTROLS REFERENCE								
NX Option	Sensor	Networkable	Scheduling	Occupancy	Daylight Harvesting	0–10V Dimming	On/off Control	Bluetooth® App Programming
NX Standalone								
NXS	NXSMP-SMI	No	Yes	Yes	Yes	Yes	Yes	Yes
NX Networked – Wired								
NXE	N/A	Yes	Yes	No	No	Yes	Yes	Requires NXBTC/R [1]
NXES	NXSMP-SMI	Yes	Yes	Yes	Yes	Yes	Yes	Yes
NX Networked – Wireless								
NXSW	NXSMP-SMI	Yes	Yes	Yes	Yes	Yes	Yes	Yes
NXWE [2]	N/A	Yes	Yes	No	No	Yes	Yes	No[3]
NX Networked – Wired/Wireless								
NXSWD	NXSMP-SMI	Yes	Yes	Yes	Yes	Yes	Yes	Yes
NXWD	N/A	Yes	Yes	No	No	Yes	Yes	Requires NXBTC/R [1,3]

1 NXBTC/R needs to be plugged into an available NX SmartPort™ on the fixture network
2 Programming via App requires factory assistance
3 To program NXWE option, need to consult factory. If connected to an area controller, programming can be done from that

SpectraSync™ Color Tuning Technology:

Control your space based on the needs of the application, specific activities throughout the day and preferences of the occupants with distinct SpectraSync™ Color Tuning Technologies.

SpectraSync™ Color Tuning Technology

SPECTRASYNC COLOR TUNING TECHNOLOGY		
Mode	Kelvin Range	Description
Dim to Warm	2200K-3000K	Mimics the familiar warming effect that occurs with traditional incandescent sources as they are dimmed
Tunable White	2700K-5000K 2700K-6500K	Offers users the ability to tailor CCT to their personal preference, enhancing task visibility, material and colors or the aesthetics of the space
Scheduled White	2700K-5000K 2700K-6500K	Mimics the rhythm of natural light or follows an alternative user-defined schedule throughout the day, enhancing an occupant's mood and well-being

SpectraSync Tunable White

Available in two options: 2750T (2700K–5000K) or 2765T (2700K–6500K).
Requires two 0–10V controllers, one for intensity and one for CCT.
Minimum 5% dimming.

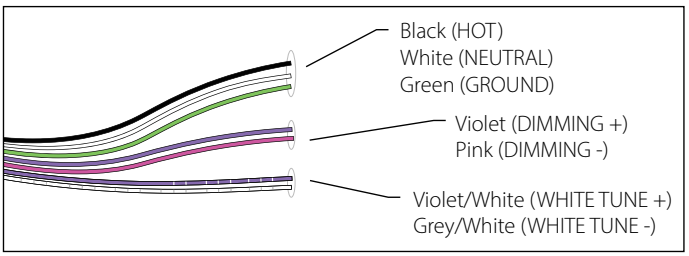

SpectraSync Tunable White luminaires are provided with two 0–10V circuits. The violet and pink circuit is for wiring to any qualified 0–10V controller for dimming. The violet/white and grey/white circuit is for wiring to any qualified 0–10V controller for Tunable White CCT control.

Controller Manufacturer Data

SpectraSync Tunable White was designed to be used with sinking style dimmers (provided by others) and is compatible with:

- Hubbell Control Solutions (HCS): NX Distributed Intelligence™ Room Controllers (NXRC) and In-fixture Controllers (NXFM)
- Lutron: DVTV, DVSTV, and NFTV dimmers
- Wattstopper: ADF120277 and CD4BL (Titan) dimmers

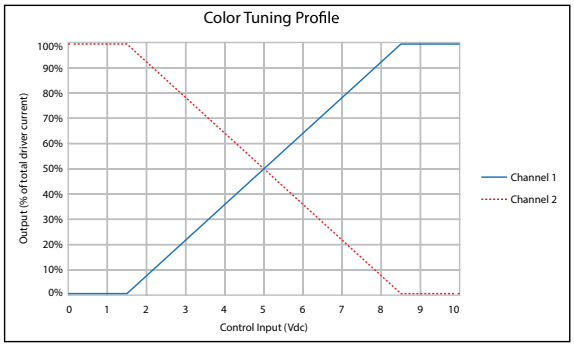

NX Design & Application Guide
NX Brochure
SpectraSync
NX Solutions Guide

© 2021 Litecontrol, a division of Hubbell Lighting, Inc. Specifications subject to change without notice.
65 Spring Street Plympton, MA 02367 / Tel 781.294.0100 / Website www.litecontrol.com

HUBBELL Lighting

DATE: | LOCATION:
TYPE: L12R | PROJECT:
CATALOG #:

6L-R-D

MOD™ 6 LED RECESSED DIRECT

PERFORMANCE DATA TABLE

The table below shows the delivered lumens for the various lumen outputs. Use this chart in connection with the output multiplier capability to deliver any output required.

Nomenclature	Lumens/Ft	W/Ft	Efficacy
Downlight			
D030 (min)	300	2.6	118
D035	350	3.0	118
D040	400	3.4	119
D045	450	3.8	119
D050	500	4.1	119
D055	550	4.6	119
D060	600	5.0	119
D065	650	5.5	119
D070	700	5.9	119
D075	750	6.4	119
D080	800	6.8	118
D085	850	7.2	118
D090	900	7.7	118
D095	950	8.1	117
D100	1000	8.6	117
D105	1050	9.0	117
D110	1100	9.5	116

(wattage may vary up to 5% from published)

Output Restrictions

Driver options listed below are not available for the output and length as shown.

Restrictions - Direct		Output LPA				
		300	350	400	450	500
Length (feet)	2	LEC, DALI, 347V	LEC, DALI, 347V	DALI, 347V	DALI, 347V	DALI, 347V
	3	DALI, 347V	DALI, 347V			

Output Multiplier Table

Photometrics for the 4L are published here at a nominal 3500K temperature. This table may be used to approximate the lumen values at different Kelvin temperatures. Power consumption would stay the same.

Option	2700K	3000K	3500K	4000K	5000K	2700K 90 CRI	3000K 90 CRI	3500K 90 CRI	4000K 90 CRI	5000K 90 CRI
SOF	0.95	0.98	1.00	1.03	1.05	0.83	0.85	0.88	0.90	0.93
REG	0.73	0.75	0.77	0.79	0.81	0.64	0.65	0.68	0.69	0.72
BWO	0.67	0.69	0.70	0.72	0.76	0.63	0.53	0.47	0.42	0.39
BAT	0.95	0.98	1.00	1.03	1.05	0.83	0.85	0.88	0.90	0.93
LPAD	0.86	0.88	0.90	0.93	0.95	0.75	0.77	0.79	0.81	0.84

© 2021 Litecontrol, a division of Hubbell Lighting, Inc. Specifications subject to change without notice.
65 Spring Street Plympton, MA 02367 / Tel 781.294.0100 / Website www.litecontrol.com

LITECONTROL
making light work™

DATE: | LOCATION:
TYPE: L12R | PROJECT:
CATALOG #:

6L-R-D

MOD™ 6 LED RECESSED DIRECT

DIMENSIONS

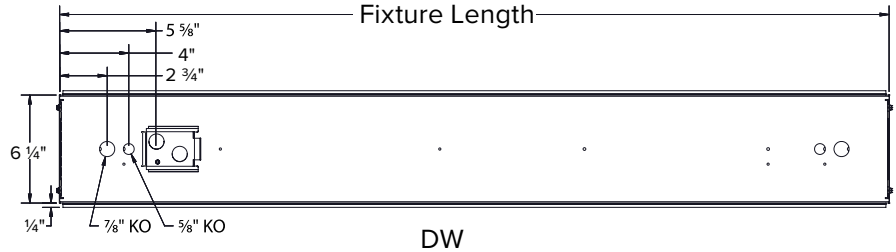

DW

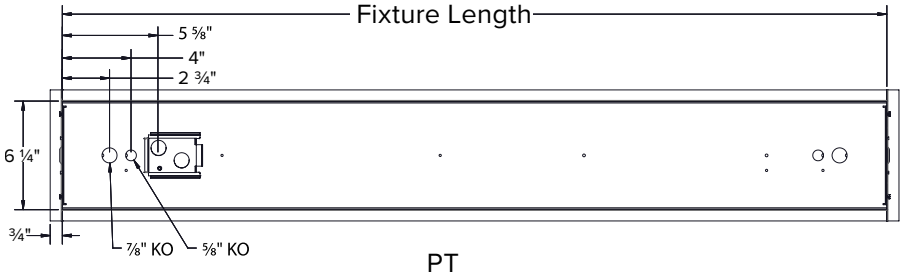

PT

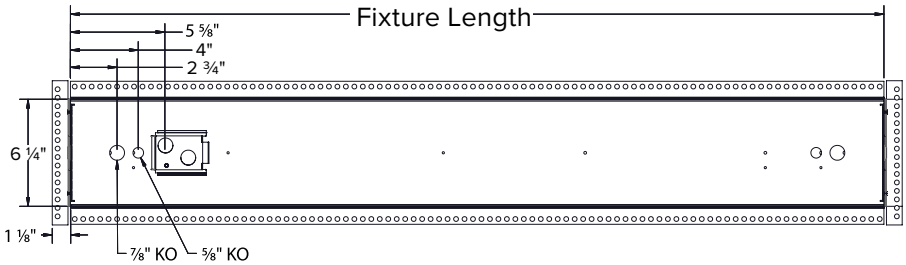

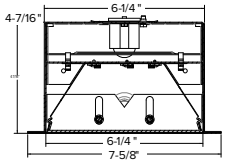

6L-DW

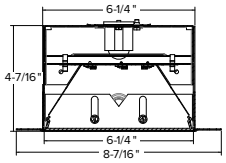

6L-PT

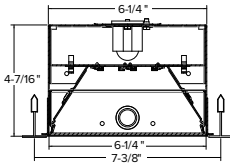

6L-LG

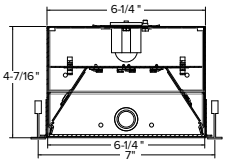

6L-NG

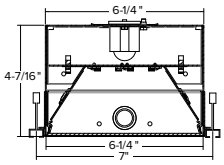

6L-SS

INDIVIDUAL MOUNTING

Drywall

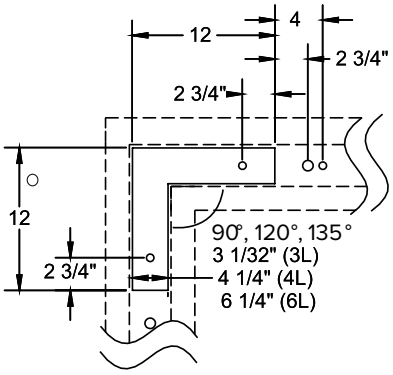

○ = 5/8" DIA. KO'S FOR 1/4 -20 THREADED ROD
=7/8" DIA. FEED KO'S

Grid

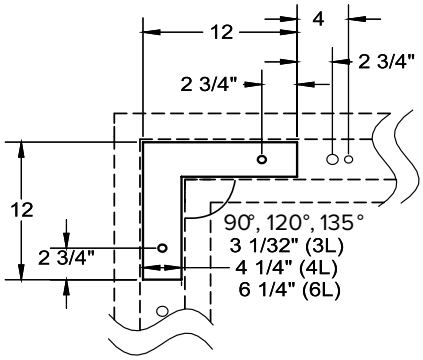

○ = 5/8" DIA. KO'S FOR 1/4 -20 THREADED ROD
○=7/8" DIA. FEED KO'S

PATTERNS

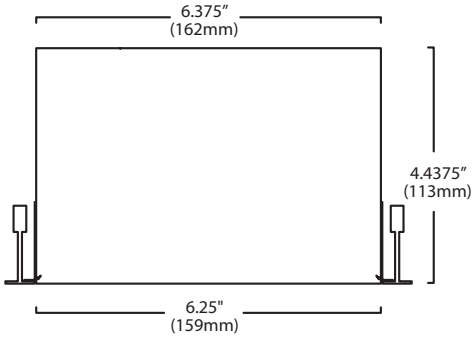

END CAP VIEW

© 2021 Litecontrol, a division of Hubbell Lighting, Inc. Specifications subject to change without notice.

65 Spring Street Plympton, MA 02367 / Tel 781.294.0100 / Website www.litecontrol.com

HUBBELL Lighting

LITECONTROL
making light work™

DATE:	LOCATION:
TYPE: L13/L13E	PROJECT:
CATALOG #:	

4L-P-D

MOD™ 3 LED PENDANT DIRECT

MODX

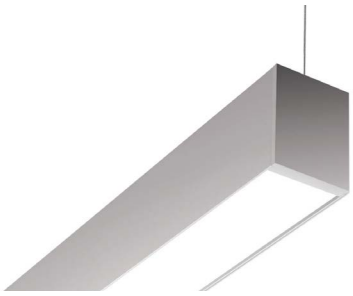

FEATURES

- Variable Intensity technology provides a range of specifiable outputs and resulting fixture wattages
- 2 SDCM color consistency
- End cap design eliminates visible diffuser seams/gaps

See Certification Specifications

CONTROLS

NX DISTRIBUTED INTELLIGENCE™ SpectraSync™

RELATED PRODUCTS

2L-P-D 3L-P-D 6L-P-D

SERVICE PROGRAMS

QS

SPECIFICATIONS

CONSTRUCTION

- Housing constructed from extruded aluminum
- End caps constructed from die cast aluminum with magnetic interface
- End caps overlap diffuser at each fixture end to elimate gaps and LED visibility

OPTICAL PERFORMANCE

- 2 SDCM color consistency, 80 or 90 CRI
- SOF: Soft diffuse acrylic lens
- REG: ½" regressed softglo lens with painted steel inserts. Output multiplier (.77)
- BWO: White blade baffle with softglo lens overlay. Output multiplier (.70)
- ASYM: Asymmetric Highly transmissive diffuse acrylic lens with linear prisms
- BAT: "Batwing" distribution created created from highly transmissive diffuse acrylic lens with linear prisms
- DRP: 1/2" protruding soft diffuse "drop" lens

INSTALLATION

- Suspension required at every row joint. 3/64" diameter field-adjustable aircraft cables, ships separately
- Low profile cable gripper limits visibility while providing maximum horizontal balance adjustment
- Pendant locations at ends of rows (or individual fixtures) are 1/2" from fixture ends
- Pendant attachment allows for horizontal adjustment to "fine-tune" side-to-side leveling
- Illuminated corners available in 90°, 120°, 135°. One piece construction, ready to install, with diffusers that match adjoining fixtures. Corner system connectors must be used to form patterns. The length of each outside or inside illuminated corner is 12"

INSTALLATION (CONTINUED)

- Square and Triangle non-illuminated connectors match fixture width for continuous look
- Fixture weight: 3lbs/ft

ELECTRICAL

- Variable Intensity (VI) technology allows precise specification of fixture output/ wattage. Fixture will be programmed and labeled to specification. Indirect and direct hemispheres can be independently specified
- LED boards and drivers can be accessed and removed from fixture, while installed
- Entire LED module can be removed and replaced
- 1C (1 Circuit) Fixture wired for a single circuit
- Non-feed: 2" diameter canopy covers provided (unless 5" non-feed cover is specified)
- Feed Cord: 4-wire, 7 amps max; 5-wire, 5 amps max
- Emergency Battery: 10W battery powered driver. Provides a minimum of 90 minutes of emergency lighting. Inverter-Compatible. Provided by others. Available in 4'+' fixtures

CONTROLS

- Sensors install between diffusers
- NX Distributed Intelligence™: Supports indoor and outdoor applications, wired, wireless and hybrid networked NX lighting control deployments and enabled emerging applications, such as Hubbell Lighting's SpectraSync™ Color Tuning Technology
- SpectraSync™ Color Tuning Technology: Control your space based on the needs of the application, specific activities throughout the day and preferences of the occupants

CERTIFICATIONS

- DLC® (DesignLights Consortium) Qualified - see www.designlights.org
- CSA listed for damp location
- IBEW
- AF of L
- UL924
- This product qualifies as a "designated country construction material" per FAR 52.225-11 Buy American-Construction. Materials under Trade Agreements effective 8/14/2020. See Buy American Solutions. Contact factory for configurations including SpectraSync, NX, or sensors.

WARRANTY

- LED boards - 5 years
- LED drivers (standard) - 5 years
- LED drivers (Lutron) - 3 years
- See www.litecontrol.com for details

KEY DATA	
Lumen Range Per Foot	D: 300 - 1100
Wattage Range Per Foot	2.6-10.0
Efficacy Range (LPW)	110-118
Rated Life (Hours)	L70: >61,000 L90: >61,000

© 2021 Litecontrol a division of Hubbell Lighting, Inc. Specifications subject to change without notice.
65 Spring Street Plympton, MA 02367 / Tel 781.294.0100 / Website www.litecontrol.com

HUBBELL Lighting

LITECONTROL
making light work™

4L-P-D

MOD™ 3 LED PENDANT DIRECT

DATE: | LOCATION:

TYPE: L13/L13E | PROJECT:

CATALOG #:

= Service Program

QS 10

Click icon for a list of Quick-Ship options

ORDERING GUIDE

Example: 4L-P-D-8-08-SOF-C1-27K-D030-D01-1C-UNV-FA1

CATALOG # 4L-P-D-13

4L	P	D	13	08	SOF	C1
Series	**Mounting**	**Fixture Distribution**	**Row Length (In Feet)**	**Max Length In Row**	**Direct Optical Distribution**	**Finish/Color [4]**
4L MOD	**P** Pendant	**D** Direct	**__'** Enter in foot increments	**02** 2', 609mm	**SOF** Soft Diffuse Lens, Lambertian	**C1** Matte White (Default)
		AD Asymmetric Direct		**03** 3', 914mm	**REG** Regressed Diffuse Lens [1]	**C2** Textured Matte White
				04 4', 1219mm	**BWO** Blade Baffle with Overlay [1]	**C3** Light Silver
				05 5', 1524mm	**ASYM** Asymmetric Diffuse Lens [1, 2]	**C4** Machined Aluminum
				06 6', 1829mm	**BAT** Batwing Lens	**C5** Carbon Black
				08 8', 2438mm	**DRP** Drop Lens [1, 3]	**C6** Textured Camera Black
						CC Custom Color

2750T	300 LM			UNV	
Color Temperature	**Direct Output/ft [6]**	**Driver**	**Circuiting**	**Voltage**	**Suspension Kit [10]**
27K 2700K [3]	**D030** 300 (min) [7]	**D01** 1% Dimming, 0-10V	**1C** 1 Circuit	**UNV** Universal Voltage (120V through 277V)	**FA1** Suspension Kit, 51"
30K 3000K	*to*	**D00** 1% Dim-to-Off, 0-10V		**347** 347 Volt [3, 9]	**FA2** Suspension Kit, 87"
35K 3500K	**D125** 1250 (max)	**D05** SpectraSync 5% Dimming, 0-10V [8]			**FA3** Suspension Kit, 219"
40K 4000K		**DS1** 1% Dimming w/ Soft Start, 0-10V			**FA4** Suspension Kit, 363"
50K 5000K [3]		**DS0** 1% Dim-to-Off w/ Soft Start, 0-10V			
27K9 2700K, 90 CRI [3]		**LEC** Hi-lume 1% Ecosystem LED Driver			
30K9 3000K, 90 CRI		**DALI** DALI [3]			
35K9 3500K, 90 CRI		**DALIP** Powered by DALI (2.0) [3]			
40K9 4000K, 90 CRI		**NDM** Non-Dimming			
50K9 5000K, 90 CRI [3]					
2230TD 2200K-3000K SpectraSync™ Dim-to-Warm [5]					
2750T 2700K-5000K SpectraSync™ Tunable White [5]					
2765T 2700K-6500K SpectraSync™ Tunable White [5]					

OPTIONAL

Nightlight	Emergency	Thru-wiring	Patterns [3, 13]	T-Bar Clips [14]
NL Nightlight Circuit Required. Enter quantity. 2NL = 2 nightlight circuits/row	**EF** 10W Emergency Battery Pack. Enter quantity. 2EF = 2 emergency batteries/row. [11]	**W1** No Thru Wire	**C90L** Illuminated 90° Corner	**CB1** T-bar clip - 15/16"
		W2 Provide Normal and Emergency/ Nightlight Thru Wiring [12]	**C120L** Illuminated 120° Corner	**CB2** T-bar clip - 9/16"
		W3 Provide Normal Thru Wiring Only	**C135L** Illuminated 135° Corner	**CB3** T-bar clip - 9/16" SS

Control Options [3]

NX Standalone

NXS NX, PIR BT Occupancy/Daylight Sensor, Slide Mount [15, 16, 17]

NX Networked – Wired

NXE NX, Dual SmartPORTs [15, 16]

NXES NX, PIR BT Occupancy/Daylight Sensor, Slide Mount, Dual SmartPORTs [15, 16]

NX Networked – Wireless

NXSW NX Wireless, PIR BT Occupancy/Daylight Sensor [15, 16, 17]

NXWE NX Wireless Wireless Enabled [15, 16]

NX Networked – Wired/Wireless

NXSWD NX Wireless, PIR BT Occupancy/Daylight Sensor, Dual SmartPORTs [15, 16, 17]

NXWD NX Wireless, Dual SmartPORTs [15, 16]

Sensors

SD1 Daylight Sensor Required. Enter quantity. 2SD1 = 2 daylight sensors/row

SO1 Occupancy Sensor Required. Enter quantity. 2SO1 = 2 occupancy sensors/row

Notes:

1 Not Available with Patterns.
2 Must be ordered with AD.
3 Additional lead time may be applicable. Contact factory.
4 Visit www.litecontrol.com/finishes for details.
5 Must be ordered with D05 Driver option; excludes 2' lengths and patterns.
6 Specifiable in 50 lumen increments. Reference the Performance Data Table for full performance offering and exceptions.
7 D030 not available in 2'
8 Must be ordered with 2230TD, 2750T or 2765T Option
9 Excludes Emergency Battery Pack 'EF' Option. Excludes DALI, DALIP and Lutron (LEC) Dimming Drivers
10 Add suffix /V to replace all 2" non-feed canopy covers with 5" canopy covers. FA1/V = 51" suspension kit w/ 5" canopies; canopies and feed cord are supplied in white regardless of fixture color unless otherwise specified.
11 EF - 10W battery powered driver. Provides a minimum of 90 minutes of emergency lighting. Inverter-Compatible. Provided by others.
12 Only applicable when specified with Emergency/Nightlight.
13 Contact Factory for pattern configurations. Approval drawings required.
14 Includes Luminaire Canopy Box.

NX In-Fixture Control Options:

15 Not available for row mounting. Only available with 0-10V Driver options. Contact factory for Length restrictions.
16 Refer to NX Integrated Controls Reference Table for Functionality of Options.
17 NX Sensors with Bluetooth, BLE, provides remote commission only.

© 2021 Litecontrol, a division of Hubbell Lighting, Inc. Specifications subject to change without notice.
65 Spring Street Plympton, MA 02367 / Tel 781.294.0100 / Website www.litecontrol.com

HUBBELL Lighting

DATE: | LOCATION:
TYPE: L13/L13E | PROJECT:
CATALOG #:

4L-P-D

MOD™ 3 LED PENDANT DIRECT

CONTROLS

NX DISTRIBUTED™ INTELLIGENCE

NX Distributed Intelligence™ Lighting Controls:

Supports both indoor and outdoor applications in a variety of deployment options- wired, wireless, hybrid.
Integrates with and enables a wide array of luminaires including those with SpectraSync Color Tuning Technology.

NX INTEGRATED CONTROLS REFERENCE								
NX Option	Sensor	Networkable	Scheduling	Occupancy	Daylight Harvesting	0–10V Dimming	On/off Control	Bluetooth® App Programming
NX Standalone								
NXS	NXSMP-SMI	No	Yes	Yes	Yes	Yes	Yes	Yes
NX Networked – Wired								
NXE	N/A	Yes	Yes	No	No	Yes	Yes	Requires NXBTC/R [1]
NXES	NXSMP-SMI	Yes	Yes	Yes	Yes	Yes	Yes	Yes
NX Networked – Wireless								
NXSW	NXSMP-SMI	Yes	Yes	Yes	Yes	Yes	Yes	Yes
NXWE [2]	N/A	Yes	Yes	No	No	Yes	Yes	No[3]
NX Networked – Wired/Wireless								
NXSWD	NXSMP-SMI	Yes	Yes	Yes	Yes	Yes	Yes	Yes
NXWD	N/A	Yes	Yes	No	No	Yes	Yes	Requires NXBTC/R [1,3]

1 NXBTC/R needs to be plugged into an available NX SmartPort™ on the fixture network
2 Programming via App requires factory assistance
3 To program NXWE option, need to consult factory. If connected to an area controller, programming can be done from that

SpectraSync™ Color Tuning Technology:

Control your space based on the needs of the application, specific activities throughout the day and preferences of the occupants with distinct SpectraSync™ Color Tuning Technologies.

SpectraSync™ Color Tuning Technology

SPECTRASYNC COLOR TUNING TECHNOLOGY		
Mode	Kelvin Range	Description
Dim to Warm	2200K-3000K	Mimics the familiar warming effect that occurs with traditional incandescent sources as they are dimmed
Tunable White	2700K-5000K 2700K-6500K	Offers users the ability to tailor CCT to their personal preference, enhancing task visibility, material and colors or the aesthetics of the space
Scheduled White	2700K-5000K 2700K-6500K	Mimics the rhythm of natural light or follows an alternative user-defined schedule throughout the day, enhancing an occupant's mood and well-being

SpectraSync Tunable White

Available in two options: 2750T (2700K–5000K) or 2765T (2700K–6500K).
Requires two 0–10V controllers, one for intensity and one for CCT.
Minimum 5% dimming.

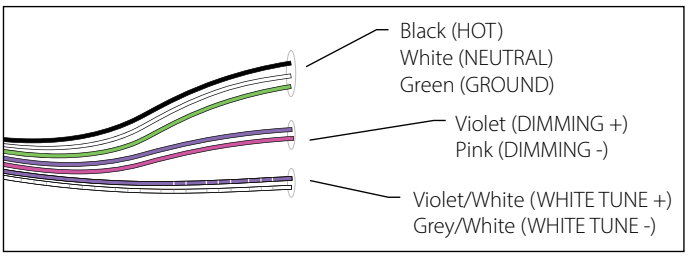

SpectraSync Tunable White luminaires are provided with two 0–10V circuits. The violet and pink circuit is for wiring to any qualified 0–10V controller for dimming. The violet/white and grey/white circuit is for wiring to any qualified 0–10V controller for Tunable White CCT control.

Controller Manufacturer Data

SpectraSync Tunable White was designed to be used with sinking style dimmers (provided by others) and is compatible with:

- Hubbell Control Solutions (HCS): NX Distributed Intelligence™ Room Controllers (NXRC) and In-fixture Controllers (NXFM)
- Lutron: DVTV, DVSTV, and NFTV dimmers
- Wattstopper: ADF120277 and CD4BL (Titan) dimmers

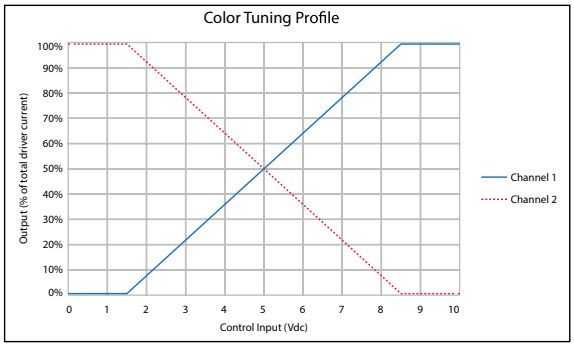

NX Design & Application Guide
NX Brochure
SpectraSync
NX Solutions Guide

© 2021 Litecontrol, a division of Hubbell Lighting, Inc. Specifications subject to change without notice.
65 Spring Street Plympton, MA 02367 / Tel 781.294.0100 / Website www.litecontrol.com

DATE: | LOCATION:
TYPE: L13/L13E | PROJECT:
CATALOG #:

4L-P-D

MOD™ 3 LED PENDANT DIRECT

PERFORMANCE DATA TABLE

The table below shows the delivered lumens for the various lumen outputs. Use this chart in connection with the output multiplier capability to deliver any output required.

Nomenclature	Lumens/Ft	W/Ft	Efficacy
Downlight			
D030 (min)	300	2.6	118
D035	350	3.0	118
D040	400	3.4	118
D045	450	3.8	118
D050	500	4.2	118
D055	550	4.7	117
D060	600	5.1	117
D065	650	5.6	116
D070	700	6.1	116
D075	750	6.5	115
D080	800	7.0	115
D085	850	7.5	113
D090	900	7.9	113
D095	950	8.5	112
D100	1000	9.0	112
D105	1050	9.4	111
D110 (max)	1100	10.0	110

(wattage may vary up to 5% from published)

Output Restrictions

Driver options listed below are not available for the output and length as shown.

Restrictions - Direct		Output LPA						
		300	350	400	450	500	950	1000
Length (feet)	2	LEC, DALI, 347V	LEC, DALI, 347V	DALI, 347V	DALI, 347V	DALI, 347V	LEC	LEC
	3	DALI, 347V	DALI, 347V				LEC	LEC
	4						LEC	LEC
	5						LEC	LEC
	6						LEC	LEC
	8						LEC	LEC

Output Multiplier Table

Photometrics for the 4L are published here at a nominal 3500K temperature. This table may be used to approximate the lumen values at different Kelvin temperatures. Power consumption would stay the same.

Option	2700K	3000K	3500K	4000K	5000K	2700K 90 CRI	3000K 90 CRI	3500K 90 CRI	4000K 90 CRI	5000K 90 CRI
SOF	0.95	0.98	1.00	1.03	1.05	0.83	0.85	0.88	0.90	0.93
REG	0.73	0.75	0.77	0.79	0.81	0.64	0.65	0.68	0.69	0.72
BWO	0.67	0.69	0.70	0.72	0.76	0.63	0.53	0.47	0.42	0.39
ASYM	0.95	0.98	1.00	1.03	1.05	0.83	0.85	0.88	0.90	0.93
BAT	0.95	0.98	1.00	1.03	1.05	0.83	0.85	0.88	0.90	0.93
DRP	0.95	0.98	1.00	1.03	1.05	0.83	0.85	0.88	0.90	0.93
LPAD	0.86	0.88	0.90	0.93	0.95	0.75	0.77	0.79	0.81	0.84

© 2021 Litecontrol, a division of Hubbell Lighting, Inc. Specifications subject to change without notice.
65 Spring Street Plympton, MA 02367 / Tel 781.294.0100 / Website www.litecontrol.com

LITECONTROL
making light work™

DATE: | LOCATION:
TYPE: L13/L13E | PROJECT:
CATALOG #:

4L-P-D

MOD™ 3 LED PENDANT DIRECT

DIMENSIONS

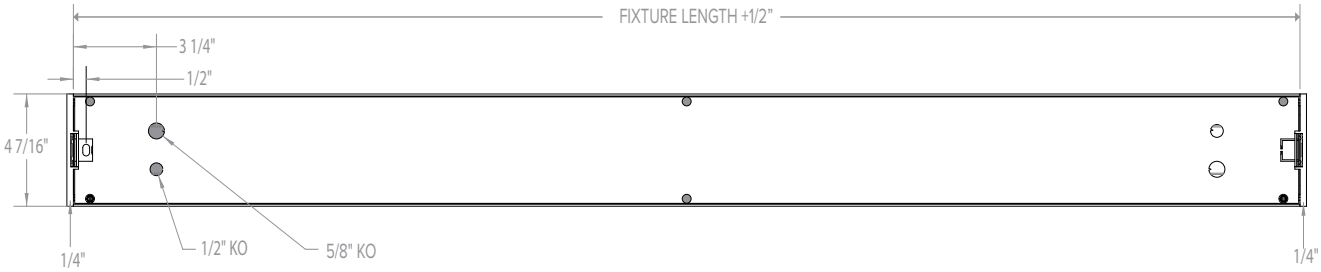

INDIVIDUAL MOUNTING

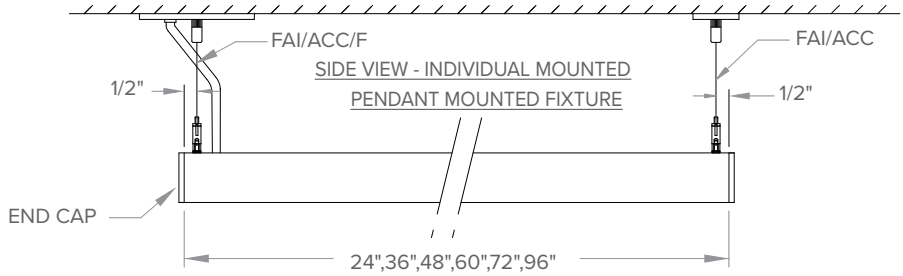

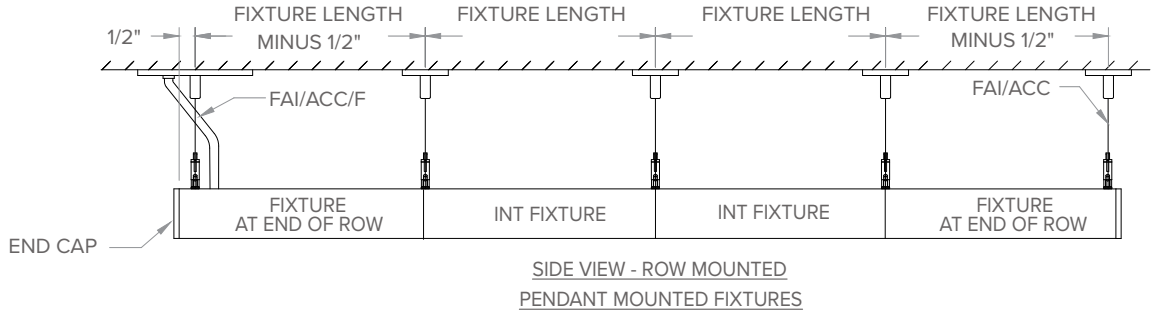

ROW MOUNTING

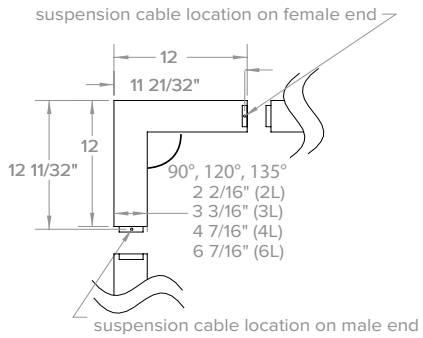

PATTERNS

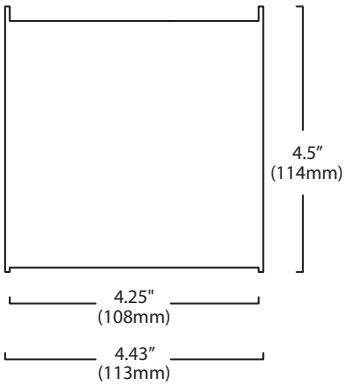

END CAP VIEW

© 2021 Litecontrol, a division of Hubbell Lighting, Inc. Specifications subject to change without notice.
65 Spring Street Plympton, MA 02367 / Tel 781.294.0100 / Website www.litecontrol.com

HUBBELL Lighting

LITECONTROL
making light work™

DATE:	LOCATION:
TYPE: L14/L14E	PROJECT:
CATALOG #:	

4L-P-D

MOD™ 3 LED PENDANT DIRECT

MODX

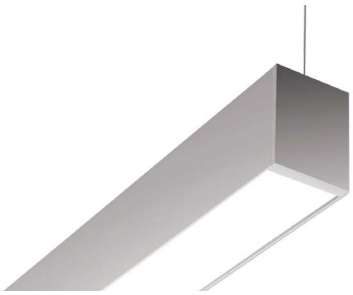

FEATURES

- Variable Intensity technology provides a range of specifiable outputs and resulting fixture wattages
- 2 SDCM color consistency
- End cap design eliminates visible diffuser seams/gaps

See Certification Specifications

CONTROLS

NX DISTRIBUTED INTELLIGENCE™ SpectraSync™

RELATED PRODUCTS

2L-P-D 3L-P-D 6L-P-D

SERVICE PROGRAMS

QS

SPECIFICATIONS

CONSTRUCTION

- Housing constructed from extruded aluminum
- End caps constructed from die cast aluminum with magnetic interface
- End caps overlap diffuser at each fixture end to elimate gaps and LED visibility

OPTICAL PERFORMANCE

- 2 SDCM color consistency, 80 or 90 CRI
- SOF: Soft diffuse acrylic lens
- REG: ½" regressed softglo lens with painted steel inserts. Output multiplier (.77)
- BWO: White blade baffle with softglo lens overlay. Output multiplier (.70)
- ASYM: Asymmetric Highly transmissive diffuse acrylic lens with linear prisms
- BAT: "Batwing" distribution created created from highly transmissive diffuse acrylic lens with linear prisms
- DRP: 1/2" protruding soft diffuse "drop" lens

INSTALLATION

- Suspension required at every row joint. 3/64" diameter field-adjustable aircraft cables, ships separately
- Low profile cable gripper limits visibility while providing maximum horizontal balance adjustment
- Pendant locations at ends of rows (or individual fixtures) are 1/2" from fixture ends
- Pendant attachment allows for horizontal adjustment to "fine-tune" side-to-side leveling
- Illuminated corners available in 90°, 120°, 135°. One piece construction, ready to install, with diffusers that match adjoining fixtures. Corner system connectors must be used to form patterns. The length of each outside or inside illuminated corner is 12"

INSTALLATION (CONTINUED)

- Square and Triangle non-illuminated connectors match fixture width for continuous look
- Fixture weight: 3lbs/ft

ELECTRICAL

- Variable Intensity (VI) technology allows precise specification of fixture output/ wattage. Fixture will be programmed and labeled to specification. Indirect and direct hemispheres can be independently specified
- LED boards and drivers can be accessed and removed from fixture, while installed
- Entire LED module can be removed and replaced
- 1C (1 Circuit) Fixture wired for a single circuit
- Non-feed: 2" diameter canopy covers provided (unless 5" non-feed cover is specified)
- Feed Cord: 4-wire, 7 amps max; 5-wire, 5 amps max
- Emergency Battery: 10W battery powered driver. Provides a minimum of 90 minutes of emergency lighting. Inverter-Compatible. Provided by others. Available in 4'+' fixtures

CONTROLS

- Sensors install between diffusers
- NX Distributed Intelligence™: Supports indoor and outdoor applications, wired, wireless and hybrid networked NX lighting control deployments and enabled emerging applications, such as Hubbell Lighting's SpectraSync™ Color Tuning Technology
- SpectraSync™ Color Tuning Technology: Control your space based on the needs of the application, specific activities throughout the day and preferences of the occupants

CERTIFICATIONS

- DLC® (DesignLights Consortium) Qualified - see www.designlights.org
- CSA listed for damp location
- IBEW
- AF of L
- UL924
- This product qualifies as a "designated country construction material" per FAR 52.225-11 Buy American-Construction. Materials under Trade Agreements effective 8/14/2020. See Buy American Solutions. Contact factory for configurations including SpectraSync, NX, or sensors.

WARRANTY

- LED boards - 5 years
- LED drivers (standard) - 5 years
- LED drivers (Lutron) - 3 years
- See www.litecontrol.com for details

KEY DATA	
Lumen Range Per Foot	D: 300 - 1100
Wattage Range Per Foot	2.6-10.0
Efficacy Range (LPW)	110-118
Rated Life (Hours)	L70: >61,000 L90: >61,000

© 2021 Litecontrol a division of Hubbell Lighting, Inc. Specifications subject to change without notice.
65 Spring Street Plympton, MA 02367 / Tel 781.294.0100 / Website www.litecontrol.com

HUBBELL Lighting

LITECONTROL
making light work™

4L-P-D

MOD™ 3 LED PENDANT DIRECT

DATE: | LOCATION:

TYPE: L14/L14E | PROJECT:

CATALOG #:

= Service Program

QS 10

Click icon for a list of Quick-Ship options

ORDERING GUIDE

Example: 4L-P-D-8-08-SOF-C1-27K-D030-D01-1C-UNV-FA1

CATALOG # 4L-P-D-14

4L	P	D	14	08	SOF	C1
Series	**Mounting**	**Fixture Distribution**	**Row Length (In Feet)**	**Max Length In Row**	**Direct Optical Distribution**	**Finish/Color [4]**
4L MOD	**P** Pendant	**D** Direct	**__'** Enter in foot increments	**02** 2', 609mm	**SOF** Soft Diffuse Lens, Lambertian	**C1** Matte White (Default)
		AD Asymmetric Direct		**03** 3', 914mm	**REG** Regressed Diffuse Lens [1]	**C2** Textured Matte White
				04 4', 1219mm	**BWO** Blade Baffle with Overlay [1]	**C3** Light Silver
				05 5', 1524mm	**ASYM** Asymmetric Diffuse Lens [1, 2]	**C4** Machined Aluminum
				06 6', 1829mm	**BAT** Batwing Lens	**C5** Carbon Black
				08 8', 2438mm	**DRP** Drop Lens [1, 3]	**C6** Textured Camera Black
						CC Custom Color

2750T	300 LM	D01		UNV	
Color Temperature	**Direct Output/ft [6]**	**Driver**	**Circuiting**	**Voltage**	**Suspension Kit [10]**
27K 2700K [3]	**D030** 300 (min) [7]	**D01** 1% Dimming, 0-10V	**1C** 1 Circuit	**UNV** Universal Voltage (120V through 277V)	**FA1** Suspension Kit, 51"
30K 3000K	*to*	**D00** 1% Dim-to-Off, 0-10V		**347** 347 Volt [3, 9]	**FA2** Suspension Kit, 87"
35K 3500K	**D125** 1250 (max)	**D05** SpectraSync 5% Dimming, 0-10V [8]			**FA3** Suspension Kit, 219"
40K 4000K		**DS1** 1% Dimming w/ Soft Start, 0-10V			**FA4** Suspension Kit, 363"
50K 5000K [3]		**DS0** 1% Dim-to-Off w/ Soft Start, 0-10V			
27K9 2700K, 90 CRI [3]		**LEC** Hi-lume 1% Ecosystem LED Driver			
30K9 3000K, 90 CRI		**DALI** DALI [3]			
35K9 3500K, 90 CRI		**DALIP** Powered by DALI (2.0) [3]			
40K9 4000K, 90 CRI		**NDM** Non-Dimming			
50K9 5000K, 90 CRI [3]					
2230TD 2200K-3000K SpectraSync™ Dim-to-Warm [5]					
2750T 2700K-5000K SpectraSync™ Tunable White [5]					
2765T 2700K-6500K SpectraSync™ Tunable White [5]					

OPTIONAL

Nightlight	Emergency	Thru-wiring	Patterns [3, 13]	T-Bar Clips [14]
NL Nightlight Circuit Required. Enter quantity. 2NL = 2 nightlight circuits/row	**EF** 10W Emergency Battery Pack. Enter quantity. 2EF = 2 emergency batteries/row. [11]	**W1** No Thru Wire	**C90L** Illuminated 90° Corner	**CB1** T-bar clip - 15/16"
		W2 Provide Normal and Emergency/ Nightlight Thru Wiring [12]	**C120L** Illuminated 120° Corner	**CB2** T-bar clip - 9/16"
		W3 Provide Normal Thru Wiring Only	**C135L** Illuminated 135° Corner	**CB3** T-bar clip - 9/16" SS

Control Options [3]

NX Standalone

NXS NX, PIR BT Occupancy/Daylight Sensor, Slide Mount [15, 16, 17]

NX Networked – Wired

NXE NX, Dual SmartPORTs [15, 16]

NXES NX, PIR BT Occupancy/Daylight Sensor, Slide Mount, Dual SmartPORTs [15, 16]

NX Networked – Wireless

NXSW NX Wireless, PIR BT Occupancy/Daylight Sensor [15, 16, 17]

NXWE NX Wireless Wireless Enabled [15, 16]

NX Networked – Wired/Wireless

NXSWD NX Wireless, PIR BT Occupancy/Daylight Sensor, Dual SmartPORTs [15, 16, 17]

NXWD NX Wireless, Dual SmartPORTs [15, 16]

Sensors

SD1 Daylight Sensor Required. Enter quantity. 2SD1 = 2 daylight sensors/row

SO1 Occupancy Sensor Required. Enter quantity. 2SO1 = 2 occupancy sensors/row

Notes:

1 Not Available with Patterns.
2 Must be ordered with AD.
3 Additional lead time may be applicable. Contact factory.
4 Visit www.litecontrol.com/finishes for details.
5 Must be ordered with D05 Driver option; excludes 2' lengths and patterns.
6 Specifiable in 50 lumen increments. Reference the Performance Data Table for full performance offering and exceptions.
7 D030 not available in 2'
8 Must be ordered with 2230TD, 2750T or 2765T Option
9 Excludes Emergency Battery Pack 'EF' Option. Excludes DALI, DALIP and Lutron (LEC) Dimming Drivers
10 Add suffix /V to replace all 2" non-feed canopy covers with 5" canopy covers. FA1/V = 51" suspension kit w/ 5" canopies; canopies and feed cord are supplied in white regardless of fixture color unless otherwise specified.
11 EF - 10W battery powered driver. Provides a minimum of 90 minutes of emergency lighting. Inverter-Compatible. Provided by others.
12 Only applicable when specified with Emergency/Nightlight.
13 Contact Factory for pattern configurations. Approval drawings required.
14 Includes Luminaire Canopy Box.

NX In-Fixture Control Options:

15 Not available for row mounting. Only available with 0-10V Driver options. Contact factory for Length restrictions.
16 Refer to NX Integrated Controls Reference Table for Functionality of Options.
17 NX Sensors with Bluetooth, BLE, provides remote commission only.

© 2021 Litecontrol, a division of Hubbell Lighting, Inc. Specifications subject to change without notice.
65 Spring Street Plympton, MA 02367 / Tel 781.294.0100 / Website www.litecontrol.com

HUBBELL Lighting

DATE: | LOCATION:
TYPE: L14/L14E | PROJECT:
CATALOG #:

4L-P-D

MOD™ 3 LED PENDANT DIRECT

CONTROLS

NX DISTRIBUTED™ INTELLIGENCE

NX Distributed Intelligence™ Lighting Controls:

Supports both indoor and outdoor applications in a variety of deployment options- wired, wireless, hybrid.
Integrates with and enables a wide array of luminaires including those with SpectraSync Color Tuning Technology.

NX INTEGRATED CONTROLS REFERENCE								
NX Option	Sensor	Networkable	Scheduling	Occupancy	Daylight Harvesting	0–10V Dimming	On/off Control	Bluetooth® App Programming
NX Standalone								
NXS	NXSMP-SMI	No	Yes	Yes	Yes	Yes	Yes	Yes
NX Networked – Wired								
NXE	N/A	Yes	Yes	No	No	Yes	Yes	Requires NXBTC/R [1]
NXES	NXSMP-SMI	Yes	Yes	Yes	Yes	Yes	Yes	Yes
NX Networked – Wireless								
NXSW	NXSMP-SMI	Yes	Yes	Yes	Yes	Yes	Yes	Yes
NXWE [2]	N/A	Yes	Yes	No	No	Yes	Yes	No[3]
NX Networked – Wired/Wireless								
NXSWD	NXSMP-SMI	Yes	Yes	Yes	Yes	Yes	Yes	Yes
NXWD	N/A	Yes	Yes	No	No	Yes	Yes	Requires NXBTC/R [1,3]

1 NXBTC/R needs to be plugged into an available NX SmartPort™ on the fixture network
2 Programming via App requires factory assistance
3 To program NXWE option, need to consult factory. If connected to an area controller, programming can be done from that

SpectraSync™ Color Tuning Technology:

Control your space based on the needs of the application, specific activities throughout the day and preferences of the occupants with distinct SpectraSync™ Color Tuning Technologies.

SpectraSync™ Color Tuning Technology

SPECTRASYNC COLOR TUNING TECHNOLOGY		
Mode	Kelvin Range	Description
Dim to Warm	2200K-3000K	Mimics the familiar warming effect that occurs with traditional incandescent sources as they are dimmed
Tunable White	2700K-5000K 2700K-6500K	Offers users the ability to tailor CCT to their personal preference, enhancing task visibility, material and colors or the aesthetics of the space
Scheduled White	2700K-5000K 2700K-6500K	Mimics the rhythm of natural light or follows an alternative user-defined schedule throughout the day, enhancing an occupant's mood and well-being

SpectraSync Tunable White

Available in two options: 2750T (2700K–5000K) or 2765T (2700K–6500K).
Requires two 0–10V controllers, one for intensity and one for CCT.
Minimum 5% dimming.

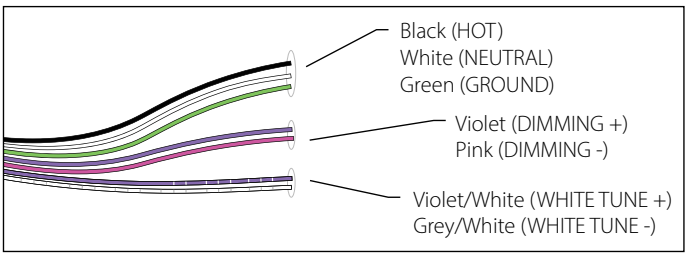

SpectraSync Tunable White luminaires are provided with two 0–10V circuits. The violet and pink circuit is for wiring to any qualified 0–10V controller for dimming. The violet/white and grey/white circuit is for wiring to any qualified 0–10V controller for Tunable White CCT control.

Controller Manufacturer Data

SpectraSync Tunable White was designed to be used with sinking style dimmers (provided by others) and is compatible with:

- Hubbell Control Solutions (HCS): NX Distributed Intelligence™ Room Controllers (NXRC) and In-fixture Controllers (NXFM)
- Lutron: DVTV, DVSTV, and NFTV dimmers
- Wattstopper: ADF120277 and CD4BL (Titan) dimmers

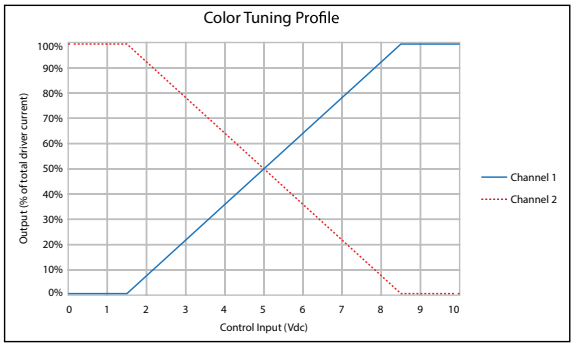

NX Design & Application Guide
NX Brochure
SpectraSync
NX Solutions Guide

© 2021 Litecontrol, a division of Hubbell Lighting, Inc. Specifications subject to change without notice.
65 Spring Street Plympton, MA 02367 / Tel 781.294.0100 / Website www.litecontrol.com

DATE: LOCATION:
TYPE: L14/L14E PROJECT:
CATALOG #:

4L-P-D

MOD™ 3 LED PENDANT DIRECT

PERFORMANCE DATA TABLE

The table below shows the delivered lumens for the various lumen outputs. Use this chart in connection with the output multiplier capability to deliver any output required.

Nomenclature	Lumens/Ft	W/Ft	Efficacy
Downlight			
D030 (min)	300	2.6	118
D035	350	3.0	118
D040	400	3.4	118
D045	450	3.8	118
D050	500	4.2	118
D055	550	4.7	117
D060	600	5.1	117
D065	650	5.6	116
D070	700	6.1	116
D075	750	6.5	115
D080	800	7.0	115
D085	850	7.5	113
D090	900	7.9	113
D095	950	8.5	112
D100	1000	9.0	112
D105	1050	9.4	111
D110 (max)	1100	10.0	110

(wattage may vary up to 5% from published)

Output Restrictions

Driver options listed below are not available for the output and length as shown.

Restrictions - Direct		Output LPA						
		300	350	400	450	500	950	1000
Length (feet)	2	LEC, DALI, 347V	LEC, DALI, 347V	DALI, 347V	DALI, 347V	DALI, 347V	LEC	LEC
	3	DALI, 347V	DALI, 347V				LEC	LEC
	4						LEC	LEC
	5						LEC	LEC
	6						LEC	LEC
	8						LEC	LEC

Output Multiplier Table

Photometrics for the 4L are published here at a nominal 3500K temperature. This table may be used to approximate the lumen values at different Kelvin temperatures. Power consumption would stay the same.

Option	2700K	3000K	3500K	4000K	5000K	2700K 90 CRI	3000K 90 CRI	3500K 90 CRI	4000K 90 CRI	5000K 90 CRI
SOF	0.95	0.98	1.00	1.03	1.05	0.83	0.85	0.88	0.90	0.93
REG	0.73	0.75	0.77	0.79	0.81	0.64	0.65	0.68	0.69	0.72
BWO	0.67	0.69	0.70	0.72	0.76	0.63	0.53	0.47	0.42	0.39
ASYM	0.95	0.98	1.00	1.03	1.05	0.83	0.85	0.88	0.90	0.93
BAT	0.95	0.98	1.00	1.03	1.05	0.83	0.85	0.88	0.90	0.93
DRP	0.95	0.98	1.00	1.03	1.05	0.83	0.85	0.88	0.90	0.93
LPAD	0.86	0.88	0.90	0.93	0.95	0.75	0.77	0.79	0.81	0.84

© 2021 Litecontrol, a division of Hubbell Lighting, Inc. Specifications subject to change without notice.
65 Spring Street Plympton, MA 02367 / Tel 781.294.0100 / Website www.litecontrol.com

LITECONTROL
making light work™

DATE:	LOCATION:
TYPE: L14/L14E	PROJECT:
CATALOG #:	

4L-P-D

MOD™ 3 LED PENDANT DIRECT

DIMENSIONS

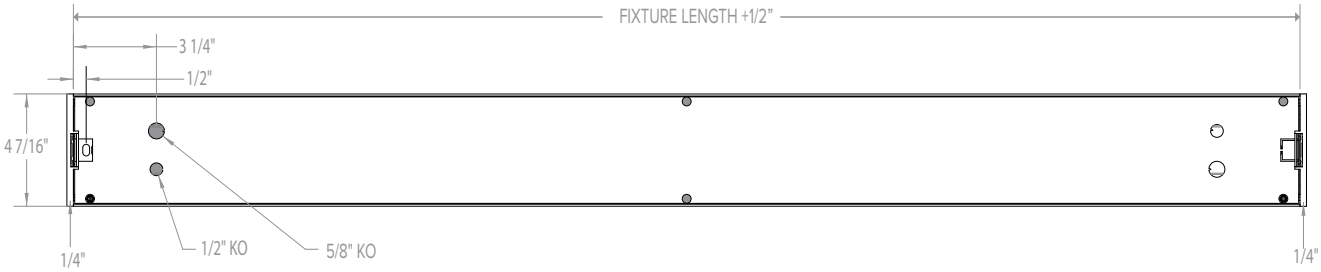

INDIVIDUAL MOUNTING

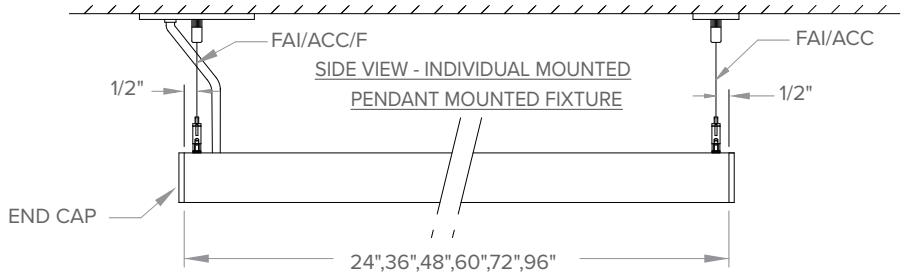

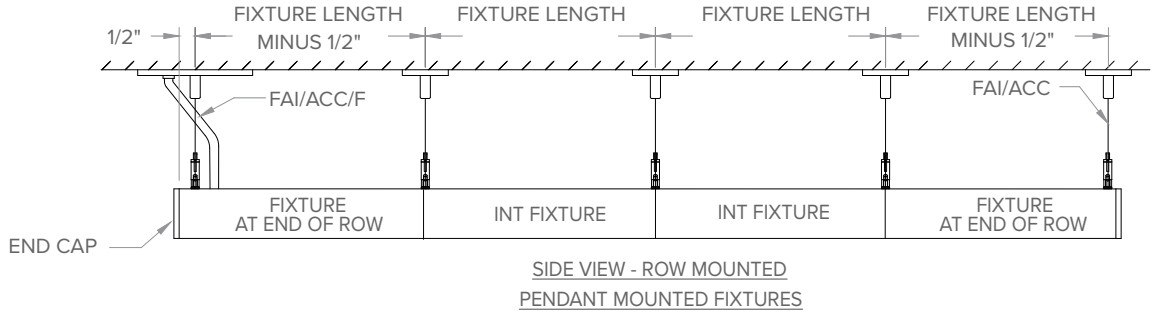

ROW MOUNTING

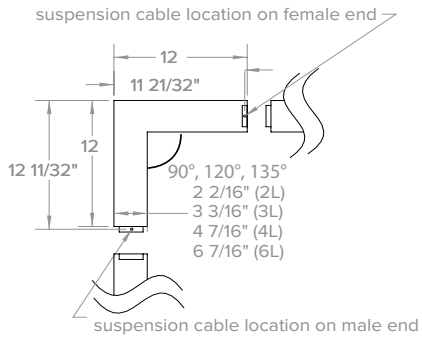

PATTERNS

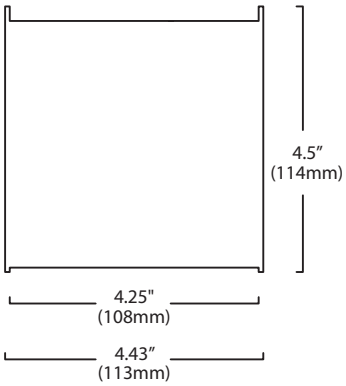

END CAP VIEW

© 2021 Litecontrol, a division of Hubbell Lighting, Inc. Specifications subject to change without notice.

65 Spring Street Plympton, MA 02367 / Tel 781.294.0100 / Website www.litecontrol.com

HUBBELL Lighting

LITECONTROL
making light work™

DATE:	LOCATION:
TYPE: L27/L27E	PROJECT:
CATALOG #:	

4L-P-D

MOD™ 3 LED PENDANT DIRECT

MODX

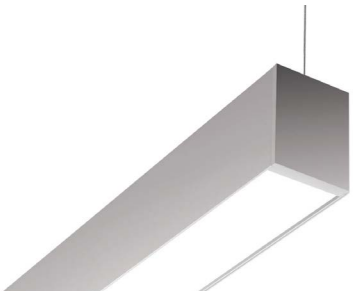

FEATURES

- Variable Intensity technology provides a range of specifiable outputs and resulting fixture wattages
- 2 SDCM color consistency
- End cap design eliminates visible diffuser seams/gaps

See Certification Specifications

CONTROLS

NX DISTRIBUTED INTELLIGENCE™ SpectraSync™

RELATED PRODUCTS

2L-P-D 3L-P-D 6L-P-D

SERVICE PROGRAMS

QS

SPECIFICATIONS

CONSTRUCTION

- Housing constructed from extruded aluminum
- End caps constructed from die cast aluminum with magnetic interface
- End caps overlap diffuser at each fixture end to elimate gaps and LED visibility

OPTICAL PERFORMANCE

- 2 SDCM color consistency, 80 or 90 CRI
- SOF: Soft diffuse acrylic lens
- REG: ½" regressed softglo lens with painted steel inserts. Output multiplier (.77)
- BWO: White blade baffle with softglo lens overlay. Output multiplier (.70)
- ASYM: Asymmetric Highly transmissive diffuse acrylic lens with linear prisms
- BAT: "Batwing" distribution created created from highly transmissive diffuse acrylic lens with linear prisms
- DRP: 1/2" protruding soft diffuse "drop" lens

INSTALLATION

- Suspension required at every row joint. 3/64" diameter field-adjustable aircraft cables, ships separately
- Low profile cable gripper limits visibility while providing maximum horizontal balance adjustment
- Pendant locations at ends of rows (or individual fixtures) are 1/2" from fixture ends
- Pendant attachment allows for horizontal adjustment to "fine-tune" side-to-side leveling
- Illuminated corners available in 90°, 120°, 135°. One piece construction, ready to install, with diffusers that match adjoining fixtures. Corner system connectors must be used to form patterns. The length of each outside or inside illuminated corner is 12"

INSTALLATION (CONTINUED)

- Square and Triangle non-illuminated connectors match fixture width for continuous look
- Fixture weight: 3lbs/ft

ELECTRICAL

- Variable Intensity (VI) technology allows precise specification of fixture output/ wattage. Fixture will be programmed and labeled to specification. Indirect and direct hemispheres can be independently specified
- LED boards and drivers can be accessed and removed from fixture, while installed
- Entire LED module can be removed and replaced
- 1C (1 Circuit) Fixture wired for a single circuit
- Non-feed: 2" diameter canopy covers provided (unless 5" non-feed cover is specified)
- Feed Cord: 4-wire, 7 amps max; 5-wire, 5 amps max
- Emergency Battery: 10W battery powered driver. Provides a minimum of 90 minutes of emergency lighting. Inverter-Compatible. Provided by others. Available in 4'+' fixtures

CONTROLS

- Sensors install between diffusers
- NX Distributed Intelligence™: Supports indoor and outdoor applications, wired, wireless and hybrid networked NX lighting control deployments and enabled emerging applications, such as Hubbell Lighting's SpectraSync™ Color Tuning Technology
- SpectraSync™ Color Tuning Technology: Control your space based on the needs of the application, specific activities throughout the day and preferences of the occupants

CERTIFICATIONS

- DLC® (DesignLights Consortium) Qualified - see www.designlights.org
- CSA listed for damp location
- IBEW
- AF of L
- UL924
- This product qualifies as a "designated country construction material" per FAR 52.225-11 Buy American-Construction. Materials under Trade Agreements effective 8/14/2020. See Buy American Solutions. Contact factory for configurations including SpectraSync, NX, or sensors.

WARRANTY

- LED boards - 5 years
- LED drivers (standard) - 5 years
- LED drivers (Lutron) - 3 years
- See www.litecontrol.com for details

KEY DATA	
Lumen Range Per Foot	D: 300 - 1100
Wattage Range Per Foot	2.6-10.0
Efficacy Range (LPW)	110-118
Rated Life (Hours)	L70: >61,000 L90: >61,000

© 2021 Litecontrol a division of Hubbell Lighting, Inc. Specifications subject to change without notice.
65 Spring Street Plympton, MA 02367 / Tel 781.294.0100 / Website www.litecontrol.com

HUBBELL Lighting

LITECONTROL
making light work™

4L-P-D

MOD™ 3 LED PENDANT DIRECT

DATE: | LOCATION:

TYPE: L27/L27E | PROJECT:

CATALOG #:

= Service Program

QS 10

Click icon for a list of Quick-Ship options

ORDERING GUIDE

Example: 4L-P-D-8-08-SOF-C1-27K-D030-D01-1C-UNV-FA1

CATALOG # 4L-P-D-27

4L	P	D	27	08	SOF	C1
Series	**Mounting**	**Fixture Distribution**	**Row Length (In Feet)**	**Max Length In Row**	**Direct Optical Distribution**	**Finish/Color [4]**
4L MOD	**P** Pendant	**D** Direct	**__'** Enter in foot increments	**02** 2', 609mm	**SOF** Soft Diffuse Lens, Lambertian	**C1** Matte White (Default)
		AD Asymmetric Direct		**03** 3', 914mm	**REG** Regressed Diffuse Lens [1]	**C2** Textured Matte White
				04 4', 1219mm	**BWO** Blade Baffle with Overlay [1]	**C3** Light Silver
				05 5', 1524mm	**ASYM** Asymmetric Diffuse Lens [1, 2]	**C4** Machined Aluminum
				06 6', 1829mm	**BAT** Batwing Lens	**C5** Carbon Black
				08 8', 2438mm	**DRP** Drop Lens [1, 3]	**C6** Textured Camera Black
						CC Custom Color

2750T	300 LM	D01		UNV	
Color Temperature	**Direct Output/ft [6]**	**Driver**	**Circuiting**	**Voltage**	**Suspension Kit [10]**
27K 2700K [3]	**D030** 300 (min) [7]	**D01** 1% Dimming, 0-10V	**1C** 1 Circuit	**UNV** Universal Voltage (120V through 277V)	**FA1** Suspension Kit, 51"
30K 3000K	*to*	**D00** 1% Dim-to-Off, 0-10V		**347** 347 Volt [3, 9]	**FA2** Suspension Kit, 87"
35K 3500K	**D125** 1250 (max)	**D05** SpectraSync 5% Dimming, 0-10V [8]			**FA3** Suspension Kit, 219"
40K 4000K		**DS1** 1% Dimming w/ Soft Start, 0-10V			**FA4** Suspension Kit, 363"
50K 5000K [3]		**DS0** 1% Dim-to-Off w/ Soft Start, 0-10V			
27K9 2700K, 90 CRI [3]		**LEC** Hi-lume 1% Ecosystem LED Driver			
30K9 3000K, 90 CRI		**DALI** DALI [3]			
35K9 3500K, 90 CRI		**DALIP** Powered by DALI (2.0) [3]			
40K9 4000K, 90 CRI		**NDM** Non-Dimming			
50K9 5000K, 90 CRI [3]					
2230TD 2200K-3000K SpectraSync™ Dim-to-Warm [5]					
2750T 2700K-5000K SpectraSync™ Tunable White [5]					
2765T 2700K-6500K SpectraSync™ Tunable White [5]					

OPTIONAL

Nightlight	Emergency	Thru-wiring	Patterns [3, 13]	T-Bar Clips [14]
NL Nightlight Circuit Required. Enter quantity. 2NL = 2 nightlight circuits/row	**EF** 10W Emergency Battery Pack. Enter quantity. 2EF = 2 emergency batteries/row. [11]	**W1** No Thru Wire	**C90L** Illuminated 90° Corner	**CB1** T-bar clip - 15/16"
		W2 Provide Normal and Emergency/ Nightlight Thru Wiring [12]	**C120L** Illuminated 120° Corner	**CB2** T-bar clip - 9/16"
		W3 Provide Normal Thru Wiring Only	**C135L** Illuminated 135° Corner	**CB3** T-bar clip - 9/16" SS

Control Options [3]

NX Standalone

NXS NX, PIR BT Occupancy/Daylight Sensor, Slide Mount [15, 16, 17]

NX Networked – Wired

NXE NX, Dual SmartPORTs [15, 16]

NXES NX, PIR BT Occupancy/Daylight Sensor, Slide Mount, Dual SmartPORTs [15, 16]

NX Networked – Wireless

NXSW NX Wireless, PIR BT Occupancy/Daylight Sensor [15, 16, 17]

NXWE NX Wireless Wireless Enabled [15, 16]

NX Networked – Wired/Wireless

NXSWD NX Wireless, PIR BT Occupancy/Daylight Sensor, Dual SmartPORTs [15, 16, 17]

NXWD NX Wireless, Dual SmartPORTs [15, 16]

Sensors

SD1 Daylight Sensor Required. Enter quantity. 2SD1 = 2 daylight sensors/row

SO1 Occupancy Sensor Required. Enter quantity. 2SO1 = 2 occupancy sensors/row

Notes:

1 Not Available with Patterns.
2 Must be ordered with AD.
3 Additional lead time may be applicable. Contact factory.
4 Visit www.litecontrol.com/finishes for details.
5 Must be ordered with D05 Driver option; excludes 2' lengths and patterns.
6 Specifiable in 50 lumen increments. Reference the Performance Data Table for full performance offering and exceptions.
7 D030 not available in 2'
8 Must be ordered with 2230TD, 2750T or 2765T Option
9 Excludes Emergency Battery Pack 'EF' Option. Excludes DALI, DALIP and Lutron (LEC) Dimming Drivers
10 Add suffix /V to replace all 2" non-feed canopy covers with 5" canopy covers. FA1/V = 51" suspension kit w/ 5" canopies; canopies and feed cord are supplied in white regardless of fixture color unless otherwise specified.
11 EF - 10W battery powered driver. Provides a minimum of 90 minutes of emergency lighting. Inverter-Compatible. Provided by others.
12 Only applicable when specified with Emergency/Nightlight.
13 Contact Factory for pattern configurations. Approval drawings required.
14 Includes Luminaire Canopy Box.

NX In-Fixture Control Options:

15 Not available for row mounting. Only available with 0-10V Driver options. Contact factory for Length restrictions.
16 Refer to NX Integrated Controls Reference Table for Functionality of Options.
17 NX Sensors with Bluetooth, BLE, provides remote commission only.

© 2021 Litecontrol, a division of Hubbell Lighting, Inc. Specifications subject to change without notice.
65 Spring Street Plympton, MA 02367 / Tel 781.294.0100 / Website www.litecontrol.com

HUBBELL Lighting

DATE: | LOCATION:
TYPE: L27/L27E | PROJECT:
CATALOG #:

4L-P-D

MOD™ 3 LED PENDANT DIRECT

CONTROLS

NX DISTRIBUTED™ INTELLIGENCE

NX Distributed Intelligence™ Lighting Controls:

Supports both indoor and outdoor applications in a variety of deployment options- wired, wireless, hybrid.
Integrates with and enables a wide array of luminaires including those with SpectraSync Color Tuning Technology.

NX INTEGRATED CONTROLS REFERENCE								
NX Option	Sensor	Networkable	Scheduling	Occupancy	Daylight Harvesting	0–10V Dimming	On/off Control	Bluetooth® App Programming
NX Standalone								
NXS	NXSMP-SMI	No	Yes	Yes	Yes	Yes	Yes	Yes
NX Networked – Wired								
NXE	N/A	Yes	Yes	No	No	Yes	Yes	Requires NXBTC/R [1]
NXES	NXSMP-SMI	Yes	Yes	Yes	Yes	Yes	Yes	Yes
NX Networked – Wireless								
NXSW	NXSMP-SMI	Yes	Yes	Yes	Yes	Yes	Yes	Yes
NXWE [2]	N/A	Yes	Yes	No	No	Yes	Yes	No[3]
NX Networked – Wired/Wireless								
NXSWD	NXSMP-SMI	Yes	Yes	Yes	Yes	Yes	Yes	Yes
NXWD	N/A	Yes	Yes	No	No	Yes	Yes	Requires NXBTC/R [1,3]

1 NXBTC/R needs to be plugged into an available NX SmartPort™ on the fixture network
2 Programming via App requires factory assistance
3 To program NXWE option, need to consult factory. If connected to an area controller, programming can be done from that

SpectraSync™ Color Tuning Technology:

Control your space based on the needs of the application, specific activities throughout the day and preferences of the occupants with distinct SpectraSync™ Color Tuning Technologies.

SpectraSync™ Color Tuning Technology

SPECTRASYNC COLOR TUNING TECHNOLOGY		
Mode	Kelvin Range	Description
Dim to Warm	2200K-3000K	Mimics the familiar warming effect that occurs with traditional incandescent sources as they are dimmed
Tunable White	2700K-5000K 2700K-6500K	Offers users the ability to tailor CCT to their personal preference, enhancing task visibility, material and colors or the aesthetics of the space
Scheduled White	2700K-5000K 2700K-6500K	Mimics the rhythm of natural light or follows an alternative user-defined schedule throughout the day, enhancing an occupant's mood and well-being

SpectraSync Tunable White

Available in two options: 2750T (2700K–5000K) or 2765T (2700K–6500K).
Requires two 0–10V controllers, one for intensity and one for CCT.
Minimum 5% dimming.

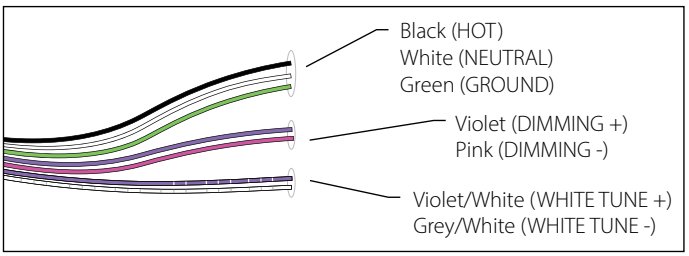

SpectraSync Tunable White luminaires are provided with two 0–10V circuits. The violet and pink circuit is for wiring to any qualified 0–10V controller for dimming. The violet/white and grey/white circuit is for wiring to any qualified 0–10V controller for Tunable White CCT control.

Controller Manufacturer Data

SpectraSync Tunable White was designed to be used with sinking style dimmers (provided by others) and is compatible with:

- Hubbell Control Solutions (HCS): NX Distributed Intelligence™ Room Controllers (NXRC) and In-fixture Controllers (NXFM)
- Lutron: DVTV, DVSTV, and NFTV dimmers
- Wattstopper: ADF120277 and CD4BL (Titan) dimmers

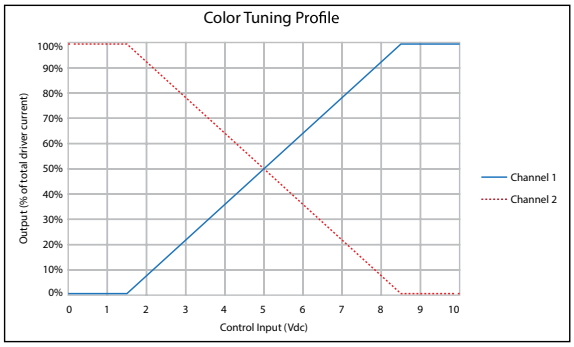

NX Design & Application Guide
NX Brochure
SpectraSync
NX Solutions Guide

© 2021 Litecontrol, a division of Hubbell Lighting, Inc. Specifications subject to change without notice.
65 Spring Street Plympton, MA 02367 / Tel 781.294.0100 / Website www.litecontrol.com

DATE: LOCATION:
TYPE: L27/L27E PROJECT:
CATALOG #:

4L-P-D

MOD™ 3 LED PENDANT DIRECT

PERFORMANCE DATA TABLE

The table below shows the delivered lumens for the various lumen outputs. Use this chart in connection with the output multiplier capability to deliver any output required.

Nomenclature	Lumens/Ft	W/Ft	Efficacy
Downlight			
D030 (min)	300	2.6	118
D035	350	3.0	118
D040	400	3.4	118
D045	450	3.8	118
D050	500	4.2	118
D055	550	4.7	117
D060	600	5.1	117
D065	650	5.6	116
D070	700	6.1	116
D075	750	6.5	115
D080	800	7.0	115
D085	850	7.5	113
D090	900	7.9	113
D095	950	8.5	112
D100	1000	9.0	112
D105	1050	9.4	111
D110 (max)	1100	10.0	110

(wattage may vary up to 5% from published)

Output Restrictions

Driver options listed below are not available for the output and length as shown.

Restrictions - Direct		Output LPA						
		300	350	400	450	500	950	1000
Length (feet)	2	LEC, DALI, 347V	LEC, DALI, 347V	DALI, 347V	DALI, 347V	DALI, 347V	LEC	LEC
	3	DALI, 347V	DALI, 347V				LEC	LEC
	4						LEC	LEC
	5						LEC	LEC
	6						LEC	LEC
	8						LEC	LEC

Output Multiplier Table

Photometrics for the 4L are published here at a nominal 3500K temperature. This table may be used to approximate the lumen values at different Kelvin temperatures. Power consumption would stay the same.

Option	2700K	3000K	3500K	4000K	5000K	2700K 90 CRI	3000K 90 CRI	3500K 90 CRI	4000K 90 CRI	5000K 90 CRI
SOF	0.95	0.98	1.00	1.03	1.05	0.83	0.85	0.88	0.90	0.93
REG	0.73	0.75	0.77	0.79	0.81	0.64	0.65	0.68	0.69	0.72
BWO	0.67	0.69	0.70	0.72	0.76	0.63	0.53	0.47	0.42	0.39
ASYM	0.95	0.98	1.00	1.03	1.05	0.83	0.85	0.88	0.90	0.93
BAT	0.95	0.98	1.00	1.03	1.05	0.83	0.85	0.88	0.90	0.93
DRP	0.95	0.98	1.00	1.03	1.05	0.83	0.85	0.88	0.90	0.93
LPAD	0.86	0.88	0.90	0.93	0.95	0.75	0.77	0.79	0.81	0.84

© 2021 Litecontrol, a division of Hubbell Lighting, Inc. Specifications subject to change without notice.
65 Spring Street Plympton, MA 02367 / Tel 781.294.0100 / Website www.litecontrol.com

LITECONTROL
making light work™

DATE: | LOCATION:
TYPE: L27/L27E | PROJECT:
CATALOG #:

4L-P-D

MOD™ 3 LED PENDANT DIRECT

DIMENSIONS

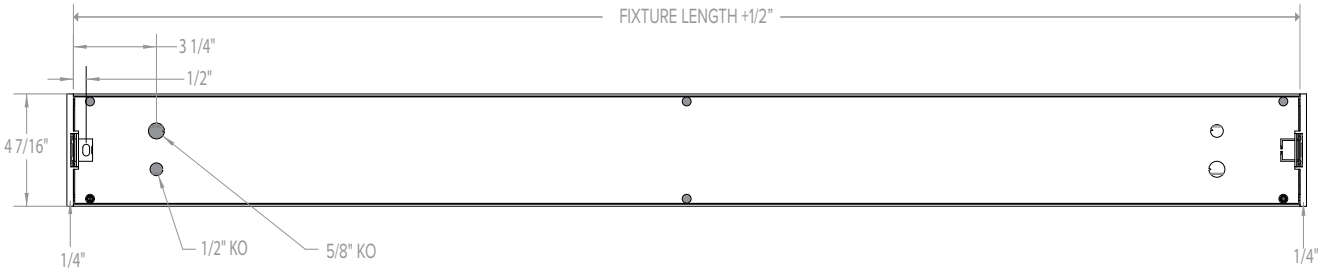

INDIVIDUAL MOUNTING

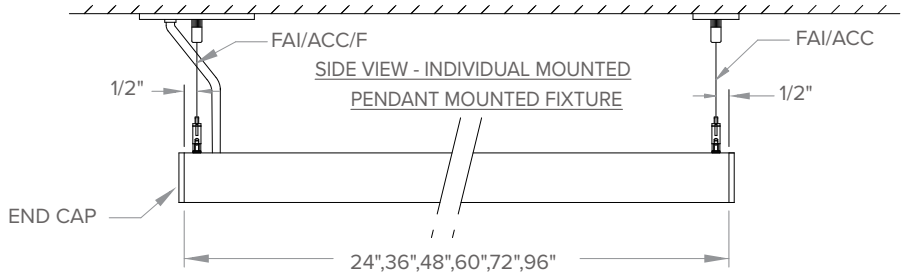

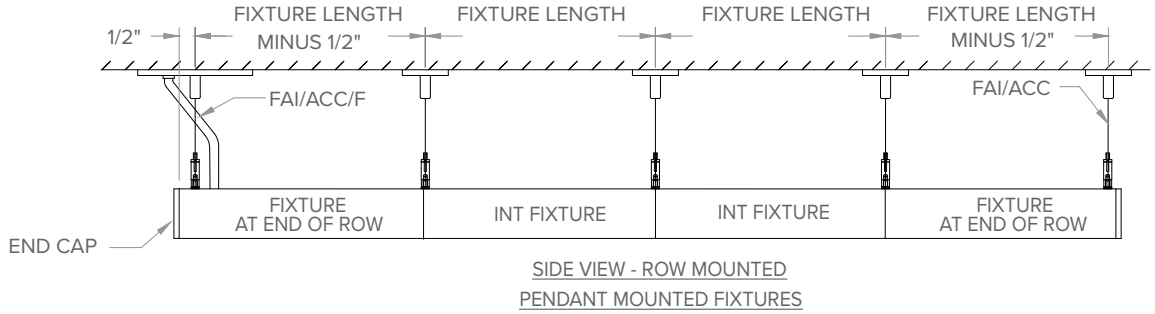

ROW MOUNTING

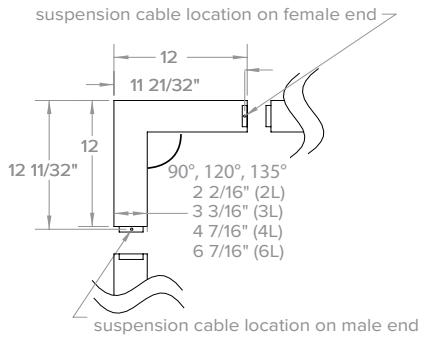

PATTERNS

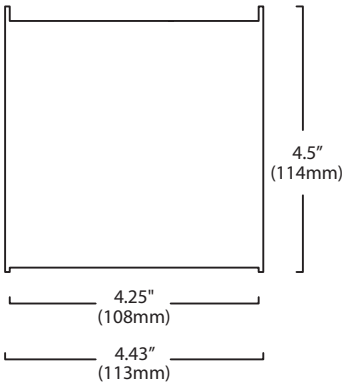

END CAP VIEW

© 2021 Litecontrol, a division of Hubbell Lighting, Inc. Specifications subject to change without notice.
65 Spring Street Plympton, MA 02367 / Tel 781.294.0100 / Website www.litecontrol.com

HUBBELL Lighting

HUBBELL Outdoor Lighting

DATE: | LOCATION:

TYPE: P1 | PROJECT:

CATALOG #:

RATIO Series

AREA/SITE LIGHTER

FEATURES

- Low profile LED area/site luminaire with a variety of IES distributions for lighting applications such as retail, commercial and campus parking lots
- Featuring Micro Strike Optics which maximizes target zone illumination with minimal losses at the house-side, reducing light trespass issues
- Visual comfort standard
- Compact and lightweight design with low EPA
- 3G rated for high vibration applications including bridges and overpasses
- Control options including photo control, occupancy sensing, NX Distributed Intelligence™ and 7-Pin with networked controls
- Best in class surge protection available

c UL us IP66 DLC LISTED DLC PREMIUM BUY AMERICAN SOLUTIONS

See Certification Specifications

RELATED PRODUCTS

Airo | Cimarron LED | Ratio Family

CONTROL TECHNOLOGY

SiteSync LIGHTING CONTROL | NX DISTRIBUTED™ INTELLIGENCE | wiSCAPE™

SPECIFICATIONS

CONSTRUCTION

- Rectilinear form mimics the traditional shoebox form factor keeping a similar but updated style and appearance, ideal for retrofit applications
- Die-cast housing with hidden vertical heat fins that are optimal for heat dissipation while keeping a clean smooth outer surface
- Corrosion resistant, die-cast aluminum housing with powder coat paint finish

OPTICS

- Entire optical aperture illuminates to create a larger luminous surface area resulting in a low glare appearance without sacrificing optical performance
- 80, 160, 320 or 480 midpower LEDs
- 3000K, 4000K or 5000K (70 CRI) CCT
- Zero uplight at 0 degrees of tilt
- Field rotatable optics

INSTALLATION

- Standard square arm mount, compatible with B3 drill pattern
- Optional universal mounting block for ease of installation during retrofit applications. Available as an option or accessory for square and round poles.
- Knuckle arm fitter option available for 2-3/8" OD tenon. Max tilt of 60 degrees with 4 degree adjustable increments. (Restrictions apply for 7-pin options)

ELECTRICAL

- Universal 120-277 VAC or 347-480 VAC input voltage, 50/60 Hz

ELECTRICAL (CONTINUED)

- Ambient operating temperature -40˚C to 40˚C
- Drivers have greater than 90% power factor and less than 20% THD
- LED drivers have output power over-voltage, over-current protection and short circuit protection with auto recovery
- Field replaceable surge protection device provides 20kA protection meeting ANSI/IEEE C62.41.2 Category C High and Surge Location Category C3; Automatically takes fixture off-line for protection when device is compromised

CONTROLS

- Photo control, occupancy sensor and wireless available for complete on/off and dimming control
- 7-pin ANSI C136.41-2013 photocontrol receptacle option available for twist lock photocontrols or wireless control modules (control accessories sold separately)
- 0- 10 V Dimming Drivers are standard and dimming leads are extended out of the luminaire unless control options require connection to the dimming leads. Must specify if wiring leads are to be greater than the 6" standard
- SiteSync™ wireless control system is available via 7-pin See ordering information and details at: www.hubbelllighting.com/sitesync
- NX Distributed Intelligence™ available with in fixture wireless control module, features dimming and occupancy sensor
- wiSCAPE® available with in fixture wireless control module, features dimming and occupancy sensor via 7-pin

CERTIFICATIONS

- DLC® (DesignLights Consortium Qualified), with some Premium Qualified configurations. Please refer to the DLC website for specific product qualifications at www.designlights.org
- Listed to UL1598 and CSA C22.2#250.0-24 for wet locations and 40˚C ambient temperatures
- 3G rated for ANSI C136.31 high vibration applications
- Fixture is IP66 rated
- Meets IDA recommendations using 3K CCT configuration at 0 degrees of tilt
- This product qualifies as a "designated country construction material" per FAR 52.225-11 Buy American-Construction Materials under Trade Agreements effective 04/23/2020. See Buy American Solutions

WARRANTY

- 5 year limited warranty
- See HLI Standard Warranty for additional information

KEY DATA	
Lumen Range	3,000–48,000
Wattage Range	25–340
Efficacy Range (LPW)	118–155
Fixture Projected Life (Hours)	L70>60K
Weights lbs. (kg)	13.5–24 (6.1–10.9)

© 2021 Hubbell Outdoor Lighting, a division of Hubbell Lighting, Inc. Specifications subject to change without notice.
701 Millennium Blvd • Greenville, SC 29607 / Tel 864.678.1000 / Website www.hubbelloutdoor.com

HUBBELL Lighting

HUBBELL Outdoor Lighting

DATE: | LOCATION:

TYPE: P1 | PROJECT:

CATALOG #:

RATIO SERIES

AREA/SITE LIGHTER

ORDERING GUIDE

Example: RAR1-80L-25-3K7-2-UNV-ASQ-BL-NXWE-BC

CATALOG # RAR2-480L-185-4K7-4W-UNV-A_U-DBT

ORDERING INFORMATION

Series		# LEDs - Wattage		CCT/CRI		Distribution		Optics Rotation		Voltage	
RAR1	Ratio Area Size 1	**80L-25**	25W - 3,000 Lumens	**3K7**	3000K, 70 CRI	**2**	IES TYPE II	Blank for no rotation		**UNV**	Universal 120-277V
		80L-39	39W -5,200 Lumens	**4K7**	4000K, 70 CRI	**3**	IES TYPE III	**L**	Optic rotation left	**120**	120V
		80L-50	50W - 6,000 Lumens	**5K7**	5000K, 70 CRI	**4W**	IES TYPE IV	**R**	Optic rotation right	**208**	208V
		160L-70	70W - 9,000 Lumens			**5QW**	IES TYPE V			**240**	240V
		160L-100	100W - 12,000 Lumens							**277**	277V
		160L-115	115W - 15,000 Lumens							**347**	347V
		160L-135	135W - 18,000 Lumens							**480**	480V
RAR2	Ratio Area Size 2	**320L-110**	110W - 15,000 Lumens								
		320L-140	140W - 18,000 Lumens								
		320L-165	165W - 21,000 Lumens								
		480L-185	185W - 24,000 Lumens								
		480L-210	210W - 27,000 Lumens								
		480L-240	240W - 30,000 Lumens								
		480L-255	255W - 36,000 Lumens								
		480L-295	295W - 42,000 Lumens								
		480L-340	340W - 48,000 Lumens								

Mounting	
ASQ	Arm mount for square pole/flat surface
ASQU	Universal arm mount for square pole/flat surface
Mounting Round Poles	
A_	Arm mount for round pole[1]
A_U	Universal arm mount for round pole[1]
Mounting Other	
WB	Wall bracket
MAF	Mast arm fitter for 2-3/8" OD horizontal arm
K	Knuckle

Color	
BLT	Black Matte Textured
BLS	Black Gloss Smooth
DBT	Dark Bronze Matte Textured
DBS	Dark Brone Gloss Smooth
GTT	Graphite Matte Textured
LGS	Light Grey Gloss Smooth
PSS	Platinum Silver Smooth
WHT	White Matte Textured
WHS	White Gloss Smooth
VGT	Verde Green Textured
Color Option	
CC	Custom Color

Control Options Network	
NXWE	NX Wireless Enabled (module + radio)
NXSPW_F	NX Wireless, PIR Occ. Sensor, Daylight Harvesting [4]
NXSP_F	NX, PIR Occ. Sensor, Daylight Harvesting [4]
Control Options Other	
SCP-40F	Programmable occupancy sensor [3]
7PR	7-Pin twist lock receptacle
7PR-SC	7-Pin receptacle with shorting cap
7PR-MD40F	Low voltage sensor for 7PR
7PR-TL	7-Pin PCR with photocontrol
Sensors	
BTS_F	Bluetooth Programmable, PIR Occupancy/Daylight Sensor, 360° lens [4]
BTSO_F	Bluetooth Programmable, PIR Occupancy/Daylight Sensor, 360° lens, up to 12' mounting height [5]

Options	
BC	Backlight control
F	Fusing (must specify voltage)
TB	Terminal block
2PF	2 power feed with 2 drivers[2]

Notes:

1. Replace "_" with "3" for 3.5"-4.13" OD pole, "4" for 4.18"-5.25" OD pole, "5" for 5.5"-6.5" OD pole
2. Not available with 25, 50, 255, 295 & 340W configurations
3. At least one SCPREMOTE required to program SCP motion sensor
4. Replace "_" with "14" for up to 14' mounting height, "40F" for 15-40' mounting height
5. Replace "_" with "12" for up to 12' mounting height

STOCK ORDERING INFORMATION

Catalog Number	Lumens	Wattage	LED Count	CCT/CRI	Voltage	Distribution	Mounting	Finish
RAR1-100-4K-3	12,000	100W	160L	4000K/70CRI	120-277V	Type 3	Square Arm	Bronze
RAR1-100-4K-4W	12,000	100W	160L	4000K/70CRI	120-277V	Type 4W	Square Arm	Bronze
RAR1-135-4K-3	18,000	135W	160L	4000K/70CRI	120-277V	Type 3	Square Arm	Bronze
RAR1-135-4K-4W	18,000	135W	160L	4000K/70CRI	120-277V	Type 4W	Square Arm	Bronze
RAR2-165-4K-3	21,000	165W	320L	4000K/70CRI	120-277V	Type 3	Square Arm	Bronze
RAR2-165-4K-4W	21,000	165W	320L	4000K/70CRI	120-277V	Type 4W	Square Arm	Bronze

© 2021 Hubbell Outdoor Lighting, a division of Hubbell Lighting, Inc. Specifications subject to change without notice.
701 Millennium Blvd • Greenville, SC 29607 / Tel 864.678.1000 / Website www.hubbelloutdoor.com

HUBBELL Lighting

DATE: LOCATION:

TYPE: PROJECT:

CATALOG #:

RATIO SERIES

AREA/SITE LIGHTER

OPTIONS AND ACCESSORIES - STOCK (ORDERED SEPARATELY)

	Catalog Number	Description
☐	**RARRPA3DB**	Round pole adapter 3.5" to 4.13" for ASQ arm, 3.5" to 4.13" OD pole, dark bronze finish
☐	**RARA3UDB**	Universal mount for square pole or round pole 3.5" to 4.13", dark bronze finish
☐	**RARBC80L**	Ratio blacklight control 80L
☐	**RARBC160L**	Ratio blacklight control 160L
☐	**RARBC320L**	Ratio blacklight control 320L
☐	**RARBC480L**	Ratio blacklight control 480L

ACCESSORIES AND REPLACEMENT PARTS - MADE TO ORDER

	Catalog Number	Description
☐	**RAR–ASQU–XX**	Universal arm mount for square pole/flat surface[2]
☑	**RAR–A_U-XX**	Universal arm mount for round poles[1,2]
☐	**RAR–RPA_–XX**	Round pole adapter[1, 2]
☐	**SETAVP-XX**	4" square pole top tenon adapter, 2 3/8" OD slipfitter[2]
☐	**RETAVP-XX**	4" round pole top tenon adapter; 2 3/8" OD slipfitter for max. Four fixtures (90o); order 4" round pole adapters separately[2]
☐	**BIRD–SPIKE–3**	Ratio size 1 bird deterrent/spikes
☐	**BIRD–SPIKE–4**	Ratio size 2 bird deterrent/spikes
☐	**RARWB–XX**	Wall bracket - use with Mast Arm Fitter or Knuckle[2]

1 Replace "_" with "3" for 3.5"-4.13" OD pole, "4" for 4.18"-5.25" OD pole, "5" for 5.5"-6.5" OD pole

2 Replace "XX" with desired color/paint finish

CONTROLS

Control Options	
Standalone	
SW7PR	SiteSync™ on fixture module via 7PR
SWUSB	SiteSync™ Software on USB
SWTAB	SiteSync™ Windows Tablet
SWBRG	SiteSync™ Wireless Bridge Node
SWFC	SiteSync™ Field Commission Serve
SCPREMOTE	Order at least one per project location to program and control
Networked – Wireless	
WIR-RME-L	wiSCAPE External Fixture Module[1,2]
NX Networked – Wireless	
NXOFM-1R1D-UNV	NX Wireless, Daylight Harvesting, BLE, 7 pin twisted lock

Notes:

1 Works with external networked photosensor

2 wiSCAPE Gateway required for system programming

© 2021 Hubbell Outdoor Lighting, a division of Hubbell Lighting, Inc. Specifications subject to change without notice.
701 Millennium Blvd • Greenville, SC 29607 / Tel 864.678.1000 / Website www.hubbelloutdoor.com

DATE: LOCATION:

TYPE: PROJECT:

CATALOG #:

RATIO SERIES

AREA/SITE LIGHTER

PERFORMANCE DATA

Description	Nominal Wattage	System Watts	Dist. Type	5K (5000K NOMINAL 70 CRI)					4K (4000K NOMINAL 70 CRI)					3K (3000K NOMINAL 80 CRI)				
				Lumens	LPW	B	U	G	Lumens	LPW	B	U	G	Lumens	LPW	B	U	G
RAR1	25	25.4	2	3438	135	1	0	1	3445	136	1	0	1	3240	128	1	0	1
			3	3460	136	1	0	1	3467	136	1	0	1	3260	128	1	0	1
			4W	3406	134	1	0	1	3412	134	1	0	1	3209	126	1	0	1
			5QW	3483	137	2	0	1	3490	137	2	0	1	3282	129	2	0	1
	39	39	2	5263	139	1	0	2	5273	139	1	0	2	4960	131	1	0	2
			3	5297	139	1	0	2	5308	140	1	0	2	4991	131	1	0	2
			4W	5200	137	1	0	2	5210	137	1	0	2	4900	129	1	0	2
			5QW	5333	140	3	0	1	5344	141	3	0	1	5025	132	3	0	1
	50	49.8	2	6310	127	1	0	2	6323	127	1	0	2	5946	120	1	0	2
			3	6349	128	1	0	2	6362	128	1	0	2	5983	120	1	0	2
			4W	6233	125	1	0	2	6245	126	1	0	2	5873	118	1	0	2
			5QW	6392	129	3	0	1	6405	129	3	0	1	6023	121	3	0	1
	70	68.4	2	9486	139	1	0	2	9505	139	1	0	2	8938	131	1	0	2
			3	9544	140	1	0	2	9563	140	1	0	2	8993	131	1	0	2
			4W	9395	137	1	0	2	9414	138	1	0	2	8853	129	1	0	2
			5QW	9608	140	4	0	2	9628	141	4	0	2	9054	132	4	0	2
	100	90.0	2	11976	133	2	0	2	12000	133	2	0	2	11285	125	2	0	2
			3	12050	134	2	0	2	12074	134	2	0	2	11354	126	2	0	2
			4W	11861	132	2	0	2	11885	132	2	0	2	11177	124	2	0	2
			5QW	12131	135	4	0	2	12155	135	4	0	2	11431	127	4	0	2
	115	109.7	2	15572	142	2	0	2	15494	141	2	0	2	14871	136	2	0	2
			3	15833	144	2	0	2	15754	144	2	0	2	15121	138	2	0	2
			4W	15281	139	2	0	3	15205	139	2	0	3	14623	133	2	0	3
			5QW	15732	143	4	0	2	15653	143	4	0	2	15024	137	4	0	2
	135	133.3	2	17971	135	3	0	3	17881	134	3	0	3	17163	129	3	0	3
			3	18272	137	2	0	2	18181	136	2	0	2	17450	131	2	0	2
			4W	17635	132	2	0	3	17547	132	2	0	3	16876	127	2	0	3
			5QW	18156	136	4	0	2	18065	136	4	0	2	17339	130	4	0	2
RAR2 Performance Data on next page																		

* Lumen values are from photometric test performed in accordance with IESNA LM-79-08. Data is considered to be representative of the configurations shown. Actual performance may differ as a result of end-user environment and application.

© 2021 Hubbell Outdoor Lighting, a division of Hubbell Lighting, Inc. Specifications subject to change without notice.
701 Millennium Blvd • Greenville, SC 29607 / Tel 864.678.1000 / Website www.hubbelloutdoor.com

DATE: LOCATION:

TYPE: PROJECT:

CATALOG #:

RATIO SERIES

AREA/SITE LIGHTER

PERFORMANCE DATA

Description	Nominal Wattage	System Watts	Dist. Type	5K (5000K NOMINAL 70 CRI)					4K (4000K NOMINAL 70 CRI)					3K (3000K NOMINAL 80 CRI)				
				Lumens	LPW	B	U	G	Lumens	LPW	B	U	G	Lumens	LPW	B	U	G
RAR2	110	100.3	2	15326	153	2	0	3	15357	153	2	0	3	14442	144	2	0	3
			3	15421	154	2	0	3	15452	154	2	0	3	14531	145	2	0	3
			4W	15180	151	2	0	2	15210	152	2	0	2	14304	143	2	0	2
			5QW	15525	155	4	0	2	15556	155	4	0	2	14629	146	4	0	2
	140	133.2	2	19395	146	2	0	3	19434	146	2	0	3	18276	137	2	0	3
			3	19515	147	2	0	3	19554	147	2	0	3	18389	138	2	0	3
			4W	19210	144	2	0	3	19248	145	2	0	3	18101	136	2	0	3
			5QW	19647	148	5	0	3	19686	148	5	0	3	18513	139	5	0	3
	165	153.6	2	21651	141	3	0	3	21695	141	3	0	3	20402	133	3	0	3
			3	21785	142	3	0	3	21828	142	3	0	3	20527	134	3	0	3
			4W	21444	140	3	0	3	21487	140	3	0	3	20206	132	3	0	3
			5QW	21932	143	5	0	3	21976	143	5	0	3	20666	135	5	0	3
	185	174.5	2	26046	149	3	0	3	26098	150	3	0	3	24543	141	3	0	3
			3	26207	150	3	0	3	26259	150	3	0	3	24694	142	3	0	3
			4W	25797	148	3	0	4	25849	148	3	0	4	24308	139	3	0	4
			5QW	26384	151	5	0	3	26437	152	5	0	3	24861	143	5	0	3
	210	198.2	2	28848	145	3	0	4	28906	146	3	0	4	27184	137	3	0	4
			3	29027	146	3	0	4	29085	147	3	0	4	27351	138	3	0	4
			4W	28572	144	3	0	4	28630	144	3	0	4	26924	136	3	0	4
			5QW	29222	147	5	0	4	29281	148	5	0	4	27536	139	5	0	4
	240	226.9	2	32087	141	3	0	4	32151	142	3	0	4	30235	133	3	0	4
			3	32285	142	3	0	4	32350	143	3	0	4	30422	134	3	0	4
			4W	31780	140	3	0	4	31844	140	3	0	4	29946	132	3	0	4
			5QW	32503	143	5	0	4	32568	144	5	0	4	30627	135	5	0	4
	255	257.0	2	37040	144	3	0	4	36854	143	3	0	4	35373	138	3	0	4
			3	37660	147	3	0	4	37472	146	3	0	4	35966	140	3	0	4
			4W	36347	141	3	0	5	36166	140	3	0	5	34782	135	3	0	5
			5QW	37420	146	5	0	4	37233	145	5	0	4	35736	139	5	0	4
	295	294.0	2	41733	142	3	0	4	41524	141	3	0	4	39855	136	3	0	4
			3	42432	144	3	0	4	42220	144	3	0	4	40523	138	3	0	4
			4W	40953	139	3	0	5	40748	139	3	0	5	39190	133	3	0	5
			5QW	42162	143	5	0	4	41951	143	5	0	4	40264	137	5	0	4
	340	347.1	2	48392	139	4	0	5	48150	139	4	0	5	46215	133	4	0	5
			3	49203	142	3	0	4	48957	141	3	0	4	46989	135	3	0	4
			4W	47488	137	4	0	5	47261	136	4	0	5	45443	131	4	0	5
			5QW	48889	141	5	0	5	48645	140	5	0	5	46689	135	5	0	5

* Lumen values are from photometric test performed in accordance with IESNA LM-79-08. Data is considered to be representative of the configurations shown. Actual performance may differ as a result of end-user environment and application.

© 2021 Hubbell Outdoor Lighting, a division of Hubbell Lighting, Inc. Specifications subject to change without notice.
701 Millennium Blvd • Greenville, SC 29607 / Tel 864.678.1000 / Website www.hubbelloutdoor.com

HUBBELL Outdoor Lighting

DATE: LOCATION:

TYPE: PROJECT:

CATALOG #:

RATIO SERIES

AREA/SITE LIGHTER

ELECTRICAL DATA

# OF LEDS	Nominal Wattage	Input Voltage	Oper. Current (Amps)	System Power (Watts)
RAR1	25	120	0.21	25.4
		208	0.12	
		240	0.11	
		277	0.09	
	39	120	0.32	38.0
		208	0.18	
		240	0.16	
		277	0.14	
		347	0.11	
		480	0.08	
	50	120	0.42	49.8
		208	0.24	
		240	0.21	
		277	0.18	
	70	120	0.57	68.4
		208	0.33	
		240	0.29	
		277	0.25	
	100	120	0.75	90.0
		208	0.43	
		240	0.38	
		277	0.32	
	115	120	0.91	109.7
		208	0.53	
		240	0.46	
		277	0.40	
		347	0.32	
		480	0.23	
	135	120	1.11	133.3
		208	0.64	
		240	0.56	
		277	0.48	
		347	0.38	
		480	0.28	

# OF LEDS	Nominal Wattage	Input Voltage	Oper. Current (Amps)	System Power (Watts)
RAR2	110	120	0.84	100.3
		208	0.48	
		240	0.42	
		277	0.36	
	140	120	1.11	133.2
		208	0.64	
		240	0.56	
		277	0.48	
	165	120	1.28	153.6
		208	0.74	
		240	0.64	
		277	0.55	
	185	120	1.45	174.5
		208	0.84	
		240	0.73	
		277	0.63	
	210	120	1.65	198.3
		208	0.95	
		240	0.83	
		277	0.72	
	240	120	1.89	226.9
		208	1.09	
		240	0.95	
		277	0.82	
	255	120	2.14	257.0
		208	1.24	
		240	1.07	
		277	0.93	
		347	0.74	
		480	0.54	
	295	120	2.45	294.0
		208	1.41	
		240	1.23	
		277	1.06	
		347	0.85	
		480	0.61	
	340	120	2.89	347.1
		208	1.67	
		240	1.45	
		277	1.25	
		347	1.00	
		480	0.72	

LUMINAIRE AMBIENT TEMPERATURE FACTOR (LATF)

Ambient Temperature		Lumen Multiplier
0° C	32° F	1.03
10° C	50° F	1.01
20° C	68° F	1.00
25° C	77° F	1.00
30° C	86° F	0.99
40° C	104° F	0.98
50° C	122° F	0.97

Use these factors to determine relative lumen output for average ambient temperatures from 0-40°C (32-104°F).

PROJECTED LUMEN MAINTENANCE

Ambient Temperature	OPERATING HOURS					
	0	25,000	TM-21-11 L90 36,000	50,000	100,000	L70 (Hours)
25°C / 77°F	1.00	0.97	0.95	0.93	0.86	238,000
40°C / 104°F	0.99	0.96	0.95	0.93	0.85	225,000

© 2021 Hubbell Outdoor Lighting, a division of Hubbell Lighting, Inc. Specifications subject to change without notice.
701 Millennium Blvd • Greenville, SC 29607 / Tel 864.678.1000 / Website www.hubbelloutdoor.com

HUBBELL Lighting

HUBBELL Outdoor Lighting

DATE: | LOCATION:

TYPE: | PROJECT:

CATALOG #:

RATIO SERIES

AREA/SITE LIGHTER

DIMENSIONS

RAR1

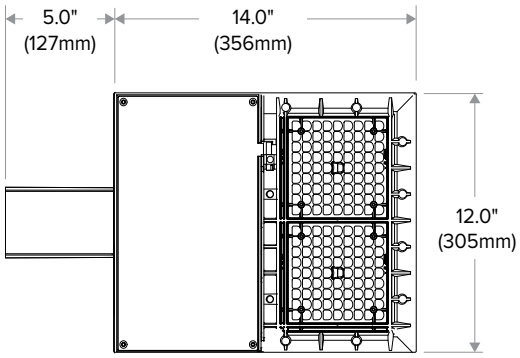

RAR2

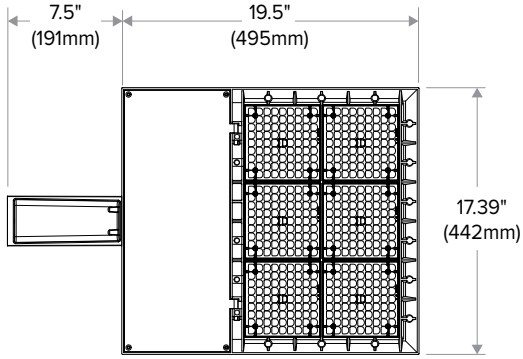

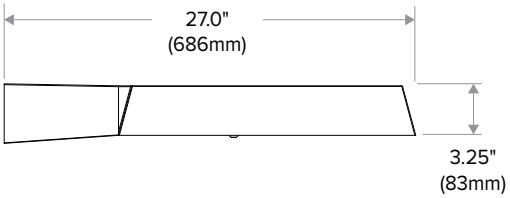

ADDITIONAL INFORMATION

MOUNTING

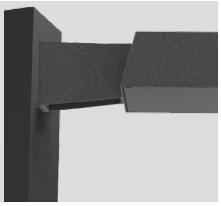

Arm Mount – Fixture ships with integral arm for ease of installation. Compatible with Hubbell Outdoor B3 drill pattern.

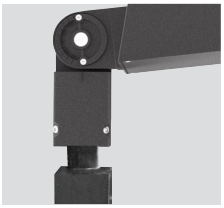

Knuckle – Knuckle mount 15° aiming angle increments for precise aiming and control, fits 2-3/8" tenons or pipes.

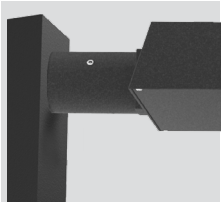

MAF – Fits 2-3/8" OD arms Roadway applications.

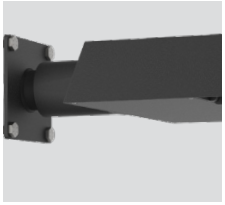

Wall Mount – Wall mount bracket designed for building mount applications.

Universal Mounting – Universal mounting block for ease of installation. Compatible with drill patterns from 2.5" to 4.5"

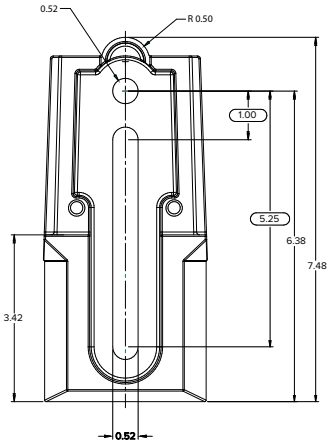

© 2021 Hubbell Outdoor Lighting, a division of Hubbell Lighting, Inc. Specifications subject to change without notice.
701 Millennium Blvd • Greenville, SC 29607 / Tel 864.678.1000 / Website www.hubbelloutdoor.com

HUBBELL Lighting

RATIO SERIES

AREA/SITE LIGHTER

EPA

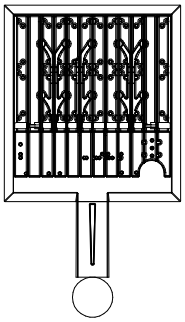

EPA: .607

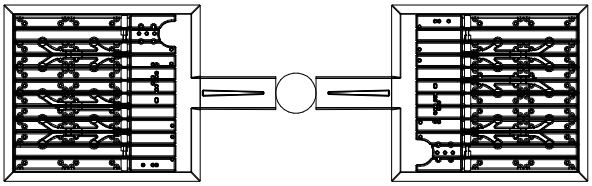

EPA: 1.214

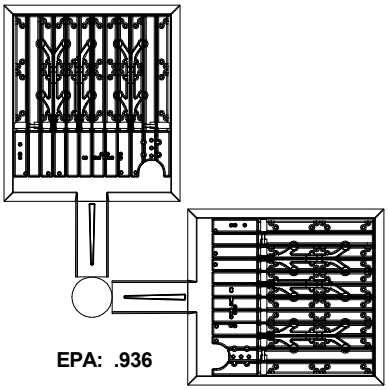

EPA: .936

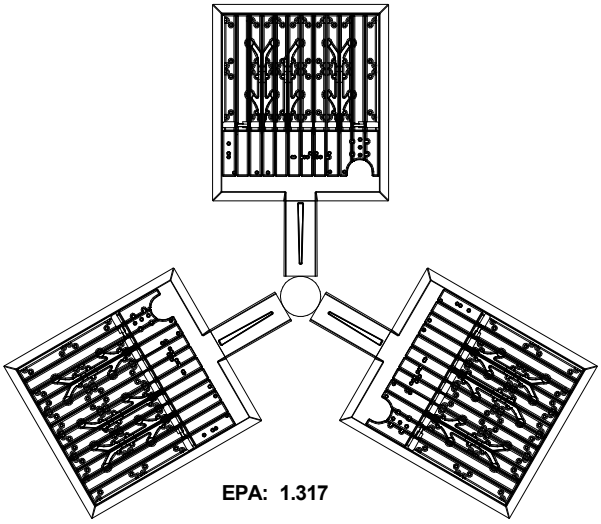

EPA: 1.317

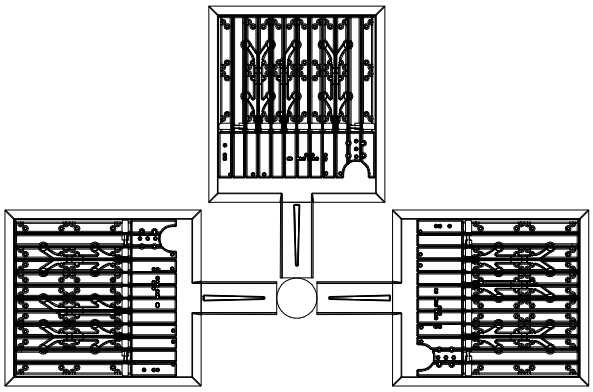

EPA: 1.486

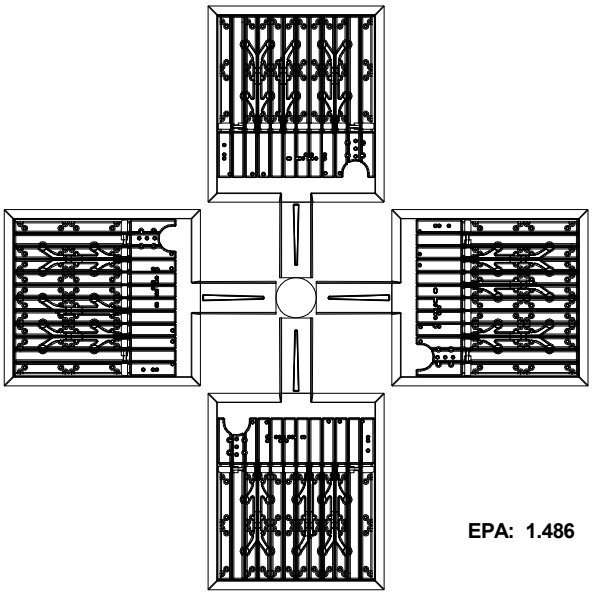

EPA: 1.486

© 2021 Hubbell Outdoor Lighting, a division of Hubbell Lighting, Inc. Specifications subject to change without notice.
701 Millennium Blvd • Greenville, SC 29607 / Tel 864.678.1000 / Website www.hubbelloutdoor.com

RATIO SERIES

AREA/SITE LIGHTER

ADDITIONAL INFORMATION (CONT'D)

ARM MOUNT (ASQ)
Compatible with Pole drill pattern B3

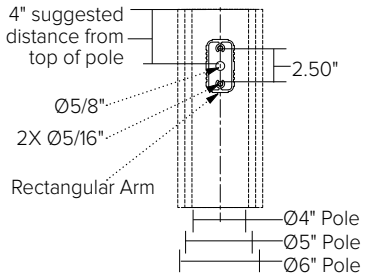

UNIVERSAL MOUNTING (ASQU)
Compatible with pole drill pattern S2

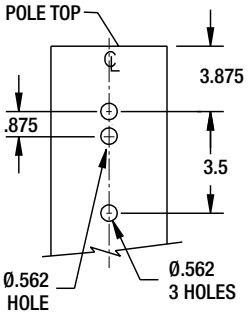

SITESYNC 7-PIN MODULE

SW7PR

- SiteSync features in a new form
- Available as an accessory for new construction or retrofit applications (with existing 7-Pin receptacle)

PROGRAMMED CONTROLS

ADD-AutoDim Timer Based Options

- Light delay options from 1-9 hours after the light is turned on to dim the light by 10-100%. To return the luminaire to its original light level there are dim return options from 1-9 hours after the light has been dimmed previously.

EX: ADD-6-5-R6

ADD Control Options	Configurations Choices	Example Choice Picked
Auto-Dim Options	1-9 Hours	6
Auto-Dim Brightness	0-9% Brightness	5
Auto-Dim Return	Delay 0-9 Hours	R6

ADT-AutoDim Time of Day Based Option

- Light delay options from 1AM-9PM after the light is turned on to dim the light by 10-100%. To return the luminaire to its original light level there are dim return options from 1AM-9PM after the light has been dimmed previously.

EX: ADT-6-5-R6

ADD Control Options	Configurations Choices	Example Choice Picked
Auto-Dim Options	12-3 AM and 6-11 PM	6
Auto-Dim Brightness	0-9% Brightness	5
Auto-Dim Return	12-6 AM and 9-11P	R6

© 2021 Hubbell Outdoor Lighting, a division of Hubbell Lighting, Inc. Specifications subject to change without notice.
701 Millennium Blvd • Greenville, SC 29607 / Tel 864.678.1000 / Website www.hubbelloutdoor.com

RATIO SERIES

AREA/SITE LIGHTER

ADDITIONAL INFORMATION (CONT'D)

NXSP-14F

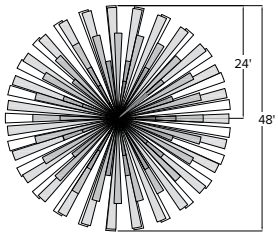

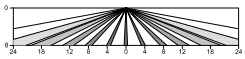

Sensor Lens Coverage and Detection Patterns
When Mounted at 8ft with Low Mount Lens

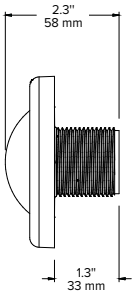

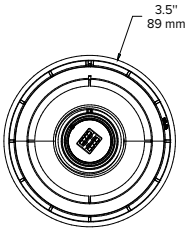

NXSP-30F

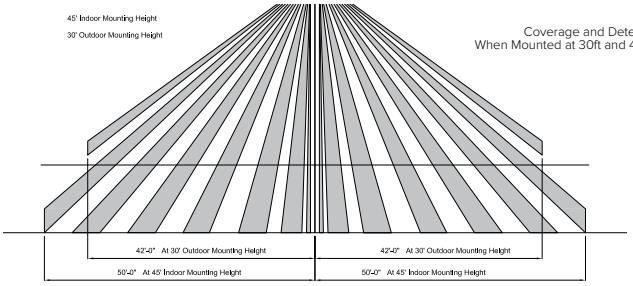

Coverage and Detection Patterns
When Mounted at 30ft and 45ft with Standard Lens

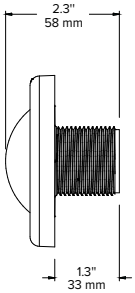

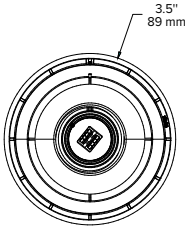

SCP-40F

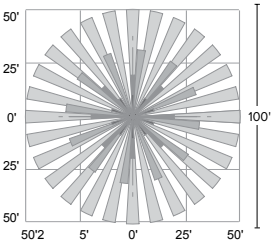

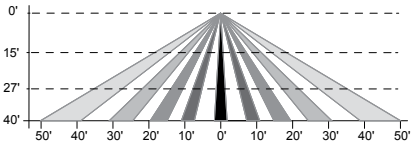

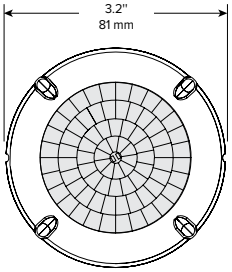

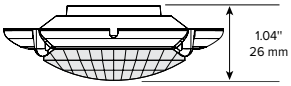

RAR1 EPA

RAR-1	
EPA at 0˚	EPA at 30˚
.45ft.^{2} .13m^2	.56ft.^{2} .17m^2

RAR2 EPA

RAR-2	
EPA at 0˚	EPA at 30˚
.55ft.^{2} .17m^2	1.48ft.^{2} .45m^2

SHIPPING

Catalog Number	G.W(kg)/ CTN	Carton Dimensions		
		Length Inch (cm)	Width Inch (cm)	Height Inch (cm)
RAR1	15 (6.8)	20.75 (52.7)	15.125 (38.4)	6.9375 (17.6)
RAR2	19 (8.6)	25 (63.5)	15.125 (38.4)	6.9375 (17.6)

© 2021 Hubbell Outdoor Lighting, a division of Hubbell Lighting, Inc. Specifications subject to change without notice.
701 Millennium Blvd • Greenville, SC 29607 / Tel 864.678.1000 / Website www.hubbelloutdoor.com

RATIO SERIES

AREA/SITE LIGHTER

ADDITIONAL INFORMATION (CONT'D)

RATIO HOUSE SIDE SHIELD

RARx HSS-90-B-xx

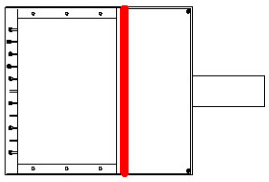

RARx HSS-270-BSS-xx

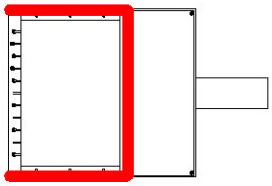

RARx HSS-360-xx

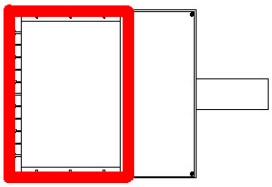

RARx HSS-90-F-xx

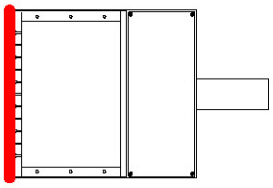

RARx HSS-270-FSS-xx

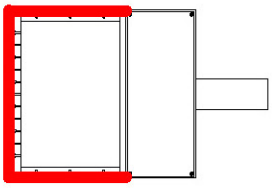

RARx HSS-90-S-xx

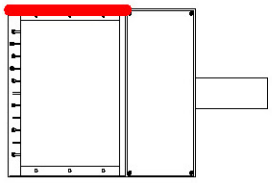

RARx HSS-270-FSB-xx

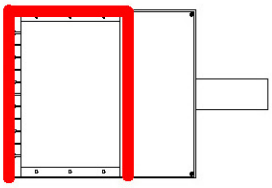

RARx HSS-90-S-xx

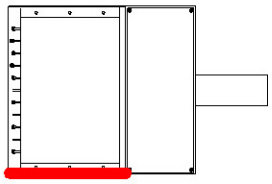

RARx HSS-270-FSB-xx

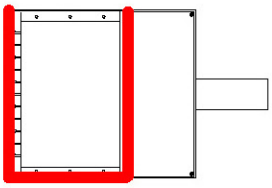

USE OF TRADEMARKS AND TRADE NAMES

All product and company names, logos and product identifies are trademarks ™ or registered trademarks ® of Hubbell Lighting, Inc. or their respective owners. Use of them does not necessarily imply any affiliation with or endorsement by such respective owners.

© 2021 Hubbell Outdoor Lighting, a division of Hubbell Lighting, Inc. Specifications subject to change without notice.
701 Millennium Blvd • Greenville, SC 29607 / Tel 864.678.1000 / Website www.hubbelloutdoor.com

HUBBELL Outdoor Lighting

DATE: | LOCATION:

TYPE: P2 | PROJECT:

CATALOG #:

RATIO Series

AREA/SITE LIGHTER

FEATURES

- Low profile LED area/site luminaire with a variety of IES distributions for lighting applications such as retail, commercial and campus parking lots
- Featuring Micro Strike Optics which maximizes target zone illumination with minimal losses at the house-side, reducing light trespass issues
- Visual comfort standard
- Compact and lightweight design with low EPA
- 3G rated for high vibration applications including bridges and overpasses
- Control options including photo control, occupancy sensing, NX Distributed Intelligence™ and 7-Pin with networked controls
- Best in class surge protection available

c UL us IP66 DLC LISTED DLC PREMIUM BUY AMERICAN SOLUTIONS

See Certification Specifications

RELATED PRODUCTS

Airo | Cimarron LED | Ratio Family

CONTROL TECHNOLOGY

SiteSync LIGHTING CONTROL | NX DISTRIBUTED™ INTELLIGENCE | wiSCAPE™

SPECIFICATIONS

CONSTRUCTION

- Rectilinear form mimics the traditional shoebox form factor keeping a similar but updated style and appearance, ideal for retrofit applications
- Die-cast housing with hidden vertical heat fins that are optimal for heat dissipation while keeping a clean smooth outer surface
- Corrosion resistant, die-cast aluminum housing with powder coat paint finish

OPTICS

- Entire optical aperture illuminates to create a larger luminous surface area resulting in a low glare appearance without sacrificing optical performance
- 80, 160, 320 or 480 midpower LEDs
- 3000K, 4000K or 5000K (70 CRI) CCT
- Zero uplight at 0 degrees of tilt
- Field rotatable optics

INSTALLATION

- Standard square arm mount, compatible with B3 drill pattern
- Optional universal mounting block for ease of installation during retrofit applications. Available as an option or accessory for square and round poles.
- Knuckle arm fitter option available for 2-3/8" OD tenon. Max tilt of 60 degrees with 4 degree adjustable increments. (Restrictions apply for 7-pin options)

ELECTRICAL

- Universal 120-277 VAC or 347-480 VAC input voltage, 50/60 Hz

ELECTRICAL (CONTINUED)

- Ambient operating temperature -40˚C to 40˚C
- Drivers have greater than 90% power factor and less than 20% THD
- LED drivers have output power over-voltage, over-current protection and short circuit protection with auto recovery
- Field replaceable surge protection device provides 20kA protection meeting ANSI/IEEE C62.41.2 Category C High and Surge Location Category C3; Automatically takes fixture off-line for protection when device is compromised

CONTROLS

- Photo control, occupancy sensor and wireless available for complete on/off and dimming control
- 7-pin ANSI C136.41-2013 photocontrol receptacle option available for twist lock photocontrols or wireless control modules (control accessories sold separately)
- 0- 10 V Dimming Drivers are standard and dimming leads are extended out of the luminaire unless control options require connection to the dimming leads. Must specify if wiring leads are to be greater than the 6" standard
- SiteSync™ wireless control system is available via 7-pin See ordering information and details at: www.hubbelllighting.com/sitesync
- NX Distributed Intelligence™ available with in fixture wireless control module, features dimming and occupancy sensor
- wiSCAPE® available with in fixture wireless control module, features dimming and occupancy sensor via 7-pin

CERTIFICATIONS

- DLC® (DesignLights Consortium Qualified), with some Premium Qualified configurations. Please refer to the DLC website for specific product qualifications at www.designlights.org
- Listed to UL1598 and CSA C22.2#250.0-24 for wet locations and 40˚C ambient temperatures
- 3G rated for ANSI C136.31 high vibration applications
- Fixture is IP66 rated
- Meets IDA recommendations using 3K CCT configuration at 0 degrees of tilt
- This product qualifies as a "designated country construction material" per FAR 52.225-11 Buy American-Construction Materials under Trade Agreements effective 04/23/2020. See Buy American Solutions

WARRANTY

- 5 year limited warranty
- See HLI Standard Warranty for additional information

KEY DATA	
Lumen Range	3,000–48,000
Wattage Range	25–340
Efficacy Range (LPW)	118–155
Fixture Projected Life (Hours)	L70>60K
Weights lbs. (kg)	13.5–24 (6.1–10.9)

© 2021 Hubbell Outdoor Lighting, a division of Hubbell Lighting, Inc. Specifications subject to change without notice.
701 Millennium Blvd • Greenville, SC 29607 / Tel 864.678.1000 / Website www.hubbelloutdoor.com

HUBBELL Lighting

HUBBELL Outdoor Lighting

DATE: | LOCATION:

TYPE: P2 | PROJECT:

CATALOG #:

RATIO SERIES

AREA/SITE LIGHTER

WITH TWO AREA HEADS AT 180 DEGREES

ORDERING GUIDE

Example: RAR1-80L-25-3K7-2-UNV-ASQ-BL-NXWE-BC

CATALOG # RAR2-480L-185-4K7-4W-UNV-A_U-DBT

ORDERING INFORMATION

Series		# LEDs - Wattage		CCT/CRI		Distribution		Optics Rotation		Voltage	
RAR1	Ratio Area Size 1	**80L-25**	25W - 3,000 Lumens	**3K7**	3000K, 70 CRI	**2**	IES TYPE II	Blank for no rotation		**UNV**	Universal 120-277V
		80L-39	39W -5,200 Lumens	**4K7**	4000K, 70 CRI	**3**	IES TYPE III	**L**	Optic rotation left	**120**	120V
		80L-50	50W - 6,000 Lumens	**5K7**	5000K, 70 CRI	**4W**	IES TYPE IV	**R**	Optic rotation right	**208**	208V
		160L-70	70W - 9,000 Lumens			**5QW**	IES TYPE V			**240**	240V
		160L-100	100W - 12,000 Lumens							**277**	277V
		160L-115	115W - 15,000 Lumens							**347**	347V
		160L-135	135W - 18,000 Lumens							**480**	480V
RAR2	Ratio Area Size 2	**320L-110**	110W - 15,000 Lumens								
		320L-140	140W - 18,000 Lumens								
		320L-165	165W - 21,000 Lumens								
		480L-185	185W - 24,000 Lumens								
		480L-210	210W - 27,000 Lumens								
		480L-240	240W - 30,000 Lumens								
		480L-255	255W - 36,000 Lumens								
		480L-295	295W - 42,000 Lumens								
		480L-340	340W - 48,000 Lumens								

Mounting	
ASQ	Arm mount for square pole/flat surface
ASQU	Universal arm mount for square pole/flat surface
Mounting Round Poles	
A_	Arm mount for round pole[1]
A_U	Universal arm mount for round pole[1]
Mounting Other	
WB	Wall bracket
MAF	Mast arm fitter for 2-3/8" OD horizontal arm
K	Knuckle

Color	
BLT	Black Matte Textured
BLS	Black Gloss Smooth
DBT	Dark Bronze Matte Textured
DBS	Dark Brone Gloss Smooth
GTT	Graphite Matte Textured
LGS	Light Grey Gloss Smooth
PSS	Platinum Silver Smooth
WHT	White Matte Textured
WHS	White Gloss Smooth
VGT	Verde Green Textured
Color Option	
CC	Custom Color

Control Options Network	
NXWE	NX Wireless Enabled (module + radio)
NXSPW_F	NX Wireless, PIR Occ. Sensor, Daylight Harvesting [4]
NXSP_F	NX, PIR Occ. Sensor, Daylight Harvesting [4]
Control Options Other	
SCP-40F	Programmable occupancy sensor [3]
7PR	7-Pin twist lock receptacle
7PR-SC	7-Pin receptacle with shorting cap
7PR-MD40F	Low voltage sensor for 7PR
7PR-TL	7-Pin PCR with photocontrol
Sensors	
BTS_F	Bluetooth Programmable, PIR Occupancy/Daylight Sensor, 360° lens [4]
BTSO_F	Bluetooth Programmable, PIR Occupancy/Daylight Sensor, 360° lens, up to 12' mounting height [5]

Options	
BC	Backlight control
F	Fusing (must specify voltage)
TB	Terminal block
2PF	2 power feed with 2 drivers[2]

Notes:

1. Replace "_" with "3" for 3.5"-4.13" OD pole, "4" for 4.18"-5.25" OD pole, "5" for 5.5"-6.5" OD pole
2. Not available with 25, 50, 255, 295 & 340W configurations
3. At least one SCPREMOTE required to program SCP motion sensor
4. Replace "_" with "14" for up to 14' mounting height, "40F" for 15-40' mounting height
5. Replace "_" with "12" for up to 12' mounting height

STOCK ORDERING INFORMATION

Catalog Number	Lumens	Wattage	LED Count	CCT/CRI	Voltage	Distribution	Mounting	Finish
RAR1-100-4K-3	12,000	100W	160L	4000K/70CRI	120-277V	Type 3	Square Arm	Bronze
RAR1-100-4K-4W	12,000	100W	160L	4000K/70CRI	120-277V	Type 4W	Square Arm	Bronze
RAR1-135-4K-3	18,000	135W	160L	4000K/70CRI	120-277V	Type 3	Square Arm	Bronze
RAR1-135-4K-4W	18,000	135W	160L	4000K/70CRI	120-277V	Type 4W	Square Arm	Bronze
RAR2-165-4K-3	21,000	165W	320L	4000K/70CRI	120-277V	Type 3	Square Arm	Bronze
RAR2-165-4K-4W	21,000	165W	320L	4000K/70CRI	120-277V	Type 4W	Square Arm	Bronze

© 2021 Hubbell Outdoor Lighting, a division of Hubbell Lighting, Inc. Specifications subject to change without notice.
701 Millennium Blvd • Greenville, SC 29607 / Tel 864.678.1000 / Website www.hubbelloutdoor.com

HUBBELL Lighting

DATE: LOCATION:

TYPE: PROJECT:

CATALOG #:

RATIO SERIES

AREA/SITE LIGHTER

OPTIONS AND ACCESSORIES - STOCK (ORDERED SEPARATELY)

	Catalog Number	Description
☐	**RARRPA3DB**	Round pole adapter 3.5" to 4.13" for ASQ arm, 3.5" to 4.13" OD pole, dark bronze finish
☐	**RARA3UDB**	Universal mount for square pole or round pole 3.5" to 4.13", dark bronze finish
☐	**RARBC80L**	Ratio blacklight control 80L
☐	**RARBC160L**	Ratio blacklight control 160L
☐	**RARBC320L**	Ratio blacklight control 320L
☐	**RARBC480L**	Ratio blacklight control 480L

ACCESSORIES AND REPLACEMENT PARTS - MADE TO ORDER

	Catalog Number	Description
☐	**RAR–ASQU–XX**	Universal arm mount for square pole/flat surface[2]
☐	**RAR–A_U-XX**	Universal arm mount for round poles[1,2]
☐	**RAR–RPA_–XX**	Round pole adapter[1, 2]
☐	**SETAVP-XX**	4" square pole top tenon adapter, 2 3/8" OD slipfitter[2]
☐	**RETAVP-XX**	4" round pole top tenon adapter; 2 3/8" OD slipfitter for max. Four fixtures (90o); order 4" round pole adapters separately[2]
☐	**BIRD–SPIKE–3**	Ratio size 1 bird deterrent/spikes
☐	**BIRD–SPIKE–4**	Ratio size 2 bird deterrent/spikes
☐	**RARWB–XX**	Wall bracket - use with Mast Arm Fitter or Knuckle[2]

1 Replace "_" with "3" for 3.5"-4.13" OD pole, "4" for 4.18"-5.25" OD pole, "5" for 5.5"-6.5" OD pole

2 Replace "XX" with desired color/paint finish

CONTROLS

Control Options	
Standalone	
SW7PR	SiteSync™ on fixture module via 7PR
SWUSB	SiteSync™ Software on USB
SWTAB	SiteSync™ Windows Tablet
SWBRG	SiteSync™ Wireless Bridge Node
SWFC	SiteSync™ Field Commission Serve
SCPREMOTE	Order at least one per project location to program and control
Networked – Wireless	
WIR-RME-L	wiSCAPE External Fixture Module[1,2]
NX Networked – Wireless	
NXOFM-1R1D-UNV	NX Wireless, Daylight Harvesting, BLE, 7 pin twisted lock

Notes:

1 Works with external networked photosensor

2 wiSCAPE Gateway required for system programming

© 2021 Hubbell Outdoor Lighting, a division of Hubbell Lighting, Inc. Specifications subject to change without notice.
701 Millennium Blvd • Greenville, SC 29607 / Tel 864.678.1000 / Website www.hubbelloutdoor.com

DATE: LOCATION:

TYPE: PROJECT:

CATALOG #:

RATIO SERIES

AREA/SITE LIGHTER

PERFORMANCE DATA

Description	Nominal Wattage	System Watts	Dist. Type	5K (5000K NOMINAL 70 CRI)					4K (4000K NOMINAL 70 CRI)					3K (3000K NOMINAL 80 CRI)				
				Lumens	LPW	B	U	G	Lumens	LPW	B	U	G	Lumens	LPW	B	U	G
RAR1	25	25.4	2	3438	135	1	0	1	3445	136	1	0	1	3240	128	1	0	1
			3	3460	136	1	0	1	3467	136	1	0	1	3260	128	1	0	1
			4W	3406	134	1	0	1	3412	134	1	0	1	3209	126	1	0	1
			5QW	3483	137	2	0	1	3490	137	2	0	1	3282	129	2	0	1
	39	39	2	5263	139	1	0	2	5273	139	1	0	2	4960	131	1	0	2
			3	5297	139	1	0	2	5308	140	1	0	2	4991	131	1	0	2
			4W	5200	137	1	0	2	5210	137	1	0	2	4900	129	1	0	2
			5QW	5333	140	3	0	1	5344	141	3	0	1	5025	132	3	0	1
	50	49.8	2	6310	127	1	0	2	6323	127	1	0	2	5946	120	1	0	2
			3	6349	128	1	0	2	6362	128	1	0	2	5983	120	1	0	2
			4W	6233	125	1	0	2	6245	126	1	0	2	5873	118	1	0	2
			5QW	6392	129	3	0	1	6405	129	3	0	1	6023	121	3	0	1
	70	68.4	2	9486	139	1	0	2	9505	139	1	0	2	8938	131	1	0	2
			3	9544	140	1	0	2	9563	140	1	0	2	8993	131	1	0	2
			4W	9395	137	1	0	2	9414	138	1	0	2	8853	129	1	0	2
			5QW	9608	140	4	0	2	9628	141	4	0	2	9054	132	4	0	2
	100	90.0	2	11976	133	2	0	2	12000	133	2	0	2	11285	125	2	0	2
			3	12050	134	2	0	2	12074	134	2	0	2	11354	126	2	0	2
			4W	11861	132	2	0	2	11885	132	2	0	2	11177	124	2	0	2
			5QW	12131	135	4	0	2	12155	135	4	0	2	11431	127	4	0	2
	115	109.7	2	15572	142	2	0	2	15494	141	2	0	2	14871	136	2	0	2
			3	15833	144	2	0	2	15754	144	2	0	2	15121	138	2	0	2
			4W	15281	139	2	0	3	15205	139	2	0	3	14623	133	2	0	3
			5QW	15732	143	4	0	2	15653	143	4	0	2	15024	137	4	0	2
	135	133.3	2	17971	135	3	0	3	17881	134	3	0	3	17163	129	3	0	3
			3	18272	137	2	0	2	18181	136	2	0	2	17450	131	2	0	2
			4W	17635	132	2	0	3	17547	132	2	0	3	16876	127	2	0	3
			5QW	18156	136	4	0	2	18065	136	4	0	2	17339	130	4	0	2
RAR2 Performance Data on next page																		

* Lumen values are from photometric test performed in accordance with IESNA LM-79-08. Data is considered to be representative of the configurations shown. Actual performance may differ as a result of end-user environment and application.

© 2021 Hubbell Outdoor Lighting, a division of Hubbell Lighting, Inc. Specifications subject to change without notice.
701 Millennium Blvd • Greenville, SC 29607 / Tel 864.678.1000 / Website www.hubbelloutdoor.com

DATE: LOCATION:

TYPE: PROJECT:

CATALOG #:

RATIO SERIES

AREA/SITE LIGHTER

PERFORMANCE DATA

Description	Nominal Wattage	System Watts	Dist. Type	5K (5000K NOMINAL 70 CRI)					4K (4000K NOMINAL 70 CRI)					3K (3000K NOMINAL 80 CRI)				
				Lumens	LPW	B	U	G	Lumens	LPW	B	U	G	Lumens	LPW	B	U	G
RAR2	110	100.3	2	15326	153	2	0	3	15357	153	2	0	3	14442	144	2	0	3
			3	15421	154	2	0	3	15452	154	2	0	3	14531	145	2	0	3
			4W	15180	151	2	0	2	15210	152	2	0	2	14304	143	2	0	2
			5QW	15525	155	4	0	2	15556	155	4	0	2	14629	146	4	0	2
	140	133.2	2	19395	146	2	0	3	19434	146	2	0	3	18276	137	2	0	3
			3	19515	147	2	0	3	19554	147	2	0	3	18389	138	2	0	3
			4W	19210	144	2	0	3	19248	145	2	0	3	18101	136	2	0	3
			5QW	19647	148	5	0	3	19686	148	5	0	3	18513	139	5	0	3
	165	153.6	2	21651	141	3	0	3	21695	141	3	0	3	20402	133	3	0	3
			3	21785	142	3	0	3	21828	142	3	0	3	20527	134	3	0	3
			4W	21444	140	3	0	3	21487	140	3	0	3	20206	132	3	0	3
			5QW	21932	143	5	0	3	21976	143	5	0	3	20666	135	5	0	3
	185	174.5	2	26046	149	3	0	3	26098	150	3	0	3	24543	141	3	0	3
			3	26207	150	3	0	3	26259	150	3	0	3	24694	142	3	0	3
			4W	25797	148	3	0	4	25849	148	3	0	4	24308	139	3	0	4
			5QW	26384	151	5	0	3	26437	152	5	0	3	24861	143	5	0	3
	210	198.2	2	28848	145	3	0	4	28906	146	3	0	4	27184	137	3	0	4
			3	29027	146	3	0	4	29085	147	3	0	4	27351	138	3	0	4
			4W	28572	144	3	0	4	28630	144	3	0	4	26924	136	3	0	4
			5QW	29222	147	5	0	4	29281	148	5	0	4	27536	139	5	0	4
	240	226.9	2	32087	141	3	0	4	32151	142	3	0	4	30235	133	3	0	4
			3	32285	142	3	0	4	32350	143	3	0	4	30422	134	3	0	4
			4W	31780	140	3	0	4	31844	140	3	0	4	29946	132	3	0	4
			5QW	32503	143	5	0	4	32568	144	5	0	4	30627	135	5	0	4
	255	257.0	2	37040	144	3	0	4	36854	143	3	0	4	35373	138	3	0	4
			3	37660	147	3	0	4	37472	146	3	0	4	35966	140	3	0	4
			4W	36347	141	3	0	5	36166	140	3	0	5	34782	135	3	0	5
			5QW	37420	146	5	0	4	37233	145	5	0	4	35736	139	5	0	4
	295	294.0	2	41733	142	3	0	4	41524	141	3	0	4	39855	136	3	0	4
			3	42432	144	3	0	4	42220	144	3	0	4	40523	138	3	0	4
			4W	40953	139	3	0	5	40748	139	3	0	5	39190	133	3	0	5
			5QW	42162	143	5	0	4	41951	143	5	0	4	40264	137	5	0	4
	340	347.1	2	48392	139	4	0	5	48150	139	4	0	5	46215	133	4	0	5
			3	49203	142	3	0	4	48957	141	3	0	4	46989	135	3	0	4
			4W	47488	137	4	0	5	47261	136	4	0	5	45443	131	4	0	5
			5QW	48889	141	5	0	5	48645	140	5	0	5	46689	135	5	0	5

* Lumen values are from photometric test performed in accordance with IESNA LM-79-08. Data is considered to be representative of the configurations shown. Actual performance may differ as a result of end-user environment and application.

© 2021 Hubbell Outdoor Lighting, a division of Hubbell Lighting, Inc. Specifications subject to change without notice.
701 Millennium Blvd • Greenville, SC 29607 / Tel 864.678.1000 / Website www.hubbelloutdoor.com

HUBBELL Outdoor Lighting

DATE: LOCATION:

TYPE: PROJECT:

CATALOG #:

RATIO SERIES

AREA/SITE LIGHTER

ELECTRICAL DATA

# OF LEDS	Nominal Wattage	Input Voltage	Oper. Current (Amps)	System Power (Watts)
RAR1	25	120	0.21	25.4
		208	0.12	
		240	0.11	
		277	0.09	
	39	120	0.32	38.0
		208	0.18	
		240	0.16	
		277	0.14	
		347	0.11	
		480	0.08	
	50	120	0.42	49.8
		208	0.24	
		240	0.21	
		277	0.18	
	70	120	0.57	68.4
		208	0.33	
		240	0.29	
		277	0.25	
	100	120	0.75	90.0
		208	0.43	
		240	0.38	
		277	0.32	
	115	120	0.91	109.7
		208	0.53	
		240	0.46	
		277	0.40	
		347	0.32	
		480	0.23	
	135	120	1.11	133.3
		208	0.64	
		240	0.56	
		277	0.48	
		347	0.38	
		480	0.28	

# OF LEDS	Nominal Wattage	Input Voltage	Oper. Current (Amps)	System Power (Watts)
RAR2	110	120	0.84	100.3
		208	0.48	
		240	0.42	
		277	0.36	
	140	120	1.11	133.2
		208	0.64	
		240	0.56	
		277	0.48	
	165	120	1.28	153.6
		208	0.74	
		240	0.64	
		277	0.55	
	185	120	1.45	174.5
		208	0.84	
		240	0.73	
		277	0.63	
	210	120	1.65	198.3
		208	0.95	
		240	0.83	
		277	0.72	
	240	120	1.89	226.9
		208	1.09	
		240	0.95	
		277	0.82	
	255	120	2.14	257.0
		208	1.24	
		240	1.07	
		277	0.93	
		347	0.74	
		480	0.54	
	295	120	2.45	294.0
		208	1.41	
		240	1.23	
		277	1.06	
		347	0.85	
		480	0.61	
	340	120	2.89	347.1
		208	1.67	
		240	1.45	
		277	1.25	
		347	1.00	
		480	0.72	

LUMINAIRE AMBIENT TEMPERATURE FACTOR (LATF)

Ambient Temperature		Lumen Multiplier
0° C	32° F	1.03
10° C	50° F	1.01
20° C	68° F	1.00
25° C	77° F	1.00
30° C	86° F	0.99
40° C	104° F	0.98
50° C	122° F	0.97

Use these factors to determine relative lumen output for average ambient temperatures from 0-40°C (32-104°F).

PROJECTED LUMEN MAINTENANCE

Ambient Temperature	OPERATING HOURS					
	0	25,000	TM-21-11 L90 36,000	50,000	100,000	L70 (Hours)
25°C / 77°F	1.00	0.97	0.95	0.93	0.86	238,000
40°C / 104°F	0.99	0.96	0.95	0.93	0.85	225,000

© 2021 Hubbell Outdoor Lighting, a division of Hubbell Lighting, Inc. Specifications subject to change without notice.
701 Millennium Blvd • Greenville, SC 29607 / Tel 864.678.1000 / Website www.hubbelloutdoor.com

HUBBELL Lighting

ALCON LIGHTING

SHOP NOW

Project Name: _____ Type: R1 Quantity: _____

Alcon 12100-45-P Linear Commercial-Grade LED Pendant

FIXTURE SPECIFICATIONS

INTENDED USE

The linear architectural pendant light comes in 4-feet and 8-feet standard lengths. This commercial-grade LED fixture can be integrated into continuously seamless runs of any length. Our high-Color Rendering Index (CRI) product is made to last, making this light perfect for commercial, hospitality and residential interiors. Its linear chandelier designs offer both indirect and direct lighting options. Designed for versatility and performance in today's office, classroom, conference room, museum, retailer, hotel and restaurant.

PRODUCT FAMILY

12100-45-P Pendant Mount
12100-45-W Wall Mount
12100-45-S Surface Mount
12100-45-R Recessed Mount

AVAILABLE LENGTHS

2FT, 3FT, 4FT, 6FT & 8FT
Continuous Run | Consult Factory
Custom Length | Consult Factory

FEATURES

Construction: Die-Formed and welded 22-gauge cold rolled steel, painted finish with premium paint
Continuous Run: Full ability to tandem mount for continuous run application
Indirect Mounting: For Most Effective Indirect Lighting Result, Mount at No Less Than 18" from the Ceiling
Custom Design: Offered with Pre-Fabricated and Fully Illuminated Corners
Lens: Glare Free Snap In Frosted Acrylic for Even Distribution
Voltage: 50/60 Hz Constant Current 0-10V @ 120-277V, TRIAC & ELV @ 120V
Dimming: 0-10V, TRIAC (Forward-Phase), ELV (Reverse-Phase)
Controls: Lutron Vive, Lutron Ecosystem, Philips EasySense, Siemens Enlightend
CRI: 80+ & 90+
Life: +60,000 Reported L70 Hours @ 55°C
Operating Temperature: 4°F (-20°C) ~ 122°F (50°C).
Warranty: 5 Years Carefree for Parts & Components (Labor Not Included)
Listings: UL / CUL listed, DLC listed, ADA compliant,

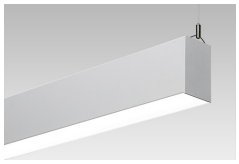
Pendant

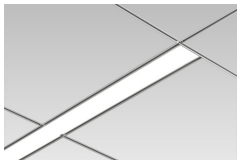
Recessed

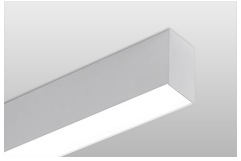
Surface

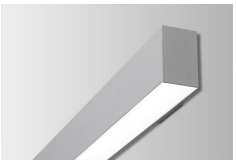
Wall

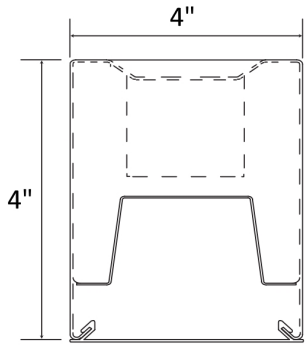

ORDERING INFORMATION Example: (12100-45-P-D27-U18-S-4-30K-TRI-WH-AC48-1-8)

12100-45	P	D18		RC		TW	0-10	SL	AC8	9		TBD
Model	Mounting	LED Downlight	LED Uplight[1]	Shape		Color Temp	Dimming	Finish	Pendant Mounting	CRI	Options	Optional Controls

Model
12100-45 4" x 4"

Mounting
P Pendant
W Wall
S Surface
RS Recessed Screw Slot Grid
RT Recessed T-Bar Grid
RF Recessed Flanged
RTL Recessed Trimless

LED Downlight
Per 4 Foot Sections
D18 18 Watts | 2661 Lumens
D27 27 Watts | 3302 Lumens
D36 36 Watts | 4560 Lumens
D48 48 Watts | 5486 Lumens
D54 54 Watts | 6459 Lumens

LED Uplight[1]
Per 4 Foot Sections
Blank No Uplight
U18 18 Watts | 2661 Lumens
U27 27 Watts | 3302 Lumens

Shape
S Single Run
CR Continuous Run
RC[2] Rectangle
SQ[2] Square
+[2] Cross
CW[2] Ceiling to Wall
CU Custom

Single Run — 2', 3', 4', 6' or 8'
Cont. Run — Specify Run Length in Feet
Rectangle — W 3' / L 26' — WIDTH / LENGTH
Square — W / L — WIDTH / LENGTH
Cross 90° — Specify Length of one leg in Feet
Ceiling to Wall — Ceiling X Wall
Custom

Draw your custom shape here
and send us your idea to rfq@alconlighting.com

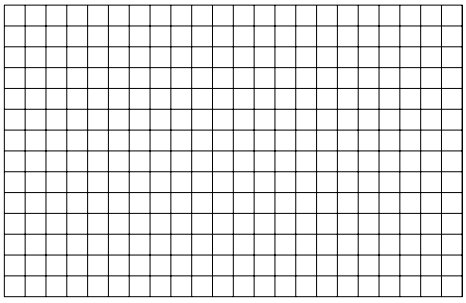

Color Temp
Residential
27K 2700K
30K 3000K
Commercial
35K 3500K
40K 4000K
Industrial
50K 5000K
Tunable White
TW Tunable White 2700-5000K

Dimming
010 Standard 0-10V 5-Wire
TRI TRIAC Forward Phase 2-Wire
ELV Electronic Low Voltage Reverse Phase 3-Wire
DL DALI

Finish
WH Standard White (Matte) RAL# 9003
BK Black (Matte) RAL# 9011
SL Silver (Matte) RAL# 9022
XXXX Specify XXXX: Use RAL # found on Page 2

Pendant Mounting
(Blank) None Required
AC4 4' Adjustable Aircraft Cable
AC8 8' Adjustable Aircraft Cable
ACX Specify X in Feet (Max 30')
ST2 2' Stem
ST4 4' Stem
STX Specify X in Feet (Max 8')

CRI
8 Standard 80+ CRI
9 90+ CRI

Options
Blank No Options
EM5 5W Emergency Ballast
EM8 8W Emergency Ballast
EM16 16W Emergency Ballast
OS Occupancy Sensor w/ Daylight Harvesting
DS Daylight Dimming Photo Sensor
AB Separate Dimming Control of Uplight and Downlight

Optional Controls
Blank No Controls
LV Lutron VIVE™ Wireless
LE Lutron Ecosystem™
PH Philips EasySense™
EN Siemens Enlightened™

1 Only available for Pendant and Wall Mount
2 Length Minimum 2 Foot

Available Finishes

Standard

	01	White	RAL #9003
	02	Black	RAL #9011
	03	Silver	RAL #9022
	04	Crystal White	RAL #9010
	05	Natural Aluminum	RAL #7035
	06	Hampden	RAL #9001
	07	London	RAL #7044

Metropolitan

	08	Urban Native	RAL #8025
	09	Military Green	RAL #6011
	10	Carmin	RAL #8028
	11	Chocolate Spice	RAL #8017
	12	Asher Grey	RAL #7004
	13	Tech Grey	RAL #7016
	14	Slate	RAL #7031
	15	Mason	RAL #7039

Vibrant

	16	Violet Dreams	RAL #4006
	17	Sangria Sunset	RAL #2004
	18	Deep Pink	RAL #4010
	19	Ruby Red	RAL #3027
	20	Island Skye	RAL #6027
	21	Sophia	RAL #5015
	22	Antique Spring	RAL #6019
	23	Daisy	RAL #1018
	24	Gun Metal	RAL #7024

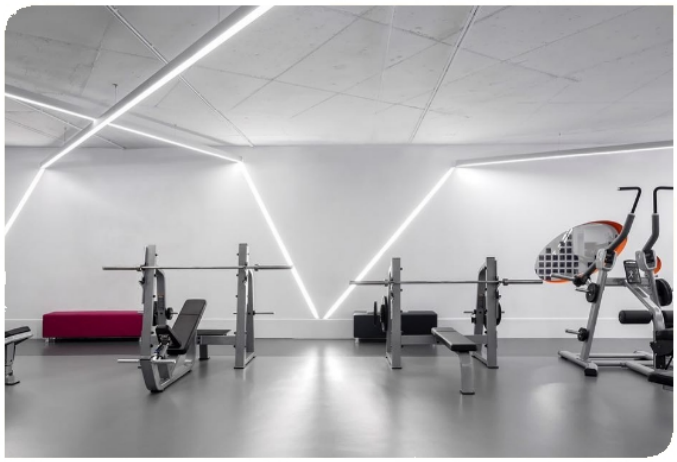

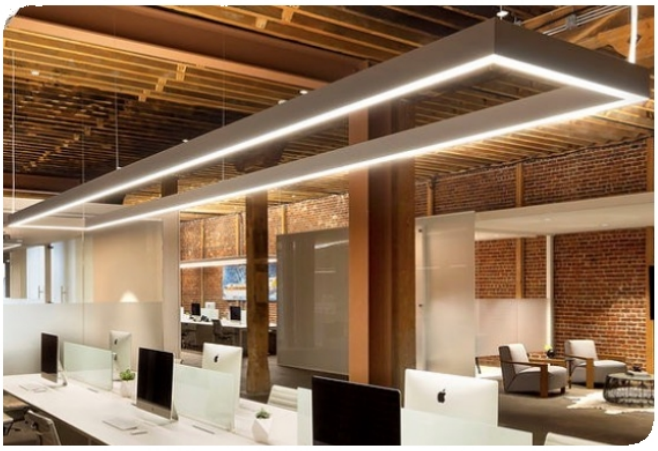

Mounting Bcr_gjq

1" Grid Mounting Options

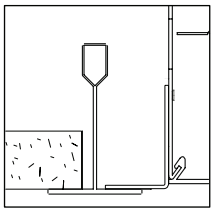

Screw Slot Mounting

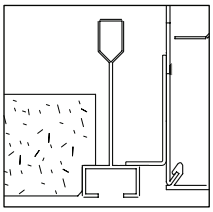

Flange Detail

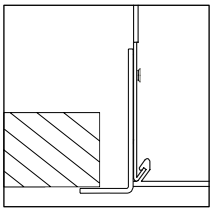

Rotating Crossbar

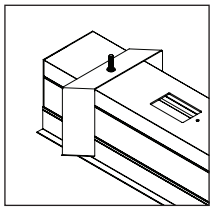

Spackle Flange,Trimeless

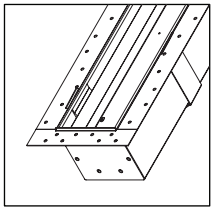

Surface

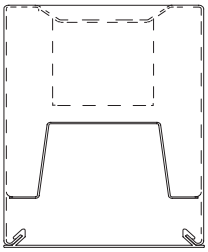

Recessed T-Bar

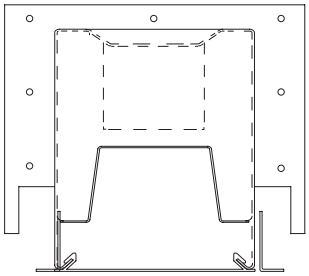

Recessed Screw Slot Grid

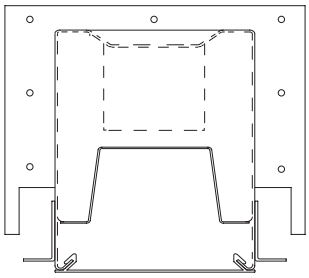

Ceiling to Wall

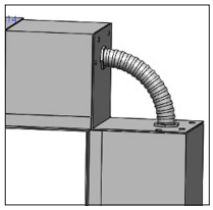

Drywall

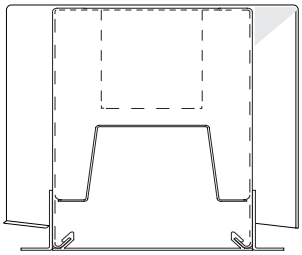

Wall

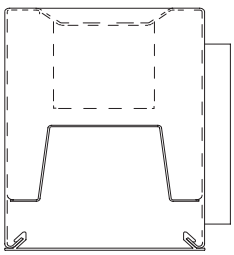

Cable Pendant

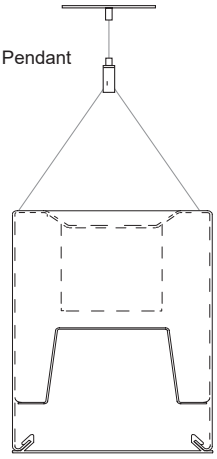

Stem Pendant

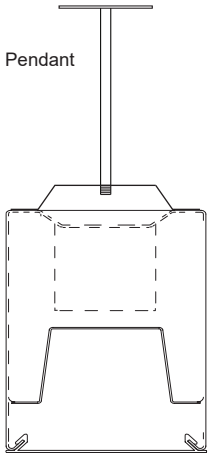

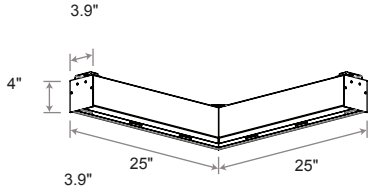

L
(Pendant)

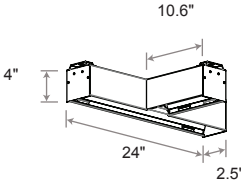

Tee
(Pendant)

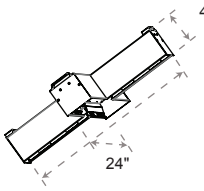

+
(Pendant)

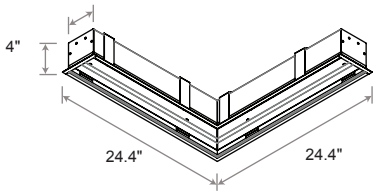

L
(Drywall)

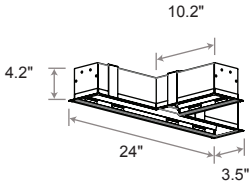

Tee
(Drywall)

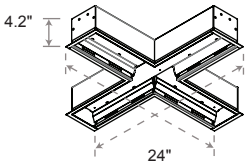

+
(Drywall)

Controls

Smart Sensors	Protocol	Compatible Networks	Occupancy	Daylight	Temperature Reporting	Communication to Luminaire
enlighted	Enlighted RF	Enlighted RF	Integrated	Integrated	Yes	Wireless
LUTRON	EcoSystem	Quantum, Energi Savr Node, Energi TriPak	Enabled	Enabled	No	Wired
VIVE	Lutron Clear Connect®	Lutron Vive System Network	Enabled	Enabled	No	Wireless
PHILIPS	ZigBee HA	Philips	Enabled	Enabled	No	Wired

LUTRON

Controls Installed on the Fixture

FCJS-010
Individual Fixture Control

Fixture Will be Shipped LUTRON VIVE Enabled with LUTRON FCJS-010 0-10V Control Module Installed on the Fixture. Fixtures will be compatible with Lutron FC-SENSOR Occupancy/ Daylight Sensor or FC-VSENSOR Vacancy/Daylight Sensor which can be Added in the Field for Remote Mounting. Fixture May be Controlled with any Vive control systems. Fixtures must be ordered with a 0-10V. Driver.

FCJS-ECO
Individual Fixture Control

Fixture Will be Shipped LUTRON VIVE Enabled with LUTRON FCJS-ECO EcoSystem Control Module Control Module Installed on the Fixture. Fixtures will be compatible with Lutron FC-SENSOR Occupancy/Daylight Sensor or FC-VSENSOR Vacancy/Daylight Sensor which can be Added in the Field for Remote Mounting. Fixture May be Controlled with any Vive control systems. Fixtures must be ordered with a Lutron Driver.

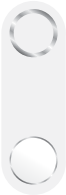

DFCSJ-OEM-OCC

Fixture Will be Shipped LUTRON VIVE Enabled with DFCSJ-OEM-OCC* Vive Integral Fixture Control (with Sensing) Installed on the Fixture. Fixture May be Controlled with any Vive control systems. Fixtures must be ordered with a DMX or Lutron EcoSystem Driver

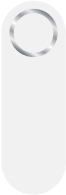

DFCSJ-OEM-RF

Fixture Will be Shipped LUTRON VIVE Enabled with LUTRON DFCSJ-OEM-RF* Vive Integral Fixture Control (RF Only) Installed on the Fixture. Fixture May be Controlled with any Vive control systems. Fixtures must be ordered with a DMX or Lutron EcoSystem Driver.

Controls Provided by Lutron

Vive Wireless Hub

DayLight Sensor

Ceiling Mount Occupancy/Daylight Sensor

Ceiling Mount Occupancy Sensor

Pico Remote

Wall Mount Switch

Wall Mount Occupancy Sensor

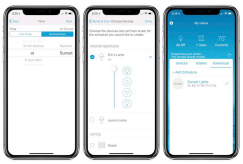

Lutron App

Controls

LEVITON

Fixture will be shipped with Leviton ZL027-N0W power control module installed on the fixture. Fixtures will be compatible with Leviton ZL00J-D0W sensor control module which can be added in the field for remote mounting. Fixture must be controlled with Leviton Intellect Keypad Room Controller, or Leviton Neuron App.

ZL027-N0W
Power control module

ZL00J-D0W
Sensor control module

Leviton Keypad

ZLDNK-1W **ZLDNK-2W**

ZLDNK-4W **ZLDNK-8W**

Intellect™ Keypad Room Controller (Required)

Leviton App

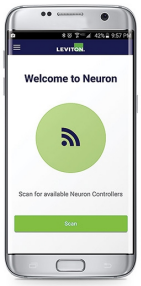

Neuron App

PHILIPS EasySense

Philips EasySense sensors provide luminaire-level control with Occupancy sensing, Daylight harvesting, and Field task tuning.

Controls Installed on the Fixture

PHILIPS-XSR + SNS200
Fixture will be Shipped with EasySense SNS200 Sensor installed and PHILIPS-XSR driver. Fixture May Only be Controlled with Philips Field App or Wireless Switches.

SRB + SNS200
Fixture Will be Shipped with EasySense SNS200 Sensor installed and PHILIPS SRB Bridge. Fixture May Only be Controlled with Philips Field App or Wireless Switches or any 0-10V. Wall Box Dimmer.

Controls Provided by Philips

ZBT-S1AWH **ZBT-S2AWH**

Illumra Wireless Switches

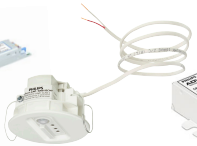

PHILIPS-XSR + SNS200-CMP
Fixture will be Shipped Sensor Ready with PHILIPS-XSR driver and EasySense SNS200-CMP Sensor which is Included to be Remote Mounted. Fixture May Only be Controlled with Philips Field App or Wireless Switches

SRB + SNS200-CMP
Fixture Will be Shipped Sensor Ready with PHILIPS SRB Bridge and EasySense SNS200-CMP Sensor which is Included to be Remote Mounted. Fixture May Only be Controlled with Philips Field App or Wireless Switches or any 0-10V. Wall Box Dimmer.

SRB
Fixture will be Shipped Sensor Ready with SRB Bridge . Fixture will be Compatible with EasySense Sensor SNS200-CMP which can be Added in the Field for Remote Mounting. Fixture May Only be Controlled with Philips Field App or Wireless Switches or any 0-10V. Wall Box Dimmer.

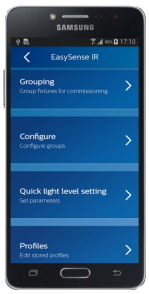

Philips Field App

Compatible Dimmers

MFG	Triac	ELV	0-10
LUTRON	TG-600P LG-600P TGCL-153P DV-600P DVCL-153P S-603PG CT-103P S-600P	DVELV-303P SELV-300P MAELV-600 FAELV-500	NTSTV NFTV DVSTV
LEVITON	6161 6633-P 6683 6631-2 IPI06-1LZ	IPE04 VPE06-1LZ	IP710-DLZ

Photometrics

Direct

12100-45-D27-S-4

Illuminance at a Distance

	Center Beam FC	Beam Width	
1.7FT	555 FC	3.9 FT	3.1 FT
3.3FT	147 FC	7.6 FT	6.1 FT
5.0FT	64.1 FC	11.6 FT	9.2 FT
6.7FT	35.7 FC	15.5 FT	12.3 FT
8.3FT	23.3 FC	19.2 FT	15.2 FT
10.0FT	16.0 FC	23.2 FT	18.4 FT

■ Vert. Spread: 98.4°
■ Horiz. Spread: 85.1°

12100-45-D54-S-4

Illuminance at a Distance

	Center Beam FC	Beam Width	
1.7FT	993 FC	3.9 FT	3.1 FT
3.3FT	263 FC	7.6 FT	6.1 FT
5.0FT	115 FC	11.6 FT	9.2 FT
6.7FT	63.9 FC	15.5 FT	12.3 FT
8.3FT	41.6 FC	19.2 FT	15.2 FT
10.0FT	28.7 FC	23.2 FT	18.4 FT

■ Vert. Spread: 98.4°
■ Horiz. Spread: 85.1°

12100-45-D27-S-8

Illuminance at a Distance

	Center Beam FC	Beam Width	
1.7FT	1,117 FC	3.9 FT	3.1 FT
3.3FT	296 FC	7.6 FT	6.1 FT
5.0FT	129 FC	11.6 FT	9.2 FT
6.7FT	71.9 FC	15.5 FT	12.3 FT
8.3FT	46.8 FC	19.2 FT	15.2 FT
10.0FT	32.3 FC	23.2 FT	18.4 FT

■ Vert. Spread: 98.4°
■ Horiz. Spread: 85.1°

12100-45-D54-S-8

Illuminance at a Distance

	Center Beam FC	Beam Width	
1.7FT	1,986 FC	3.9 FT	3.1 FT
3.3FT	527 FC	7.6 FT	6.1 FT
5.0FT	230 FC	11.6 FT	9.2 FT
6.7FT	128 FC	15.5 FT	12.3 FT
8.3FT	83.3 FC	19.2 FT	15.2 FT
10.0FT	54.7 FC	23.2 FT	18.4 FT

■ Vert. Spread: 98.4°
■ Horiz. Spread: 85.1°

Direct/Indirect

12100-45-D27-U27-S-4

Illuminance at a Distance

	Center Beam FC	Beam Width	
1.7FT	470 FC	3.9 FT	3.3 FT
3.3FT	296 FC	7.6 FT	6.5 FT
5.0FT	129 FC	11.5 FT	9.8 FT
6.7FT	71.9 FC	15.5 FT	13.2 FT
8.3FT	46.8 FC	19.1 FT	16.3 FT
10.0FT	32.3 FC	23.1 FT	19.7 FT

■ Vert. Spread: 98.1°
■ Horiz. Spread: 89.0°

12100-45-D54-U18-S-4

Illuminance at a Distance

	Center Beam FC	Beam Width	
1.7FT	982 FC	3.8 FT	3.1 FT
3.3FT	261 FC	7.4 FT	5.9 FT
5.0FT	114 FC	11.3 FT	9.0 FT
6.7FT	63.2 FC	15.1 FT	12.1 FT
8.3FT	41.2 FC	18.7 FT	14.9 FT
10.0FT	28.4 FC	22.6 FT	18.0 FT

■ Vert. Spread: 96.9°
■ Horiz. Spread: 83.9°

12100-45-D27-U27-S-8

Illuminance at a Distance

	Center Beam FC	Beam Width	
1.7FT	940 FC	3.9 FT	3.3 FT
3.3FT	249 FC	7.6 FT	6.5 FT
5.0FT	109 FC	11.5 FT	9.8 FT
6.7FT	60.5 FC	15.5 FT	13.2 FT
8.3FT	39.4 FC	19.1 FT	16.3 FT
10.0FT	27.2 FC	23.1 FT	19.7 FT

■ Vert. Spread: 98.1°
■ Horiz. Spread: 89.0°

12100-45-D54-U18-S-8

Illuminance at a Distance

	Center Beam FC	Beam Width	
1.7FT	1,965 FC	3.8 FT	3.1 FT
3.3FT	521 FC	7.4 FT	5.9 FT
5.0FT	227 FC	11.3 FT	9.0 FT
6.7FT	126 FC	15.1 FT	12.1 FT
8.3FT	82.4 FC	18.7 FT	14.9 FT
10.0FT	56.8 FC	22.6 FT	18.0 FT

■ Vert. Spread: 96.9°
■ Horiz. Spread: 83.9°

Pendant Installation

A simple design and adjustable components provide a flexible and hassle-free experience when installing the Continuum Series™ .

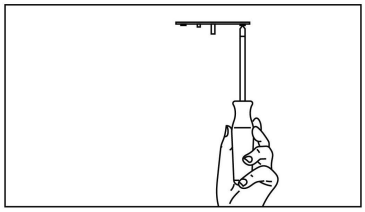

Step 1: Secure cross brackets to junction boxes for both power and non power mounting points.

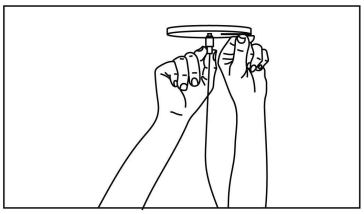

Step 2: Secure canopy with power canopy coupler (Power Feed Mount) & secure canopy with cable terminal (Non Power Feed Mount).

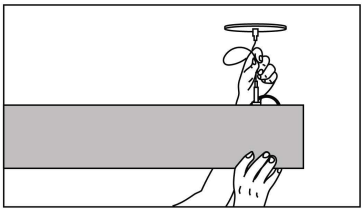

Step 3: Feed aircraft cable into cable grippers, adjust height and level luminaire.

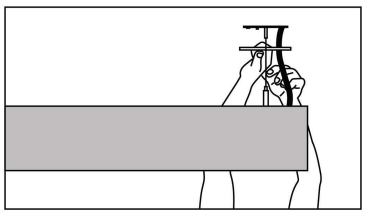

Step 4: Unscrew outer coupler to allow access to junction box. Feed power cord through canopy.

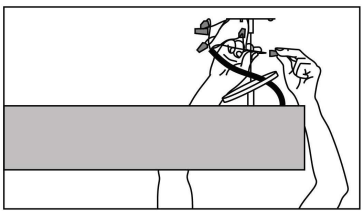

Step 5: Secure canopy back in place with outer coupler.

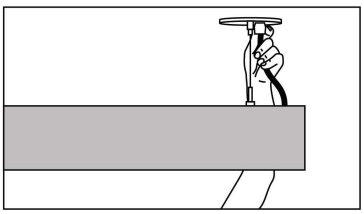

Step 6: Snap strain relief around power cord. Press into canopy.

Recessed T-Bar Installation

The T-Bar variant of the Continuum Series™ is built to easily install and integrate into the standard grid ceilings in modern interior spaces. The luminaire's flange conveniently hides any imperfections in cuts to the tile, creating a clean, seamless look.

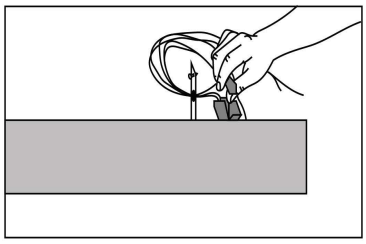

Step 1: Shut off power. Remove ceiling tile from desired light fixture location. Remove knockout plate. Remove pigtail.

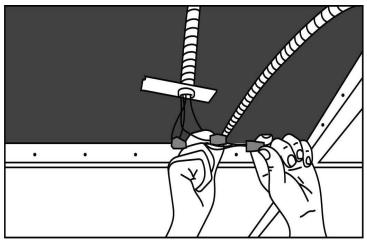

Step 2: Mount knockout plate to flex conduit. Connect pigtail to conduit wires.

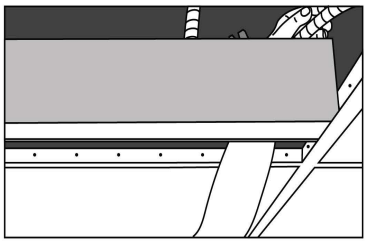

Step 3: Lay luminaire in grid at desired position. Secure fixture to structure above using structural wire (by others) via holes in the end plates.

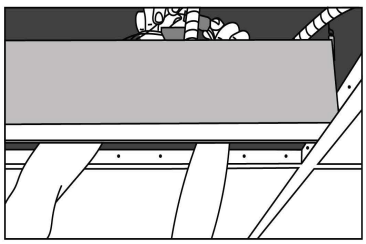

Step 4: Connect pigtail disconnects to luminaire disconnects. Insert wires into housing. Insert knockout plate and fasten using screw provided.

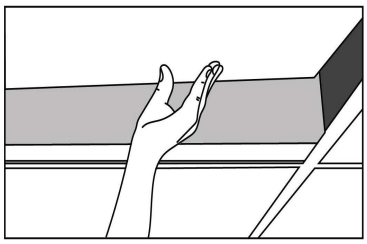

Step 5: Cut tile to fit beside luminaire and install on both sides of the luminaire.

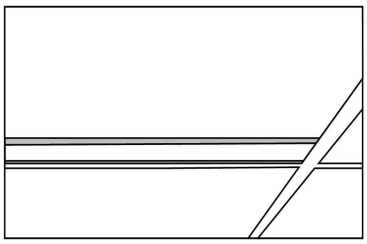

Step 6: Power can now be turned on.

S1

Efficient-Tec International, LLC
Stainless Steel Systems S3

DATE:
CUSTOMER:
PROJECT:

MYRIS

Standard Wall Rail Design

Intertek | LED BUILT IN | 0-10V DIMMABLE | 80 CRI | M.O. 2.93W/ft | H.O. 4.4W/ft | IP67

ILLUMINATED RAILING OPTIONS

DESIGN LINE NAME	1 MATERIAL & FINISH	2 RAIL SIZE	3 MOUNTING STYLE	4 INFILL OPTIONS	5 LIGHT DISTRIBUTION	6 LED OUTPUT	7 LENS STYLE	8 ILLUMINATION COLOR	9 DRIVER TYPE	10 LENGTH IN FEET
MYRIS ILLUMINATED										

SUBMIT

1 MATERIAL & FINISH

SS	316 Stainless Steel w/#6 (320 grit) Satin Finish
SP	316 Stainless Steel w/#8 High Polish Finish
ALPC	6063 Aluminum w/Powder Coat Finish *(RAL Required)*

2 RAIL SIZE

1	1.67" O.D. Stainless Steel 1-¼" Pipe
2	1.90" O.D. Stainless Steel 1-½" Pipe
3	1.50" Square Stainless Steel
4	1.66" O.D. Aluminum 1-¼" Pipe
5	1.90" O.D. Aluminum 1-½" Pipe

3 MOUNTING STYLE

WM	Wall Mount
PM	Post Mount
GM	Glass Mount

(Non-Illuminated options & form on next page)

4 INFILL OPTIONS

NR	Not Required

5 LIGHT DISTRIBUTION

SY	Symmetric
AS	Asymmetric

6 * LED OUTPUT

1	Medium Output (2.6W / 173lm per ft.)
2	High Output (4.4W / 355 lm per ft.)
3	Dot System (1.5W)

** See page 3 for specifications based upon medium / high output & Dot System*

7 LENS STYLE

1	Clear w/ prismatic diffusers
2	Opal White w/ diffusers
3	Clear w/ no diffusion (asymmetric)
4	Dot System - Clear

8 ** ILLUMINATION COLOR

1L	Linear Warm White 2700K CCT
2L	Linear Warm White 3000K CCT
3L	Linear Warm White 3500K CCT
4L	Linear White 4000K CCT
5L	Red
6L	Green
7L	Blue
8L	Amber
9L	RGB
DOT SYSTEM	
1D	Dot System Warm White 2700K CCT
2D	Dot System Warm White 3000K CCT
3D	Dot System White 4000K CCT

***See page 3 for specifications based upon Color Temperature (CCT)*

9 DRIVER

1	Remote

10 LENGTH IN FEET

ENTER LENGTH IN FEET

MYRIS

Standard Wall Rail Design

NON-ILLUMINATED RAILING OPTIONS

DESIGN LINE NAME	1 MATERIAL & FINISH	2 RAIL SIZE	3 MOUNTING STYLE	4 INFILL OPTIONS	5 LENGTH IN FEET
MYRIS NON-ILLUMINATED					

SUBMIT

1 MATERIAL & FINISH

SS	316 Stainless Steel w/#6 (320 grit) Satin Finish
SP	316 Stainless Steel w/#8 High Polish Finish
ALPC	6063 Aluminum w/Powder Coat Finish *(RAL Required)*

2 RAIL SIZE

1	1.67″ O.D. Stainless Steel 1-¼″ Pipe
2	1.90″ O.D. Stainless Steel 1-½″ Pipe
3	1.50″ Square Stainless Steel
4	1.66″ O.D. Aluminum 1-¼″ Pipe
5	1.90″ O.D. Aluminum 1-½″ Pipe

3 MOUNTING STYLE

WM	Wall Mount
PM	Post Mount
GM	Glass Mount

4 INFILL OPTIONS

NR	Not Required

5 LENGTH IN FEET

ENTER LENGTH IN FEET

(Illuminated options & form on previous page)

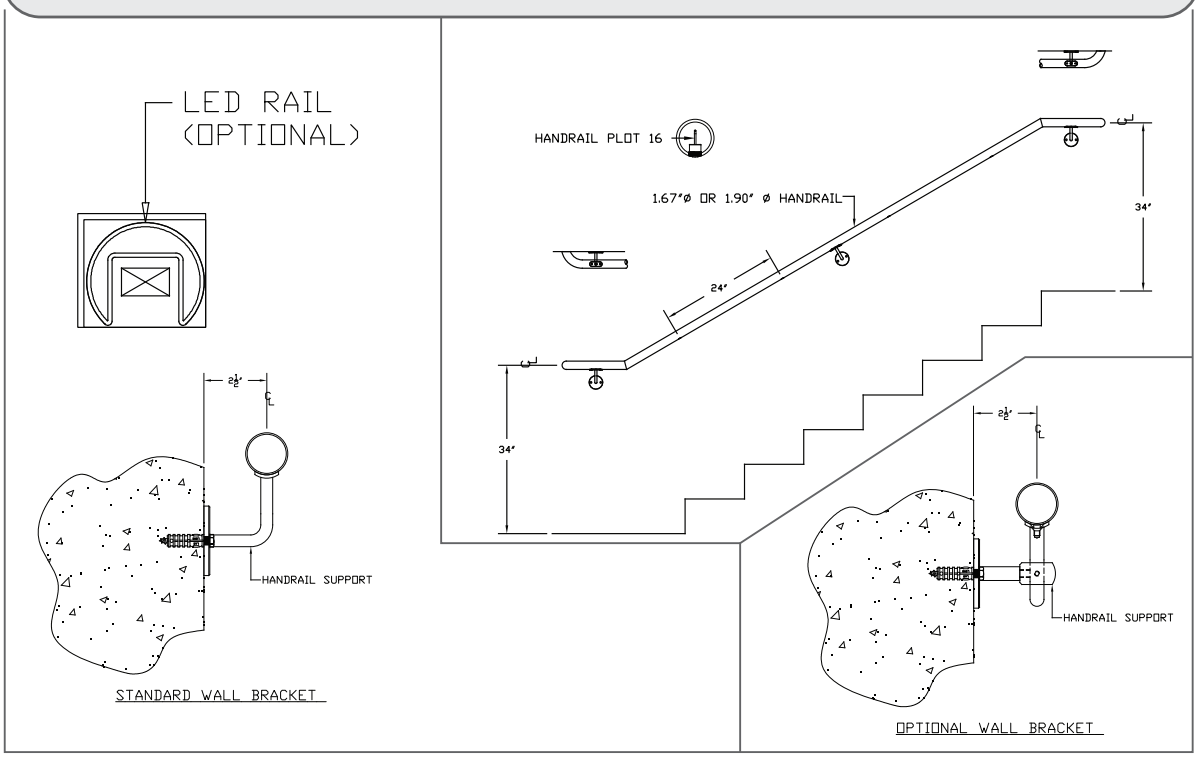

MYRIS

Standard Wall Rail Design

Handrail Linearflex®

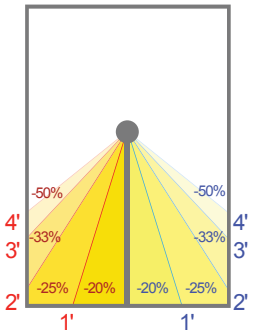

lumen /ft & lumen /W based upon color temp (CCT)

MEDIUM LED OUTPUT	Intertek	LED BUILT IN		DIMMABLE	80 CRI	M.O. 2.93W/ft	2700K CCT	lm/ft 290	lm/W 99	IP67
	Intertek	LED BUILT IN		DIMMABLE	80 CRI	M.O. 2.93W/ft	3000K CCT	lm/ft 295.9	lm/W 101	IP67
	Intertek	LED BUILT IN		DIMMABLE	80 CRI	M.O. 2.93W/ft	3500K CCT	lm/ft 303.3	lm/W 104	IP67
	Intertek	LED BUILT IN		DIMMABLE	80 CRI	M.O. 2.93W/ft	4000K CCT	lm/ft 310.6	lm/W 106	IP67
HIGH LED OUTPUT	Intertek	LED BUILT IN		DIMMABLE	80 CRI	H.O. 4.4W/ft	2700K CCT	lm/ft 386.3	lm/W 88	IP67
	Intertek	LED BUILT IN		DIMMABLE	80 CRI	H.O. 4.4W/ft	3000K CCT	lm/ft 395.1	lm/W 90	IP67
	Intertek	LED BUILT IN		DIMMABLE	80 CRI	H.O. 4.4W/ft	3500K CCT	lm/ft 402.7	lm/W 92	IP67
	Intertek	LED BUILT IN		DIMMABLE	80 CRI	H.O. 4.4W/ft	4000K CCT	lm/ft 421.4	lm/W 96	IP67

Handrail Dot®

Intertek | IP66 | IK10 | on/off / 0-10V | 316 SS Housing | PC Lens | Ta min -20°C -4°F / Ta max +50°C +122°F

Power	1.5 W (500mA)			
Color temperatures	2700K	3000K	4000K	5000K
Lumens output	60° - 114 lm 120° - 120 lm 90°(asymmetric) - 108 lm	60° - 120 lm 120° - 126 lm 90°(asymmetric) - 114 lm	60° - 136 lm 120° - 143 lm 90°(asymmetric) - 129 lm	60° - 136 lm 120° - 143 lm 90°(asymmetric) - 129 lm
Luminaire efficiency	72 to 80 lm/W	76 to 84 lm/W	86 to 96 lm/W	86 to 96 lm/W
Measures / Weight	.58 in x .59 in / .22 lb			

Handrail Dot® 60° 3000K

Distance	Beam	Diameter	
1.64 ft		1.08 ft	540 lux
3.28 ft		2.20 ft	135 lux
4.92 ft		3.28 ft	60 lux
6.56 ft		4.40 ft	34 lux
8.20 ft		5.48 ft	22 lux

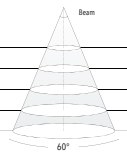

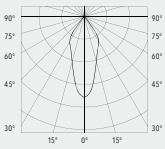

Handrail Dot® 120° 3000K

Distance	Beam	Diameter	
0,5 m		3.90 ft	227 lux
1 m		7.81 ft	57 lux
1,5 m		11.71 ft	25 lux
2 m		15.62 ft	14 lux
2,5 m		19.52 ft	9 lux

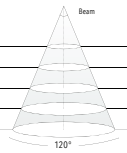

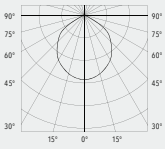

Handrail Dot® Asym. 90° 5000K

Distance	Beam	Diameter	
0,5 m		2.13 x 2.40 ft	398 lux
1 m		4.27 x 4.82 ft	100 lux
1,5 m		6.36 x 7.22 ft	44 lux
2 m		8.50 x 9.65 ft	25 lux
2,5 m		10.63 x 12.04 ft	16 lux

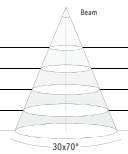

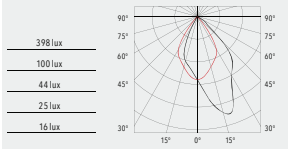

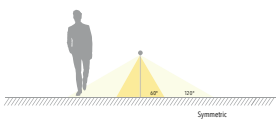

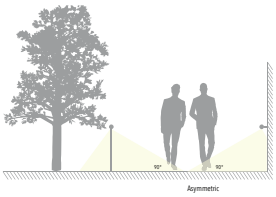

LITECONTROL
making light work™

DATE:	LOCATION:
TYPE:	PROJECT:
CATALOG #:	

2L-WS-D

MOD™ 2 LED WALL/SLOT DIRECT

S9-7, S10-7, S17-6

MODX

FEATURES

- Variable Intensity technology provides a range of specifiable outputs and resulting fixture wattages
- 2 SDCM color consistency
- Perimeter mount with 4 regression depths

See Certification Specifications

CONTROLS

NX DISTRIBUTED INTELLIGENCE™ SpectraSync™

RELATED PRODUCTS

3L-WS-D 4L-WS-D 6L-WS-D

SPECIFICATIONS

CONSTRUCTION

- Housing contructed from die-formed and welded steel with wiring knockouts in top
- End caps constructed from die-formed steel. Installs from below via magnetic interface
- End caps overlap diffuser at each fixture end to elimate gaps and LED visibility

OPTICAL PERFORMANCE

- 2 SDCM color consistency, 80 or 90 CRI
- SOF: Soft diffuse acrylic lens
- NRW: Highly transmissive diffuse acrylic lens with linear prisms
- BWO: White blade baffle with softglo lens overlay. Output multiplier (.70)
- ASYM: Asymmetric Highly transmissive diffuse acrylic lens with linear prisms

INSTALLATION

- Finish of wall should extend 7" above ceiling. Continuous Fixture Support Rail is provided for ease of installation. Ceiling construction must be supported independently of the lighting. Installations with straight extensions must be specified with wall-to-wall lengths. For optimal spacing from the wall, the amount of light provided will be rounded down to the nearest foot, unless this results in the fixture being < 2" away from the wall
- Ex. A 20'-4" through 21'-3" wall-to-wall length will result in 20' of light. A wall-to-wall length of 20'-3" will produce 19' of light. For recommended wall uniformity, fixture should be between 2-4" from wall. For more precise lighting, 3" increment fixtures are available.
- LG/NG/SS Mounting: Plenum cover to rest on t-bar
- DW Mounting: Trimless appearance with fixture resting on back of drywall. For non-SE rows, drywall must be "finished" to close off fixture

INSTALLATION (CONTINUED)

- Patterns: End of row straight extensions allow for adjustability of fixture to be 0.5"-8.5" away from wall. For NRW diffuser option, fixture is recommended to be no less than 2" away from wall. Field cut corner pieces allow for 85-160° inside corners and 70-160° outside corners. See image for further clarification
- Fixture weight: 3lbs/ft

ELECTRICAL

- Variable Intensity (VI) technology allows precise specification of fixture output/wattage. Fixture will be programmed and labeled to specification. Indirect and direct hemispheres can be independently specified
- Entire LED module can be removed and replaced
- 1C (1 Circuit) Fixture wired for a single circuit

CONTROLS

- Sensors install between diffusers
- NX Distributed Intelligence™: Supports indoor and outdoor applications, wired, wireless and hybrid networked NX lighting control deployments and enabled emerging applications, such as Hubbell Lighting's SpectraSync™ Color Tuning Technology

CONTROLS (CONTINUED)

- SpectraSync™ Color Tuning Technology: Control your space based on the needs of the application, specific activities throughout the day and preferences of the occupants

CERTIFICATIONS

- DLC® (DesignLights Consortium) Qualified - see www.designlights.org
- CSA listed for damp location
- IBEW
- AF of L
- UL924
- This product qualifies as a "designated country construction material" per FAR 52.225-11 Buy American-Construction. Materials under Trade Agreements effective 8/14/2020. See Buy American Solutions. Contact factory for configurations including SpectraSync, NX, or sensors.

WARRANTY

- LED boards - 5 years
- LED drivers (standard) - 5 years
- LED drivers (Lutron) - 3 years
- See www.litecontrol.com for details

KEY DATA	
Lumen Range Per Foot	D: 300–850
Wattage Range Per Foot	2.9–8.6
Efficacy Range (LPW)	99–102
Rated Life (Hours)	L70: >61,000 L90: >61,000

© 2021 Litecontrol a division of Hubbell Lighting, Inc. Specifications subject to change without notice.
65 Spring Street Plympton, MA 02367 / Tel 781.294.0100 / Website www.litecontrol.com

HUBBELL Lighting

LITECONTROL
making light work™

DATE: | LOCATION:
TYPE: | PROJECT:
CATALOG #:

2L-WS-D

MOD™ 2 LED WALL/SLOT DIRECT

ORDERING GUIDE

Example: 2L-WS0-DW-D-8-.3-08-SOF-C1-27K-D030-D01-1C-UNV-EC

CATALOG #

2L	WS0	DW	D			
Series	**Regressed Depth**	**Ceiling Type**[1]	**Fixture Distribution**	**Row Length (feet)**	**Row Length Adder (inches)**	**Max Length in Row**
2L MOD	**WS0** Wall/Slot perimeter mounted, flush	**DW** Drywall (trimless finish)	**D** Direct	**__'** Enter in foot increments	**.3** Row length +3"	**02** 2', 609 mm
	WS2 Wall/Slot perimeter mounted, 2" regressed depth	**LG** 15/16 Grid	**AD** Asymmetric Direct		**.6** Row length +6"	**03** 3', 914 mm
	WS3 Wall/Slot perimeter mounted, 3" regressed depth	**NG** 9/16 Grid			**.9** Row length +9"	**04** 4', 1219 mm
	WS4 Wall/Slot perimeter mounted, 4" regressed depth	**SS** 9/16 Screw Slot				**05** 5', 1524 mm
						06 6', 1829 mm
						08 8', 2438 mm

			D030		
Direct Optical Distribution	**Finish/Color**[4]	**Color Temperature**	**Direct Output/ft**[7]	**Driver**	**Circuiting**
SOF Soft Diffuse Lens	**C1** Matte White (Default)	**27K** 2700K[5]	**D030** 300 (min)	**D01** 1% Dimming, 0-10V	**1C** 1 Circuit
NRW Narrow Beam Grazer Lens (WS2, WS3, WS4 only)	**C2** Textured Matte White	**30K** 3000K	*to*	**D00** 1% Dim-to-Off, 0-10V	
BWO Blade Baffle with Overlay[2]	**C3** Light Silver	**35K** 3500K	**D085** 850 (max)	**D05** SpectraSync 5% Dimming, 0-10V[8]	
ASYM Asymmetric Diffuse Lens[2, 3]	**C4** Machined Aluminum	**40K** 4000K		**DS1** 1% Dimming w/ Soft Start, 0-10V	
	C5 Carbon Black	**50K** 5000K[5]		**DS0** 1% Dim-to-Off w/ Soft Start, 0-10V	
	C6 Textured Camera Black	**27K9** 2700K, 90 CRI[5]		**LEC** Hi-lume 1% Ecosystem LED Driver	
	CC Custom Color	**30K9** 3000K, 90 CRI		**DALI** DALI[5]	
		35K9 3500K, 90 CRI		**DALIP** Powered by DALI (2.0)[5]	
		40K9 4000K, 90 CRI		**NDM** Non-Dimming	
		50K9 5000K, 90 CRI[5]			
		2230TD 2200K-3000K SpectraSync™ Dim-to-Warm[6]			
		2750T 2700K-5000K SpectraSync™ Tunable White[6]			
		2765T 2700K-6500K SpectraSync™ Tunable White[6]			

OPTIONAL

Voltage	Straight Run Termination	Nightlight	Emergency	Thru-wiring	Chicago Enviromental Air Modification	Patterns[5, 12]
UNV Universal Voltage (120V–277V)	**EC** End Cap Enter quantity. 2EC = 2 End Caps	**NL** Nightlight Circuit Required. Enter quantity. 2NL = 2 nightlight circuits/row	**EF** 10W Emergency Battery Pack. Enter quantity. 2EF = 2 emergency batteries/ row.[10]	**W1** No Thru Wire	**CCEA** Chicago Enviromental Air Modification	**WSC** Wall/Slot Corner, 0.5"–8.5"
347 347 Volt[5, 9]	**SE** Straight Extension, 0.5"–8.5" Enter quantity. 2SE = 2 Straight Extensions			**W2** Provide Normal and Emergency/ Nightlight Thru Wiring[11]		
				W3 Provide Normal Thru Wiring Only		

Control Options[5]

NX Standalone

NXS NX, PIR BT Occupancy/Daylight Sensor, Slide Mount[13, 14, 15]

NX Networked – Wired

NXE NX, Dual SmartPorts[13, 14]

NXES NX, PIR BT Occupancy/Daylight Sensor, Slide Mount, Dual SmartPORTs[13, 14]

NX Networked – Wireless

NXSW NX Wireless, PIR BT Occupancy/Daylight Sensor[13, 14, 15]

NXWE NX Wireless Wireless Enabled[13, 14]

NX Networked – Wired/Wireless

NXSWD NX Wireless, PIR BT Occupancy/Daylight Sensor, Dual SmartPORTs[13, 14, 15]

NXWD NX Wireless, Dual Smart Ports[13, 14]

Sensors

SD1 Daylight Sensor Required. Enter quantity. 2SD1 = 2 daylight sensors/row

SO1 Occupancy Sensor Required. Enter quantity. 2SO1 = 2 occupancy sensors/row

SZ1 Zigbee Radio Module Required. Enter quantity. 2SZ1=2 radio modules/row. Radio controls up to 10 drivers. Must be ordered with D00. Only available in 4'+, WS0 option

Notes:

1 Ceiling Type cannot be retrofitted in the field
2 Not Available with Patterns.
3 Only available with WS0 & AD
4 Visit www.litecontrol.com/finishes for details.
5 Additional lead time may be applicable. Contact factory.
6 Must be ordered with D05 Driver option; excludes 2' lengths and patterns.
7 Specifiable in 50 lumen increments. Reference the Performance Data Table for full performance offering and exceptions.
8 Must be ordered with 2230TD, 2750T or 2765T Option
9 Excludes Emergency Battery Pack 'EF' Option. Excludes DALI, DALIP and Lutron (LEC) Dimming Drivers
10 EF - 10W battery powered driver. Provides a minimum of 90 minutes of emergency lighting. Inverter-Compatible. Provided by others.
11 Only applicable when specified with Emergency/Nightlight.
12 Contact Factory for pattern configurations. Approval drawings required.

NX In-Fixture Control Options:

13 Not available for row mounting. Only available with 0-10V Driver options. Contact factory for Length restrictions.
14 Refer to NX Integrated Controls Reference Table for Functionality of Options.
15 NX Sensors with Bluetooth, BLE, provides remote commission only.

© 2021 Litecontrol, a division of Hubbell Lighting, Inc. Specifications subject to change without notice.
65 Spring Street Plympton, MA 02367 / Tel 781.294.0100 / Website www.litecontrol.com

HUBBELL Lighting

2L-WS-D

MOD™ 2 LED WALL/SLOT DIRECT

CONTROLS

NX DISTRIBUTED™ INTELLIGENCE

NX Distributed Intelligence™ Lighting Controls:

Supports both indoor and outdoor applications in a variety of deployment options- wired, wireless, hybrid.
Integrates with and enables a wide array of luminaires including those with SpectraSync Color Tuning Technology.

NX INTEGRATED CONTROLS REFERENCE								
NX Option	Sensor	Networkable	Scheduling	Occupancy	Daylight Harvesting	0–10V Dimming	On/off Control	Bluetooth® App Programming
NX Standalone								
NXS	NXSMP-SMI	No	Yes	Yes	Yes	Yes	Yes	Yes
NX Networked – Wired								
NXE	N/A	Yes	Yes	No	No	Yes	Yes	Requires NXBTC/R [1]
NXES	NXSMP-SMI	Yes	Yes	Yes	Yes	Yes	Yes	Yes
NX Networked – Wireless								
NXSW	NXSMP-SMI	Yes	Yes	Yes	Yes	Yes	Yes	Yes
NXWE [2]	N/A	Yes	Yes	No	No	Yes	Yes	No[3]
NX Networked – Wired/Wireless								
NXSWD	NXSMP-SMI	Yes	Yes	Yes	Yes	Yes	Yes	Yes
NXWD	N/A	Yes	Yes	No	No	Yes	Yes	Requires NXBTC/R [1,3]

1 NXBTC/R needs to be plugged into an available NX SmartPort™ on the fixture network
2 Programming via App requires factory assistance
3 To program NXWE option, need to consult factory. If connected to an area controller, programming can be done from that

SpectraSync™ Color Tuning Technology:

Control your space based on the needs of the application, specific activities throughout the day and preferences of the occupants with distinct SpectraSync™ Color Tuning Technologies.

SpectraSync™ Color Tuning Technology

SPECTRASYNC COLOR TUNING TECHNOLOGY		
Mode	Kelvin Range	Description
Dim to Warm	2200K-3000K	Mimics the familiar warming effect that occurs with traditional incandescent sources as they are dimmed
Tunable White	2700K-5000K 2700K-6500K	Offers users the ability to tailor CCT to their personal preference, enhancing task visibility, material and colors or the aesthetics of the space
Scheduled White	2700K-5000K 2700K-6500K	Mimics the rhythm of natural light or follows an alternative user-defined schedule throughout the day, enhancing an occupant's mood and well-being

SpectraSync Tunable White

Available in two options: 2750T (2700K–5000K) or 2765T (2700K–6500K).
Requires two 0–10V controllers, one for intensity and one for CCT.
Minimum 5% dimming.

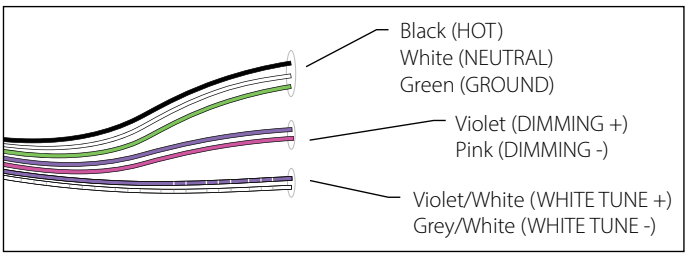

SpectraSync Tunable White luminaires are provided with two 0–10V circuits. The violet and pink circuit is for wiring to any qualified 0–10V controller for dimming. The violet/white and grey/white circuit is for wiring to any qualified 0–10V controller for Tunable White CCT control.

Controller Manufacturer Data

SpectraSync Tunable White was designed to be used with sinking style dimmers (provided by others) and is compatible with:

- Hubbell Control Solutions (HCS): NX Distributed Intelligence™ Room Controllers (NXRC) and In-fixture Controllers (NXFM)
- Lutron: DVTV, DVSTV, and NFTV dimmers
- Wattstopper: ADF120277 and CD4BL (Titan) dimmers

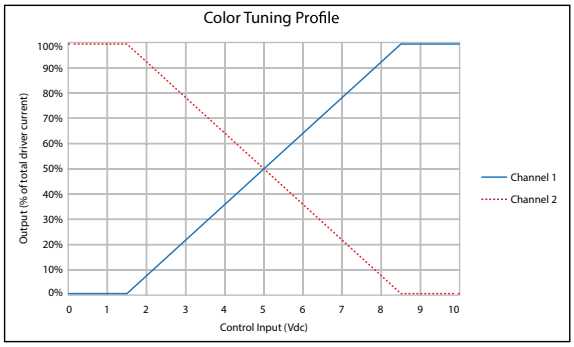

NX Design & Application Guide
NX Brochure
SpectraSync
NX Solutions Guide

© 2021 Litecontrol, a division of Hubbell Lighting, Inc. Specifications subject to change without notice.
65 Spring Street Plympton, MA 02367 / Tel 781.294.0100 / Website www.litecontrol.com

2L-WS-D

MOD™ 2 LED WALL/SLOT DIRECT

PERFORMANCE DATA TABLE

The table below shows the delivered lumens for the various lumen outputs. Use this chart in connection with the output multiplier capability to deliver any output required.

Nomenclature	Lumens/Ft	W/Ft	Efficacy
Downlight			
D030 (min)	300	2.9	102
D050	500	5.2	96
D085	850	8.6	99
D100	1000	12.1	91

(wattage may vary up to 5% from published)

Output Restrictions

Driver options listed below are not available for the output and length as shown.

Restrictions - Direct		Output LPA				
		300	350	400	450	500
Length (feet)	2	LEC, DALI, 347V	LEC, DALI, 347V	DALI, 347V	DALI, 347V	DALI, 347V
	3	DALI, 347V	DALI, 347V			

Output Multiplier Table

Photometrics for the 4L are published here at a nominal 3500K temperature. This table may be used to approximate the lumen values at different Kelvin temperatures. Power consumption would stay the same.

Option	2700K	3000K	3500K	4000K	5000K	2700K 90 CRI	3000K 90 CRI	3500K 90 CRI	4000K 90 CRI	5000K 90 CRI
SOF	0.95	0.98	1.00	1.03	1.05	0.83	0.85	0.88	0.90	0.93
REG	0.73	0.75	0.77	0.79	0.81	0.64	0.65	0.68	0.69	0.72
BWO	0.67	0.69	0.70	0.72	0.76	0.63	0.53	0.47	0.42	0.39
ASYM	0.95	0.98	1.00	1.03	1.05	0.83	0.85	0.88	0.90	0.93
BAT	0.95	0.98	1.00	1.03	1.05	0.83	0.85	0.88	0.90	0.93
DRP	0.95	0.98	1.00	1.03	1.05	0.83	0.85	0.88	0.90	0.93
LPAD	0.86	0.88	0.90	0.93	0.95	0.75	0.77	0.79	0.81	0.84

© 2021 Litecontrol, a division of Hubbell Lighting, Inc. Specifications subject to change without notice.
65 Spring Street Plympton, MA 02367 / Tel 781.294.0100 / Website www.litecontrol.com

2L-WS-D

MOD™ 2 LED WALL/SLOT DIRECT

DIMENSIONS

Ceiling Types:

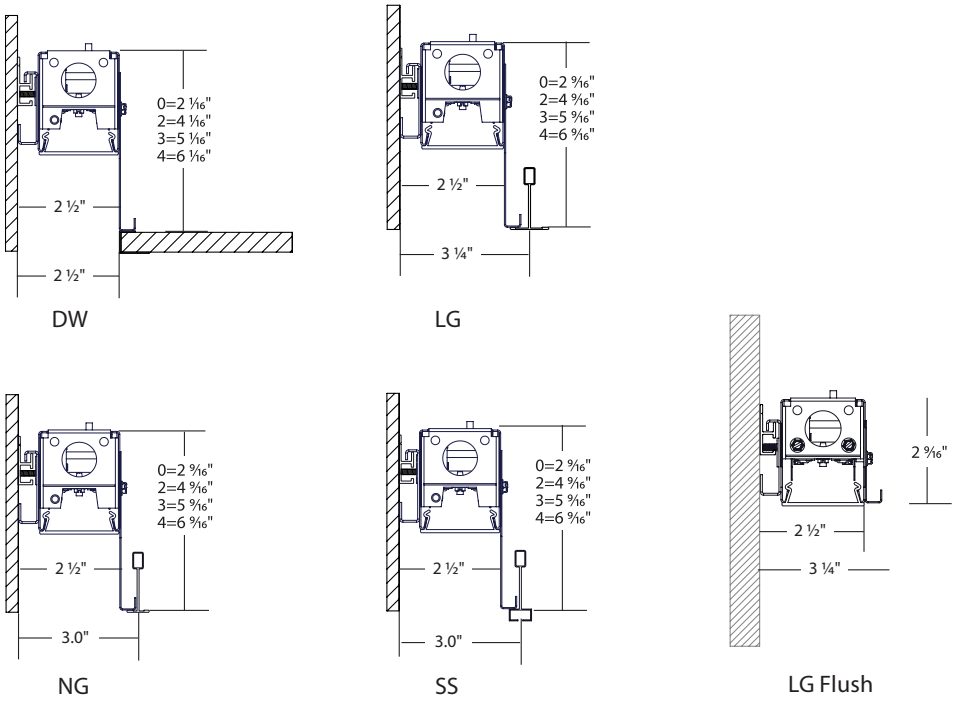

INDIVIDUAL MOUNTING

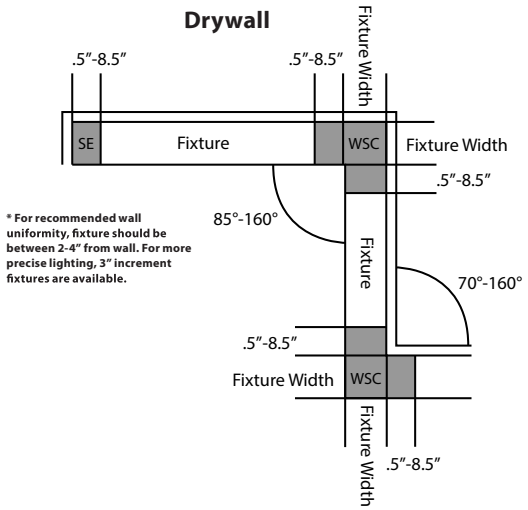

* For recommended wall uniformity, fixture should be between 2-4" from wall. For more precise lighting, 3" increment fixtures are available.

PATTERNS

© 2021 Litecontrol, a division of Hubbell Lighting, Inc. Specifications subject to change without notice.
65 Spring Street Plympton, MA 02367 / Tel 781.294.0100 / Website www.litecontrol.com

Columbia LIGHTING

MPS

MULTIPURPOSE LINEAR

DATE:	LOCATION:
TYPE: T1/T1E	PROJECT:
CATALOG #:	

FEATURES

- Uninterrupted ribbon of light; row mounting optional
- Long life 60,000 hour LEDs at L80 for reduced maintenance
- Superior color consistency within a 3-step MacAdam ellipse and greater than 80 CRI
- Available in 2', 4' or 8' lengths
- Optional integral emergency battery pack
- Three lens options as well as less lens (NL)
- Modular replaceable LED boards and driver accessible for future maintenance or upgrades
- Surface mount, wall mount or suspended

Built to UL 924 Standards

See Certification Specifications

RELATED PRODUCTS

Revalume™ Linear Wrap Reverie™ Decorative Low Bay

End View—Curve Lens

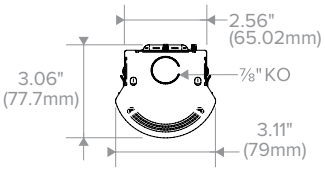

End View—Flat Lens

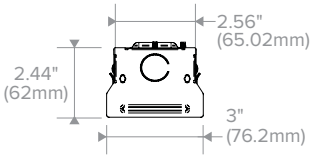

CONTROLS TECHNOLOGY

SpectraSync™ Color Tuning Technology NX DISTRIBUTED™ INTELLIGENCE SPECTRASAFE™

SPECIFICATIONS

CONSTRUCTION

- Housing, wireway, and ends are formed from code-gauge steel
- Housing components act as heat sink for LED heat dissipation
- White painted parts are treated with a five stage phosphate bonding process and finished with high reflectance baked enamel

OPTICS

- Available with or without frosted acrylic lens

INSTALLATION

- Knockouts are provided for electrical access and mounting

ELECTRICAL

- Long-life LEDs are rated for 60,000 hours at L80 lumen maintenance
- Driver options include fixed output for on/off function, step dimming (high/low/off), or continuous 0–10V dimming
- Superior drivers and long-life LEDs provide quality illumination for prolonged service life
- Drivers < 10% THD at 120V, power factor > 0.95

CONTROLS

- Optional SpectraSync™ offers two modes of Tunable White solutions and integrates seamlessly into a variety of control systems
- NX Distributed Intelligence™ provides options for standalone and networked integrated sensor with wired or wireless connectivity for NX system deployments

TECHNOLOGY

- SpectraSAFE™ is a scalable, cloud-enabled and lighting-based wireless video security solution for interior commercial and industrial applications

CERTIFICATIONS

- IC label is standard for recessed products
- All luminaires are built to UL 1598 and 2108 standards, and bear appropriate cCSAus labels
- Damp Location label standard
- CSA certified to UL 924 standards with battery pack or DTS (Dimming Bypass Module) options

CERTIFICATIONS (CONTINUED)

- Adheres to LM79, LM80, and TM21 industry standards
- The DTS, Dimming Bypass Module, is for emergency circuit control loads including sensors and wireless systems CSA certified to UL 924. See page 10 for wiring diagram. Link to Dimming Bypass Module Specification sheet
- This product qualifies as a "designated country construction material" per FAR 52.225-11 Buy American-Construction Materials under Trade Agreements effective 06/01/2020. See Buy American Solutions

WARRANTY

- 5 year warranty
- See HLI Standard Warranty for additional information

KEY DATA	
Lumen Range	1600–16,732
Wattage Range	13–113
Efficacy Range (LPW)	128–155
Reported Life (Hours)	L80/60,000

© 2022 Columbia Lighting, a division of Hubbell Lighting, Inc. Specifications subject to change without notice.
701 Millennium Blvd • Greenville, SC 29607 / Tel 864.678.1000 / Website www.columbialighting.com

HUBBELL Lighting

Columbia LIGHTING

MPS

MULTIPURPOSE LINEAR

DATE:	LOCATION:
TYPE: T1/T1E	PROJECT:
CATALOG #:	

ORDERING GUIDE

Example: MPS4–40ML–CW–EDU

CATALOG # _____

MPS	4		–	40	LW	–	C	W	–	
Model	**Size**[1]	**CRI**		**Color Temp**	**Nominal Lumens**		**Lens**	**Distribution**[3]		**Driver**
MPS MultiPurpose Linear	**2** 2'	**Blank** >80		**30** 3000K	**XW** 4' (2600), 8' (5200)		**C** Curve, Frosted Acrylic	**N** Narrow Distribution[4]		**E** Fixed Output
	4 4'	**9** 90		**35** 3500K	**VW** 2'(1600), 4'(3300), 8' (6600)		**F** Flat, Frosted Acrylic	**W** Wide Distribution		**ED** 0-10V Dimming
	8 8'			**40** 4000K	**MW** 2'(2200), 4'(3600), 8' (7200)		**NL** Less Lens			**ED1** 0-10V 1% Dimming
				50 5000K	**LW** 2'(2400), 4'(4000), 8' (7900)		**CP** Curve, Frosted Polycarbonate			**EDD** 0-10V Dim-to-Dark
				2750T 2700K–5000K SpectraSync™ Tunable White[2]	**ML** 2'(3400), 4'(4500), 8' (8900)					**ESD** Step Dimming
					HL 2'(3700), 4'(5800), 8' (11,500)					**LUTH** Hi-lume 1% EcoSystem LED driver with Soft-on, Fade-to-Black dimming technology[5]
					VL 4' (6800), 8' (13,500)					
				2765T 2700K–6500K SpectraSync™ Tunable White[2]	**XL** 4' (7,800), 8' (15,500)					**DALIP** DALI Power Bus[6]

T1E with emergency battery pack

U	–	ELL14H2	–	
Voltage		**Options**		**Control Options**[22, 23, 24]
U 120V-277V		**ELL14** Emergency Battery Pack, 10W[7, 8, 9]		**NX / BTSMP Standalone**
347 347V (E, ED, ED1 only)		**ELL14H2** Emergency Battery Pack, 2-Hour Run Time[7, 8, 9, 10]		**NXS** NX, PIR BT Occupancy/Daylight Sensor, Slide Mount[25, 26]
		GLR Fast Blow Fuse		**BTSL** BTSMP-LMI, PIR BT Occupancy/Daylight[25, 26]
		GTD Generator Transfer Device[11]		**NX Networked – Wired**
		DTS Dimming Bypass Module[12]		**NXE** NX, Dual SmartPORTs[25, 26, 27]
		MPSCE Injection Molded ABS Material Curve Endcap[22]		**NXES** NX, PIR BT Occupancy/Daylight Sensor, Slide Mount, Dual SmartPORTs[25, 26, 27]
		MPSCE-MB Injection Molded ABS Material Curve Endcap, Matte Black		**NX Networked – Wireless**
		MPSFE Injection Molded ABS Material Flat Endcap[22]		**NXSW** NX Wireless, PIR BT Occupancy/Daylight Sensor[25, 26]
		MPSFE-MB Injection Molded ABS Material Flat Endcap, Matte Black		**NXWE** NX Wireless Enabled[25, 26]
		MB Matte Black		**Third-Party Control Options**
		ZT ZET Metallic Silver		**ODPG** Occupancy and Daylight Sensors w/ Grouping, Philips SNS200[28, 29]
		PAF Painted After Fabrication		**LVR** Lutron Vive Integral Fixture Control DFCSJ-OEM-RF (RF only)[28, 29, 30]
		SAF SpectraSAFE™ Integrated Surveillance Lighting System[13]		**LVS** Lutron Vive Integral Fixture Control DFCSJ-OEM-OCC (RF with daylight and occupancy sensing)[28, 29, 30]
		MST MASTER fixture that controls one or more SATELLITE fixtures in a continuous row application[14, 15, 16, 17, 18, 19, 20]		
		SAT SATELLITE fixture controlled by MASTER fixture in a continuous row application[15, 16, 17, 18, 19, 20]		
		INT Intermediate (provides ends with wiring access for continuous row mounting)[17, 19, 20, 21]		
		EOR End of Row (provides end wiring access for continuous row mounting)[17, 19, 20, 21]		

Accessories

- ☐ **S18** 18" Stem, Canopy
- ☐ **SS18** 18" Swivel Stem—45° Swivel
- ☐ **CM24SCF3-KIT** 24" Adjustable Cable Mounting Kit, 3-wire feed[31]
- ☐ **CM48SCF3-KIT** 48" Adjustable Cable Mounting Kit, 3-wire feed[31]
- ☐ **CM24NF-KIT** Single Point Non-Feed Cable Mount with Canopy, Single - 24"[31]
- ☐ **CM48NF-KIT** Single Point Non-Feed Cable Mount with Canopy, Single - 48"[31]
- ☐ **CSHC** Chain Hanger Assembly
- ☐ **MPSZT** Zip Tee Hanger - 1 ½" Spacer on T-Bar Ceiling
- ☐ **MPSTH** Slide Tong Hanger
- ☐ **MPSCRK-C** Continuous Row Kit, Curve
- ☐ **MPSCRK-F** Continuous Row Kit, Flat
- ☐ **MPSWG2** 2' Wire Guard
- ☐ **MPSWG4** 4' Wire Guard, two Required for 8' Fixture
- ☐ **MPSCE** Injection Molded ABS Material Curve Endcap
- ☐ **MPSCE-MB** Injection Molded ABS Material Curve Endcap, Matte Black
- ☐ **MPSFE** Injection Molded ABS Material Flat Endcap
- ☐ **MPSFE-MB** Injection Molded ABS Material Flat Endcap, Matte Black

Notes:
1 For continuous row mounting, see Continuous Row Mount Example Guide on page 3
2 See SpectraSync and NX Availability Table on page 6
3 Applicable to lens only
4 Only available with Curve, Frosted Acrylic lens
5 Not available in VL or XL packages
6 DALIP only available when LVS, LVR or ODPG control options are selected
7 Delivered Emergency Lumens = ELL14 = 1210 lms
8 Not available in 2ft size or with thru wire on XL 4ft and 8ft
9 Emergency battery pack max ambient temperature: 25˚C
10 Not available for use in Canada
11 Only available with fixed output driver
12 For emergency circuit control loads including sensors and wireless systems CSA certified to UL 924. Not availble with ESD driver option. Universal voltage only. DTS with 2' cannot be combined with Controls or SpectraSync options. See page 10 for wiring diagram
13 SpectraSync+NX+SAF can not be configured. Only available with NXE or NXWE. Not available in 347V

Continuous-Row Options:
14 MST option not available with INT row position
15 Multiple SAT fixtures can be controlled by one MST fixture. Any one SAT fixture can have no more than one connected MST fixture
16 NX is supported for this application, consult Brand for use with other controls systems
17 Not available with DTS,GTD,ATSD
18 Not available with LUTH
19 All fixtures in a row must be the same driver type and voltage
20 Includes quick-connect wiring harness
21 Suspension support required at every fixture coupling; see Mounting Accessories Guide

NX In-Fixture Control Options:
22 Standard PAF when this option is chosen
23 Control Options include Injection Molded ABS End Cap
24 Fixtures with Control Options are Dry Location rated only
25 Only available with 0–10V dimming drivers (ED, ED1 & EDD)
26 Not available in 2ft when SpectraSync and SpectraSAFE are chosen
27 Not available with surface mounting

Third-Party Control Options:
28 LVS, LVR and ODPG only available with DALIP driver option
29 Not available with SpectraSync (2750T or 2765T)
30 VIVE is a trademark of Lutron Electronics Co., Inc

Accessory Notes:
31 See Columbia Mounting Accessories page for additional options

© 2022 Columbia Lighting, a division of Hubbell Lighting, Inc. Specifications subject to change without notice.
701 Millennium Blvd • Greenville, SC 29607 / Tel 864.678.1000 / Website www.columbialighting.com

HUBBELL Lighting

ORDERING GUIDE (CONTINUED)

CONTINUOUS ROW MOUNT EXAMPLE GUIDE					
Continuous Row Length	MPS4	MPS8	MPSCRK-*	CM**SCF*-KIT	CM**NF-KIT
12' — Option 1	1	1	1	1	1
12' — Option 2	3	0	2	1	1
16' — Option 1	0	2	1	1	1
16' — Option 2	2	1	2	1	2
32' — Option 1	0	4	3	2	1
32' — Option 2	2	3	4	2	1

Link to Columbia Mounting Accessories page

PRODUCT EXCEPTIONS & DETAILS

Driver options listed below are available for the outputs as shown.

DRIVER AVAILABILITY TABLE — 2'					
	VW	MW	LW	ML	HL
E	x	x	x	x	x
ED	x	x	x	x	x
ED1	x	x	x	x	x
EDD	x	x	x	x	x
ESD	x	x	x	x	x
LUTH	x	x	x	x	x
347	x	x	x	x	x
DALIP	x	x	x	x	x

DRIVER AVAILABILITY TABLE — 4' & 8'								
	XW	VW	MW	LW	ML	HL	VL	XL
E	x	x	x	x	x	x	x	x
ED	x	x	x	x	x	x	x	x
ED1	x	x	x	x	x	x	x	x
EDD	x	x	x	x	x	x	x	x
ESD	x	x	x	x	x	x	x	x
347	x	x	x	x	x	x	x	x
LUTH	x	x	x	x	x	x		
DALIP	x	x	x	x	x	x	x	x

TEMPERATURE TABLE (C°) — 4' & 8'											
		80 CRI									
		E/ED/ED1		ESDU		ED347		EDD		LUT	
Size	Lumen Package	Ceiling/ Surface Mount	Pendant/ TH Mount	Ceiling/ Surface Mount	Pendant/ TH Mount	Ceiling/ Surface Mount	Pendant/ TH Mount	Ceiling/ Surface Mount	Pendant/ TH Mount	Ceiling/ Surface Mount	Pendant/ TH Mount
2'	VW	35	40	35	40	35	40	35	40	35	40
	MW	35	40	35	40	35	40	35	40	35	40
	LW	35	40	35	40	35	40	35	40	35	40
	ML	35	40	35	40	35	40	35	40	35	40
	HL	30	35	30	35	30	35	30	35	30	35
	XW	35	45	35	45	35	45	30	35	30	35
4'	VW	35	45	35	45	35	45	30	35	30	35
	MW	35	45	35	45	35	45	30	35	30	35
	LW	35	45	35	45	35	45	30	35	30	35
	ML	35	45	35	45	35	45	30	35	30	35
	HL	35	40	35	40	35	40	25	30	30	35
	VL	30	30	30	30	30	30	30	30	—	—
	XL*	25	25	25	25	25	25	25	25	—	—
8'	XW	35	45	35	45	35	45	30	35	30	35
	VW	35	45	35	45	35	45	30	35	30	35
	MW	35	45	35	45	35	45	30	35	30	35
	LW	35	45	35	45	35	45	30	35	30	35
	ML	35	45	35	45	35	45	30	35	30	35
	VL	30	30	30	30	30	30	30	30	—	—
	XL*	25	25	25	25	25	25	25	25	—	—

*XL not available with thru wire

© 2022 Columbia Lighting, a division of Hubbell Lighting, Inc. Specifications subject to change without notice.
701 Millennium Blvd • Greenville, SC 29607 / Tel 864.678.1000 / Website www.columbialighting.com

HUBBELL Lighting

CONTROLS

NX Distributed Intelligence™ Lighting Controls:

Supports both indoor and outdoor applications in a variety of deployment options- wired, wireless, hybrid.
Integrates with and enables a wide array of luminaires including those with SpectraSync™ Color Tuning Technology.

NX DISTRIBUTED™ INTELLIGENCE

NX INTEGRATED CONTROLS REFERENCE								
NX Option	Sensor	Networkable	Scheduling	Occupancy	Daylight Harvesting	0–10V Dimming	On/off Control	Bluetooth® App Programming
NX Standalone								
NXS	NXSMP-SMI	No	Yes	Yes	Yes	Yes	Yes	Yes
NX Networked – Wired								
NXE	N/A	Yes	Yes	No	No	Yes	Yes	Requires NXBTC/R[1]
NXES	NXSMP-SMI	Yes	Yes	Yes	Yes	Yes	Yes	Yes
NX Networked – Wireless								
NXSW	NXSMP-SMI	Yes	Yes	Yes	Yes	Yes	Yes	Yes
NXWE	N/A	Yes	Yes	No	No	Yes	Yes	No[2]

1 NXBTC/R needs to be plugged into an available NX SmartPORT™ on the fixture network
2 To program NXWE option, need to consult factory. If connected to an area controller, programming can be done from that

Philips EasySense Controls ODPG Sensor:

- Occupancy sensing, daylight harvesting, task tuning and grouping in one device
- Standalone control or grouping to wireless switches[1]
- Uses Philips field apps for on site commissioning[2,3]
- Ability to create scenes for various room configurations
- Cost-effective solution for energy-savings and code-compliancy strategies
- DLC® Qualified: Listed on the QPL for Networked Lighting Controls. Please refer to the DLC website for specific product qualifications at www.designlights.org

1 Wireless switches only compatible with ODPG Philips EasySense
2 See link to Philips commssioning
3 Requires android device or IR dongle. See links for phone compatiblity and IR dongle

Wireless Switch Accessories[1]

- ☐ PESR-WH — EasySense compatible wireless single rocker switch, white
- ☐ PEDR-WH — EasySense compatible wireless dual rocker switch, white

SPECTRASAFE

SpectraSAFE™ Integrated Surveillance Lighting System

Technical Features

- High resolution 1080p full HD camera
- 2.8mm lens / 140° field of view
- IR emitter for low / no-light conditions
- Multiple wiring configurations available
- Supports 2-way audio communication
- Supports 2.4GHz WPA-PSK/WPA2-PSK Wi-Fi
- Data encrypted using AES 256 standard
- Low power consumption (2-5W)
- Transmissions secured using Open TLS / SSL

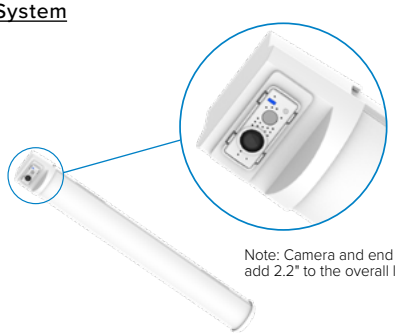

Note: Camera and end cap add 2.2" to the overall length.

Software & Support

- Free Android, iOS and web-based app
- Versatile and supports multiple applications
- Multi-tenant web-based camera application
- Phone and in-app chat technical support
- Scalable cloud services and video storage
- Supported by a 5-year warranty

SPECTRASAFE WIRING DIAGRAM

Power Supply	
Pin Connections	
Pin#	Single
1	VAC in (N)
5	VAC in (L)
7	+Vout
9	-Vout

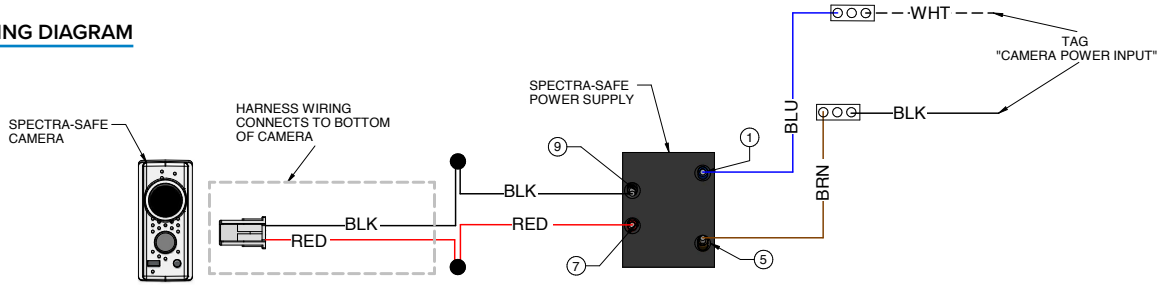

NX Design & Application Guide
NX Brochure
Philips SNS200
ES Design-in Guide
SpectraSAFE Brochure

© 2022 Columbia Lighting, a division of Hubbell Lighting, Inc. Specifications subject to change without notice.
701 Millennium Blvd • Greenville, SC 29607 / Tel 864.678.1000 / Website www.columbialighting.com

HUBBELL Lighting

CONTROLS (CONTINUED)

SpectraSync™ Color Tuning Technology:

Control your space based on the needs of the application, specific activities throughout the day and preferences of the occupants with distinct SpectraSync™ Color Tuning Technologies.

SPECTRASYNC COLOR TUNING TECHNOLOGY		
Mode	Kelvin Range	Description
Tunable White	2700K–5000K 2700K–6500K	Offers users the ability to tailor CCT to their personal preference, enhancing task visibility, material and colors or the aesthetics of the space

SpectraSync Tunable White

Available in two options: 2750T (2700K–5000K) or 2765T (2700K–6500K).
Requires two 0–10V controllers, one for intensity and one for CCT.
Minimum 5% dimming.

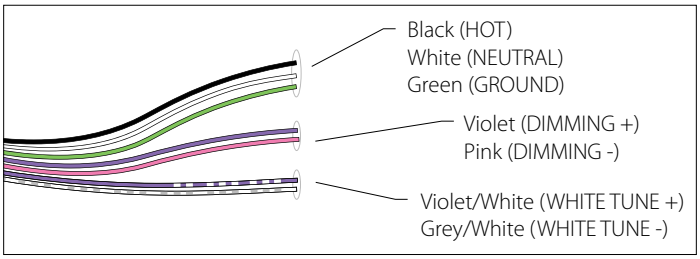

SpectraSync Tunable White luminaires are provided with two 0–10V circuits. The violet and pink circuit is for wiring to any qualified 0–10V controller for dimming. The violet/white and grey/white circuit is for wiring to any qualified 0–10V controller for Tunable White CCT control.

Controller Manufacturer Data

SpectraSync Tunable White was designed to be used with sinking style dimmers (provided by others) and is compatible with:

- Hubbell Control Solutions (HCS): NX Distributed Intelligence™ Room Controllers (NXRC) and In-fixture Controllers (NXFM)
- Lutron: DVTV, DVSTV, and NFTV dimmers
- Wattstopper: ADF120277 and CD4BL (Titan) dimmers

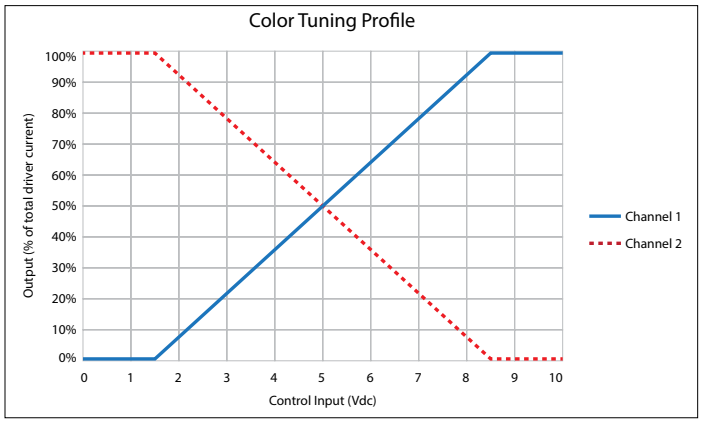

To enable scheduling and for use with NX wall control preset stations please refer to Hubbell Control Solutions NX SpectraSync technical sheet.

SPECTRASYNC™ AND NX AVAILABILITY TABLE

		Only With 80 CRI			Only With 80 CRI		
		No Battery Pack			With Battery Pack		
Size	Lumen package	CTC	NX	CTC+NX	CTC	NX	CTC+NX
2ft	VW	Y	Y	N	—	—	—
	MW	Y	Y	N	—	—	—
	LW	Y	Y	N	—	—	—
	ML	N	Y	N	—	—	—
	HL	N	Y	N	—	—	—
4ft	XW	Y	Y	Y	Y	Y	Y
	VW	Y	Y	Y	Y	Y	Y
	MW	Y	Y	Y	Y	Y	Y
	LW	Y	Y	Y	Y	Y	Y
	ML	Y	Y	Y	Y	Y	Y
	HL	Y	Y	Y	Y	Y	Y
	VL	N	Y	N	N	Y	N
	XL	N	Y	N	N	Y	N
8ft	XW	Y	Y	Y	Y	Y	Y
	VW	Y	Y	Y	Y	Y	Y
	MW	N	Y	N	N	Y	N
	LW	N	Y	N	N	Y	N
	ML	N	Y	N	N	Y	N
	HL	N	Y	N	N	Y	N
	VL	N	Y	N	N	Y	N
	XL	N	Y	N	N	Y	N

© 2022 Columbia Lighting, a division of Hubbell Lighting, Inc. Specifications subject to change without notice.
701 Millennium Blvd • Greenville, SC 29607 / Tel 864.678.1000 / Website www.columbialighting.com

Columbia LIGHTING

MPS

MULTIPURPOSE LINEAR

DATE: | LOCATION:

TYPE: T1/T1E | PROJECT:

CATALOG #:

DELIVERED LUMENS

STANDARD EFFICACY PERFORMANCE TABLE						
FIXTURE	COLOR	LENS	DISTRIBUTION	LUMENS	INPUT WATTS	LPW
MPS4-XW	3500K	CURVE	WIDE	2,544	18.1	141
		CURVE	NARROW	2,490	18.1	138
		FLAT	WIDE	2,460	18.1	136
		No Lens		2,719	18.1	150
	4000K	CURVE	WIDE	2,573	18.1	142
		CURVE	NARROW	2,518	18.1	139
		FLAT	WIDE	2,488	18.1	137
		No Lens		2,750	18.1	152
MPS4-VW	3500K	CURVE	WIDE	3,223	23.6	137
		CURVE	NARROW	3,221	23.6	137
		FLAT	WIDE	3,073	23.5	131
		No Lens		3,454	23.6	146
	4000K	CURVE	WIDE	3,258	23.6	138
		CURVE	NARROW	3,256	23.6	138
		FLAT	WIDE	3,107	23.5	132
		No Lens		3,492	23.6	148
MPS4-MW	3500K	CURVE	WIDE	3,541	26.7	133
		CURVE	NARROW	3,504	26.7	131
		FLAT	WIDE	3,453	26.8	128
		No Lens		3,811	26.7	143
	4000K	CURVE	WIDE	3,580	26.7	134
		CURVE	NARROW	3,543	26.7	133
		FLAT	WIDE	3,491	26.8	130
		No Lens		3,853	26.7	144
MPS4-LW	3500K	CURVE	WIDE	3,878	27.3	142
		CURVE	NARROW	3,836	27.4	140
		FLAT	WIDE	3,753	27.4	137
		No Lens		4,172	27.4	152
	4000K	CURVE	WIDE	3,921	27.3	144
		CURVE	NARROW	3,878	27.4	142
		FLAT	WIDE	3,794	27.4	138
		No Lens		4,218	27.4	154
MPS4-ML	3500K	CURVE	WIDE	4,419	31.6	140
		CURVE	NARROW	4,370	31.6	138
		FLAT	WIDE	4,230	31.6	134
		No Lens		4,784	31.7	151
	4000K	CURVE	WIDE	4,468	31.6	141
		CURVE	NARROW	4,418	31.6	140
		FLAT	WIDE	4,277	31.6	135
		No Lens		4,837	31.7	153
MPS4-HL	3500K	CURVE	WIDE	5,658	41.7	136
		CURVE	NARROW	5,592	41.7	134
		FLAT	WIDE	5,393	41.5	130
		No Lens		5,489	41.8	131
	4000K	CURVE	WIDE	5,720	41.7	137
		CURVE	NARROW	5,654	41.7	136
		FLAT	WIDE	5,452	41.5	131
		No Lens		5,549	41.8	133
MPS4-VL	3500K	CURVE	WIDE	6,643	47.1	141
		CURVE	NARROW	6,571	47.1	140
		FLAT	WIDE	4,983	36.3	137
		No Lens		7,217	47.2	153
	4000K	CURVE	WIDE	6,717	47.1	143
		CURVE	NARROW	6,644	47.1	141
		FLAT	WIDE	5,038	36.3	139
		No Lens		7,297	47.2	155
MPS4-XL	3500K	CURVE	WIDE	7,646	56.4	136
		CURVE	NARROW	7,522	56.4	133
		FLAT	WIDE	7,325	56.6	129
		No Lens		8,273	56.6	146
	4000K	CURVE	WIDE	7,732	56.4	128
		CURVE	NARROW	7,608	56.4	135
		FLAT	WIDE	7,408	56.6	131
		No Lens		8,366	56.6	148
MPS8-XW	3500K	CURVE	WIDE	5,089	36.2	141
		CURVE	NARROW	4,980	36.2	138
		FLAT	WIDE	4,921	36.2	136
		No Lens		5,439	36.2	150
	4000K	CURVE	WIDE	5,146	36.2	142
		CURVE	NARROW	5,037	36.2	139
		FLAT	WIDE	4,977	36.2	137
		No Lens		5,500	36.2	152

© 2022 Columbia Lighting, a division of Hubbell Lighting, Inc. Specifications subject to change without notice.
701 Millennium Blvd • Greenville, SC 29607 / Tel 864.678.1000 / Website www.columbialighting.com

HUBBELL Lighting

Columbia LIGHTING

DATE:	LOCATION:
TYPE: T2E	PROJECT:
CATALOG #:	

RLW

REVALUME™ LINEAR WRAP

FEATURES

- Uninterrupted ribbon of light for single or row mount applications
- Optional integral emergency battery pack
- Decorative injection molded ABS material endcaps
- Modular replaceable LED boards and driver accessible for future maintenance or upgrades
- Surface mount, stem mount or cable mount
- DLC® (Design Lights Consortium) Qualified - see www.designlights.org

Built to UL 924 Standards

BUY AMERICAN SOLUTIONS

See Certification Specifications

RELATED PRODUCTS

- Reverie™ Decorative Low Bay
- Multipurpose Linear

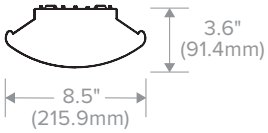

END VIEW (ALL SIZES)

CONTROLS TECHNOLOGY

SpectraSync™ Color Tuning Technology · NX DISTRIBUTED™ INTELLIGENCE · SPECTRASAFE™

SPECIFICATIONS

CONSTRUCTION

- Housing, and wireway are formed from code-gauge steel
- Back of housing knockouts are provided for electrical access and mounting
- Decorative injection molded ABS material endcaps

SHIELDING

- Round frosted acrylic lens offers a smooth appearance and even light distribution

FINISH

- White painted parts are treated with a five-stage phosphate bonding process and finished with high reflectance baked enamel

ELECTRICAL

- Long-life LEDs are rated for 60,000 hours at L80 lumen maintenance
- Driver options include fixed output for on/off function, step dimming (high/low/off), or continuous 0–10V dimming
- Superior drivers and long-life LEDs provide quality illumination for prolonged service life. Drivers < 10% THD at 120V, power factor > 0.95

CONTROLS

- Optional SpectraSync™ offers two modes of tunable white solutions and integrates seamlessly into a variety of control systems
- NX Distributed Intelligence™ provides options for standalone and networked integrated sensor with wired or wireless connectivity for NX system deployments

TECHNOLOGY

- SpectraSAFE™ is a scalable, cloud-enabled and lighting-based wireless video security solution for interior commercial and industrial applications

CERTIFICATION

- All luminaires are built to UL 1598 and 2108 standards, and bear appropriate CSA labels.
- Damp location labeling is standard
- CSA certified to UL 924 standards with battery pack or DTS (Dimming Bypass Module) options
- Adheres to LM79, LM80, and TM21 industry standards

CERTIFICATION (CONTINUED)

- The DTS, Dimming Bypass Module, is for emergency circuit control loads including sensors and wireless systems CSA certified to UL 924. See page 6 for wiring diagram. Link to Dimming Bypass Module Specification sheet
- This product qualifies as a "designated country construction material" per FAR 52.225-11 Buy American-Construction Materials under Trade Agreements effective 06/01/2020. See Buy American Solutions

WARRANTY

- 5 year warranty
- See HLI Standard Warranty for additional information

KEY DATA	
Lumen Range	1513–14711
Wattage Range	12–112
Efficacy Range (LPW)	115–144
Reported Life (Hours)	L80/60,000

© 2021 Columbia Lighting, a division of Hubbell Lighting, Inc. Specifications subject to change without notice.
701 Millennium Blvd • Greenville, SC 29607 / Tel 864.678.1000 / Website www.columbialighting.com

HUBBELL Lighting

Columbia LIGHTING

RLW

REVALUME™ LINEAR WRAP

DATE:	LOCATION:
TYPE: T2E	PROJECT:
CATALOG #:	

ORDERING GUIDE

Example: RLW4-40ML-FAW-EDU

CATALOG # _____

RLW	4	–	40	HL	–	FA	W	–
Model	**Size**		**Color Temp**	**Nominal Lumens [2]**		**Shielding**	**Distribution**	

Model		Size	
RLW	Revalume™ Linear Wrap	**2**	2'
		4	4'
		8	8'

Color Temp	
30	3000K
35	3500K
40	4000K
50	5000K
2750T	2700K–5000K SpectraSync™ Tunable White[1]
2765T	2700K–6500K SpectraSync™ Tunable White[1]

Nominal Lumens [2]	
XW	4' (2700), 8' (5400)[3]
VW	2' (1600), 4' (3400), 8' (6800)[3]
MW	2' (2200), 4' (3800), 8' (7700)[3]
LW	2' (2600), 4' (4200), 8' (8500)[3]
ML	2' (3400), 4' (5300), 8' (9800)[3]
HL	2' (3800), 4' (6000), 8' (11,800)[4]
VL	2' (4500), 4' (7800), 8' (14,200)[4]

Shielding	
FA	Frosted Acrylic

Distribution	
W	Wide

ED	U	–	ELL14	NXOS - PROVIDE FIXTURE MOUNTED OS
Driver	**Voltage**		**Options**	**Control Options**

Driver	
E	Fixed Output
ED	0-10V Dimming
ED1	0-10V 1% Dimming
EDD	0-10V Dim-to-Dark
ESD	Step Dimming
LUTH	Hi-lume 1% EcoSystem LED driver with Soft-on, Fade-to-Black dimming technology
DALIP	DALI Power Bus[5]

Voltage	
U	120–277V
347	347V

Options	
ELL14	Emergency Battery Pack, 1400 Lumens[6]
GTD	Generator Transfer Device[7]
DTS	Dimming Bypass Module[8]
GLR	Fast Blow Fuse
INT	Intermediate (provides ends with wiring access for continuous row mounting)[9, 10, 11, 12, 13]
EOR	End of Row (provides end wiring access for continuous row mounting)[10, 11, 12, 13]
SAF	SpectraSAFE™ Integrated Surveillance Lighting System[14]
MST	MASTER fixture that controls one or more SATELLITE fixtures in a continuous row application[10, 11, 12, 15, 16, 17, 18]
SAT	SATELLITE fixture controlled by MASTER fixture in a continuous row application[10, 11, 12, 16, 17, 18]

Control Options	
NX Standalone	
NXOS	NX, PIR BT Occupancy/Daylight Sensor, Round Ceiling Mount[19]
Third-Party Control Options	
LVR	Lutron Vive Integral Fixture Control DFCSJ-OEM-RF (RF only)[20, 21, 22]
LVS	Lutron Vive Integral Fixture Control DFCSJ-OEM-OCC (RF with daylight and occupancy sensing)[20, 21, 22]
ODPG	Occupancy and Daylight Sensors w/ Grouping, Philips SNS200[20, 22]

Accessories (Order Separately)	
RLWWG2	2' Wire Guard
RLWWG4	4' Wire Guard
S18	18" Stem, Canopy
SS18	18" Swivel Stem–45°Swivel
CM24SCF3-KIT	24" Adjustable Cable Mounting Kit, 3-wire feed
CM48SCF3-KIT	48" Adjustable Cable Mounting Kit, 3-wire feed

Notes:

1 Only available with ED driver
2 Nominal Lumens. Refer to performance tables for exact values and available lumen outputs for fixture size
3 RLW4' & RLW8' lumen packages XW - ML qualified up to 40°C
4 RLW4' & RLW8' lumen packages HL & VL qualified up to 35°C
5 DALIP only available when LVS, LVR or ODPG control options are selected
6 For compatibility with Dual-Lite LiteGear® inverters in lieu of installed battery pack, contact Hubbell Lighting representative. Not available with 2'
7 Available for universal voltage and fixed output driver options only
8 For emergency circuit control loads including sensors and wireless systems CSA certified to UL 924. Only available with 0-10V drivers. Universal voltage only. See page 6 for wiring diagram
9 Suspension support required at every fixture coupling; see Mounting Accessories Guide
10 Not available with DTS, GTD or ATSD
11 All fixtures in a row must be the same driver type and voltage
12 Includes quick-connect wiring harness
13 A row-connector kit will be included with each fixture when EOR or INT is selected
14 Not available with Control Options. Not available in 347. Not available with through wiring
15 MST option not available with INT row position
16 Multiple SAT fixtures can be controlled by one MST fixture. Any one SAT fixture can have no more than one connected MST fixture
17 NX is supported for this application, consult Brand for use with other controls systems
18 Not available with LUTH

NX In-Fixture Control Options:

19 Only available with ED and ED1 drivers. Universal voltage only

Third-Party Control Options:

20 LVS, LVR and ODPG only available with DALIP driver option
21 VIVE is a trademark of Lutron Electronics Co., Inc
22 Not available with SpectraSync (2750T or 2765T)

© 2021 Columbia Lighting, a division of Hubbell Lighting, Inc. Specifications subject to change without notice.
701 Millennium Blvd • Greenville, SC 29607 / Tel 864.678.1000 / Website www.columbialighting.com

HUBBELL Lighting

CONTROLS

NX Distributed Intelligence™ Lighting Controls:

Supports both indoor and outdoor applications in a variety of deployment options- wired, wireless, hybrid.
Integrates with and enables a wide array of luminaires including those with SpectraSync Color Tuning Technology.

NX INTEGRATED CONTROLS REFERENCE									
NX Option	Sensor	Networkable	Scheduling	Occupancy	Daylight Harvesting	0–10V Dimming	On/off Control	Bluetooth® App Programming	Commissioning
NX Standalone									
NXOS	NXSMP-OMNI	No	Yes	Yes	Yes	Yes	Yes	Yes	On-site

SpectraSync™ Color Tuning Technology:

Control your space based on the needs of the application, specific activities throughout the day and preferences of the occupants with distinct SpectraSync™ Color Tuning Technologies.

SPECTRASYNC COLOR TUNING TECHNOLOGY		
Mode	Kelvin Range	Description
Tunable White	2700K-5000K 2700K-6500K	Offers users the ability to tailor CCT to their personal preference, enhancing task visibility, material and colors or the aesthetics of the space

SpectraSAFE™ Integrated Surveillance Lighting System

Technical Features

- High resolution 1080p full HD camera
- 2.8mm lens / 140° field of view
- IR emitter for low / no-light conditions
- Multiple wiring configurations available
- Supports 2-way audio communication
- Supports 2.4GHz WPA-PSK/WPA2-PSK Wi-Fi
- Data encrypted using AES 256 standard
- Low power consumption (2-5W)
- Transmissions secured using Open TLS / SSL

Software & Support

- Free Android, iOS and web-based app
- Versatile and supports multiple applications
- Multi-tenant web-based camera application
- Phone and in-app chat technical support
- Scalable cloud services and video storage
- Supported by a 5-year warranty

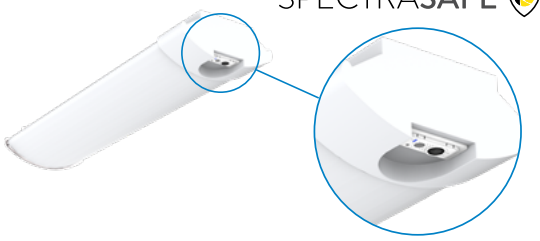

SPECTRASAFE WIRING DIAGRAM

Power Supply Pin Connections	
Pin#	Single
1	VAC in (N)
5	VAC in (L)
7	+Vout
9	-Vout

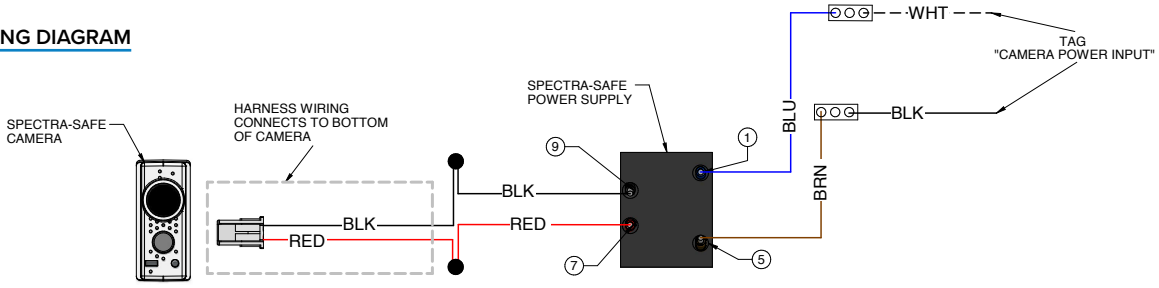

NX Design & Application Guide
NX Brochure
SpectraSync
NX Solutions Guide
SpectraSAFE Brochure

© 2021 Columbia Lighting, a division of Hubbell Lighting, Inc. Specifications subject to change without notice.
701 Millennium Blvd • Greenville, SC 29607 / Tel 864.678.1000 / Website www.columbialighting.com

DELIVERED LUMENS

FIXTURE	COLOR	LUMENS	WATTS	LPW
RLW2-VW	3000K	1513	11.6	130
	3500K	1541	11.6	133
	4000K	1559	11.6	134
	5000K	1612	11.6	139
RLW2-MW	3000K	2020	16.3	124
	3500K	2057	16.3	126
	4000K	2082	16.3	128
	5000K	2152	16.3	132
RLW2-LW	3000K	2553	22.1	116
	3500K	2600	22.1	118
	4000K	2631	22.1	119
	5000K	2720	22.1	123
RLW2-ML	3000K	3297	26.6	124
	3500K	3357	26.6	126
	4000K	3397	26.6	128
	5000K	3511	26.6	132
RLW2-HL	3000K	3594	29.5	122
	3500K	3660	29.5	124
	4000K	3704	29.5	126
	5000K	3828	29.5	130
RLW2-VL	3000K	4354	37.2	117
	3500K	4434	37.2	119
	4000K	4487	37.2	121
	5000K	4638	37.2	125
RLW4-XW	3000K	2711	19.5	140
	3500K	2673	19.4	138
	4000K	2705	19.4	139
	5000K	2755	19.4	142
RLW4-VW	3000K	3275	25.2	130
	3500K	3335	25.2	132
	4000K	3375	25.2	134
	5000K	3488	25.2	138
RLW4-MW	3000K	3854	28.8	134
	3500K	3925	28.8	136
	4000K	3972	28.8	138
	5000K	4106	28.8	143
RLW4-LW	3000K	4174	33.9	123
	3500K	4251	33.9	125
	4000K	4302	33.9	127
	5000K	4447	33.9	131
RLW4-ML	3000K	5128	40.4	127
	3500K	5222	40.4	129
	4000K	5285	40.4	131
	5000K	5462	40.4	135

© 2021 Columbia Lighting, a division of Hubbell Lighting, Inc. Specifications subject to change without notice.
701 Millennium Blvd • Greenville, SC 29607 / Tel 864.678.1000 / Website www.columbialighting.com

HUBBELL Lighting

Columbia LIGHTING

DATE:	LOCATION:
TYPE: T3	PROJECT:
CATALOG #:	

RLW

REVALUME™ LINEAR WRAP

FEATURES

- Uninterrupted ribbon of light for single or row mount applications
- Optional integral emergency battery pack
- Decorative injection molded ABS material endcaps
- Modular replaceable LED boards and driver accessible for future maintenance or upgrades
- Surface mount, stem mount or cable mount
- DLC® (Design Lights Consortium) Qualified - see www.designlights.org

Built to UL 924 Standards

See Certification Specifications

RELATED PRODUCTS

- Reverie™ Decorative Low Bay
- Multipurpose Linear

CONTROLS TECHNOLOGY

SpectraSync™ NX DISTRIBUTED™ INTELLIGENCE SPECTRASAFE™

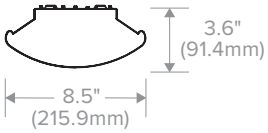

END VIEW (ALL SIZES)

SPECIFICATIONS

CONSTRUCTION

- Housing, and wireway are formed from code-gauge steel
- Back of housing knockouts are provided for electrical access and mounting
- Decorative injection molded ABS material endcaps

SHIELDING

- Round frosted acrylic lens offers a smooth appearance and even light distribution

FINISH

- White painted parts are treated with a five-stage phosphate bonding process and finished with high reflectance baked enamel

ELECTRICAL

- Long-life LEDs are rated for 60,000 hours at L80 lumen maintenance
- Driver options include fixed output for on/off function, step dimming (high/low/off), or continuous 0–10V dimming
- Superior drivers and long-life LEDs provide quality illumination for prolonged service life. Drivers < 10% THD at 120V, power factor > 0.95

CONTROLS

- Optional SpectraSync™ offers two modes of tunable white solutions and integrates seamlessly into a variety of control systems
- NX Distributed Intelligence™ provides options for standalone and networked integrated sensor with wired or wireless connectivity for NX system deployments

TECHNOLOGY

- SpectraSAFE™ is a scalable, cloud-enabled and lighting-based wireless video security solution for interior commercial and industrial applications

CERTIFICATION

- All luminaires are built to UL 1598 and 2108 standards, and bear appropriate CSA labels.
- Damp location labeling is standard
- CSA certified to UL 924 standards with battery pack or DTS (Dimming Bypass Module) options
- Adheres to LM79, LM80, and TM21 industry standards

CERTIFICATION (CONTINUED)

- The DTS, Dimming Bypass Module, is for emergency circuit control loads including sensors and wireless systems CSA certified to UL 924. See page 6 for wiring diagram. Link to Dimming Bypass Module Specification sheet
- This product qualifies as a "designated country construction material" per FAR 52.225-11 Buy American-Construction Materials under Trade Agreements effective 06/01/2020. See Buy American Solutions

WARRANTY

- 5 year warranty
- See HLI Standard Warranty for additional information

KEY DATA	
Lumen Range	1513–14711
Wattage Range	12–112
Efficacy Range (LPW)	115–144
Reported Life (Hours)	L80/60,000

© 2021 Columbia Lighting, a division of Hubbell Lighting, Inc. Specifications subject to change without notice.
701 Millennium Blvd • Greenville, SC 29607 / Tel 864.678.1000 / Website www.columbialighting.com

HUBBELL Lighting

Columbia LIGHTING

RLW

REVALUME™ LINEAR WRAP

DATE:	LOCATION:
TYPE: T3	PROJECT:
CATALOG #:	

ORDERING GUIDE

Example: RLW4-40ML-FAW-EDU

CATALOG #

RLW	4	–	40	LW	–	FA	W	–
Model	**Size**		**Color Temp**	**Nominal Lumens [2]**		**Shielding**	**Distribution**	

Model		Size	
RLW	Revalume™ Linear Wrap	**2**	2'
		4	4'
		8	8'

Color Temp		Nominal Lumens [2]	
30	3000K	**XW**	4' (2700), 8' (5400) [3]
35	3500K	**VW**	2' (1600), 4' (3400), 8' (6800) [3]
40	4000K	**MW**	2' (2200), 4' (3800), 8' (7700) [3]
50	5000K	**LW**	2' (2600), 4' (4200), 8' (8500) [3]
2750T	2700K–5000K SpectraSync™ Tunable White [1]	**ML**	2' (3400), 4' (5300), 8' (9800) [3]
2765T	2700K–6500K SpectraSync™ Tunable White [1]	**HL**	2' (3800), 4' (6000), 8' (11,800) [4]
		VL	2' (4500), 4' (7800), 8' (14,200) [4]

Shielding		Distribution	
FA	Frosted Acrylic	**W**	Wide

ED	U	–		
Driver	**Voltage**		**Options**	**Control Options**

Driver		Voltage	
E	Fixed Output	**U**	120–277V
ED	0-10V Dimming	**347**	347V
ED1	0-10V 1% Dimming		
EDD	0-10V Dim-to-Dark		
ESD	Step Dimming		
LUTH	Hi-lume 1% EcoSystem LED driver with Soft-on, Fade-to-Black dimming technology		
DALIP	DALI Power Bus [5]		

Options	
ELL14	Emergency Battery Pack, 1400 Lumens [6]
GTD	Generator Transfer Device [7]
DTS	Dimming Bypass Module [8]
GLR	Fast Blow Fuse
INT	Intermediate (provides ends with wiring access for continuous row mounting) [9, 10, 11, 12, 13]
EOR	End of Row (provides end wiring access for continuous row mounting) [10, 11, 12, 13]
SAF	SpectraSAFE™ Integrated Surveillance Lighting System [14]
MST	MASTER fixture that controls one or more SATELLITE fixtures in a continuous row application [10, 11, 12, 15, 16, 17, 18]
SAT	SATELLITE fixture controlled by MASTER fixture in a continuous row application [10, 11, 12, 16, 17, 18]

Control Options	
NX Standalone	
NXOS	NX, PIR BT Occupancy/Daylight Sensor, Round Ceiling Mount [19]
Third-Party Control Options	
LVR	Lutron Vive Integral Fixture Control DFCSJ-OEM-RF (RF only) [20, 21, 22]
LVS	Lutron Vive Integral Fixture Control DFCSJ-OEM-OCC (RF with daylight and occupancy sensing) [20, 21, 22]
ODPG	Occupancy and Daylight Sensors w/ Grouping, Philips SNS200 [20, 22]

Accessories (Order Separately)	
RLWWG2	2' Wire Guard
RLWWG4	4' Wire Guard
S18	18" Stem, Canopy
SS18	18" Swivel Stem–45°Swivel
CM24SCF3-KIT	24" Adjustable Cable Mounting Kit, 3-wire feed
CM48SCF3-KIT	48" Adjustable Cable Mounting Kit, 3-wire feed

Notes:

1 Only available with ED driver
2 Nominal Lumens. Refer to performance tables for exact values and available lumen outputs for fixture size
3 RLW4' & RLW8' lumen packages XW - ML qualified up to 40°C
4 RLW4' & RLW8' lumen packages HL & VL qualified up to 35°C
5 DALIP only available when LVS, LVR or ODPG control options are selected
6 For compatibility with Dual-Lite LiteGear® inverters in lieu of installed battery pack, contact Hubbell Lighting representative. Not available with 2'
7 Available for universal voltage and fixed output driver options only
8 For emergency circuit control loads including sensors and wireless systems CSA certified to UL 924. Only available with 0-10V drivers. Universal voltage only. See page 6 for wiring diagram
9 Suspension support required at every fixture coupling; see Mounting Accessories Guide
10 Not available with DTS, GTD or ATSD
11 All fixtures in a row must be the same driver type and voltage
12 Includes quick-connect wiring harness
13 A row-connector kit will be included with each fixture when EOR or INT is selected
14 Not available with Control Options. Not available in 347. Not available with through wiring
15 MST option not available with INT row position
16 Multiple SAT fixtures can be controlled by one MST fixture. Any one SAT fixture can have no more than one connected MST fixture
17 NX is supported for this application, consult Brand for use with other controls systems
18 Not available with LUTH

NX In-Fixture Control Options:

19 Only available with ED and ED1 drivers. Universal voltage only

Third-Party Control Options:

20 LVS, LVR and ODPG only available with DALIP driver option
21 VIVE is a trademark of Lutron Electronics Co., Inc
22 Not available with SpectraSync (2750T or 2765T)

© 2021 Columbia Lighting, a division of Hubbell Lighting, Inc. Specifications subject to change without notice.
701 Millennium Blvd • Greenville, SC 29607 / Tel 864.678.1000 / Website www.columbialighting.com

HUBBELL Lighting

CONTROLS

NX Distributed Intelligence™ Lighting Controls:

Supports both indoor and outdoor applications in a variety of deployment options- wired, wireless, hybrid.
Integrates with and enables a wide array of luminaires including those with SpectraSync Color Tuning Technology.

NX INTEGRATED CONTROLS REFERENCE									
NX Option	Sensor	Networkable	Scheduling	Occupancy	Daylight Harvesting	0–10V Dimming	On/off Control	Bluetooth® App Programming	Commissioning
NX Standalone									
NXOS	NXSMP-OMNI	No	Yes	Yes	Yes	Yes	Yes	Yes	On-site

SpectraSync™ Color Tuning Technology:

Control your space based on the needs of the application, specific activities throughout the day and preferences of the occupants with distinct SpectraSync™ Color Tuning Technologies.

SPECTRASYNC COLOR TUNING TECHNOLOGY		
Mode	Kelvin Range	Description
Tunable White	2700K-5000K 2700K-6500K	Offers users the ability to tailor CCT to their personal preference, enhancing task visibility, material and colors or the aesthetics of the space

SpectraSAFE™ Integrated Surveillance Lighting System

Technical Features

- High resolution 1080p full HD camera
- 2.8mm lens / 140° field of view
- IR emitter for low / no-light conditions
- Multiple wiring configurations available
- Supports 2-way audio communication
- Supports 2.4GHz WPA-PSK/WPA2-PSK Wi-Fi
- Data encrypted using AES 256 standard
- Low power consumption (2-5W)
- Transmissions secured using Open TLS / SSL

Software & Support

- Free Android, iOS and web-based app
- Versatile and supports multiple applications
- Multi-tenant web-based camera application
- Phone and in-app chat technical support
- Scalable cloud services and video storage
- Supported by a 5-year warranty

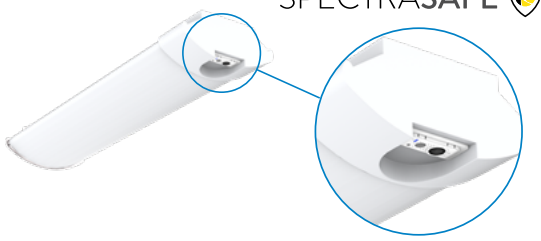

SPECTRASAFE WIRING DIAGRAM

Power Supply Pin Connections	
Pin#	Single
1	VAC in (N)
5	VAC in (L)
7	+Vout
9	-Vout

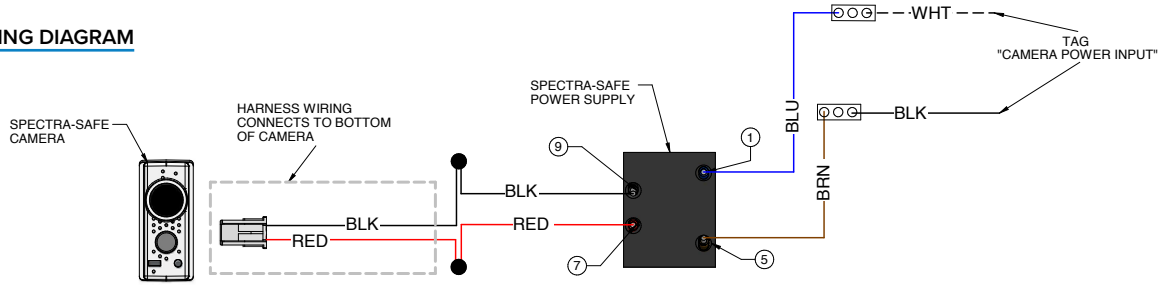

NX Design & Application Guide
NX Brochure
SpectraSync
NX Solutions Guide
SpectraSAFE Brochure

© 2021 Columbia Lighting, a division of Hubbell Lighting, Inc. Specifications subject to change without notice.
701 Millennium Blvd • Greenville, SC 29607 / Tel 864.678.1000 / Website www.columbialighting.com

Columbia LIGHTING

RLW

REVALUME™ LINEAR WRAP

DATE: | LOCATION:

TYPE: T3 | PROJECT:

CATALOG #:

DELIVERED LUMENS

FIXTURE	COLOR	LUMENS	WATTS	LPW
RLW2-VW	3000K	1513	11.6	130
	3500K	1541	11.6	133
	4000K	1559	11.6	134
	5000K	1612	11.6	139
RLW2-MW	3000K	2020	16.3	124
	3500K	2057	16.3	126
	4000K	2082	16.3	128
	5000K	2152	16.3	132
RLW2-LW	3000K	2553	22.1	116
	3500K	2600	22.1	118
	4000K	2631	22.1	119
	5000K	2720	22.1	123
RLW2-ML	3000K	3297	26.6	124
	3500K	3357	26.6	126
	4000K	3397	26.6	128
	5000K	3511	26.6	132
RLW2-HL	3000K	3594	29.5	122
	3500K	3660	29.5	124
	4000K	3704	29.5	126
	5000K	3828	29.5	130
RLW2-VL	3000K	4354	37.2	117
	3500K	4434	37.2	119
	4000K	4487	37.2	121
	5000K	4638	37.2	125
RLW4-XW	3000K	2711	19.5	140
	3500K	2673	19.4	138
	4000K	2705	19.4	139
	5000K	2755	19.4	142
RLW4-VW	3000K	3275	25.2	130
	3500K	3335	25.2	132
	4000K	3375	25.2	134
	5000K	3488	25.2	138
RLW4-MW	3000K	3854	28.8	134
	3500K	3925	28.8	136
	4000K	3972	28.8	138
	5000K	4106	28.8	143
RLW4-LW	3000K	4174	33.9	123
	3500K	4251	33.9	125
	4000K	4302	33.9	127
	5000K	4447	33.9	131
RLW4-ML	3000K	5128	40.4	127
	3500K	5222	40.4	129
	4000K	5285	40.4	131
	5000K	5462	40.4	135

© 2021 Columbia Lighting, a division of Hubbell Lighting, Inc. Specifications subject to change without notice.
701 Millennium Blvd • Greenville, SC 29607 / Tel 864.678.1000 / Website www.columbialighting.com

HUBBELL Lighting

The GNL is a versatile enclosed surface luminaire ideal for walkways, parking structures, common areas or any area vandal resistant luminaires are required

W1

GNL Guardian round enclosed surface

Features and Specifications:

Construction:

- Front trim and back housing are available in 2 standard color choices
- Finish of the guard is molded throughout
- Designed for long-term installations
- Die cast marine grade aluminum housing
- One piece injection molded guard with integral weep hole made from UV-stabilized polycarbonate
- Tamper-proof TORX™ T-15 pin-in-head stainless steel screws and nylon capture washers provided
- Diffuser is one piece 0.125" thick injection molded lens with radial prisms and molded from UV-stabilized polycarbonate in a frost or translucent white option

Listing & Ratings:

- All electrical components are U.L. listed or recognized
- All fixtures are U.L. Certified and Union made in the USA
- Shallow units are ADA compliant

Mounting Options:

- Surface mount on ceiling or wall

Board:

- Universal voltage 120-277V standard
- 0-10V dimming (to 10%) std.

Warranty:

- 5 years - part replacement only (see our terms & conditions page at www.lamarled.com for details)

See page 2 for lumen chart, dimensions & accessories

Ordering Guide / Example **GNLWATWSOG**

GNL		A				
Series	Color		Lens Options	Housing Depth	Faceplate Options	General Options
GNL = Guardian round luminaire	**W** = White **Z** = Bronze	Adjustable CCT and Output 4000K Field adjustable CCT 3000k-5000k Field adjustable output 2100-3200 Lm 13.5W-20.5W	**FR** = Frosted ribbed **TW** = Translucent white	**S** = Shallow **D** = Deep	**CG** = Cross guard **EG** = Eyelid guard **OG** = Open guard	**EM** = Emergency pack >90 min., >500 lumens (Deep housing only - Special order Min. Qty's) **HF** = High frequency occupancy sensor (on/off) **HFAS** = High frequency occupancy sensor adjustable standby 10, 20, 30 or 50%

Consult factory for additional options not shown or listed

Correlated Color Temperatures (CCTs) fall within the nominal range as per ANSI C78.377A

Accessories (order separately)

TORX = Tamper-proof TORX™ T-15 pin-in-head screwdriver

Project Information:

Job Name: _____ Fixture Type: _____

Catalog #: _____ Date: _____

Comments: _____

Certification & Listings:

UL CERTIFIED · 120-277V Universal · CRI 80+ · COLOR SELECT · UNION MADE IN THE USA · RoHS COMPLIANT · 0-10V DIM · 5 YEAR WARRANTY · POWER SELECT

LAMARLED 1150 Motor Pkwy, Central Islip, NY 11722 | tel 631.777.7700 fax 516.333.7695 | www.lamarled.com

GNL Guardian round enclosed surface

BEFORE INSTALLATION, PLEASE CONSULT YOUR LOCAL ORDINANCES AND BUILDING CODES FOR COMPLIANCE

Dimensions & Accessories

Open Guard

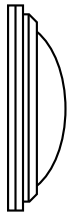

Shallow
3.75” Depth

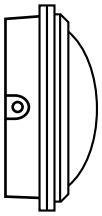

Deep (Special Order)
6.21” Depth

Cross and Eylid Guard

Shallow
4.00” Depth

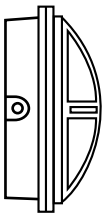

Deep (Special Order)
6.46” Depth

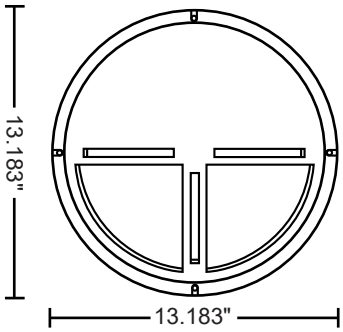

Exterior Finishes

White

Bronze

Lens Options

Frosted Ribbed

Translucent White

Lumen Chart - 4000K

Power	Frosted Ribbed	Translucent White
13.5W	1380Lu	832Lu
17W	1730Lu	1050Lu
20.5W	2182Lu	1241Lu

When used in draft prone areas, fixtures with high frequency sensors should be rigidly mounted
High frequency motion sensors can detect motion through many materials including glass, sheet rock walls, wood doors and the lens of a fixture, enabling the sensor to be hidden from view in most cases - consult factory to see if an HF sensor is the right fit for your application
LAMAR LED assumes no responsibility for misapplication of fixtures
Due to the rapid advancements in LED technology, please consult our website for the most current technical data.

Specifications subject to change without notice - Rev 0721

LAMARLED 1150 Motor Pkwy, Central Islip, NY 11722 | tel 631.777.7700 fax 516.333.7695 | www.lamarled.com

HUBBELL Outdoor Lighting

DATE:	LOCATION:
TYPE: W2	PROJECT:
CATALOG #:	

PERIMALITER®

PGM3/PGL3 LED WALL PACK

FEATURES

- Available in two sizes and four outputs up to 7,100 lumens
- A specially designed polycarbonate lens provides ultimate glare control which "softens" the light for no pixilation and unprecedented visual comfort
- Wireless control, motion sensor and photocontrol
- 10kA surge protection standard
- Dark bronze matte textured powder paint finish is standard, other finishes available

PGM3

PVL3

RELATED PRODUCTS

LNC2 Prismatic WGH NRG®3000

SPECIFICATIONS

CONSTRUCTION

- The die-cast aluminum housing provides firm mounting over recessed junction boxes
- 3 x 1/2" threaded conduit holes (top and sides) for surface conduit wiring or Photocontrol for dusk-to dawn control
- Two door options available: Cast aluminum frame with prismatic borosilicate glass (PGM3), One piece, prismatic, vandal resistant polycarbonate cover (PVL3)
- Standard finish is dark bronze textured powder paint. The PGM3 version is available in alternate finishes of black, white, gray, platinum silver and custom colors

OPTICS

- 180 high powered LEDs in, produce up to 7102 lumens in PGM3 and 6826 lumens in PVL3
- CCT – 3000K, 4000K, 5000K (70 CRI)

ELECTRICAL

- 120-277V universal voltage 50/60Hz, 0–10V dimmable
- Driver RoHS and IP66
- Drivers have greater than .90 power factor and less than 20% Total Harmonic Distortion

ELECTRICAL (CONTINUED)

- 10kA surge protection (parallel); Automatically takes fixture off-line when device is consumed

CONTROLS

- Photocell and occupancy sensor options available for complete on/off or programmable dimming control

CERTIFICATIONS

- Listed to UL1598 for use in wet locations

WARRANTY

- 5 year warranty
- See HLI Standard Warranty for additional information

KEY DATA	
Lumen Range	3516–7102
Wattage Range	27.6–54.4
Efficacy Range (LPW)	120-138
Life (Hours)	>60,000

PGM3/PVL3 PSG PAGE
BROCHURE
INSTALLATION SHEET
DIMENSIONAL DRAWINGS

© 2021 Hubbell Outdoor, a division of Hubbell Lighting, Inc. Specifications subject to change without notice.
701 Millennium Blvd • Greenville, SC 29607 / Tel 864.678.1000 / Website www.hubbelloutdoor.com

HUBBELL Lighting

HUBBELL Outdoor Lighting

DATE: | LOCATION:

TYPE: W2 | PROJECT:

CATALOG #:

PERIMALITER®

PGM3/PVL3 LED WALL PACK

ORDERING GUIDE

Example: PGM3-180L-60-5K7-U-DBT

CATALOG #

Family		LED Engine		CCT/CRI		Voltage[1]		Fixture Color		Options	
PGM3	Glass Refractor	**180L-30**	180L, 30W	**3K7**	3000K, 70 CRI	**U**	120V–277V	**BLT**	Black Matte Textured	**F**	Fusing (voltage determined by voltage field) Single fusing only 120V, 277V, or 347V[1]
PVL3	Polycarbonate Refractor[4]	**180L-60**	180L, 60W	**4K7**	4000K. 70 CRI	**1**	120V	**BLS**	Black Gloss Smooth	**PC**	Button photocontrol, (Must specify individual voltage)[1]
				5K7	5000K, 70 CRi	**2**	208V	**DBT**	Dark Bronze Matte Textured	**SCP**	Programmable motion control, factory default is 10% light output[2,3]
						3	240V	**DBS**	Dark Brone Gloss Smooth	**Sepcify SCP Height**	
						4	277V	**GTT**	Graphite Matte Textured	**8F**	Up to 8ft mount height
						5	480V	**LGS**	Light Grey Gloss Smooth	**20F**	Up to 20ft mount height
						F	347V	**PSS**	Platinum Silver Smooth		
								WHT	White Matte Textured		
								WHS	White Gloss Smooth		
								VGT	Verde Green Textured		
								Color Option			
								CC	Custom Color		

ACCESSORIES AND SERVICES (ORDERED SEPARATELY)

Catalog Number	Description
☐ **PBT-1**	Photo control, button type, 120V
☐ **PBT-234**	Photo control, button type, 208, 240, 277V
☐ **PG-PS**	Polycarbonate shield for refractor for PGM3[5]
☐ **PG-WG**	Wire guard for refractor for PGM3[5]
☐ **PVL3V**	Full cut-off visor, formed aluminum, bronze finish
☐ **SCP-REMOTE**	Remote control for SCP option. Order at least one per project to program control[6]

Notes:

1 Voltage specific option, designate in voltage field, PC not available in 480V

2 0-10V fully adjustable dimming with automatic daylight calibration and different time delay settings, must order minimum of one remote to program dimming settings, 120V or 277V only

3 PC option not applicable, included in sensor

4 PVL3 only available in Bronze and White fixture colors

5 Guard & shield can be used on the same fixture

6 0–10V fully adjustable dimming with automatic daylight calibration and different time delay settings, must order minimum of one remote to program dimming settings not available in 208V, 240V, 347V or 480V

PERFORMANCE DATA

				5K (5000K nominal, 70 CRI)					4K (4000K nominal, 70 CRI)					3K (3000K nominal, 70 CRI)				
LEDS	Nominal Wattage	System Watts	Dist. Type	LUMENS	LPW	B	U	B	LUMENS	LPW	B	U	B	LUMENS	LPW	B	U	B
PGM3-180L	30	28	4	3692	134	0	3	3	3815	138	0	3	3	3659	132	0	3	3
	60	55	4	6872	126	0	4	3	7102	131	0	4	3	6811	125	0	4	3
PVL3-180L	30	28	4	3549	129	0	3	2	3667	133	0	3	2	3516	127	0	3	2
	60	55	4	6606	123	1	4	3	6826	123	1	4	3	6545	120	1	4	3

Lumen values are from photometric tests performed in accordance with IESNA LM-79-08. Data is considered to be representative of the configurations shown. Actual performance may differ as a result of end-user environment and application

© 2021 Hubbell Outdoor, a division of Hubbell Lighting, Inc. Specifications subject to change without notice.
701 Millennium Blvd • Greenville, SC 29607 / Tel 864.678.1000 / Website www.hubbelloutdoor.com

HUBBELL Lighting

HUBBELL Outdoor Lighting

DATE: | LOCATION:

TYPE: W2 | PROJECT:

CATALOG #:

PERIMALITER®

PGM3/PVL3 LED WALL PACK

ELECTRICAL DATA

# OF LEDS	Nominal Wattage (W)	INPUT VOLTAGE (V)	CURRENT (Amps)	SYSTEM POWER (w)
180	30	120	0.23	28
		208	0.13	28
		240	0.12	28
		277	0.10	28
		347	0.08	28
		480	0.06	28
	60	120	0.46	55
		208	0.26	55
		240	0.23	55
		277	0.20	55
		347	0.16	55
		480	0.11	55

PROJECTED LUMEN MAINTENANCE

	OPERATING HOURS				
Ambient Temp.	0	25,000	TM-21-111 60,000	100,000	L70 (hours)
25˚C / 77˚F	1.00	0.97	0.94	0.90	>325,000
40˚C / 104˚F	1.00	0.97	0.90	0.84	>190,000

1. Projected per IESNA TM-21-11 ambient, based on 10,000 hours of LED testing per IESNA LM-80-08

LUMINAIRE AMBIENT TEMPERATURE FACTOR (LATF)

AMBIENT TEMPERATURE		LUMEN MULTIPLIER
0°C	32°F	1.02
10°C	50°F	1.02
20°C	68°F	1.01
25°C	77°F	1.00
30°C	86°F	0.99
40°C	104°F	0.98
50°C	122°F	0.97

Use these factors to determine relative lumen output for average ambient temperatures from 0-40°C (32-104°F)

DIMENSIONS

PGM3

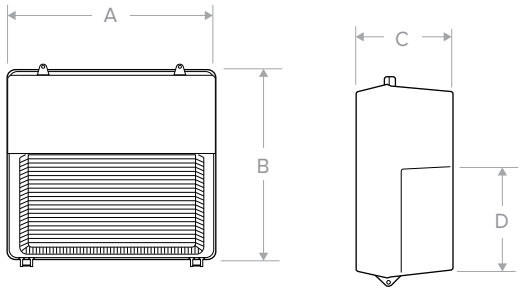

	A	B	C	D
PGM3	14.87"	15"	8"	6.81"
LED	378 mm	381 mm	203 mm	173 m

PVL3

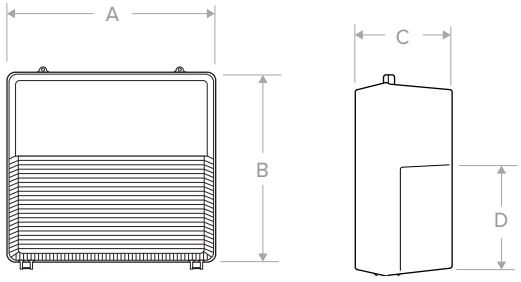

	A	B	C	D
PVL3	14.87"	15"	8"	6.81"
LED	378 mm	381 mm	203 mm	189 m

USE OF TRADEMARKS AND TRADE NAMES

All product and company names, logos and product identifies are trademarks ™ or registered trademarks ® of Hubbell Lighting, Inc. or their respective owners. Use of them does not necessarily imply any affiliation with or endorsement by such respective owners.

© 2021 Hubbell Outdoor, a division of Hubbell Lighting, Inc. Specifications subject to change without notice.
701 Millennium Blvd • Greenville, SC 29607 / Tel 864.678.1000 / Website www.hubbelloutdoor.com

HUBBELL Lighting

COMPASS®

DATE:	LOCATION:
TYPE: X1	PROJECT:
CATALOG #:	

CEL

EDGE-LIT LED EMERGENCY EXIT

X1 - CEILING MOUNT
REFER TO LIGHTING PLANS FOR FACE PLATE AND ARROW DIRECTIONS

tradeSELECT®

Brochure

FEATURES

- AC only or Emergency Models
- Superior panel illumination with Red or Green letters
- LED life-cycle of more than 10 years
- Damp Location Listed 20°C to 30°C (68°F to 86°F)
- Dual-voltage 120 or 277V AC input
- Low Input Power Consumption at 3.72 Watts
- Includes long-life Nickel Cadmium battery for UL recognized 90 minute emergency lighting
- Field installed directional arrow indicators with template
- Mirror divider on single and double-face models
- Provided with test switch and AC-On indicator
- Canopy included for surface mount model

UL924 NFPA 70 NFPA 101

RELATED PRODUCTS

- CU2 - LED Emergency Light
- CU2SQ - LED Emergency Light

SPECIFICATIONS

APPLICATION

- The CEL Series is applied in stairwells, hallways, offices and other commercial applications
- The housing finish and trim-plate is brushed aluminum
- Recessed mount model comes with a full recessed box complete with integrated caddy-bar assembly
- Surface mount model has a clam-shell design for easy installation and access to internal circuitry

CONSTRUCTION

- The acrylic panels are ultrasonically welded and taped at the edges to maximize illumination and visibility

INSTALLATION

- The CEL is ideal for architectural applications and offers surface and recessed mounting options
- The Exit panel can be ratcheted to various angles for mounting to angled surfaces
- Canopy and mounting hardware included

ELECTRICAL

- LED based emergency exit
- Emergency models include NiCad battery, status LED and Push-to-test switch

CERTIFICATIONS

- Listed to UL924 Standard
- UL924 Listed for Damp Location
- NFPA 101 and NFPA 70
- OSHA

WARRANTY

- 2 year full unit warranty
- See HLI Standard Warranty for additional information

ORDERING GUIDE

Catalog Number	Description
CELS1RNE	Edge-Lit Exit, Surface Mount, Single Face, Red Letters, Brushed Aluminum, Battery
CELS1GNE	Edge-Lit Exit, Surface Mount, Single Face, Green Letters, Brushed Aluminum, Battery
CELS2RNE	Edge-Lit Exit, Surface Mount, Double Face, Red Letters, Brushed Aluminum, Battery
CELS2GNE	Edge-Lit Exit, Surface Mount, Double Face, Green Letters, Brushed Aluminum, Battery
CELS1RN	Edge-Lit Exit, Surface Mount, Single Face, Red Letters, Brushed Aluminum, AC only
CELS2RN	Edge-Lit Exit, Surface Mount, Double Face, Red Letters, Brushed Aluminum, AC only
CELS1GN	Edge-Lit Exit, Surface Mount, Single Face, Green Letters, Brushed Aluminum, AC only
CELS2GN	Edge-Lit Exit, Surface Mount, Double Face, Green Letters, Brushed Aluminum, AC only
CELR1RNE	Edge-Lit Exit, Recessed Mount, Single Face, Red Letters, Brushed Aluminum, Battery
CELR1GNE	Edge-Lit Exit, Recessed Mount, Single Face, Green Letters, Brushed Aluminum, Battery
CELR2RNE	Edge-Lit Exit, Recessed Mount, Double Face, Red Letters, Brushed Aluminum, Battery
CELR2GNE	Edge-Lit Exit, Recessed Mount, Double Face, Green Letters, Brushed Aluminum, Battery
CELR1RN	Edge-Lit Exit, Recessed Mount, Single Face, Red Letters, Brushed Aluminum, AC only
CELR2RN	Edge-Lit Exit, Recessed Mount, Double Face, Red Letters, Brushed Aluminum, AC only
CELR1GN	Edge-Lit Exit, Recessed Mount, Single Face, Green Letters, Brushed Aluminum, AC only
CELR2GN	Edge-Lit Exit, Recessed Mount, Double Face, Green Letters, Brushed Aluminum, AC only

© 2021 Compass, a division of Hubbell Lighting, Inc. Specifications subject to change without notice.
701 Millennium Blvd • Greenville, SC 29607 / Tech Support: (864)-678-1000 / Website www.compasslightingproducts.com

HUBBELL Lighting

COMPASS®

CEL

EDGE-LIT LED EMERGENCY EXIT

DATE:	LOCATION:
TYPE: X1	PROJECT:
CATALOG #:	

DIMENSIONS

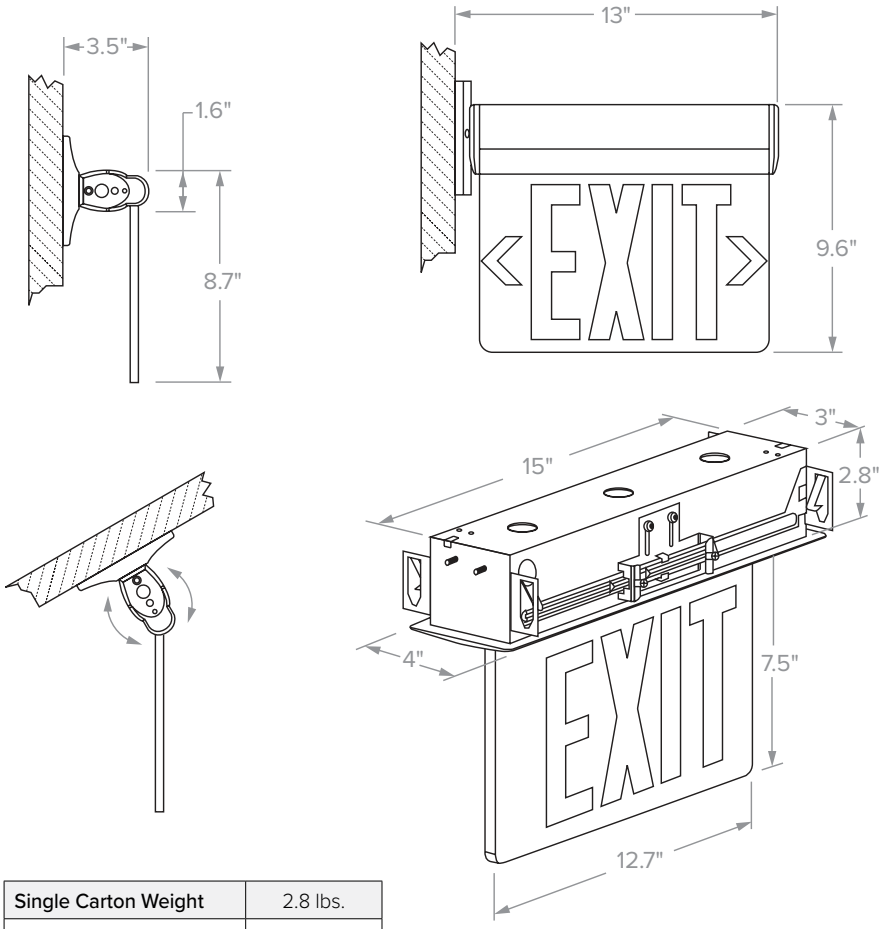

Single Carton Weight	2.8 lbs.
Master Carton Quantity	8 each

INPUT POWER REQUIREMENTS

Catalog Number	Input Power Consumption
CELSIRNE	3.14W
CELS2RNE	
CELRIRNE	
CELR2RNE	
CELRIRN	2.38W
CELR2RN	
CELSIRN	
CELS2RN	
CELSIGNE	2.94W
CELS2GNE	
CELRIGNE	
CELR2GNE	
CELRIGN	2.39W
CELR2GN	
CELSIGN	
CELS2GN	

© 2021 Compass, a division of Hubbell Lighting, Inc. Specifications subject to change without notice.
701 Millennium Blvd • Greenville, SC 29607 / Tech Support: (864)-678-1000 / Website www.compasslightingproducts.com

HUBBELL Lighting

COMPASS®

DATE:	LOCATION:
TYPE: X2	PROJECT:
CATALOG #:	

CEL

EDGE-LIT LED EMERGENCY EXIT

X1 - PENDANT
REFER TO LIGHTING PLANS FOR
FACE PLATE AND ARROW
DIRECTIONS

tradeSELECT®

FEATURES

- AC only or Emergency Models
- Superior panel illumination with Red or Green letters
- LED life-cycle of more than 10 years
- Damp Location Listed 20°C to 30°C (68°F to 86°F)
- Dual-voltage 120 or 277V AC input
- Low Input Power Consumption at 3.72 Watts
- Includes long-life Nickel Cadmium battery for UL recognized 90 minute emergency lighting
- Field installed directional arrow indicators with template
- Mirror divider on single and double-face models
- Provided with test switch and AC-On indicator
- Canopy included for surface mount model

UL924 NFPA 70 NFPA 101

RELATED PRODUCTS

- CU2 - LED Emergency Light
- CU2SQ - LED Emergency Light

SPECIFICATIONS

APPLICATION

- The CEL Series is applied in stairwells, hallways, offices and other commercial applications
- The housing finish and trim-plate is brushed aluminum
- Recessed mount model comes with a full recessed box complete with integrated caddy-bar assembly
- Surface mount model has a clam-shell design for easy installation and access to internal circuitry

CONSTRUCTION

- The acrylic panels are ultrasonically welded and taped at the edges to maximize illumination and visibility

INSTALLATION

- The CEL is ideal for architectural applications and offers surface and recessed mounting options
- The Exit panel can be ratcheted to various angles for mounting to angled surfaces
- Canopy and mounting hardware included

ELECTRICAL

- LED based emergency exit
- Emergency models include NiCad battery, status LED and Push-to-test switch

CERTIFICATIONS

- Listed to UL924 Standard
- UL924 Listed for Damp Location
- NFPA 101 and NFPA 70
- OSHA

WARRANTY

- 2 year full unit warranty
- See HLI Standard Warranty for additional information

ORDERING GUIDE

Catalog Number	Description
CELS1RNE	Edge-Lit Exit, Surface Mount, Single Face, Red Letters, Brushed Aluminum, Battery
CELS1GNE	Edge-Lit Exit, Surface Mount, Single Face, Green Letters, Brushed Aluminum, Battery
CELS2RNE	Edge-Lit Exit, Surface Mount, Double Face, Red Letters, Brushed Aluminum, Battery
CELS2GNE	Edge-Lit Exit, Surface Mount, Double Face, Green Letters, Brushed Aluminum, Battery
CELS1RN	Edge-Lit Exit, Surface Mount, Single Face, Red Letters, Brushed Aluminum, AC only
CELS2RN	Edge-Lit Exit, Surface Mount, Double Face, Red Letters, Brushed Aluminum, AC only
CELS1GN	Edge-Lit Exit, Surface Mount, Single Face, Green Letters, Brushed Aluminum, AC only
CELS2GN	Edge-Lit Exit, Surface Mount, Double Face, Green Letters, Brushed Aluminum, AC only
CELR1RNE	Edge-Lit Exit, Recessed Mount, Single Face, Red Letters, Brushed Aluminum, Battery
CELR1GNE	Edge-Lit Exit, Recessed Mount, Single Face, Green Letters, Brushed Aluminum, Battery
CELR2RNE	Edge-Lit Exit, Recessed Mount, Double Face, Red Letters, Brushed Aluminum, Battery
CELR2GNE	Edge-Lit Exit, Recessed Mount, Double Face, Green Letters, Brushed Aluminum, Battery
CELR1RN	Edge-Lit Exit, Recessed Mount, Single Face, Red Letters, Brushed Aluminum, AC only
CELR2RN	Edge-Lit Exit, Recessed Mount, Double Face, Red Letters, Brushed Aluminum, AC only
CELR1GN	Edge-Lit Exit, Recessed Mount, Single Face, Green Letters, Brushed Aluminum, AC only
CELR2GN	Edge-Lit Exit, Recessed Mount, Double Face, Green Letters, Brushed Aluminum, AC only

© 2021 Compass, a division of Hubbell Lighting, Inc. Specifications subject to change without notice.
701 Millennium Blvd • Greenville, SC 29607 / Tech Support: (864)-678-1000 / Website www.compasslightingproducts.com

HUBBELL Lighting

COMPASS®

CEL

EDGE-LIT LED EMERGENCY EXIT

DATE:	LOCATION:
TYPE: X2	PROJECT:
CATALOG #:	

DIMENSIONS

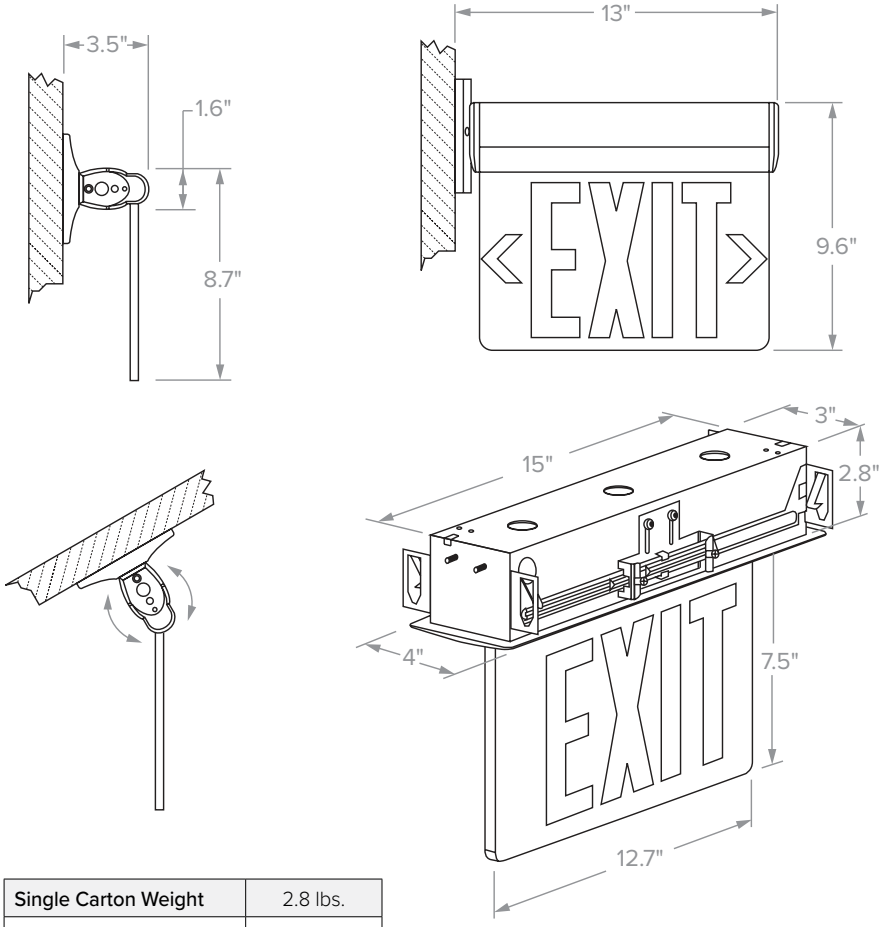

Single Carton Weight	2.8 lbs.
Master Carton Quantity	8 each

INPUT POWER REQUIREMENTS

Catalog Number	Input Power Consumption
CELSIRNE	3.14W
CELS2RNE	
CELRIRNE	
CELR2RNE	
CELRIRN	2.38W
CELR2RN	
CELSIRN	
CELS2RN	
CELSIGNE	2.94W
CELS2GNE	
CELRIGNE	
CELR2GNE	
CELRIGN	2.39W
CELR2GN	
CELSIGN	
CELS2GN	

© 2021 Compass, a division of Hubbell Lighting, Inc. Specifications subject to change without notice.

701 Millennium Blvd • Greenville, SC 29607 / Tech Support: (864)-678-1000 / Website www.compasslightingproducts.com

HUBBELL Lighting

COMPASS®

DATE:	LOCATION:
TYPE:	PROJECT:
CATALOG #:	

CCE

THIN DIE CAST LED EMERGENCY EXIT

X3 - WALL MOUNT
DOUBLE-FACE

tradeSELECT®

Brochure

FEATURES

- LED life-cycle of more than 10 years
- Molded-in template for Quick installation
- Dual-voltage 120 or 277V AC input
- Emergency models include long-life 2.4VDC Nickel Cadmium battery for UL recognized 90 minute operation
- Damp Location Listed(0° to 50°C)
- Provided with test switch and AC-On indicator
- Canopy Included
- 24hr. Re-charge

UL924 NFPA 70 NFPA 101

RELATED PRODUCTS

CU2 - LED Emergency Light

CU2SQ - LED Emergency Light

SPECIFICATIONS

APPLICATION

- The CCE Series can be applied in stair-wells, hallways, offices and other commercial applications.

CONSTRUCTION

- The CCE Series offers quality and value with a compact and attractive Thin Die-Cast aluminum Exit sign
- The Exit face-plate is brushed aluminum with black edges and 6" letters with a red or green diffuser
- Test switch and AC-on indicator located at bottom center
- Directional indication made by knock-out chevrons

INSTALLATION

- Single-face models can be wall, end or ceiling mounted
- Double-face models are end or ceiling mounted only
- Includes canopy and universal mounting plate

ELECTRICAL

- Available with battery for emergency operation or AC only

CERTIFICATIONS

- UL924 Listed for Damp Location
- NFPA 101 and NFPA 70
- OSHA

WARRANTY

- 2 year full unit warranty
- See HLI Standard Warranty for additional information

ORDERING GUIDE

Catalog Number	Description
CCESRE	Brushed Face, Black Housing, Single-Face, Red, Emergency
CCEDRE	Brushed Face, Black Housing, Double-Face, Red, Emergency
CCESGE	Brushed Face, Black Housing, Single-Face, Green, Emergency
CCEDGE	Brushed Face, Black Housing, Double-Face, Green, Emergency
CCESR	Brushed Face, Black Housing, Single-Face, Red, AC
CCEDR	Brushed Face, Black Housing, Double-Face, Red, AC
CCESG	Brushed Face, Black Housing, Single-Face, Green, AC
CCEDG	Brushed Face, Black Housing, Double-Face, Green, AC

DIMENSIONS

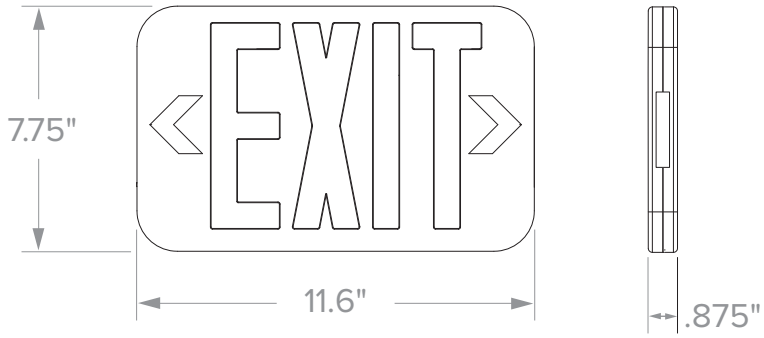

Single Carton Weight	2.8 lbs.
Master Carton Quantity	8 each

INPUT POWER REQUIREMENTS

	Input Watts (W)	
	120V	277V
CCE	1W	1W

© 2020 Compass, a division of Hubbell Lighting, Inc. Specifications subject to change without notice.
701 Millennium Blvd • Greenville, SC 29607 / Tel (864)-678-1000 / Website www.compasslightingproducts.com

HUBBELL Lighting

COMPASS®

DATE:	LOCATION:
TYPE:	PROJECT:
CATALOG #:	

CEW

WET LOCATION LED EXIT SIGN

X4 - WALL MOUNT EXTERIOR, SINGLE FACE, NO ARROWS, RED EMERGENCY

tradeSELECT®

Brochure

FEATURES

- LED life-cycle of more than 10 years
- Dual-voltage 120 or 277V AC input
- Emergency models include long-life 4.8VDC Nickel Cadmium battery for UL recognized 90 minute operation
- Wet Location Listed(-20°C to 50°C)
- Provided with test switch and AC-On indicator
- Canopy Included
- 24hr. Re-charge

RELATED PRODUCTS

- CSWEU2LED - Wet Location Emergency Light
- CWC - Combination Wet Location Exit/ Emergency Light

UL924 NFPA 70 NFPA 101 CEC T20 COMPLIANT

SPECIFICATIONS

APPLICATION

- The CEW Series can be applied in areas that are susceptible to rain or wet conditions like pool areas or water treatment facilities
- The CEW Series offers quality and value with a wet location rated emergency Exit sign

CONSTRUCTION

- Housing and face-plate made from impact resistant UV stabilized polycarbonate
- Housing is corrosion resistant and face-plate is fully gasketed
- The Exit letters measure 6” with a red or green diffuser
- Directional indication made by place-able chevrons
- Conduit entry KO’s located in top and side housing, with conduit fitting included

INSTALLATION

- Single-face models can be wall mounted by use of molded-in template, end or ceiling mounted
- Double-face models are end or ceiling mounted only
- Includes canopy and universal mounting plate

ELECTRICAL

- Exit face illumination by low energy, long-life red or green ultra bright LED’s
- Water-proof test switch and AC-on indicator located at Exit bottom

CERTIFICATIONS

- UL924 Listed for Wet Location
- NFPA 101 and NFPA 70
- OSHA
- CEC T20 Compliant

WARRANTY

- 2 year full unit warranty
- See HLI Standard Warranty for additional information

ORDERING GUIDE

Catalog Number	Description
CEWSRE	Wet Location, Single-Face, Red, Emergency
CEWDRE	Wet Location, Double-Face, Red, Emergency
CEWSGE	Wet Location, Single-Face, Green, Emergency
CEWDGE	Wet Location, Double-Face, Green, Emergency

© 2020 Compass, a division of Hubbell Lighting, Inc. Specifications subject to change without notice.
701 Millennium Blvd • Greenville, SC 29607 / Tel (864)-678-1000 / Website www.compasslightingproducts.com

HUBBELL Lighting

DATE:	LOCATION:
TYPE:	PROJECT:
CATALOG #:	

CEW

WET LOCATION LED EXIT SIGN

DIMENSIONS

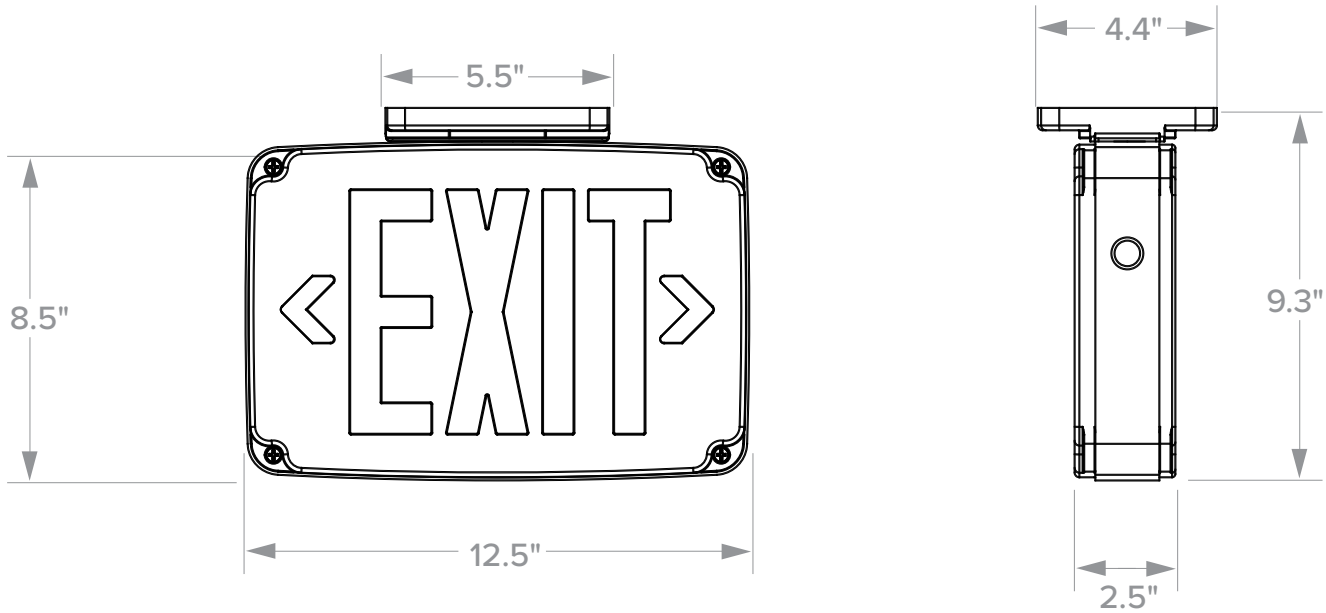

Single Carton Weight	4.3 lbs.
Master Carton Quantity	6 each

INPUT POWER REQUIREMENTS

	Input Watts (W)	
	120 VAC	277 VAC
CEW	2.7W	2.7W

© 2020 Compass, a division of Hubbell Lighting, Inc. Specifications subject to change without notice.
701 Millennium Blvd • Greenville, SC 29607 / Tel (864)-678-1000 / Website www.compasslightingproducts.com

THIS PAGE LEFT INTENTIONALLY BLANK

3691099i 1 05.11.20

T-Series LED Driver

T-Series LED Drivers provide a high-performance tunable white solution.

Features

- UL® 8750 Listed Class P
- Each output capable of 100% to 0.1% dimming*
- For best tunable white performance, operate at 1% or higher. See page 10 for more details
- Dimming Method:
  - Constant-current reduction (CCR) dimming to 200 mA
  - Pulse-width modulation (PWM) dimming below 200 mA
    - PWM Frequency = 3.6 kHz
    - Outputs of the two channels are synchronized
- Driver consumes two digital addresses: one for intensity and one for color temperature
- Guaranteed performance and compatibility when used with Lutron T-Series controls:
  - T-Series Energi Savr Node unit as part of a Quantum system
- Guaranteed compatibility with T-Series Energi Savr Node as a part of a Quantum system
- QwikFig Air compatible
- Protected from miswires of input power to T-Series control inputs up to 277 V~
- Rated lifetime of 50,000 hours at 167 °F (75 °C) calibration point (t_c) for W case and 158 °F (70 °C) calibration point (t_c) for Y case
- FCC Part 15 Class A
- 100% performance tested at factory before shipping.
- RoHS compliant
- For more information please visit: www.lutron.com

Case Type W

1.18 in (30 mm) W x 0.83 in (21.0 mm) H x 16.06 in (408 mm) L

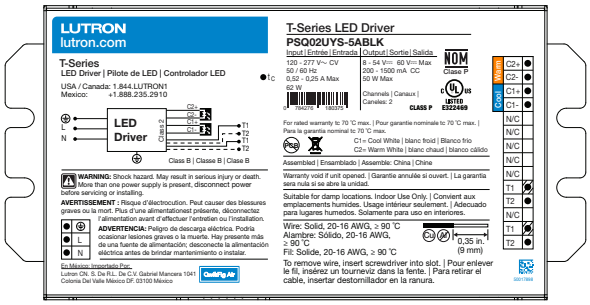

Case Type YS

3.0 in (76.0 mm) W x 1.14 in (29.0 mm) H x 5.91 in (150.0 mm) L

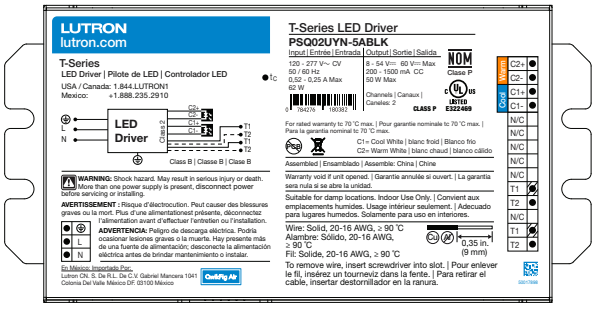

Case Type YN

3.0 in (76.0 mm) W x 1.14 in (29.0 mm) H x 5.91 in (150.0 mm) L

T-Series Digital Link Features

- Simpler to wire and more reliable than 0–10 V⎓
- Guarantees compatibility between Lutron controls and LED drivers
- Accommodates zone and control changes without rewiring
- Connect to Quantum Total Light Management Systems to monitor lighting power consumption
- Polarity-free and topology-free
- Allows easy code compliance
- T-Series digital link can be Class 1 or Class 2
- Non-volatile memory restores all settings after power failure

* Light output at low-end depends on the efficacy of the LED light engine used with the driver.

Specifications

Regulatory Approvals and Compliance

- cULus Listed Class P
- NOM certified
- Lutron Quality Systems registered to ISO 9001.2015
- Inrush current less than NEMA 410-2011 limit
- FCC Part 15 Class A
- Meets UL® 8750, "Light Emitting Diode (LED) Equipment For Use in Lighting Products"
- Class 2 outputs
- Compliant with perfomance criteria for ENERGY STAR for Luminaires Version 2.1 in designated areas (see Load Compatibility graph in Output Ranges page 6)
- Compliant with DLC version 4.3 in designated areas (see **Load Compatibility** graph in Output Ranges page 6) (for W case only)

Performance

- Dimming Range: 100% to 0.1% [1]
- Operating Voltage: 120 V∼/277 V∼ at 50/60 Hz
- Lifetime: 50,000 hours when calibration point (t_c) at 167 °F (75 °C) for W case and 158 °F (70 °C) for Y case [2]
- UL® allows operation of t_c up to 90 °C
- For rated warranty, t_c not to exceed 167 °F (75 °C) for W case and 158 °F (70 °C) for Y case (maximum rated temperature) [2]
- At turn on, lighting goes to the desired level without decreasing or flashing to full brightness
- Typical standby power consumption: < 0.5 W at 120 V∼/277 V∼
- Open-circuit protected output
- Short-circuit protected output
- Over temperature protected

Environmental

- Sound rated: Class A inaudible in 24 dBA ambient
- Relative Humidity: maximum 90% non-condensing
- Minimum Operating Ambient Temperature: t_a = 0 °C (32 °F)[3]
- Indoor use only
- Rated for dry and damp locations

OEM Notes

- For best dimming performance, Lutron recommends electrical insulation with 50/60 Hz impedance of at least 12 MΩ and minimum breakdown voltage of at least 1500 V∼ between LEDs and fixture chassis

Driver Wiring and Mounting

- Driver is grounded by a mounting screw to the grounded fixture or by a terminal connection.
- It is possible to daisy-chain the T-Series digital link using the second set of terminal blocks. See example on page 10
- Fixture must be grounded in accordance with local and national electrical codes
- The positive terminals of both output channels are electrically connected inside the driver. This supports the use of common anode loads
- Terminal blocks on the driver accept one solid wire per terminal from 20 AWG to 16 AWG (0.5 mm² to 1.5 mm²)
- Maximum driver-to-LED light engine wire length for:

Wire Gauge	Maximum Lead Length		
	150 mA to 700 mA	710 mA to 1.50 A	1.51 A to 2.10 A
18 AWG (0.75 mm²)	30 ft (9 m)	15 ft (4.5 m)	10 ft (3 m)
16 AWG (1.5 mm²)	35 ft (10.5 m)	25 ft (7.5 m)	15 ft (4.5 m)
14 AWG (2.5 mm²)[4]	50 ft (15 m)	40 ft (12 m)	25 ft (7.5 m)
12 AWG (4.0 mm²)[4]	100 ft (30 m)	60 ft (18 m)	40 ft (12 m)

[1] For best tunable white performance, operate at 1% or higher. Light output at low-end depends on the efficacy of the LED light engine used with the driver.
[2] To maintain warranty, installer is responsible for ensuring that the driver calibration point does not exceed 167 ºF (75 ºC) for W case and 158 ºF (70 ºC) for Y case.
[3] Where t_a is the temperature of the air directly surrounding the driver.
[4] Terminal blocks on the drivers accept only solid 20 AWG to 16 AWG (0.5 mm² to 1.5 mm²) wire. To use wire gauges larger than the terminal blocks' rated gauge of 16 AWG (1.5 mm²), connect up to 3 ft (1.0 m) of 20 AWG to 16 AWG (0.5 mm² to 1.5 mm²) wire to the LED driver terminal blocks, then connect 12 AWG or 14 AWG (4.0 or 2.5 mm²) up to the length allowed in the above table.

Wiring Diagram

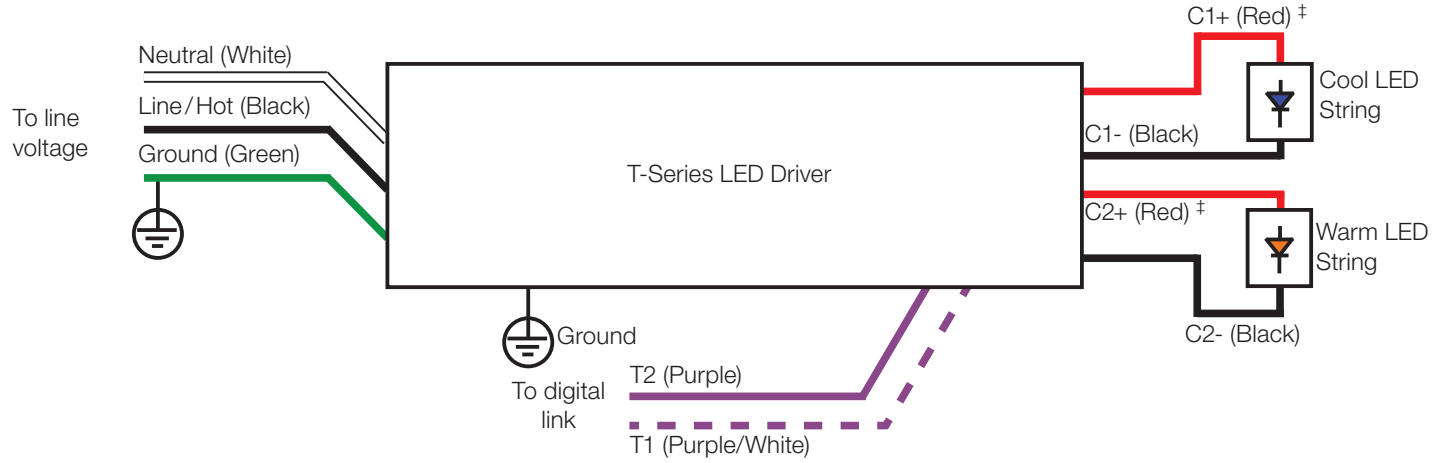

‡ C1+ and C2+ are electrically connected inside the driver. This supports the use of common anode loads.

Tunable White Considerations

- The driver will consume two digital addresses:
  - Address N controls intensity*
  - Address N+1 controls color temperature*
- The highest kelvin light source must be connected to channel 1 (cool white).
- The lowest kelvin light source must be connected to channel 2 (warm white).
- The driver can accept LED light sources with a physical CCT value between 1500 K and 6500 K.
- The driver default minimum intensity level is set to 1%. See **Tunable White Capability** figure to the right for more information.
- Operation below 1% may be acceptable in some applications. The minimum level can be adjusted below 1% through the Quantum software. See the **Tunable White Capability** figure to the right for understanding the general trade off of dimming range versus color temperature range.
- For optimal tunable white performance, it is recommended to set high-end and low-end logical trims which reduce the overall CCT range to less than the maximum capability of the light source.

Tunable White Capability

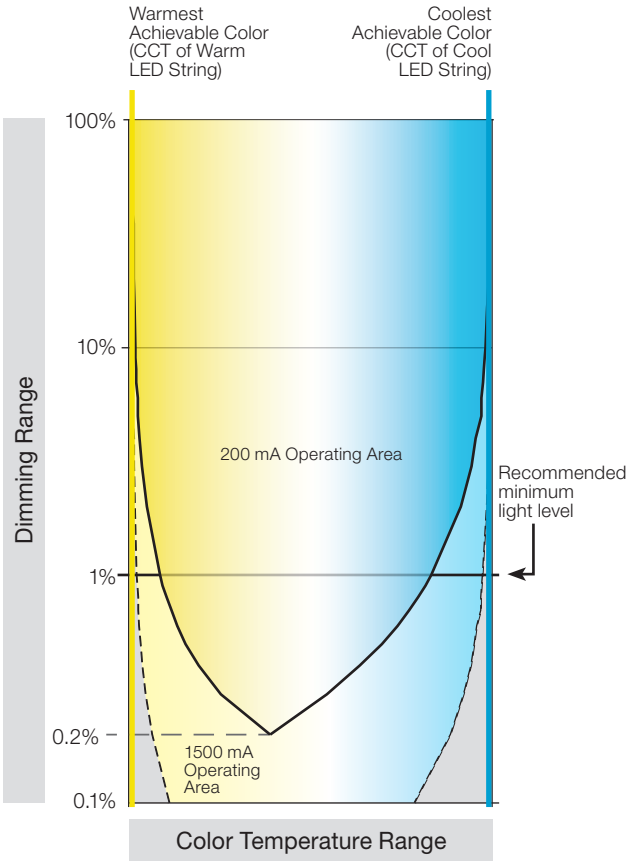

* This is the default behavior. During commissioning, the system may change the addresses to be non-consecutive.

Job Name:	Model Numbers:	
Job Number:		

Compatible Controls: Lutron T-Series Digital Controls

Guaranteed performance specifications with the controls listed in the chart below.

For assistance selecting controls, contact our LED Center of Excellence at **1.877.346.5338** or **LEDs@lutron.com**

Lutron T-Series Compatible Controls	Part Number				
	120 V~	277 V~	T-Series Loops per Control	T-Series Drivers per Loop	Total T-Series Drivers per Control
T-Series Energi Savr Node*	QSN-TW		2	32**	64

* Must be used as part of a Quantum system version 3.4 or higher.

** Each T-Series loop is capable of having 64 addresses. Each driver consumes two addresses.

T-Series Wiring

T-Series Digital Link Overview

- The T-Series digital link wiring (T1 and T2) connects the digital ballasts and drivers together to form a lighting control system.
- T1 and T2 (T-Series digital link wires) are polarity-insensitive and can be wired in any topology (e.g., T-tap and daisy-chain).
- Power is supplied to the T-Series digital link from the control system.

T-Series Digital Link Wiring

- Make sure that the supply breaker to the drivers and T-Series digital link supply is OFF when wiring.
- Connect the two conductors to the two driver terminals T1 and T2 as shown.
- Using two different colors for T1 and T2 will reduce confusion when wiring several drivers together.
- There are two sets of T-Series digital link terminal blocks to support daisy chaining the link.
- The T-Series digital link may be wired Class 1 or Class 2. Consult applicable electrical codes for proper wiring practices. Please refer to Lutron Application Note #142 (048162) at www.lutron.com for more information.
- For emergency lighting wiring, please refer to Lutron Application Note #106 (048106) at www.lutron.com

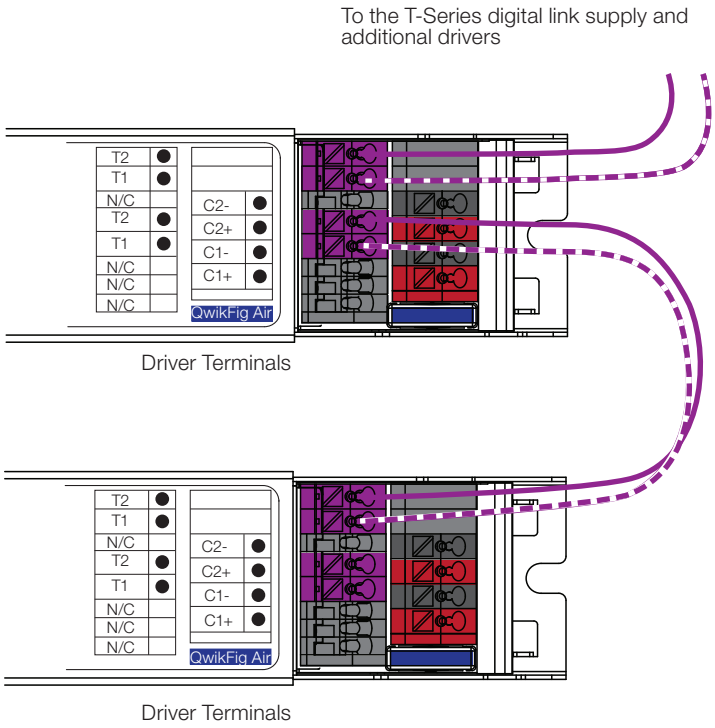

Notes

- The T-Series digital link supply does not have to be located at the end of the digital link.
- The **Maximum Wire Length** table below gives the limits for each of the wires in the T-Series digital link pair.
- The T-Series digital link length is limited by the wire gauge used for T1 and T2 as follows:

Wire Gauge	Maximum Wire Length
12 AWG	1000 ft *
14 AWG	1000 ft *
16 AWG	900 ft
18 AWG	550 ft

Wire Size	Maximum Wire Length
4.0 mm^2	300 m *
2.5 mm^2	300 m *
1.5 mm^2	300 m *
1.0 mm^2	207 m
0.75 mm^2	155 m

* Do not exceed cable lengths of 1000 ft (300 m).

Service

Warranty

For warranty information, please visit www.lutron.com/driverwarranty

Replacement Parts

When ordering Lutron replacement parts, please provide the full model number. Consult Lutron if you have any questions.

Further Information

For further information, please visit us at www.lutron.com or contact our LED Control Center of Excellence at 1.877.346.5338 or LEDs@lutron.com

Lutron, Lutron, Energi Savr Node, Quantum, QwikFig, and QwikFig Air are trademarks or registered trademarks of Lutron Electronics Co., Inc. registered in the U.S. and other countries.

All product names, logos, and brands are property of their respective owners.

Job Name:	Model Numbers:	
Job Number:		

LUT-ALCR-D

Emergency Power Control
For 4-Wire Dimmable Loads

Project:

Model No.:

Comments:

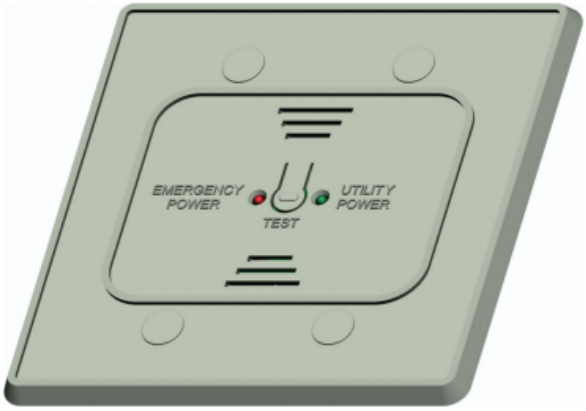

MOUNTING

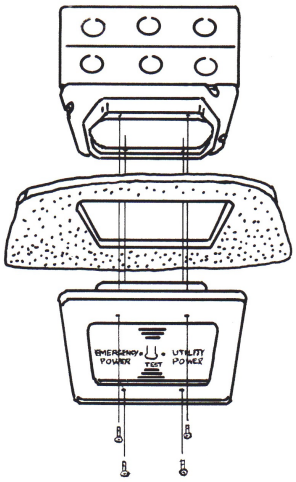

LED COMPATIBLE

UL924 LISTED

WARRANTY

0-10 V Dimmer Compatible

APPLICATION

In the past, emergency lights were kept on 24 hours a day to meet life safety codes. Now, you can use a UL 924 listed Emergency Power Control, Model LUT-ALCR-D, to convert normal light fixtures into approved emergency lights. The LUT-ALCR-D saves energy and money while ensuring compliance with both life safety and energy codes.

During normal operation, the same dimmer, occupancy sensor, dimming panel, or lighting control can switch and dim normal and emergency fixtures on and off simultaneously.

During a utility power interruption, the LUT-ALCR-D automatically bypasses the normal lighting controls, turning the emergency lights ON at full brightness, regardless of dimmer position.

The LUT-ALCR-D is ceiling or wall mounted in a junction box with a single gang plaster ring and is usually located in the area where the emergency fixtures are installed.

FEATURES

- Isolated 0-10V relay contact ensures full brightness during utility power interruption, regardless of dimmer model.
- Unique, Patented Automatic Diagnostic
  When the room switch is turned off, the LUT-ALCR-D will run a 2.5 self-test routine, verifying that the emergency power source was available and that the LUT-ALCR-D , ballast, and lamp(s) are all functioning correctly. This feature eliminates the need for time-consuming and costly manual monthly testing and is approved for this purpose. This also allows the unit to be installed in remote or inaccessible locations, because the unit does not rely on access to its manual test switch.
- Fire Alarm, Remote Test & 0-10V Dimming Option
- Utility & Emergency Power Indicator LED's
- Slim, attractive flush mount profile allows easy access to manual test switch and LED's.

LVS, Inc. 2555 Nicholson Street, San Leandro, CA 94577-4216
Phone: 510-352-9600 1-800-982-4587 Fax: 510-352-6707
www.lvscontrols.com

Athena Light Management Hub (QP5)

The Athena Light Management Hub (QP5) connects Lutron QS devices to your Athena lighting and shading control system.

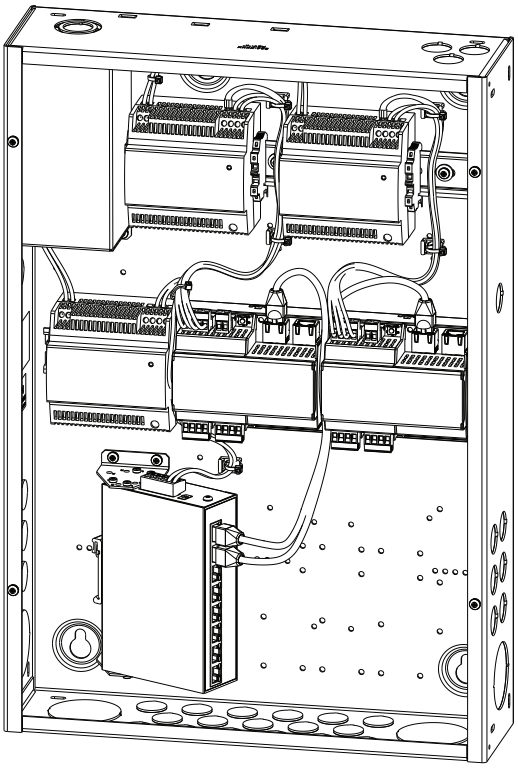

QP5-4L-POE shown

Features

- Designed to control, manage, and monitor Lutron Energi Savr Node units, QS and Pico wallstations, Contract Roller QS shades and QS drapery systems.
- The Athena system brings switching, dimming, motorized window shades, digital ballasts, digital LED drivers, and smart sensors together under one software tool.
- QS link wiring can be T-tapped or daisy-chained.

QP5 Hub Capabilities

- Supports up to two Athena Edge processors with up to two links each that can be individually configured to communicate with:
  – Lutron QS devices
- Includes 8-port Ethernet unmanaged PoE switch to easily connect processors and power a Lutron Athena Clear Connect Gateway–Type X.
- Q-POE-PNL can be used to connect a Lutron Athena Clear Connect Gateway–Type X to the processor hub when the wiring distance exceeds 328 ft (100 m).
- Supports both astronomic and time-of-day events to automatically control the lights and shades/draperies in the system.

Athena Hubs Available:

QP5-1L-POE – 1 Link Athena hub*
QP5-2L-POE – 2 Link Athena hub
QP5-4L-POE – 4 Link Athena hub

Athena Hub Accessory:

Q-POE-PNL – Ethernet range extender, no configurable link. Does not include an Athena Edge processor or respective software features and functionality.

* 1L hub link capability differs from 2L and 4L hubs. See Specifications page.

** Pico wireless controls, QS keypads, IR

Configurable Link/Switchleg Capabilities

	Limitations per Processor		
Model	Number of Processors per Panel	Number of QS Links	Number of Ethernet Ports
QP-5-1L-POE	(1) 1-link	1	2
QP-5-2L-POE	(1) 2-link	2	2
QP-5-4L-POE	(2) 2-link	4	2

	Limitations per QS Link					
Model	QS Device Count	Wall Controls**	Occupancy Sensor Count	Daylight Sensor Count	Switchleg Count	DMX Interface Limit
QP-5-1L-POE	25	50	50	50	256	8
QP-5-2L-POE	99	100	100	100	512	16
QP-5-4L-POE	99	100	100	100	512	16

Job Name:	Model Numbers:	
Job Number:		

Specifications

Regulatory Approvals

- cULus® Listed (Reference: UL® File E42071)
- CE
- Complies with requirements for use in other spaces used for environmental air (plenums) per NEC® 2014 300.22(C)(3)
- Meets the Canadian National Building Code plenum requirements for a concealed space used as a plenum within a floor or roof assembly

Power

- Input voltage: 100–277 V∼ 50/60 Hz, normal feed*
- Input Current:
  - QP5-1L-POE/QP5-2L-POE:
    - 2.4 A (100 V∼)
    - 2 A (120 V∼)
    - 1.4 A (230 V∼)
    - 1 A (277 V∼)
  - QP5-4L-POE:
    - 3.6 A (100 V∼)
    - 3 A (120 V∼)
    - 2.1 A (230 V∼)
    - 1.5 A (277 V∼)
  - Q-POE-PNL:
    - 1.2 A (100 V∼)
    - 1 A (120 V∼)
    - 0.7 A (230 V∼)
    - 0.5 A (277 V∼)
- Output: Edge Processor: 24 V⎓ 1 A per link
  Ethernet PoE Switch: 60 W total,
  30 W max per port
- Power Dissipation (max):
  - QP5-1L-POE/QP5-2L-POE: 85 BTUs/hr
  - QP5-4L-POE: 125 BTUs/hr
  - Q-POE-PNL: 45 BTUs/hr

* If the QP5 panel's PoE switch is powering a Q-RF that is controlling one or more designated Ketra emergency fixtures, power for the QP5 must be supplied via normal-only feed and not using an uninterruptible power supply or generator.

Physical Design

- Enclosure: NEMA Type 1, IP-20 protection
  16 U.S. gauge steel
- Enclosure: W: 14.39 in (365 mm)
  H: 21.00 in (533 mm)
  D: 4.09 in (104 mm)
- Enclosure with Cover: W: 15.39 in (291 mm)
  H: 21.50 in (546 mm)
  D: 4.14 in (105 mm)
- Weight: 25 lb (11.3 kg) (without packaging)

Mounting

- Surface-mount only

Environment

- For indoor use only
- 32 °F to 104 °F (0 °C to 40 °C)
- Relative humidity less than 90% non-condensing

Ethernet Port Connections

- Each hub comes with an 8-port unmanaged PoE switch.
- Ports on the switch must only be used for:
  - Processors (inside the hub)
  - Athena Clear Connect Gateway-Type X
  - Connections to other hubs (QP5 or QP6)
  - Connections to network
  - Do not use unused ports to connect any other Ethernet connections or PoE equipment other then specified above

  Example: QP5-4L-POE has:
  8 total ports
  – 2 (1 port used per processor)
  6 available to connect to other devices

Internet Connection

- Providing the Athena hub with an internet connection is highly recommended. This connection is outbound from the Athena processor to the cloud (see the Athena IT Guide at www.lutron.com/AthenaITGuide for details). Having this connection provides for automated firmware updates as well as remote access, diagnostics, and service (some features may only be available after system startup).

Job Name:	Model Numbers:	
Job Number:		

Athena Security Statement

Lutron takes cybersecurity very seriously. We actively monitor the threat landscape and take a proactive approach to security and privacy, continuously working to update and enhance our systems and processes.

At Lutron, we call our approach to cybersecurity **"Secure Lifecycle"**, and we would like to present the following steps we take to protect your security and privacy:

- **Security by Design.** When building a new system, Lutron utilizes a dedicated security team to ensure best practices are implemented. Security is built in. It is not an afterthought or an add-on.
- **Third-Party Validation.** Security is complicated. Lutron has a dedicated team of internal experts, but we also leverage external experts to double-check our work, and to make security recommendations.
- **Continuous Monitoring and Improvements.** Security is a constantly moving target. Lutron uses a dedicated security team to continuously monitor for potential threats and, when needed, send out security patches to update installed systems.
- **Ongoing Support.** Lutron has the resources you need to answer questions about security when they arise

We incorporate a variety of security features into our product designs. These features include recommendations from the National Institute of Standards and Technology (NIST) among others, and they are aimed at meeting our secure lifecycle protections. While we do not publish a comprehensive list of our security features, the following list is a small example of some of the techniques employed in our system designs for Athena Processors, Light Management Hubs, Clear Connect – Type X Gateway devices and associated services (such as mobile applications and cloud resources):

1. Secure and authenticated remote access with unique keys for every Athena system
2. A secure hardware element ("chip") on all Athena processors and Clear Connect – Type X Gateway to guard the keys used for secure communication and authentication
3. Enforcing industry-standard encrypted communication and techniques for our integration protocols to the highest extent possible. Any integrated third-party components or systems should be evaluated independently.
4. Secure commissioning – all communication between the system programming software tool/app and the processors is encrypted and authenticated. Programming a system requires permission to access that system.
5. Security updates are pushed out automatically to the lighting system for urgent security patches. Lutron is committed to one year of security support from system start-up date.
6. Use of industry-standard techniques for cloud-based integrations, such as OAuth2.0
7. Signed processor firmware to ensure a firmware update is authentically from Lutron.

If you have additional questions or would like to make a vulnerability disclosure to Lutron, please contact Lutron's 24/7 Technical support Line at 1.844.LUTRON1 or email us at support@lutron.com.

Job Name:	Model Numbers:	
Job Number:		

Line Voltage Wiring

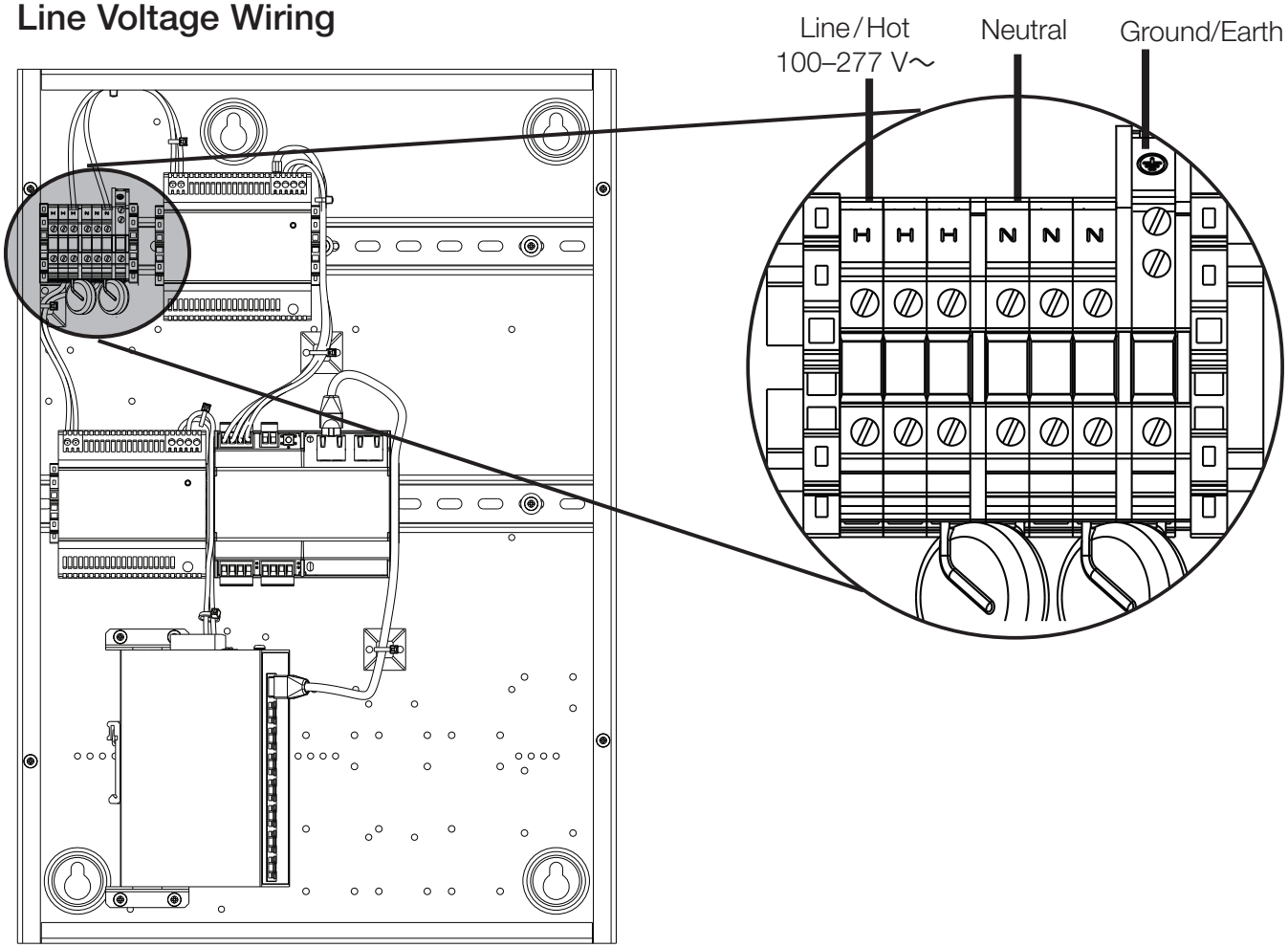

QP5-2L-POE shown

Notes

- Line voltage must enter hub in top left corner as shown above
- Lutron requires a 100–277 V~ normal feed. See Lutron Application Note 106 (P/N048106) at www.lutron.com for information on emergency lighting applications. Athena hubs and network switches providing power to Clear Connect Type X Gateways MUST be powered with normal power if Ketra loads are used for emergency lighting
- Lutron recommends no more than four Light Management Hubs are powered by a dedicated single derated 20 A circuit
- Run wiring so line (mains) Class 1 voltage is separate from IEC PELV/NEC® Class 2 wiring

Job Name:	Model Numbers:	
Job Number:		

Athena Hub Ethernet Link Wiring

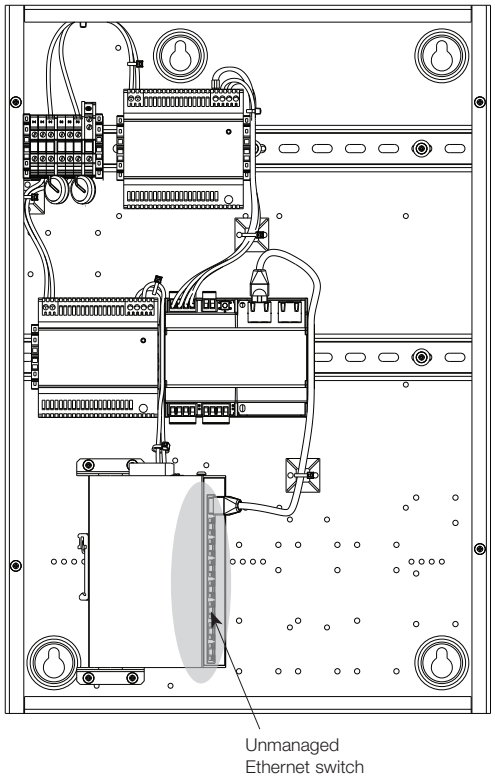

Notes

- Use Cat5e minimum cable for all connections between hubs and a Athena Clear Connect Gateway-Type X.
- The wiring between hubs and gateways is considered PELV/NEC® Class 2; do not run in the same conduit as line (mains) voltage wiring.
- Processors cannot be daisy-chained. Each must be connected to the internal Ethernet switch. The second Ethernet connection is used for service or diagnostics only.
- All system Ethernet wiring must comply with IEEE 802.3 standards.
- Wiring distance for any single “wire segment” is 328 ft (100 m) max; this applies for any Ethernet connections between hubs or to a Athena Clear Connect Gateway-Type X. Use Lutron’s Q-POE-PNL or unmanaged Ethernet switches for longer distances.
- For more information about connecting a Athena system to a corporate or building-wide network, please refer to the Athena IT Guide (P/N 040453) at www.lutron.com/AthenaITguide

Typical System Ethernet Wiring Riser Diagram

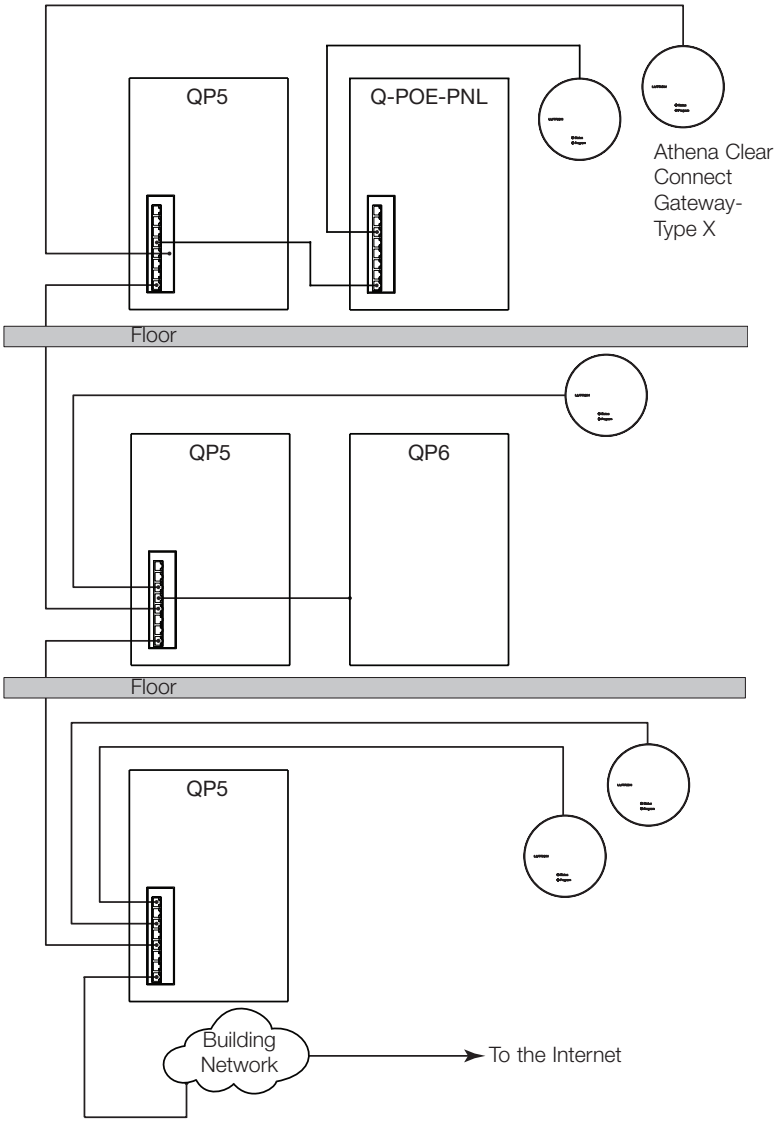

Note: Refer to the IT Guide at www.lutron.com/AthenaITguide for more information for managed switch configuration requirements.

Job Name:	Model Numbers:	
Job Number:		

Q-POE-PNL Wiring

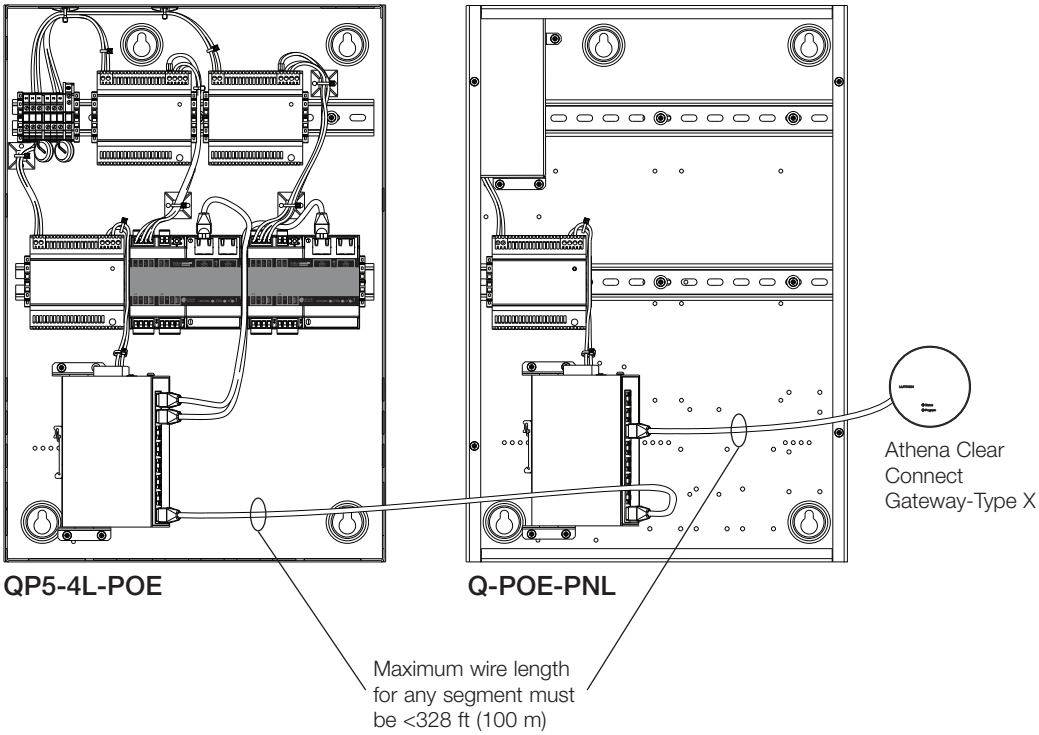

Notes

- For distances >328 ft (100 m) use a Lutron Q-POE-PNL or either a IEEE 802.3af-2003 or 802.3at-2009 compliant PoE extender (not by Lutron) or a PoE unmanaged Ethernet switch (not by Lutron).
- One Q-POE-PNL is required for every additional 328 ft (100 m).
- All connections between PoE switch and the Type X gateways should be Cat5e minimum.

Job Name:	Model Numbers:	
Job Number:		

Configurable Link Wiring: QS Link

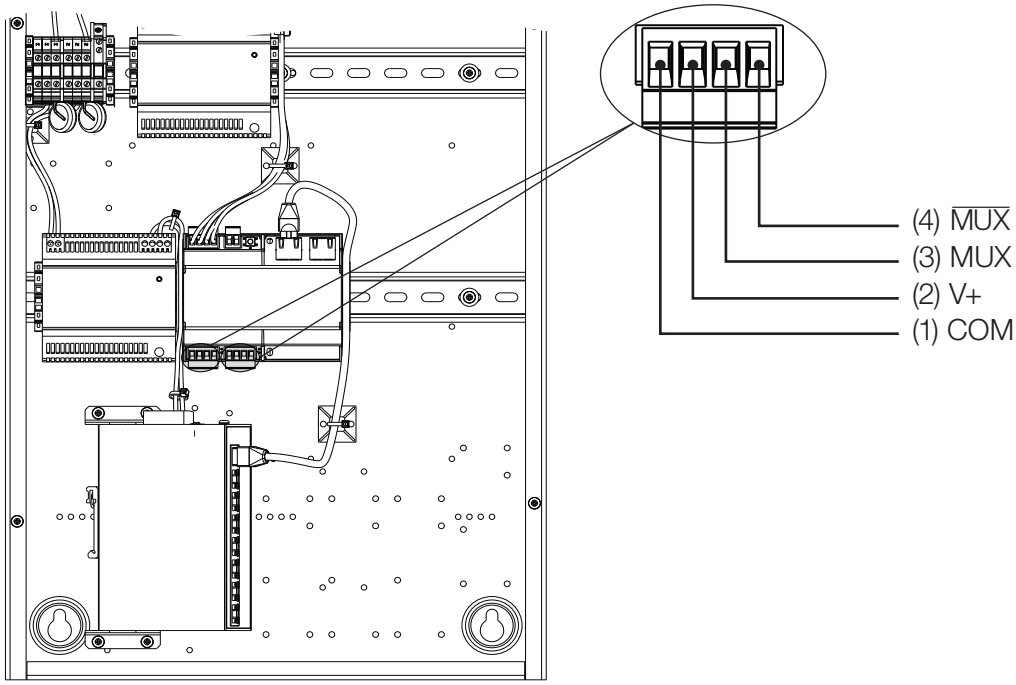

QP5-2L-POE shown

Maximum Link Length	Wire Gauge	Available from Lutron in one cable	Alternate Wiring
500 ft (152 m)	Power (terminals 1 and 2) 1 pair 18 AWG (1.0 mm²) Data (terminals 3 and 4) 1 pair 22 AWG (0.5 mm²) twisted and shielded	GRX-CBL-346S GRX-PCBL-346S	Power Connections: use two 18 AWG (1.0 mm²) stranded conductors Data connections: use Belden Cable #9461 (two 22 AWG (0.5 mm²) twisted shielded pair)
2000 ft (609 m)	Power (terminals 1 and 2) 1 pair 12 AWG (4.0 mm²) Data (terminals 3 and 4) 1 pair 22 AWG (0.5 mm²) twisted and shielded	GRX-CBL-46L GRX-PCBL-46L	Power Connections: use two 12 AWG (4.0 mm²) stranded conductors Data connections: use Belden Cable #9461 (two 22 AWG (0.5 mm²) twisted shielded pair)

Notes

- Link communication uses IEC PELV/NEC® Class 2 low-voltage wiring.
- Follow all local and national electrical codes when installing IEC PELV/NEC® Class 2 wiring with line voltage/mains wiring.
- Terminals will accept:
  – One 22 AWG to 12 AWG (0.5 mm² to 2.5 mm²) wire
  – Up to two 18 AWG (1.0 mm²) wires
- The total wire length of a link must not exceed 2000 ft (609 m).
- The Athena Light Management Hub provides 33 power draw units (PDUs) on each QS Link. For more information, see “Power Draw Units on the QS Link” (Lutron P/N 369405) at www.lutron.com
- QS Link Wiring can be T-tapped or daisy-chained.
- Shield wire will not land on the processor, it should be isolated from ground and all other connections.

Job Name:	Model Numbers:	
Job Number:		

Configurable Link Wiring: QS Link *(continued)*

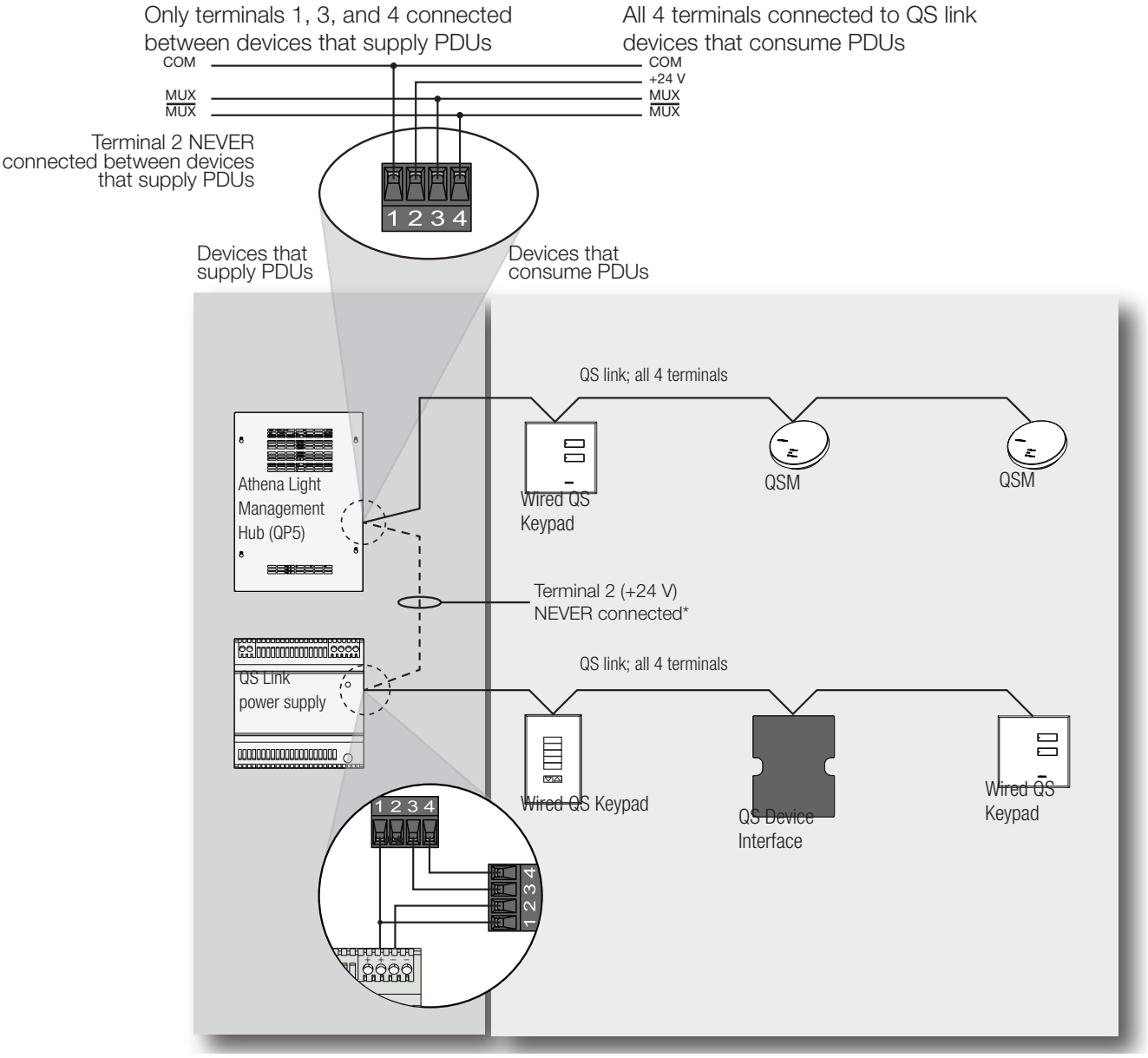

QS Link Wiring Rules

* Terminal 2 (+24 V) should NEVER be connected between devices that supply PDUs.

** For QS Link power supply wiring connection details, refer to the installation instructions for the specific power supply model being used.

Job Name:	Model Numbers:	
Job Number:		

Software

OpenADR Compliant

- OpenADR 2.0b compliant when used with LUT-Q-OPNADR-CPN8064

iOS Control Application

- The Athena system can have up to 10 simultaneously connected mobile app clients
- Compatible with Lutron App
- Requires iOS 13 or newer

Scheduling

- Events can be scheduled to occur at fixed times or relative to sunrise/sunset and can be programmed to occur once or to be reoccurring

User Access

- Username and password required for user access

Load Shed/Demand Response

- Participate in load shed/demand response programs offered by local utility companies
- Apply a load shed reduction to the system, thereby reducing the building's lighting power usage

DALI® Emergency Testing

Available to be configured on-site by Lutron qualified field service engineers for new or existing systems starting April 29, 2022.

- System capability that enables the Athena processor to schedule, manage, and report test results of DALI®-2 certified emergency loads connected to the QSN-2DALUNV-D/S modules.
- Processor must be connected to the internet to obtain the test results report

Lighting Control

- Monitor current status of areas, scenes, and zones
- Activate lighting scenes
- Adjust lighting zone levels
- Modify lighting zone levels in area scenes
- Control the intensity and color of Ketra fixtures
- Adjust saturated color and vibrancy of Ketra fixtures

QS Shade Control

- Monitor current status of shade groups and drives
- Activate shade presets
- Adjust shade levels

Job Name:	Model Numbers:	
Job Number:		

Compatible Models - North America

Load controls
– QSN-4T5-120-D
– QSN-2DALUNV-D
– QSN-4S8-120-D
– QSN-4A5-S
– QSN-4A5-120-D
– QSN-2ECO-120-D
– QSN-4S16-S
– QSN-4T16-S
– QSN-2ECO-S
– QSE-CI-DMX

Wall controls
– PJ2-*
– PX-*
– QSWA-*
– QSWAS-*
– QSWE-*
– QSWS2-*
– QSWS2-KS-*
– QWP-*

Shades
– Contract Roller Shades
– Sivoia QS Shades

Sensors
– GRX-IRPS
– EC-DIR*
– GRX-CES*
– LOS-*
– LRF2-OCR2B*
– LRF2-DCRB*
– LUT-WS*
– QSM2-*

Accessories
– LUT-19AV-1U
– LUT-5x10-ENC
– LFG*
– LTR-*
– LPFP-*
– L-PED*
– PICO-*

Power Interfaces
– TVI-LMF-2A
– C5-*
– PHPM-*
– GRX-TVI

Integration Interfaces
– LUT-Q-OPNADR-CPN8064
– QSE-CI-NWK-E
– QSE-IO
– QSE-CI-WCI

Emergency
– LUT-ELI-3PH (for QSN-* load control panels)
– LUT-SHUNT-A-TD (for Ketra loads)

Power Supplies
– QSPS-*

Cable
– QS-CBL-*
– GRX-CBL-*
– GRX-PCBL-*

* Designates additional model number characters that may vary depending on the specific model chosen.

Job Name:	Model Numbers:	
Job Number:		

Compatible Models - 220-240 V~ Regions

Load controls
– QSNE-4A5-230-D
– QSNE-4T10-230-D
– QSN-2DALUNV-D
– QSE-CI-4M-D
– QSNE-4S5-230-D
– QSE-CI-DMX

Wall controls
– Pxy-*
– PX-*
– QSWA-*
– QSWAS-*
– QSWE-*
– QSWS2-*
– QSWS2-KS-*
– QWP-*

Shades
– Contract Roller Shades
– Sivoia QS Shades

Sensors
– GRX-IRPS
– EC-DIR*
– GRX-CES*
– LOS-*
– LRFx-OCR2B*
– LRFx-DCRB*
– LUT-WS*
– QSMx-*

Accessories
– LUT-19AV-1U
– LUT-5x10-ENC
– LFG*
– LTR-*
– LPFP-*
– L-PED*
– PICO-*

Power Interfaces
– C5-*

Integration Interfaces
– QSE-CI-NWK-E
– QSE-IO
– QSE-CI-WCI

Emergency
– LUT-ELI-3PH (for QSN-* load control panels)

Power Supplies
– QSPS-*

Cable
– QS-CBL-*
– GRX-CBL-*
– GRX-PCBL-*

* Designates additional model number characters that may vary depending on the specific model chosen.

The Lutron logo, Lutron, Athena, EcoSystem, Energi Savr Node, GRAFIK Eye, Pico, and Ketra are trademarks or registered trademarks of Lutron Electronics Co., Inc. in the US and/or other countries.

All other product names, logos, and brands are property of their respective owners.

Job Name:	Model Numbers:	
Job Number:		

369241n 1 11.30.20

Energi Savr Node for 0–10 V⎓
Energi Savr Node with Softswitch

The Energi Savr Node (ESN) family is a group of modular products for the control of lighting and other loads. This document describes the following products:

- ESN unit for 0–10 V⎓ (models QSN-4T16-S — 0–10 V⎓ Control/Softswitch)
- Softswitch ESN unit (models QSN-4S16-S — Softswitch)

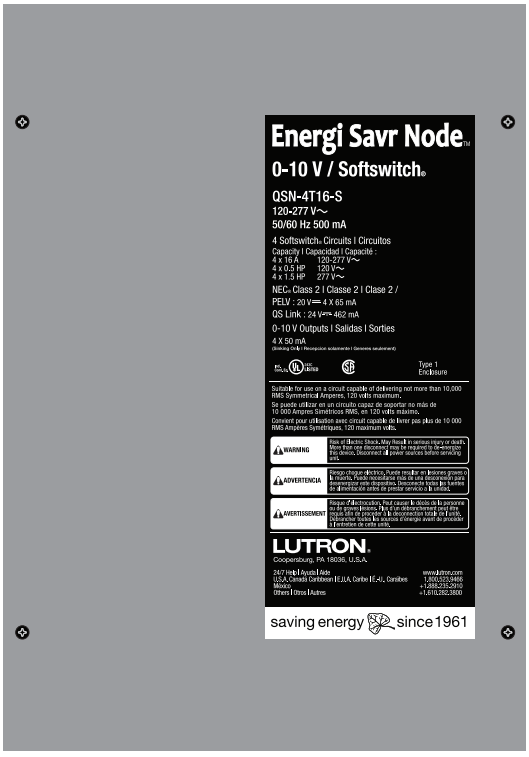

Features

- Default configuration requires no commissioning.
- Programming using integral interface on the ESN unit.
- Four occupancy sensor inputs for automated control of lights in 4 zones.
- Four daylight sensor inputs automatically adjust light levels based on the amount of natural light entering through the windows.
- Four IR receiver inputs for personal control.
- Four inputs for IEC PELV/NEC® Class 2 dry contact switches.
- Includes QS control link for seamless integration of lights, control stations, and QS sensor modules.
- Softswitch technology yields 1,000,000 cycle relay lifetime.
- Contact Lutron for compatibility with Quantum system.

System Example

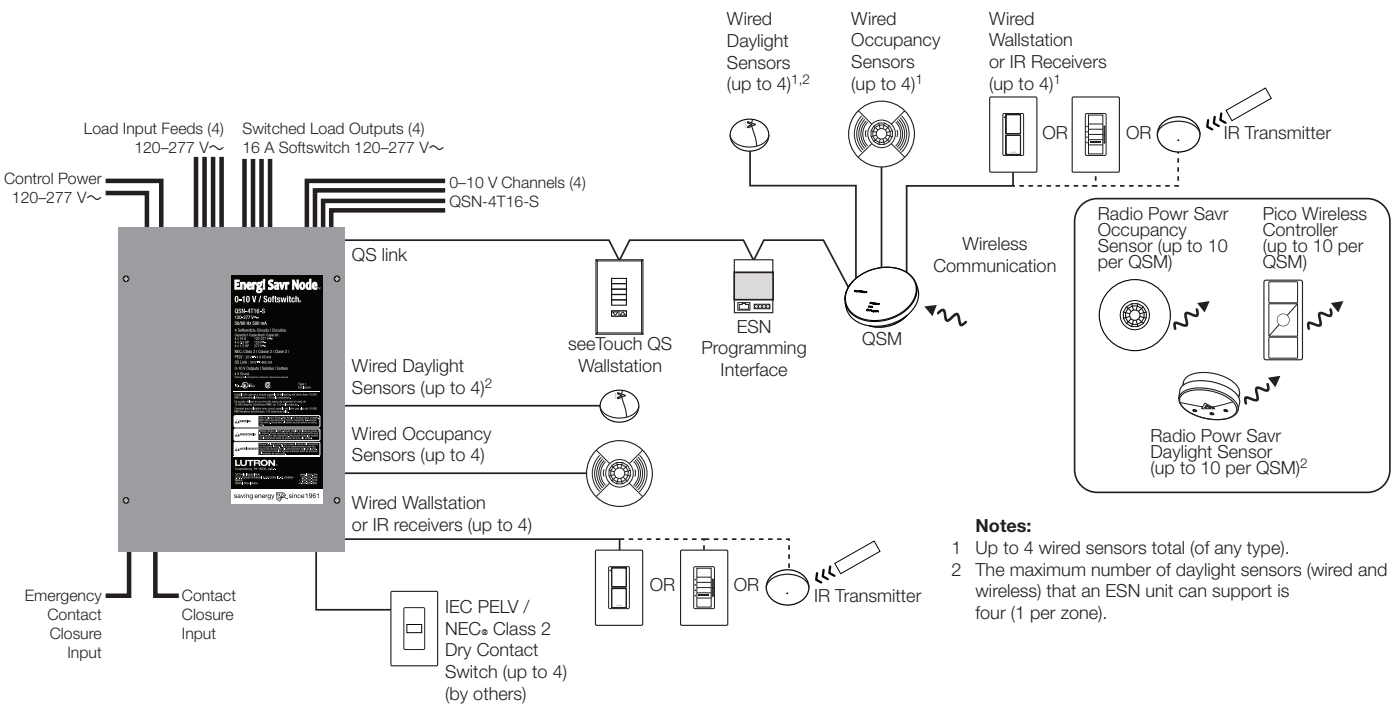

Notes:
1 Up to 4 wired sensors total (of any type).
2 The maximum number of daylight sensors (wired and wireless) that an ESN unit can support is four (1 per zone).

Job Name:	Model Numbers:	
Job Number:		

Specifications

Regulatory Approvals

- UL Listed
- CSA
- NOM
- Lutron Quality Systems registered to ISO 9001:2015
- Complies with requirements for use in other spaces used for environmental air (plenums) per NEC® 2014 300.22(C)(3)
- Meets the Canadian National Building Code plenum requirements for a concealed space used as a plenum within a floor or roof assembly
- For commercial use, Class A only

Power

- Control Power: 120 V∼; 220–240 V∼; 277 V∼ 50/60 Hz
- Lightning strike protection meets ANSI/IEEE standard 62.41-1991. Can withstand voltage surges of up to 6,000 V∼ and current surges of up to 3,000 A
- Current draw: 0.5 A max
- 10-year power failure memory: restores lighting to levels prior to power interruption
- Latching relays keep previously illuminated zones on when control power feed is lost

Environment

- Ambient Temperature Operating Range: 32 °F to 104 °F (0 °C to 40 °C)
- Relative humidity: less than 90% non-condensing
- For indoor use only
- Thermal dissipation: 40 BTU/hr

Terminal Wiring

- Control Power Wiring: 14 AWG to 12 AWG (2.5 mm^2 to 4.0 mm^2)
- Load Wiring: 14 AWG to 12 AWG (2.5 mm^2 to 4.0 mm^2)
- 0–10 V⎓ Wiring: 20 AWG to 12 AWG (0.5 mm^2 to 4.0 mm^2)
- Input Group Wiring: 20 AWG to 12 AWG (0.5 mm^2 to 4.0 mm^2) — maximum wire run length to each input not to exceed 150 ft (46 m)
- QS Link Wiring: 22 AWG to 12 AWG (0.5 mm^2 to 4.0 mm^2)
- Contact Closure Wiring: 20 AWG to 12 AWG (0.5 mm^2 to 4.0 mm^2)

Physical Design and Mounting

- NEMA Type 1, IP-20 protection
- Surface mount

Load Types (relay ratings)

- 16 A Tungsten, 120 to 277 V∼
- 16 A AC General Use, 120 to 277 V∼
- 16 A Electric Discharge Lamp (ballast), 120 to 277 V∼
- 16 A Inductive, 120 to 277 V∼
- 0.5 HP, 120 V∼
- 1.5 HP, 220 to 277 V∼
- Works with all ballasts and drivers that provide a current source that is compliant to IEC 60629 Annex E.2, and whose inrush current does not exceed NEMA410 standards for electronic ballast/driver

Input Default Associations

	Inputs/Outputs	Zone 1	Zone 2	Zone 3	Zone 4
Group 1	Occ	X			
	Photo	X			
	IR	X			
	Switch	X			
Group 2	Occ		X		
	Photo		X		
	IR		X		
	Switch		X		
Group 3	Occ			X	
	Photo			X	
	IR			X	
	Switch			X	
Group 4	Occ				X
	Photo				X
	IR				X
	Switch				X
	CCI	X	X	X	X
	Emergency CCI	X	X	X	X

Softswitch: 120 V∼ to 277 V∼

- Softswitch relay is rated for 16 A continuous use per channel, which is the maximum continuous load for a 20 A Overcurrent Protection Device (Branch Breaker).
- Patented Softswitch circuit eliminates arcing at mechanical contacts when loads are switched. Extends relay life to an average of 1,000,000 cycles (on/off) for resistive, capacitive, or inductive sources.
- Relay is mechanically held.

Job Name:	Model Numbers:	
Job Number:		

Specifications *(continued)*

0–10 V⎓ Product Ratings (QSN-4T16-S)

- Each output sinks up to 50 mA maximum.
- Each output sinks current only (load device must provide 10 V⎓ supply).
- Provides an IEC PELV/NEC® Class 2 isolated 0–10 V⎓ output signal that conforms to IEC 60929.

Occupancy Sensors

- Up to 16 occupancy sensors can be programmed to the ESN device.
- Manual Programming: up to 4 occupancy sensors wired directly to the ESN device, up to 4 occupancy sensors wired to a QS Sensor Module (QSM), and up to 10 wireless occupancy sensors through the same QSM; the total programmed to the ESN device cannot exceed 16.
- HHD (*iPod*/*iPhone*) Programming: up to 16 occupancy sensors from any source (wired directly to the ESN device, wired to any other ESN device, or wired/wireless from any QSM on the QS link); the total programmed to the ESN device cannot exceed 16.
- Use Lutron occupancy sensors to control one or more zones.
- Use Lutron occupancy sensors in vacancy mode to automatically turn the lights off in an area after it becomes vacant.
- Each zone can be programmed to automatically turn the lights on when occupied and turn the lights off when vacant.
- Each wired occupancy input can power one Lutron occupancy sensor.
- Each occupied scene and unoccupied scene can be programmed independently.
- Lutron occupancy sensors can be programmed to automatically turn the lights on in area when it becomes occupied and turn the lights off in an area after it becomes vacant.
- Each of the four occupancy inputs can power one Lutron occupant sensor.
- Each area's occupied scene and unoccupied scene can be programmed independently.
- Occupancy sensor must provide a dry contact closure or solid-state output.
- Additional occupancy sensors can be used with the ESN device. Refer to the "Programming Options and Features" table for system rules.

seeTouch QS Controls

- seeTouch QS wallstations can be configured to control ESN unit scenes or zones.
- In zone toggle mode, zone buttons can be assigned to one or more zones on any ESN unit connected to the QS Link.
- In scene mode, wallstations can be assigned to one or more ESN units connected to the QS Link.
- LED indicator displays zone or scene status.

Table 1: seeTouch QS Wallstation Configurations

	# Buttons				
Wallstation Function	**1**	**2**	**3**	**5**	**7**
Zone Toggle	✓	✓	✓	✓	✓
Scene	1, Off (toggle)	1, Off	1, 2 Off	1-4, Off	N/A

IR Wallstation or Receiver Input

- Four inputs for IR receivers or wallstations for control of lighting zones can be connected directly to the ESN unit.
- Use Lutron CC-4BRL-WH wallstations to control one or more zones.
- Use Lutron EC-DIR-WH ceiling-mount sensors to control one or more zones.
- Up to four additional wired wallstations or IR receivers can be assigned when associated with a QSM.
- Associate additional QSMs and sensors/controls with ESN unit when programming with an *Apple iPod touch* or *iPhone*. Refer to "Programming Options" section for details.

Specifications (continued)

Daylight Sensors

- Lutron daylight sensors allow daylight harvesting with programmable effect on light output.
- Four daylight sensors can be connected directly to the ESN unit.
- Use Lutron EC-DIR-WH sensors to control one or more zones.
- Alternatively, up to four sensors (Lutron Wired Daylight Sensors or Radio Powr Savr Daylight Sensors) can be assigned when associated with a QSM.
- The maximum number of Lutron daylight sensors (wired or wireless), either wired directly to the unit or indirectly (associated with a QSM) cannot exceed four.
- Associate additional QSMs and sensors/controls with ESN unit when programming with an *Apple iPod touch* or *iPhone*. Refer to "Programming Options" section for details.

Contact Closure Input (CCI)

Default behavior:

- Activate scenes using momentary or maintained closures from an external device such as a timeclock.
- Start or stop Afterhours Mode using a maintained closure.
- The attached device must provide a dry contact closure or solid-state output.
- Configurable for Normally-Open (NO) or Normally-Closed (NC) operation.
- Input is miswire-protected up to 36 V⎓.

Emergency Contact Closure Input

- By default, contact closure input from Lutron Emergency Lighting Interface (LUT-ELI-3PH), security, or fire alarm systems turns all zones on to full output when emergency state is detected.
- Emergency contact closure input is normally closed (NC). The ESN unit is shipped with a jumper pre-installed.
- Response of each zone is configurable.
- Attached devices, by default, will go to maximum output and ignore control inputs.
- No operations will be allowed until emergency signal is cleared.
- The attached device must provide a dry contact closure or solid-state output.
- Input is miswire-protected up to 36 V⎓.
- Emergency CCI cannot control other ESN units.

Functionality with GRAFIK Eye QS

- ESN unit follows GRAFIK Eye QS scene activations when associated with the GRAFIK Eye QS.
- ESN unit responds to commands initiated by the GRAFIK Eye QS astronomic time clock when associated with the GRAFIK Eye QS.
- ESN unit operates in afterhours mode when associated with a GRAFIK Eye QS that is in afterhours mode.

Functionality with QSE-IO

- ESN unit responds to scene commands initiated by the QSE-IO, if the QSE-IO DIP switches have been set to either scene selection mode, zone toggle mode, partition mode, or occupancy sensor mode.

Functionality with QSE-CI-NWK-E

- Integrate ESN unit with touchscreens, PCs, A/V systems, or other digital systems and devices.
- Recall scenes and set/adjust zone levels.

Job Name:	Model Numbers:	
Job Number:		

Specifications (continued)

IEC PELV/NEC® Class 2 Dry Contact Switches

- Four inputs for IEC PELV/NEC® Class 2 dry contact switches can be assigned to turn on and off one or more zones.
- Configure for momentary or maintained operation.

QS Link Limits

- Each ESN unit can provide up to 14 Power Draw Units (PDUs) for other QS devices. Refer to the QS Link Power Draw Unit specification submittal (Lutron P/N 369405) for more information concerning PDUs.
- The QS Link can have up to 100 devices and 100 zones.
- Each ESN unit counts as 1 device towards the 100 device limit.
- Each ESN unit counts as 4 zones towards the 100 zone limit.

QSM (QS Sensor Module)

- Use the QSM to integrate Radio Powr Savr Occupancy sensors, Radio Powr Savr Daylight sensors, and Pico Wireless Controllers to control zones on the ESN unit.
- Associate 1 QSM per ESN unit with manual programming.
- Associate multiple QSMs per ESN unit with *Apple iPod touch* or *iPhone* programming (requires QSE-CI-AP-D and Wi-Fi router). See "Programming Options" for details.
- Assign up to 10 Radio Powr Savr Occupancy sensors per ESN unit via QSM.
- Assign up to 4 Radio Powr Savr Daylight sensors per ESN unit via QSM.
- Assign up to 10 Pico Wireless Controllers per ESN unit via QSM.
- The sensors and Pico Wireless Controllers associated with the QSM should be mounted within 60 ft (18 m) line of sight, or 30 ft (9 m) through walls, of the QSM.
- Wire and power up to 4 wired sensors per QSM
  – Daylight Sensors
  – Occupancy Sensors
  – Infrared (IR) Receivers or Wallstations
- Refer to QSM Specification Submittal for more information.

Job Name:	Model Numbers:	
Job Number:		

Programming Options

Manual Programming:

- Use buttons on the front of the ESN unit.
- Use manual programming in installations with only one ESN unit and with one QSM or fewer on the QS link.

HHD Programming

- Requires ESN Programming Interface (QSE-CI-AP-D).
- Requires *Apple iPod touch* or *iPhone* mobile digital device.
- Use the intuitive programming application for the *Apple iPod touch* or *iPhone* to program systems with multiple ESN units and QSMs in the QS link.
- Wireless router only required for programming with an *Apple iPod touch* or *iPhone*.

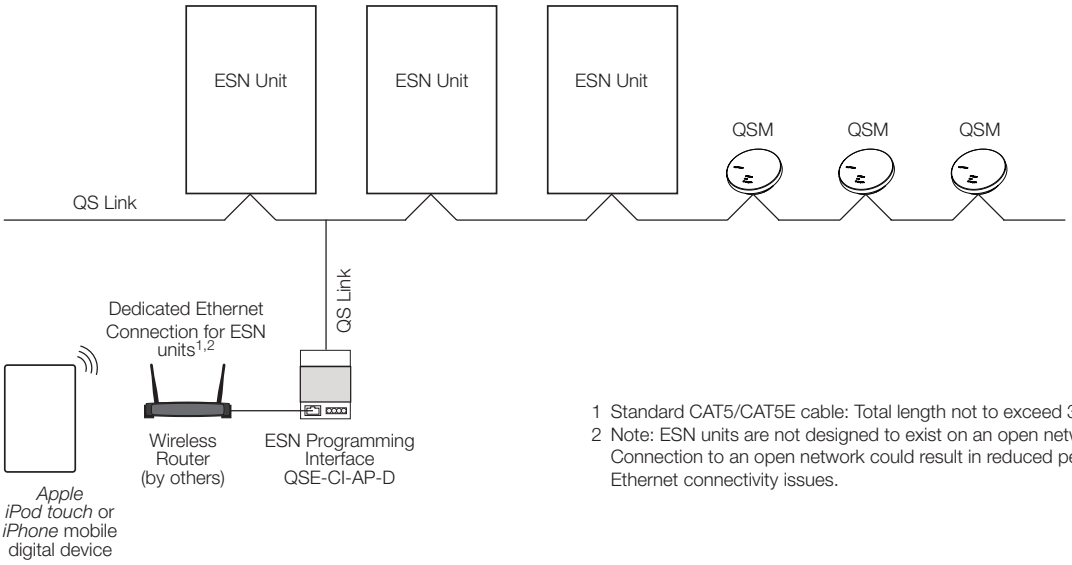

1 Standard CAT5/CAT5E cable: Total length not to exceed 300 ft (100 m)
2 Note: ESN units are not designed to exist on an open network. Connection to an open network could result in reduced performance and Ethernet connectivity issues.

- Wireless router may be removed for normal operation.
- Ethernet connection may be made via an ESN Programming Interface (QSE-CI-AP-D) or an ESN QS unit with integral Ethernet jack.
- Lutron recommends that an ESN Programming Interface (or ESN QS unit with Ethernet jack) be wired to an Ethernet jack in the space for ease of access and proximity to power for the wireless router.
- Works with any standard wireless router that supports multicast packets.
- *Apple iPod touch* or *iPhone* can program all ESN QS units connected to an ESN Programming Interface via the QS Link (except when part of a Quantum system).
- ESN app is required and is available from the *Apple App Store Store* online marketplace.

Job Name:	Model Numbers:	
Job Number:		

Programming Options and Features

	Manual Programming	HHD Programming: • Requires ESN Programming Interface QSE-CI-AP-D • Requires *Apple iPod touch* or *iPhone* mobile digital device
ESN units connected to 1 QS Link	Not more than 1	Multiple—100 QS devices and 100 zone limits apply
QSMs connected to 1 QS link	Not more than 1	Multiple—100 QS devices limit applies

Wired Occupancy Sensors

System Limits	4 connected directly to ESN unit Up to 4 wired to QSM	Up to 100 total occupancy sensors per QS link (wired + wireless)
Can be assigned to…	Any zone(s) on the ESN unit	Zones on ESN unit or share to other ESN units on same QS link
Occupancy Dependency Supported	No	Yes

Wireless Occupancy Sensors

System Limits	Associate 10 occupancy sensors to QSM to control zones on the ESN unit	Up to 100 total occupancy sensors per QS link (wired + wireless)
Can be assigned to…	Any zone(s) on the ESN unit	Zones on ESN unit or share to other ESN units on same QS link
Occupancy Dependency Supported	No	Yes

Wired Daylight Sensors

System Limits	Maximum of 1 daylight sensor per zone 4 connect directly to the ESN unit Additional daylight sensors can connect to the QSM	Maximum of 2 daylight sensors per zone Up to 100 total daylight sensors per QS link (wired + wireless)
Can be assigned to…	Any zone(s) on the ESN unit	Zones on ESN unit or share to other ESN units on same QS link
Disable daylighting in Scenes	No	Yes

Wireless Daylight Sensors

System Limits	Maximum of 1 daylight sensor per zone Associate wireless daylight sensors to the QSM	Maximum of 2 daylight sensors per zone Associate up to 10 wireless daylight sensors per QSM Up to 100 total daylight sensors per QS link (wired + wireless)
Can be assigned to…	Any zone(s) on the ESN unit	Zones on ESN unit or share to other ESN units on same QS link
Disable daylighting in Scenes	No	Yes

Job Name:	Model Numbers:	
Job Number:		

Programming Options and Features *(continued)*

	Manual Programming	HHD Programming: • Requires ESN Programming Interface QSE-CI-AP-D • Requires *Apple iPod touch* or *iPhone* mobile digital device

Pico Wireless Controllers

System Limits	Associate 10 Pico wireless controllers to QSM to control zones on the ESN unit	Up to 100 total controls per QS link (wired wallstations, Pico wireless controllers, IR receivers)
Can be assigned to…	Any zone on the local ESN unit	Zones on ESN unit or share to other ESN units on same QS link

IR Receivers and Wallstations

System Limits	4 connect directly to the ESN unit Up to 4 wired to the QSM	Up to 100 total controls per QS link (wired wallstations, Pico wireless controllers, IR receivers)
Can be assigned to…	Any zone on the local ESN unit	Zones on ESN unit or share to other ESN units on same QS link

NEC® dry contact Switches Inputs

Can be assigned to…	Any zone(s) on the connected ESN	Any zone(s) on the connected ESN

Contact Closure Input

Can be assigned to…	Any zone(s) on the ESN unit	Any or all local ESN unit zones
Functions	• Sweep to off • Enable/disable afterhours • Turn on to preset and turn off	• Sweep to off • Enable/disable afterhours • Turn on to preset and turn off
Afterhours Configuration	afterhours timeout – 15 minutes blink-warn timeout – 5 minutes	Afterhours timeout and blink-warn timeouts are configurable

Emergency Contact Closure Input

Can be assigned to…	Any zone(s) on the ESN unit	Any or all local ESN zones
Emergency Light level	Configurable	Configurable

Job Name:	Model Numbers:	
Job Number:		

Programming Options and Features *(continued)*

	Manual Programming	HHD Programming: • Requires ESN Programming Interface QSE-CI-AP-D • Requires *Apple iPod touch* or *iPhone* mobile digital device
seeTouch QS wallstations		
Scene Keypads assigned to…	Any zone(s) on the ESN unit	Any zone(s) on one or more ESN units on the QS link
Scene + off keypads assigned to…	Any zone(s) on the ESN unit	Any zone(s) on one or more ESN units on the QS link
Zone toggle keypad buttons assigned to…	Any zone(s) on the ESN unit	Any zone(s) on on or more ESN units on the link
Change Keypad to Scene or Zone	Yes	Yes
Changing keypads to shade, panic, fine tune	No	Yes
Zone Configuration Parameters		
Load type	0-10, 10-0, or switched	0-10, 10-0, or switched
High-end trim	Adjustable	Adjustable
Low-end trim	Adjustable	Adjustable
Absolute minimum level	Adjustable	Adjustable
Scenes		
Available scenes	Scenes 1-16	Scenes 1-16
GRAFIK Eye QS	N/A	Share scenes, timeclock events, or afterhours events to ESN units on QS Link
QSE-IO	Scene, zone toggle, occupancy	Scene, zone toggle, occupancy
QSE-CI-NWK-E	Yes	Yes

Job Name:	Model Numbers:	
Job Number:		

Mechanical Dimensions

All dimensions shown as in (mm)

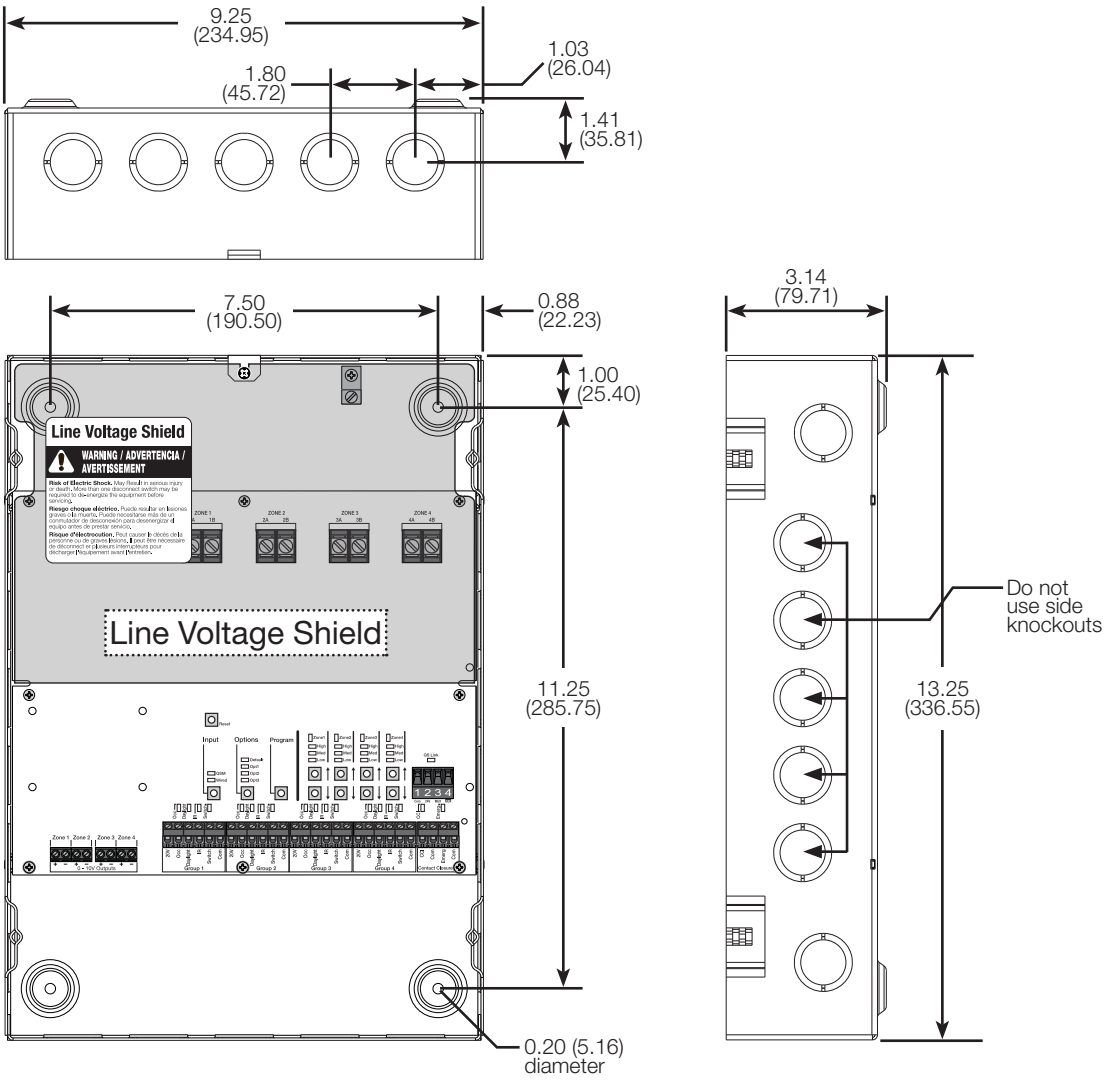

Job Name:	Model Numbers:	
Job Number:		

Wiring: QS Link

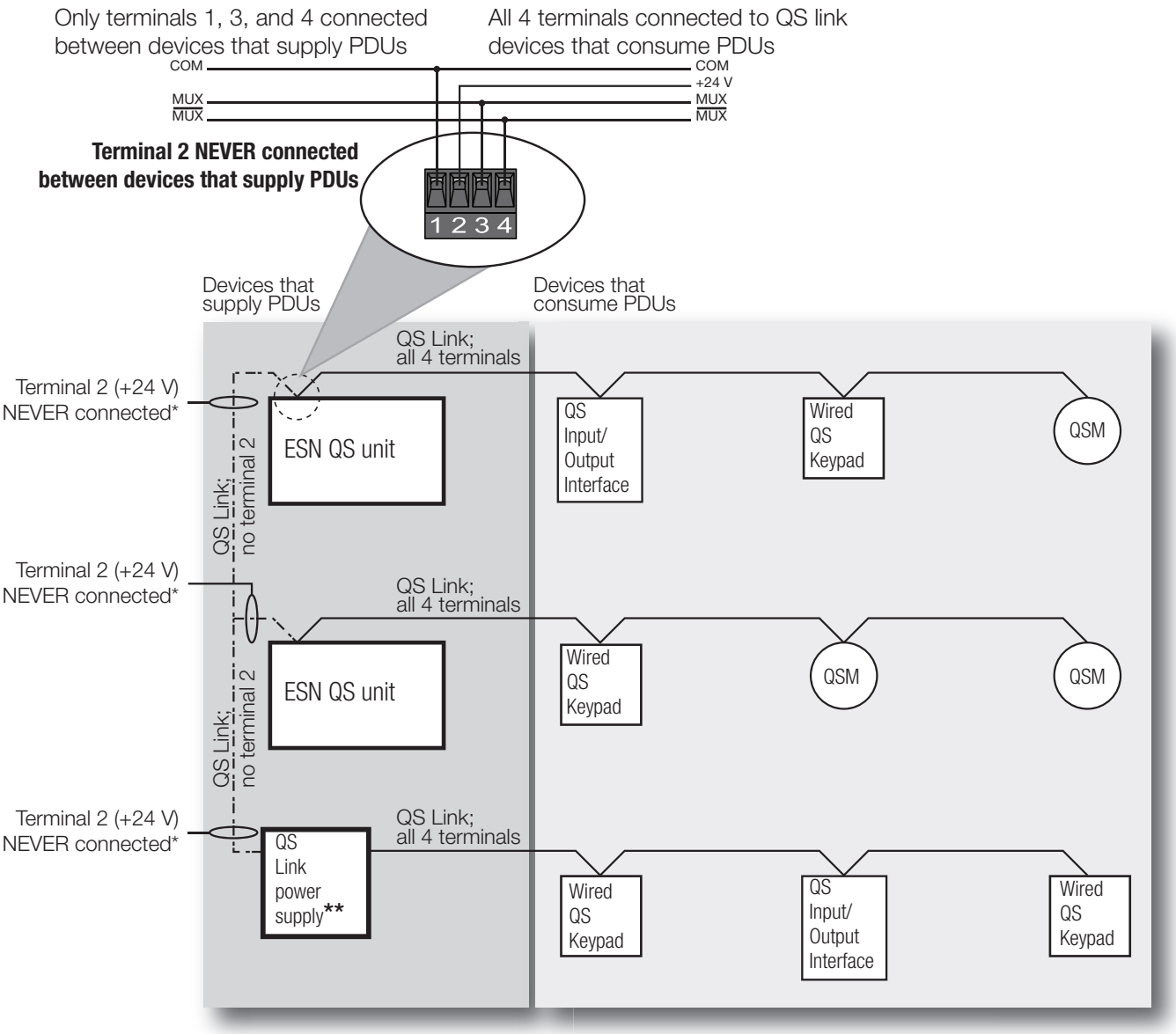

QS Link Wiring Rules

* Terminal 2 (+24 V) should NEVER be connected between devices that supply PDUs.

** For QS Link power supply wiring connection details, refer to the installation instructions for the specific power supply model being used.

Job Name:	Model Numbers:	
Job Number:		

Wiring: IEC PELV/NEC® Class 2 Inputs

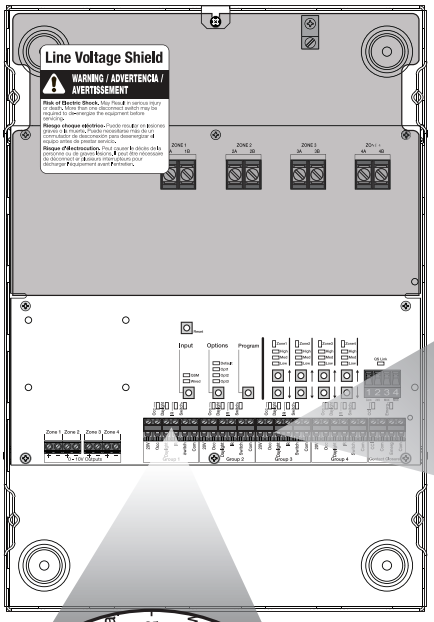

NOTE: There are four input groups. Each group has the same inputs as shown in the diagram below.

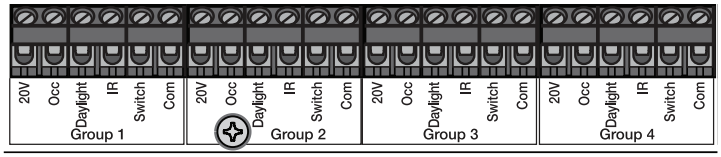

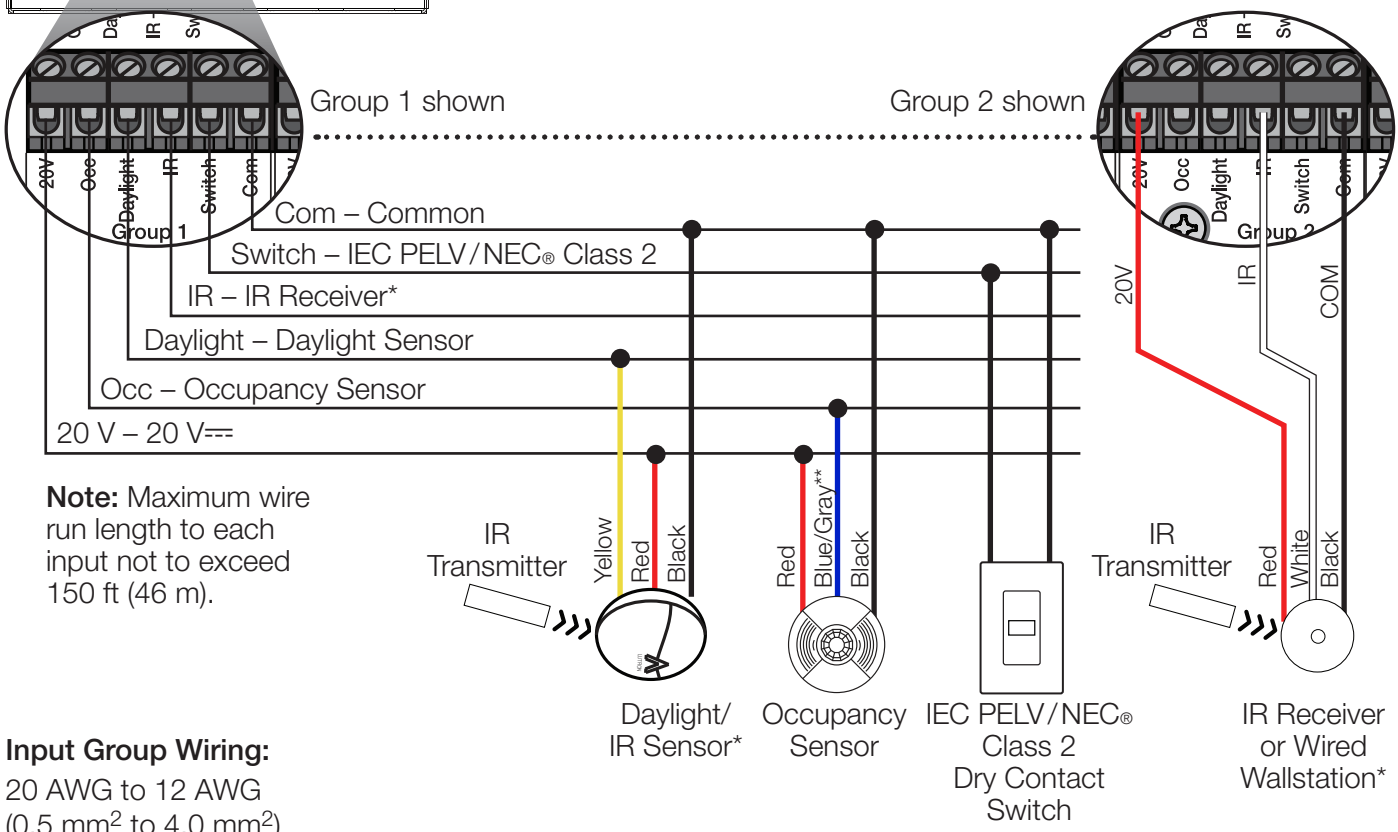

Note: Maximum wire run length to each input not to exceed 150 ft (46 m).

Input Group Wiring:

- 20 AWG to 12 AWG (0.5 mm^2 to 4.0 mm^2)
- Strip length: 1/4 in (6 mm)
- Torque: 5 in•lb (0.5 N•m)

* **Note:** Only one IR device may be connected per input. If the IR signal from a daylight sensor is connected, a wall control may not be connected to the same input, and vice-versa.

**Connect the gray wire on -R model occupancy sensors.

Job Name:	Model Numbers:	
Job Number:		

Wiring: Contact Closure Inputs (CCI and Emerg)

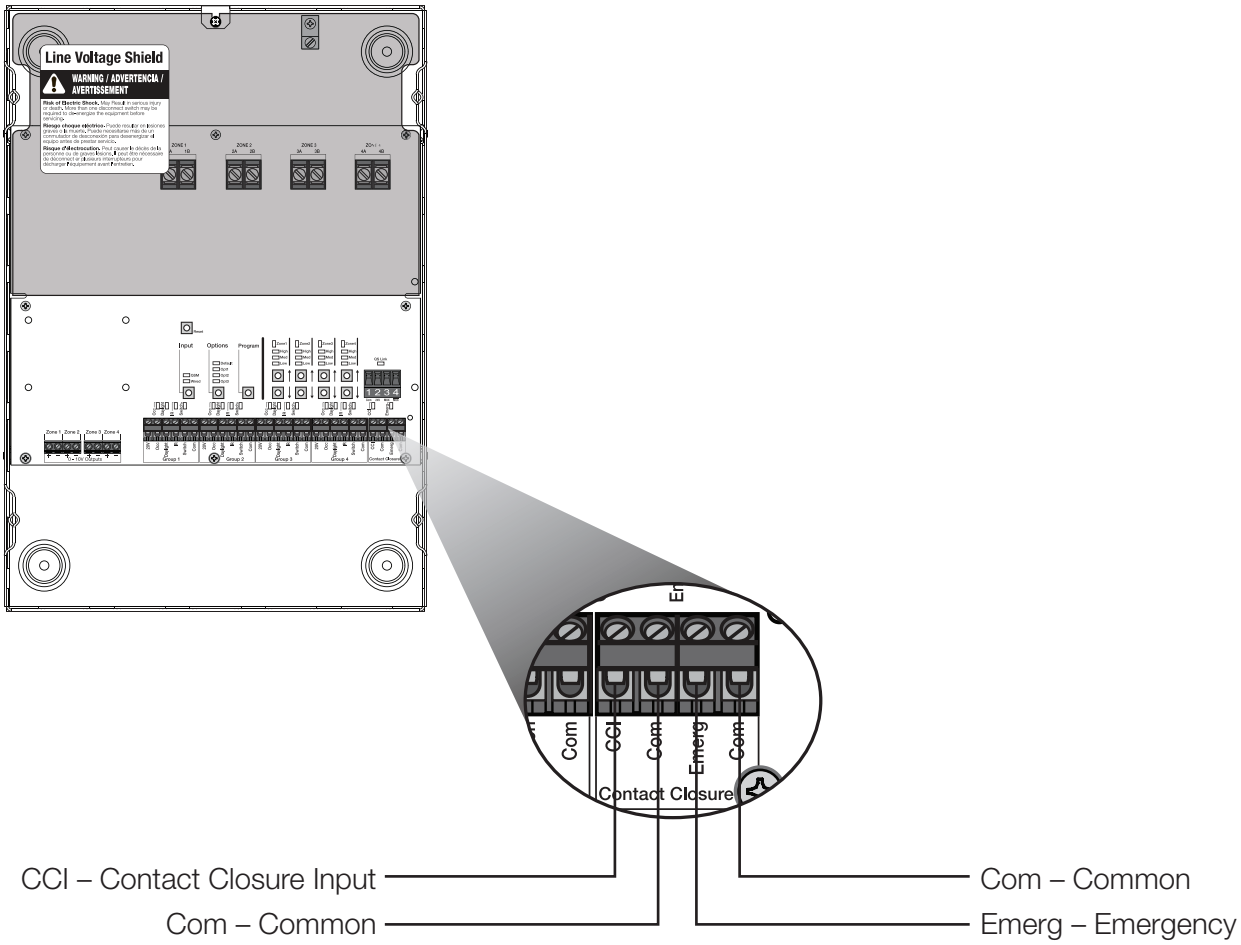

Contact Closure Wiring:

- 20 AWG to 12 AWG ($0.5\ mm^2$ to $4.0\ mm^2$)
- Strip length: 1/4 in (6 mm)
- Torque: 5 in•lb (0.5 N•m)

Job Name:	Model Numbers:	
Job Number:		

Wiring Diagram: Example A – 4 circuits, multiple feeds

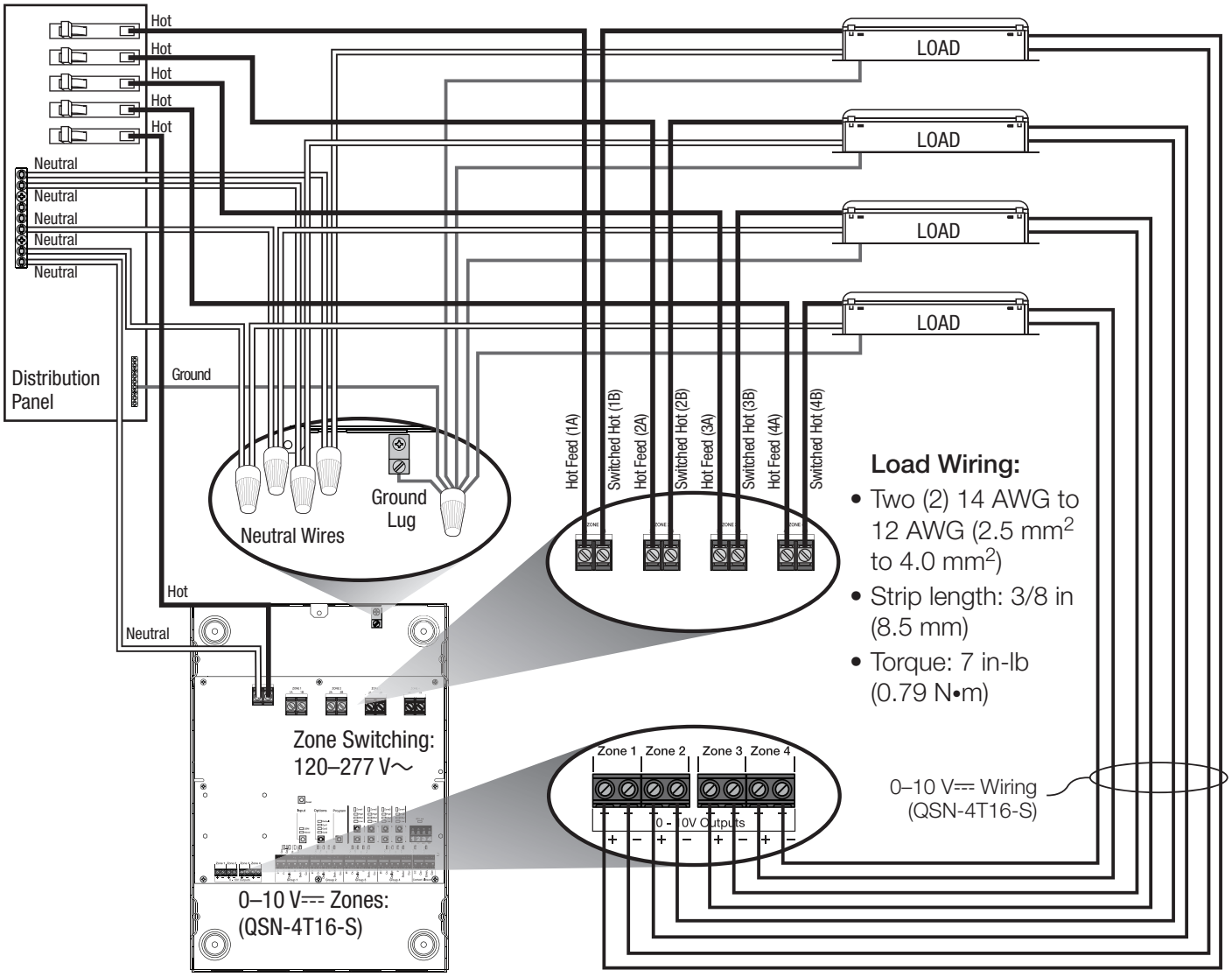

0-10 V⎓ Wiring (QSN-4T16-S)

- 20 AWG to 12 AWG (0.5 mm^2 to 4.0 mm^2)
- Strip length: 1/4 in (6 mm)
- Torque: 5 in-lb (0.5 N•m)
- 0-10 V⎓ control wires for zones 1-4 can be installed using NEC® Class 1 or Class 2 wiring methods.
- 0-10 V⎓ zones 1-4 are not isolated from each other.
- Negative (–) terminals are not internally connected to each other - both positive (+) and negative (–) connections must be made.
- Follow all national and local codes for separation requirements.
- If any pair of 0-10 V⎓ control wires are installed using NEC® Class 1 wiring methods, then these wires must be physically separated from all other Class 2 wiring in the Energi Savr Node in accordance with NEC® guidance on separation of Class 1 and 2 wires.
- If one pair of 0-10 V⎓ control wires are wired using NEC® Class 1 wiring methods, then all pairs of 0-10 V⎓ control wires must be installed using NEC® Class 1 wiring methods.

Job Name:	Model Numbers:	
Job Number:		

Wiring Diagram: Example B – 4 circuits, single feed

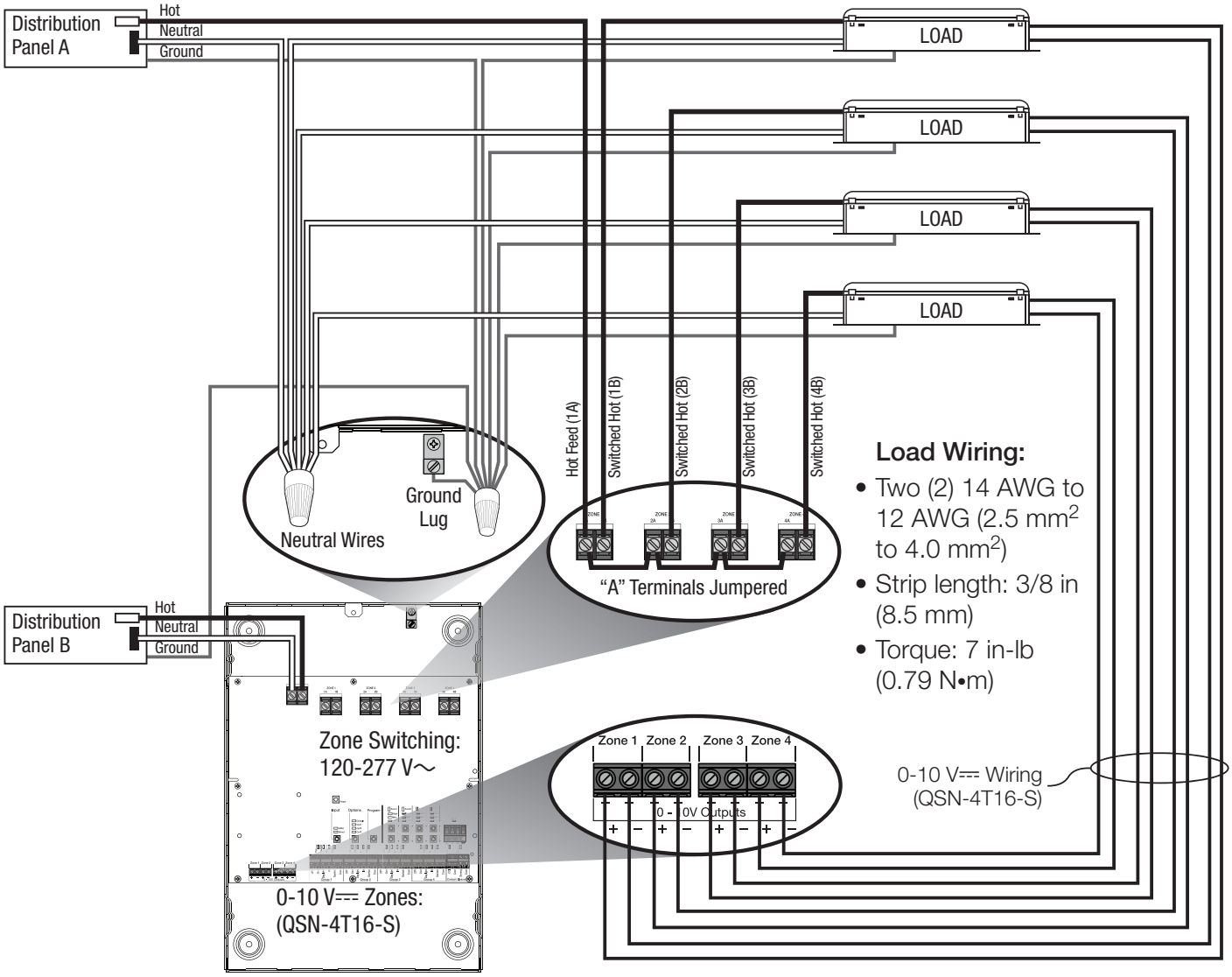

Load Wiring:

- Two (2) 14 AWG to 12 AWG (2.5 mm^2 to 4.0 mm^2)
- Strip length: 3/8 in (8.5 mm)
- Torque: 7 in-lb (0.79 N•m)

0-10 V Wiring (QSN-4T16-S)

- 20 AWG to 12 AWG (0.5 mm^2 to 4.0 mm^2)
- Strip length: 1/4 in (6 mm)
- Torque: 5 in-lb (0.5 N•m)
- Connect only IEC PELV/NEC® Class 2 circuits or connect only non-IEC PELV/NEC® Class 2 circuits to 0-10 V⎓ zones 1-4.
- 0-10 V⎓ zones 1-4 are not isolated from each other.
- Negative (–) terminals are not internally connected to each other - both positive (+) and negative (–) connections must be made.
- Follow all national and local codes for separation requirements.

Lutron, Lutron, Softswitch, seeTouch, Pico, Quantum, Energi Savr Node, Radio Powr Savr, and GRAFIK Eye are trademarks or registered trademarks of Lutron Electronics Co., Inc. in the US and/or other countries.

Apple, iPhone, and iPod touch are trademarks of Apple Inc., registered in the U.S. and other countries.

App Store is a service mark of Apple, Inc

Job Name:	Model Numbers:	
Job Number:		

369242p 1 11.08.19

QS Sensor Module

The QS Sensor Module (QSM) is a ceiling-mounted device that integrates Lutron wireless and wired sensors and controls through the QS communication link to Energi Savr Node (ESN) units, GRAFIK Eye QS control units, Quantum systems, myRoom control modules, and Sivoia QS shades/draperies.

Features

- Uses Clear Connect RF technology for communication with Radio Powr Savr sensors and Pico wireless controls.
- QSM connects to four Lutron wired sensors or controls—sensors, EcoSystem infrared (IR) receivers, or EcoSystem wallstations. Does not apply to wireless only models.
- Powered by the QS link—no line voltage connections are required.
- Contact Lutron for compatibility details with the Quantum system.
- Compatible with the entire ESN product family:
  - Allows Lutron wired sensors, EcoSystem wallstations, EcoSystem IR receivers, Pico wireless controls, and Radio Powr Savr sensors to control ESN units.
- Compatible with myRoom power modules.
  - Allows Lutron wired and wireless occupancy/vacancy sensors to control power modules.
  - Allows Pico wireless controls to control power modules.
- Compatible with GRAFIK Eye QS control units.
  - GRAFIK Eye QS control unit models starting with QSGR.
  - Allows Lutron wired or Radio Powr Savr wireless sensors linked to a QSM to control the GRAFIK Eye QS control unit.
  - Contact Lutron for compatibility with Pico wireless controls, EcoSystem wallstations, and EcoSystem infrared (IR) receivers.
- Compatible with Sivoia QS shades/draperies.
  - Allows Pico wireless controls to control Sivoia QS shades/draperies (QSM models with wireless inputs only).

System Example

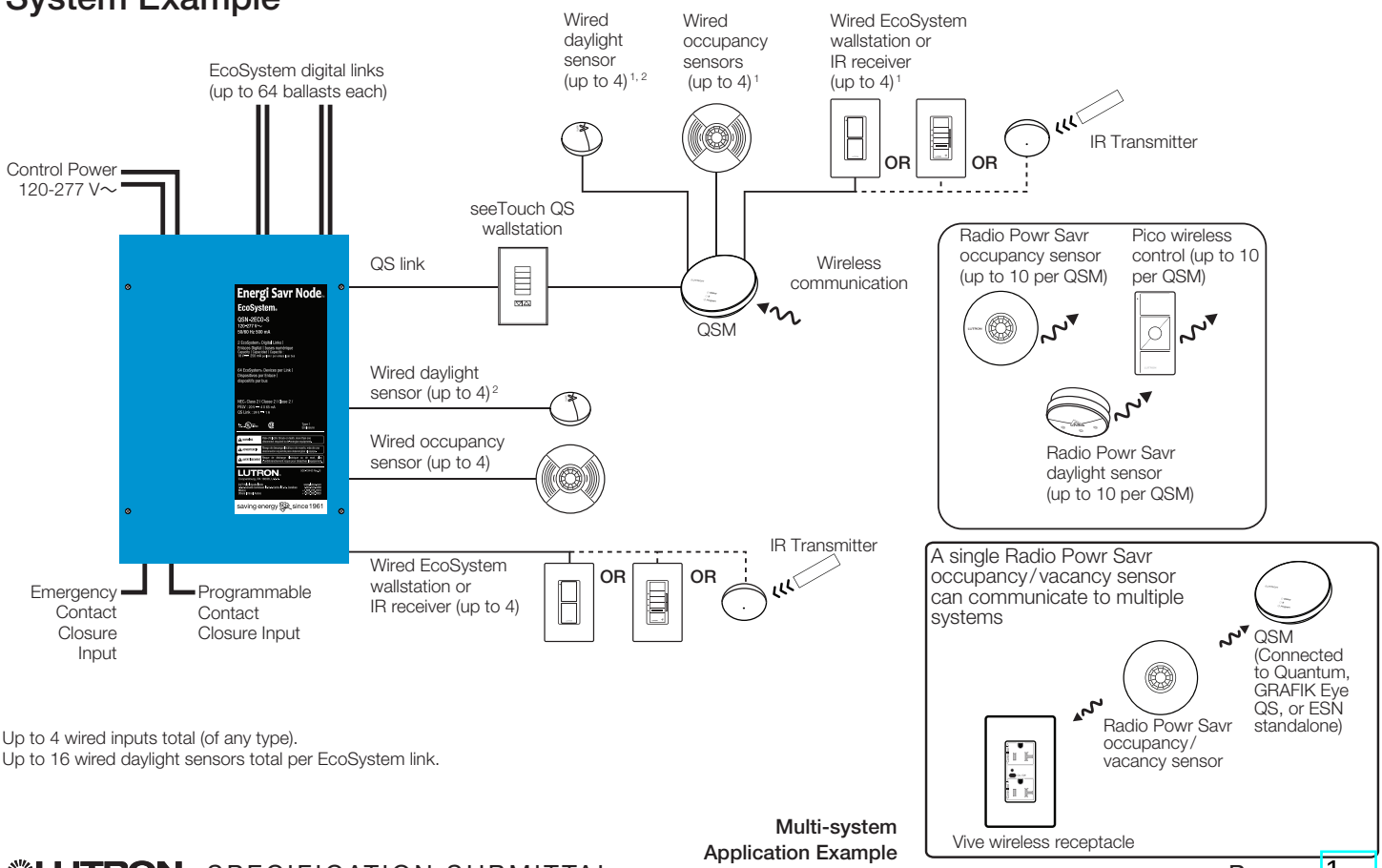

[1] Up to 4 wired inputs total (of any type).
[2] Up to 16 wired daylight sensors total per EcoSystem link.

Multi-system Application Example

Job Name:	Model Numbers:	
Job Number:		

369242p 2 11.08.19

Models

Frequency/Channel Code*
Number of Wired Inputs
Mounting Method

QSMX-XW-X

Frequency/Channel Code*

2—431.5 - 436.6 MHz U.S.A., Canada, and Mexico
3—868.1 - 869.8 MHz European Union and United Arab Emirates
4—868.1 - 868.5 MHz Singapore and China
5—865.5 - 866.5 MHz India
7—433.0 - 434.7 MHz Hong Kong
X—No RF

*Contact Lutron for frequency/channel code compatibility with your particular geographic region if it is not indicated above.

Number of Wired Inputs

4—4
X—None

Mounting Method

C—Ceiling Mount
J—Junction Box Ceiling Mount

Availability/Compatibility

Refer to the chart below to determine QSM model availability and compatibility with different sensor models.

	Radio Powr Savr Sensors		
QSM Models	Occupancy/Vacancy***	Daylight**	Pico Wireless Controls
QSM2-4W-C, QSM2-XW-C, QSM2-4W-J, QSM2-XW-J	LRF2-OCRB-P, LRF2-OHLB-P, LRF2-OKLB-P, LRF2-OWLB-P, LRF2-VHLB-P, LRF2-VKLB-P, LRF2-VWLB-P, LRF2-OCR2B-WH, LRF2-VCR2B-WH	LRF2-DCRB	MRF2-3BRL, MRF2-3B, MRF2-2BRL, MRF2-2B, QSR4P-3R, PJ-2B-Gxx-xxx, PJ-2BRL-Gxx-xxx, PJ-3B-Gxx-xxx, PJ-3BRL-Gx-xxx, PJ2-2B-Gxx-xxx, PJ2-2BRL-Gxx-xxx, PJ2-3B-Gxx-xxx, PJ2-3BRL-Gx-xxx, PJ2-4B-Gxx-xxxx
QSM3-4W-C, QSM3-XW-C	LRF3-OCRB-P	LRF3-DCRB	QSRKP-2, QSRKP-2R, QSRKP-3R
QSM4-4W-C, QSM4-XW-C	LRF4-OCRB-P	LRF4-DCRB	QSRMP-2, QSRMP-2R, QSRMP-3R
QSM5-XW-C	LRF5-OCRB-P	LRF5-DCRB	QSRNP-2, QSRNP-2R, QSRNP-3, QSRNP-3R
QSM7-4W-C, QSM7-XW-C	LRF7-OCR2B-P	LRF7-DCRB	QSRQP-2, QSRQP-2R, QSRQP-3, QSRQP-3R
QSMX-4W-C	N/A	N/A	N/A

** Daylight sensors cannot be used as part of myRoom solutions.
***Low light occupancy mode is incompatible with QSM models.

Job Name:	Model Numbers:	
Job Number:		

Specifications

QS Sensor Module (QSM)

Power

- 24 – 36 V⎓
- Maximum current draw:
  - 400 mA (models with wired input)
  - 100 mA (models without wired input)
- Power Draw Units (PDU): Refer to the QS Link Power Draw Units specification submittal (P/N 369405) for information concerning PDUs on the QS link. Use only Lutron approved power sources.
- 10-year power failure memory: restores settings and programming after power interruption.

Regulatory

- Lutron quality systems registered to ISO 9001.
- RoHS compliant
- Wireless receiver (Rx) device. Product has no wireless transmit functionality.

QSM2 –

- cUL US Listed (U.S.A. and Canada)
- FCC Compliant. Complies with the limits for a Class B digital device, persuant to Part 15 of the FCC Rules (U.S.A.).
- IC Certified. (Canada)
- SCT Certified (Mexico)

QSM3 –

- CE Marked (European Union)

QSM5 –

- WPC Type Approved (India)

QSM7 –

- FCC Compliant. Complies with the limits for a Class B digital device, persuant to Part 15 of the FCC Rules (U.S.A.).

Environment

- Ambient Temperature Operating Range: 32 °F to 104 °F (0 °C to 40 °C).
- Relative humidity: less than 90% non-condensing.
- For indoor use only.

Terminals

- Input wiring: 22 AWG to 12 AWG (0.5 mm^2 to 4.0 mm^2)
- QS link wiring: 22 AWG to 12 AWG (0.5 mm^2 to 4.0 mm^2)

Mounting

- QSM units should be mounted in the middle of non-metal ceiling tile or drywall, visible from inside the space.
- Installation near metal other than a junction box may reduce RF range.

Wireless Communication (models with wireless inputs only)

- RF Range: 60 ft (18 m) line of sight or 30 ft (9 m) through typical construction materials.
- To ensure optimal wireless range, install the QSM in the ceiling in a visible position from inside the space.
- Radio Powr Savr occupancy/vacancy sensor (up to 10)
- Radio Powr Savr daylight sensor (up to 10)
- Pico wireless control (up to 10)

Wired Inputs

- There are 4 universal wired inputs. Each input can accept one of the following:
  - EcoSystem wallstation (CC- series)
  - Occupancy sensor (LOS- series)
  - Daylight sensor (EC-DIR- series)
  - EcoSystem IR receiver (EC-IR or EC-DIR- series)
  - Wired Pico control (PX- series)
- Use of both the infrared receiver and daylight sensor on the EC-DIR- series sensors is considered two wired inputs on a QSM
- Maximum wiring distance = 150 ft (46 m)
- Only wired (LOS- series) and wireless occupancy/vacancy sensors may be used in myRoom; no Ecosystem wallstations, daylight sensors, Ecosystem IR receivers or wired Pico controls

QS Link Limits

- The QS link can have up to 100 devices.
- Each QSM counts as 1 device towards the 100 device limit.
- Each QSM draws 3 Power Draw Units (PDUs) on the QS link.
- Wired sensors add to the PDU draw of a QSM. Refer to the QS Link Power Draw Units specification submittal (P/N 369405) for information concerning PDUs.
- QS link maximum wire run length is 2000 ft (610 m).
- See the commercial system rules spec (P/N 369821) for system specific limitations.

Job Name:	Model Numbers:	
Job Number:		

Mechanical Dimensions (All Models)

Front View

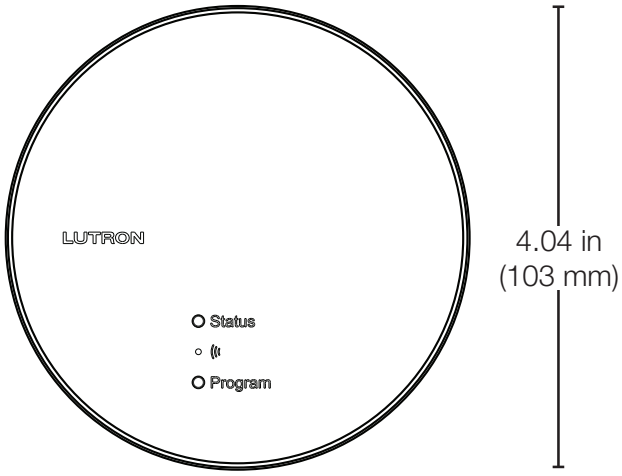

Side View

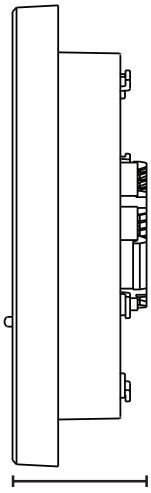

Back View

(QSM2-4W-C shown)

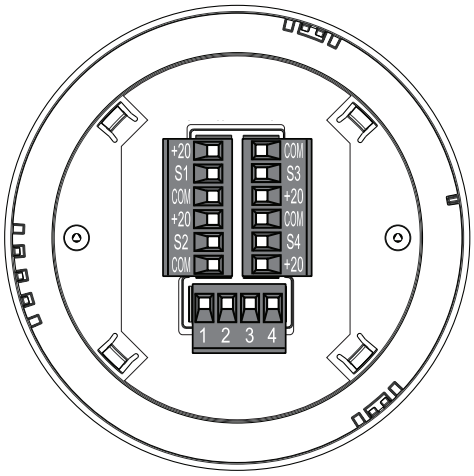

Mounted (-C Models)

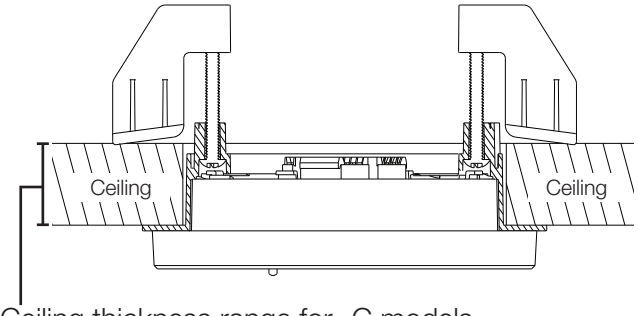

Ceiling thickness range for -C models
Minimum 0.30 in (8 mm)
to
Maximum 1.20 in (30 mm)

Mounted (-J Models)

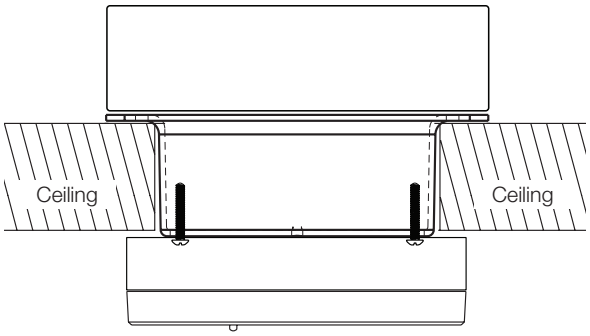

Use appropriate mud ring for ceiling tile thickness. Do not allow the tile to carry the weight of the junction box.

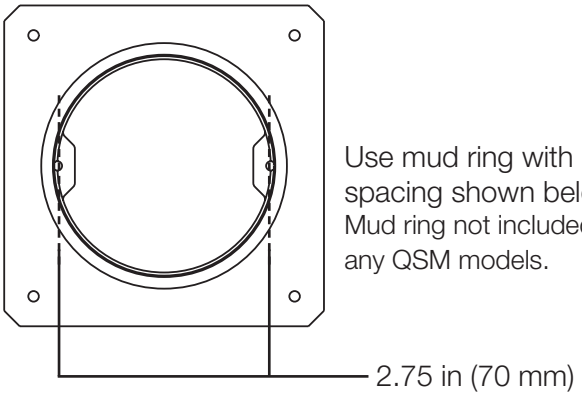

Use mud ring with hole spacing shown below. Mud ring not included with any QSM models.

Job Name:	Model Numbers:	
Job Number:		

Wiring: QS Link and Wired Inputs[1]

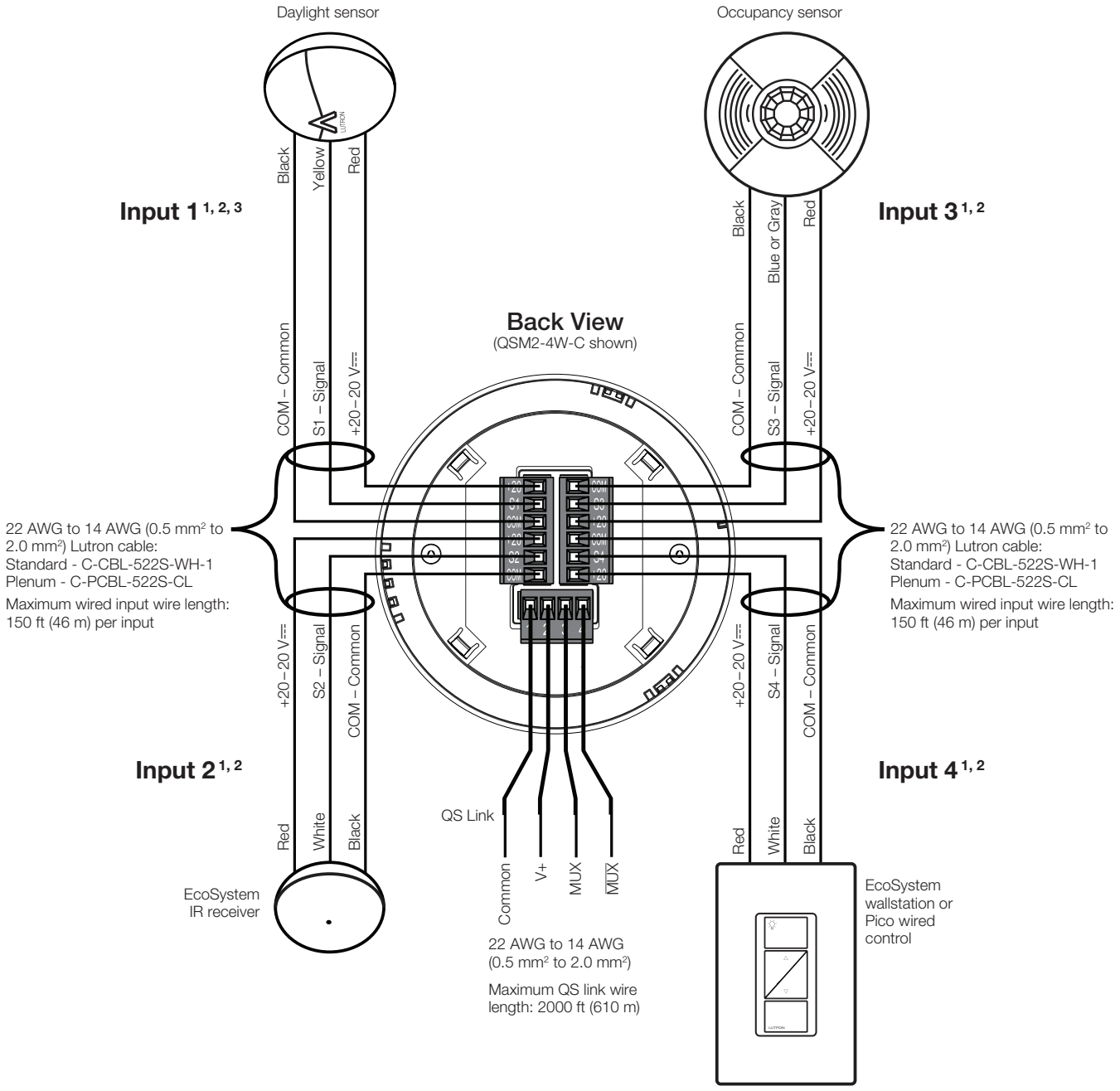

[1] Only on QSM models with wired inputs.
[2] For reference only. Each input is universal and can accept any of the inputs shown above.
[3] Only daylight sensor signal connected to QSM shown above. Use of IR signal counts as an additional input on the QSM.

Job Name:	Model Numbers:	
Job Number:		

Wiring: Device Power

Single QSM Powered by an ESN Unit

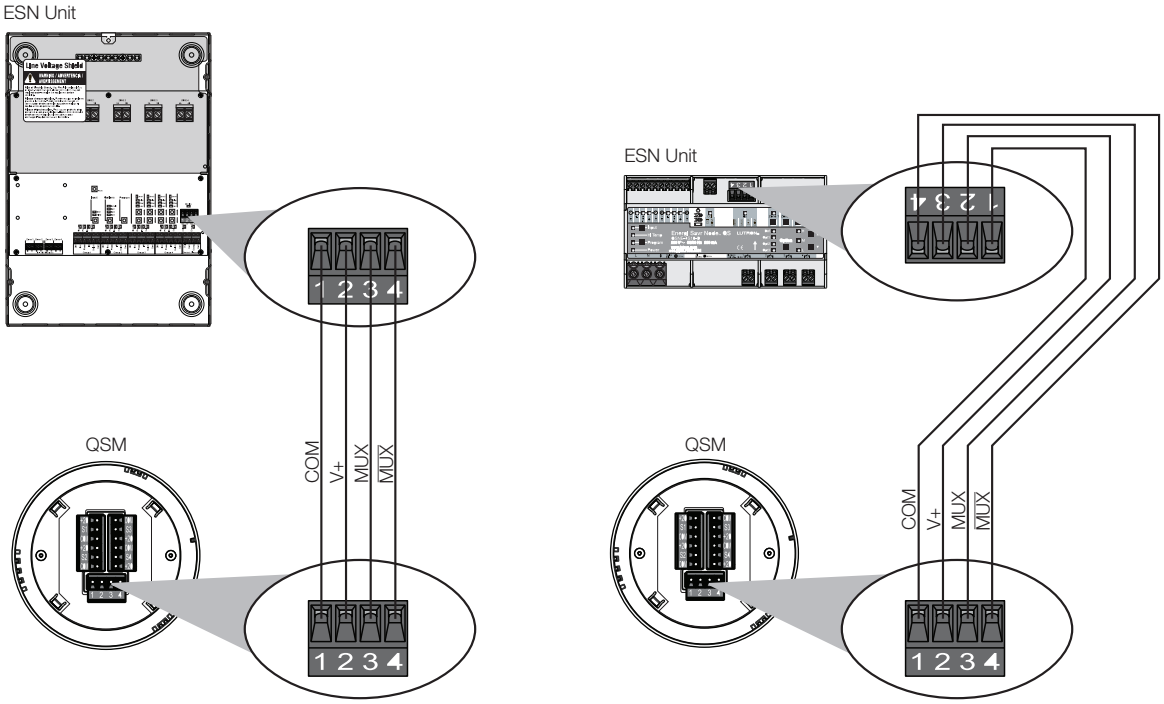

Multiple QSMs Powered by an ESN Unit and a QS Link Power Supply

A QS link power supply may be necessary if PDUs required by QSMs exceed available PDUs from the device supplying power.

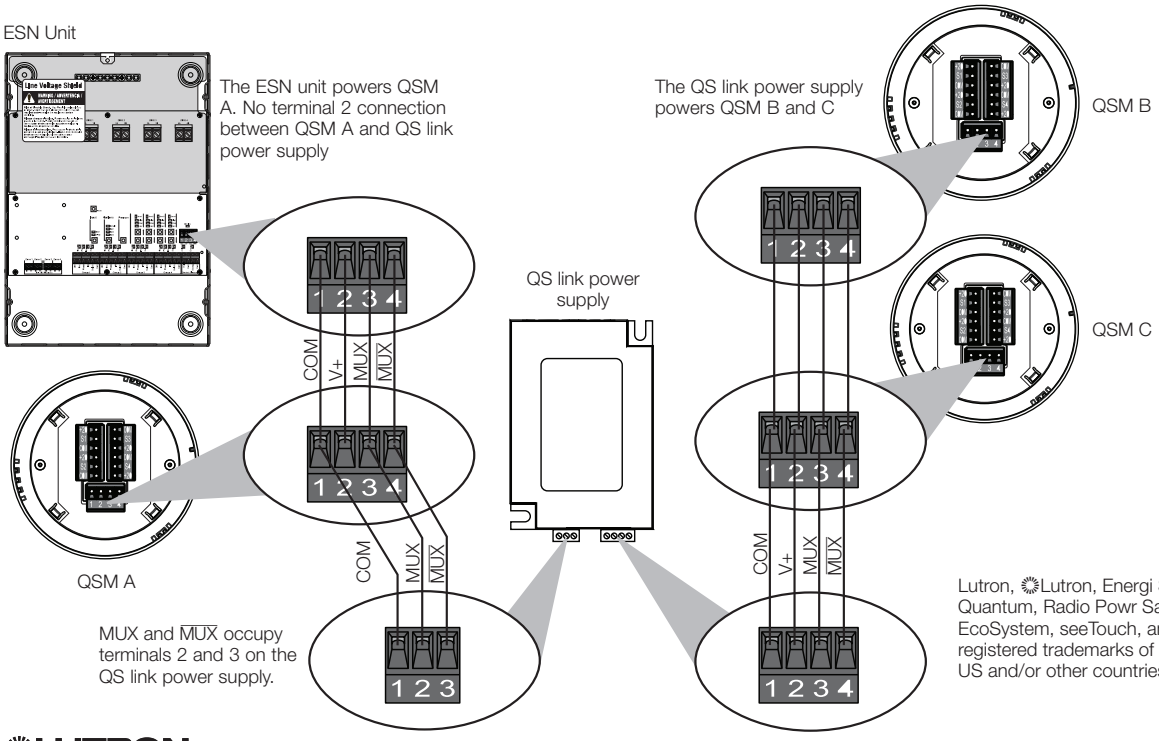

Lutron, Lutron, Energi Savr Node, GRAFIK Eye, myRoom, Quantum, Radio Powr Savr, Sivoia, Clear Connect, EcoSystem, seeTouch, and Pico are trademarks or registered trademarks of Lutron Electronics Co., Inc. in the US and/or other countries.

Job Name:	Model Numbers:	
Job Number:		

369612p 1 02.26.2021

Pico Wireless Control (for North, Central, and South America)

The Pico wireless control is a flexible and easy to use device that allows the user to control Lutron wireless load-control devices from anywhere in the space. This battery-operated control requires no external power or communication wiring.

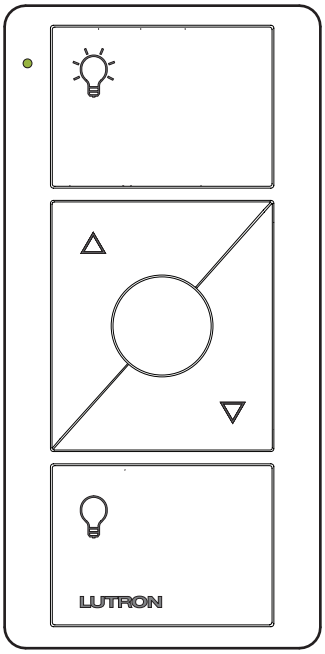

Pico wireless control [1]

Features

- Provides control for the following:
  - Caséta Wireless controls
  - Energi Savr Node, Quantum, and myRoom systems, through the use of a QS sensor module (QSM)
  - Vive systems, including:
    - Maestro Wireless controls
    - PowPak modules
  - GRAFIK Eye QS wireless systems
  - HomeWorks QS wireless systems
  - Maestro Wireless controls
  - PowPak modules
  - RadioRA 2 systems
  - Serena RF remote control shades
  - Sivoia QS wireless systems
- Control available in a variety of button marking options.
- Control available in Gloss and Satin Colors finishes.
- Easy reconfiguration for use as:
  - Handheld remote
  - Wall-mount control (with or without faceplate; faceplate adapter kit sold separately)
  - Car visor control (car visor clip sold separately)
  - A table top control (table top pedestal sold separately).
- Battery-powered. Requires no wiring.
- 10 year battery life [2] (one CR2032 battery included).
- Can provide control of blinds, curtains, or lighting devices within a range of 30 ft (9 m) through walls and 60 ft (18 m) line-of-sight.
- BAA-compliant model numbers available in gloss only. [3]
- BAA-compliant Pico kit includes Pico wallplate adapter. [3]

[1] Button markings for Lights shown. Shade printing also available.

[2] Based on a 1 year shelf life, an average of 10 button presses per day, and an ambient temperature of 86 °F (30 °C). Actual life may vary based on usage and environmental conditions.

[3] For a complete list of BAA/TAA compliant products please visit our website at Lutron.com/BAA and select “Download BAA Product List”.

Job Name:	Model Numbers:	
Job Number:		

Specifications

Regulatory Approvals

- Lutron Quality Systems registered to ISO 9001:2015.
- cULus
- FCC Certified (U.S.A.)
- IC Certified (Canada)
- COFETEL Certified (Mexico)
- SUTEL Certified (Costa Rica)
- Anatel Certified (Brazil)

Power

- Operating Voltage 3 V⎓
- (1) CR2032 Battery (included)

System Communication and Capacity

- Communicates using Radio Frequency (RF) at 431 MHz to 437 MHz.
- Thousands of system addresses prevent interference between systems.
- Can be assigned to control blinds, curtains or lighting devices that are within a 30 ft (9 m) range.
- Can be configured as a scene or zone control in GRAFIK Eye QS wireless applications.

Mounting Considerations

- All RF devices should be mounted on nonmetallic surfaces to ensure proper performance.
- If you wish to mount your Pico wireless control to a metallic surface, the PICO-MOUNT-1-XX-CPN6774 will be required in order to maintain proper RF performance. For availability, please contact your local Lutron sales office.

Environment

- Ambient operating temperature: 32 ˚F to 140 ˚F (0 ˚C to 60 ˚C)
- Maximum 90% non-condensing relative humidity
- Indoor use only

Warranty

- 1 Year Limited Warranty
  For additional Warranty information, please visit www.lutron.com/TechnicalDocumentLibrary/369-119_Wallbox_Warranty.pdf

Job Name:	Model Numbers:	
Job Number:		

Pico Wireless Control Dimensions

Measurements shown as: in (mm)

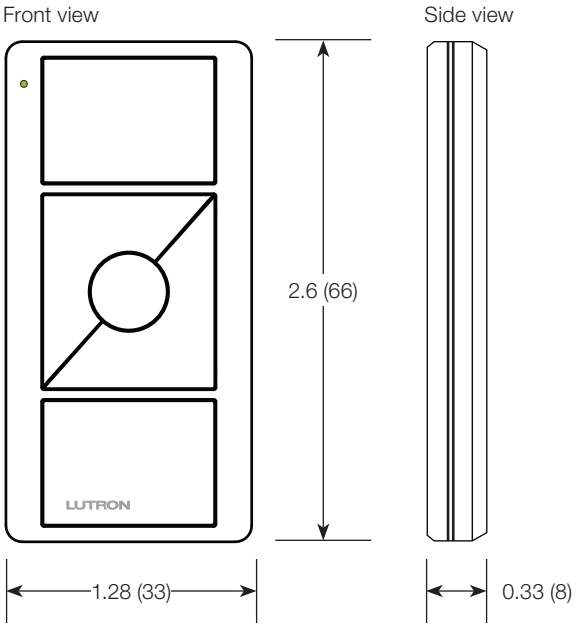

Operation

2 Button Controls (2B)

Lights Models: **L01**

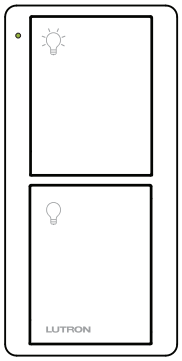

ON Button
Lights go to full intensity.

OFF Button
Lights go to off.

Appliance Model: **L02**

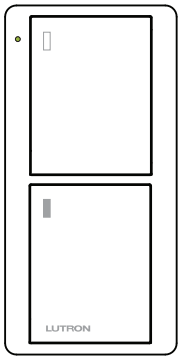

ON Button
Appliance is turned ON.

OFF Button
Appliance is turned OFF.

Screens Model: **S08**

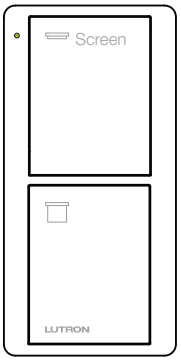

OPEN Button
Screens go to open limit.

CLOSE Button
Screens go to close limit.

2 Button Controls with Raise/Lower (2BRL)

Lights Model: **L01**

RAISE Button
Lights increase in intensity.

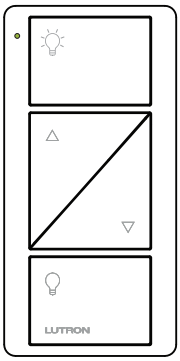

ON Button
Lights brighten to full intensity.

LOWER Button
Lights decrease in intensity.

OFF Button
Lights dim to off.

Shades Model: **S01**

RAISE Button
Shades move toward open limit.

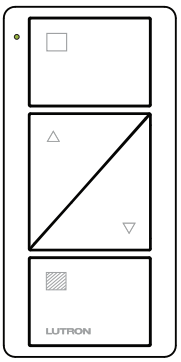

OPEN Button
Shades go to open limit.

LOWER Button
Shades move toward close limit.

CLOSED Button
Shades go to close limit.

(continued on next page…)

Job Name:	Model Numbers:	
Job Number:		

Operation (continued)

3 Button Controls (3B)

Lights Model: **L01**

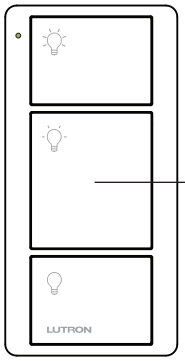

ON Button
Lights brighten to full intensity.

PRESET Button
Tap once: Sends device to preset levels or positions.

OFF Button
Lights dim to off.

3 Button Controls with Raise/Lower (3BRL)

Lights Models: **L01**

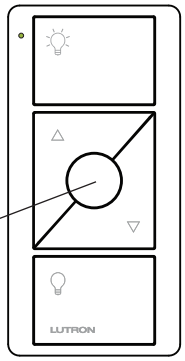

ON Button
Lights brighten to full intensity.

RAISE Button
Lights increase in intensity.

LOWER Button
Lights decrease in intensity.

PRESET Button
Tap once: Sends device to preset levels or positions.

OFF Button
Lights dim to off.

Shades Models: **S01**, **S02**, **S03**, **S04**, **S06**, **S07**

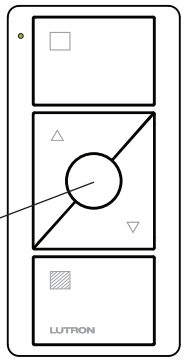

OPEN Button
Shades go to open limit.

RAISE Button
Shades move toward open limit.

LOWER Button
Shades move toward close limit.

PRESET Button
Tap once: Sends device to preset levels or positions.

CLOSED Button
Shades go to close limit.

3 Button Controls with Raise/Lower (3BRL)

Blind Models: **S05, S10**

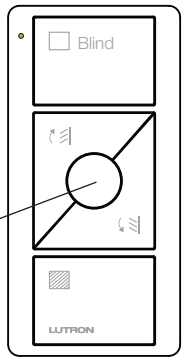

OPEN Button
Blinds go to open limit/view preset.

TILT UP Button
Slats tilt upward.

TILT DOWN Button
Slats tilt downward.

PRESET Button
Tap once: Sends device to preset levels or positions.

CLOSED Button
Blinds go to close limit.

Horizontal Sheer Blinds Model: **S09**

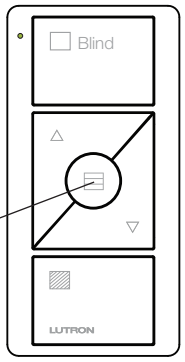

OPEN Button
Blinds go to open limit.

RAISE Button
Blinds move toward open limit.

LOWER Button
Blinds move toward close limit.

PRESET Button
Toggles between View position and Privacy position.

CLOSED Button
Blinds go to close limit.

Job Name:	Model Numbers:	
Job Number:		

Pico Wireless Control Model Number

For order quantities of 96 pieces or greater of the same model number, bulk packaging may be available. Mounting hardware is not available with bulk packaging. Contact your local Lutron sales office.

PJ2 – XXXX – XXX – XXX

Button Marking Code (next page)

Frequency/Channel Code*

Code	Frequency Range
J	431.0 — 437.0 MHz

* For questions about frequency/channel code compatibility, contact your local Lutron sales office or visit us at www.lutron.com

Button Configuration Codes

Code	Button Configuration
2B	2 Button
2BRL	2 Button with Raise/Lower
3B	3 Button
3BRL	3 Button with Raise/Lower

Color/Finish Codes

Color	Finish	
	Gloss	Texture (Satin Colors)
White	GWH	TSW
Black	GBL	TMN
Ivory	GIV	–
Light Almond	GLA	–
Biscuit	–	TBI
White/Gray[1]	GWG	–

1 Top and Raise buttons are White; Preset, Lower, and Bottom buttons are Gray

(continued on next page…)

Job Name:

Job Number:

Model Numbers:

Pico Wireless Control Model Number (continued)

PJ2 – XXXX – XXX – XXX

- PJ2: Frequency/Channel Code (previous page)
- XXXX: Button Configuration Code (previous page)
- XXX: Color/Finish Code (previous page)
- XXX: Button Marking Codes

Button Marking Codes

2 Button

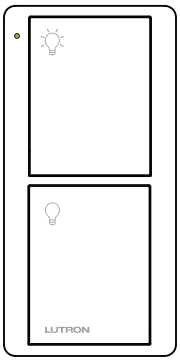

L01: Lights (icons only)

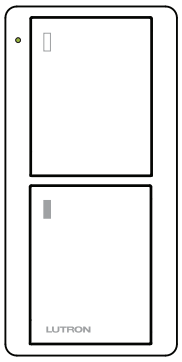

L02: Appliances (icons only)

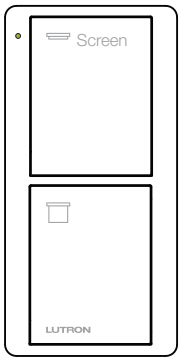

S08: Screens (icons + text)

2 Button with Raise/Lower

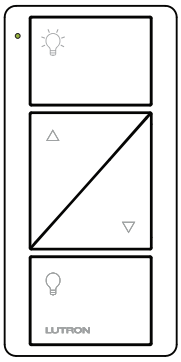

L01: Lights (icons only)

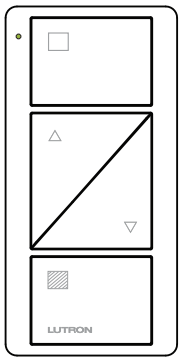

S01: Shades (icons only)

3 Button

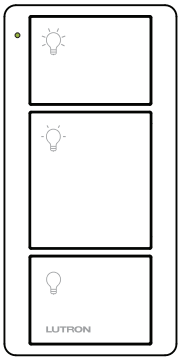

L01: Lights (icons only)

3 Button with Raise/Lower

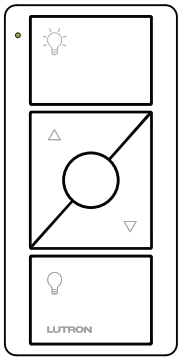

L01*: Lights (icons only)

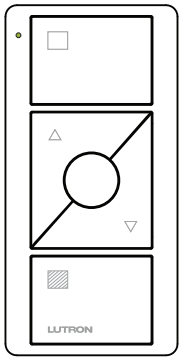

S01: Shades (icons only)

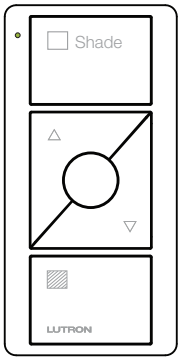

S02: Shades (icons + text)

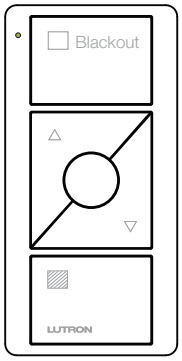

S03: Blackouts (icons + text)

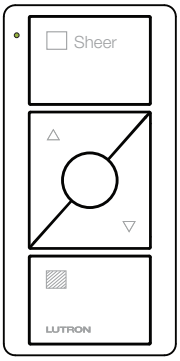

S04: Sheers (icons + text)

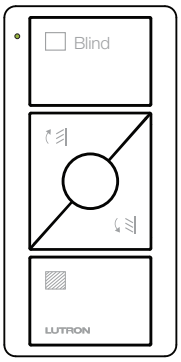

S05: Blinds (icons + text)

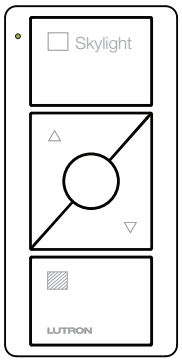

S06: Skylights (icons + text)

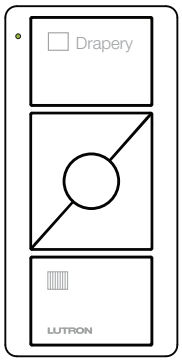

S07: Draperies (icons + text)

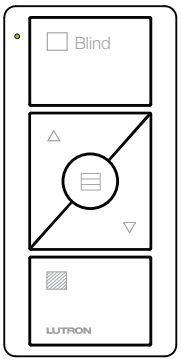

S09: Horizontal Sheer Blinds (icons + text)

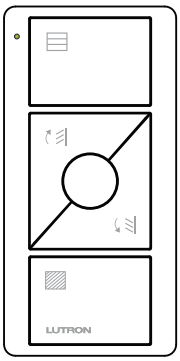

S10: Tilt Blinds (icons only)

* Add "R" after "L01" in the model number for Caséta wireless retail packaging. Available in Gloss White (WH) or Light Almond (LA).

Job Name:	Model Numbers:	
Job Number:		

369612p 8 02.26.2021

Pico Wireless Control Model Number (BAA Compliant)

For order quantities of 96 pieces or greater of the same model number, bulk packaging may be available. Mounting hardware is not available with bulk packaging. Contact your local Lutron sales office.

UPJ2 – XXXX – XX – L01

Frequency/Channel Codes*

Code	Frequency Range
J	431.0 — 437.0 MHz

* For questions about frequency/channel code compatibility, contact your local Lutron sales office or visit us at www.lutron.com

Button Configuration Codes

Code	Button Configuration
2B	2 Button
2BRL	2 Button with Raise/Lower
3B	3 Button
3BRL	3 Button with Raise/Lower

Color Codes

Color	Code
	Gloss[1]
White	WH
Black	BL
Ivory	IV
Light Almond	LA
White/Gray[2]	WG

1 BAA controls are available in Gloss finish only. For a complete list of BAA/TAA compliant products please visit our website at Lutron.com/BAA and select "Download BAA Product List".

2 Top and Raise buttons are White; Preset, Lower, and Bottom buttons are Gray

Button Marking Codes

2 Button

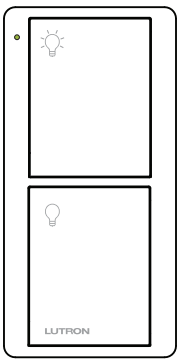

L01: Lights (icons only)

2 Button with Raise/Lower

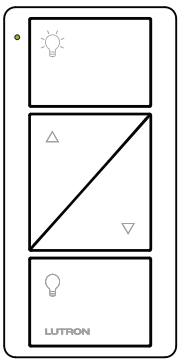

L01: Lights (icons only)

3 Button

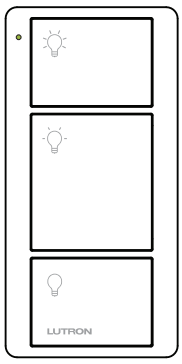

L01: Lights (icons only)

3 Button with Raise/Lower

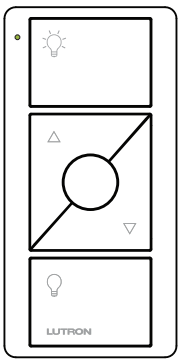

L01: Lights (icons only)

Job Name:	Model Numbers:	
Job Number:		

Pico Pedestal Model Number

Pedestals sold separately. Available in gloss finish only

L – PEDX – XX

Capacity Codes

Capacity	Code
Single	1
Double	2
Triple	3

Color Codes

Color*	Code
White	WH
Black	BL

* Available in gloss finish only.

Pico Pedestal Dimensions

Measurements shown as: in (mm)

Single Pedestal

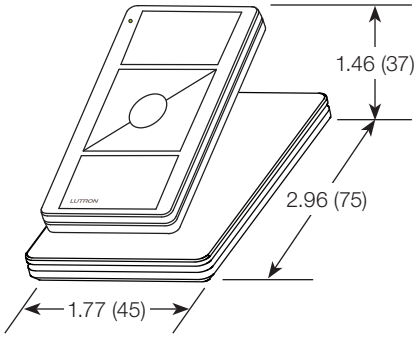

Double Pedestal

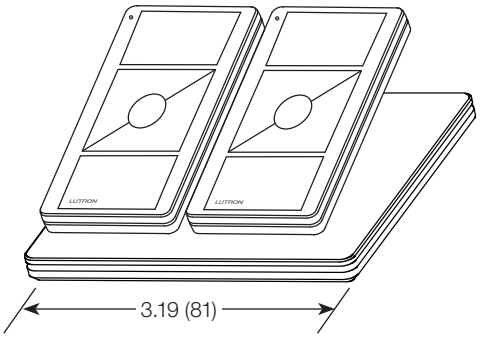

Triple Pedestal[1]

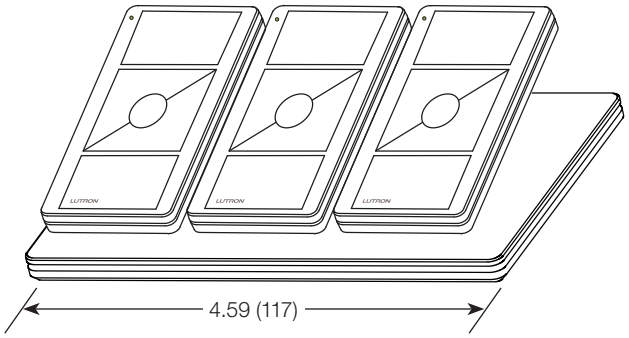

[1] For Triple Pedestals contact your local Lutron sales office or visit us at www.lutron.com

Job Name:	Model Numbers:	
Job Number:		

Mounting Options

Standalone Mounting

Adhesive Mounting

Included with Pico wireless control

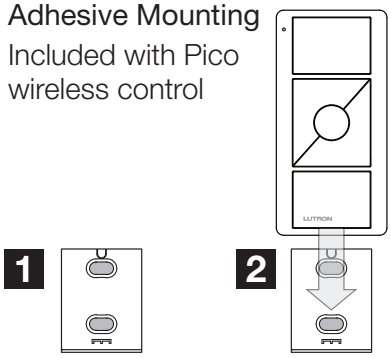

Screw Mounting

Model: PICO-SM-KIT (sold separately)

Kit includes special screws to be used for more permanent mounting and/or for non-smooth surfaces.

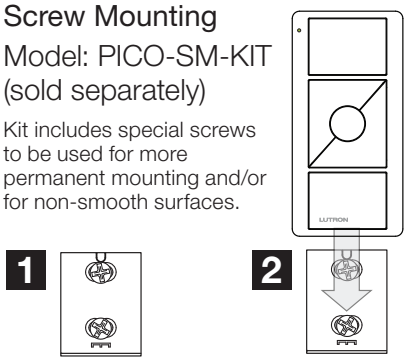

Metal Surface Mounting

Model: PICO-MOUNT-1-XX-CPN6774 (sold separately)

Contact your local Lutron sales office.

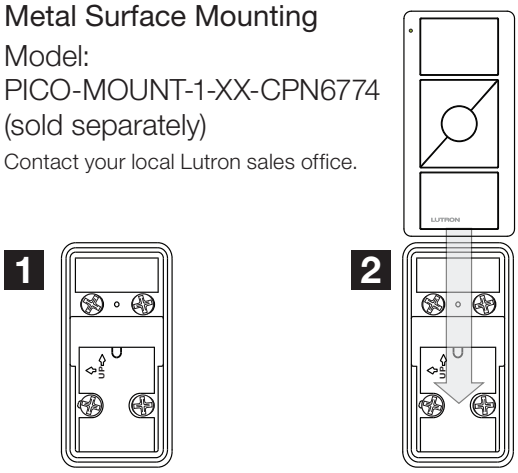

Wallbox Mounting

Wallbox Adapter

Model: PICO-WBX-ADAPT (sold separately)

Wallplate adapter/wallplate sold separately.

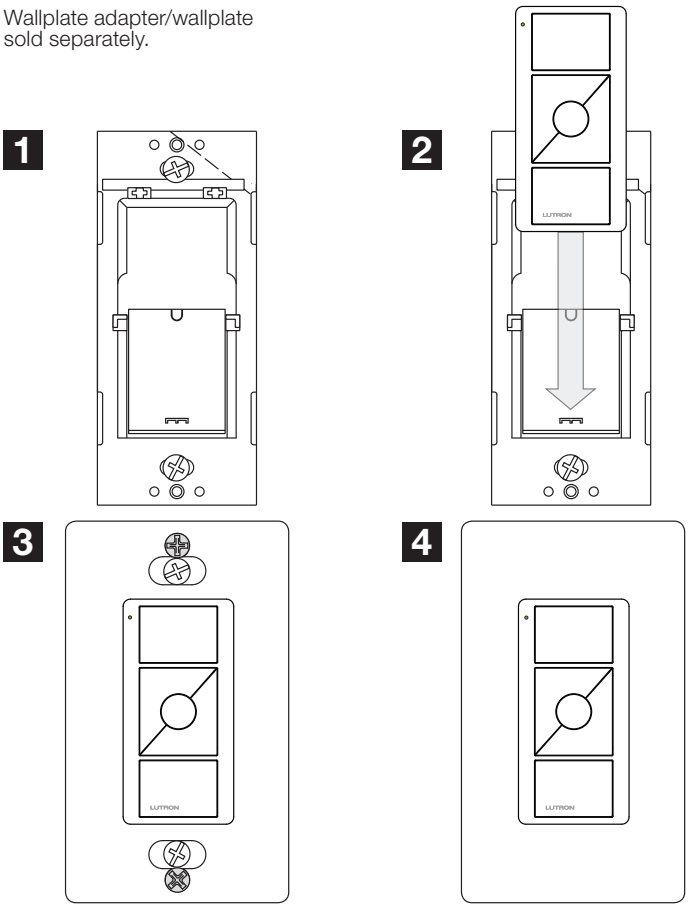

Surface Mounting Kits

Wall-Mounting Kit

Model: PJ2-WALL-WH-L01; PJ2-WALL-WH-L01C*
(sold separately)

Kit includes:

- Pico wireless control
- Claro wallplate (with wallplate adapter)
- Wallbox adapter

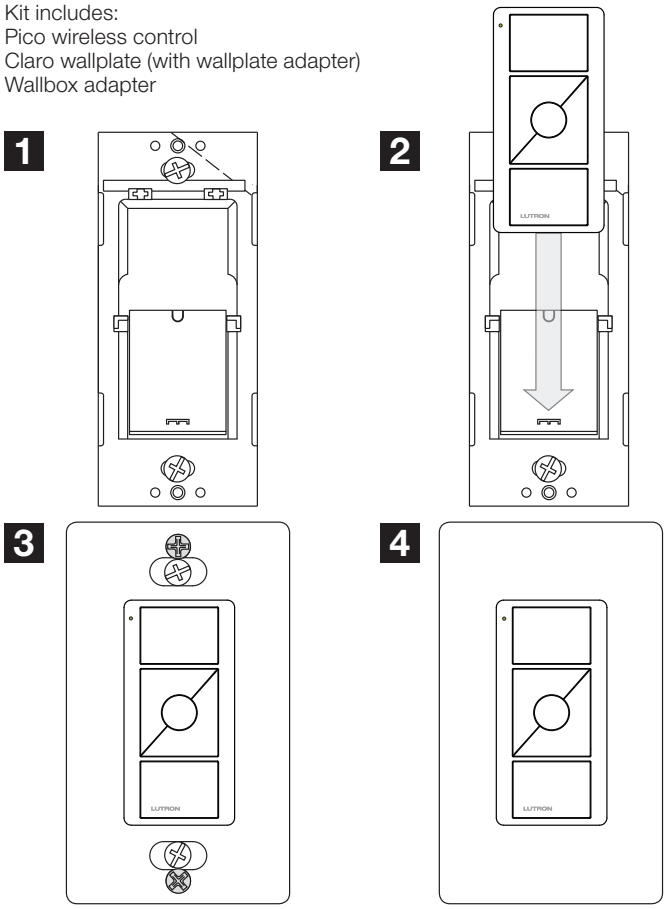

* Canadian packaged product.

Job Name:	Model Numbers:	
Job Number:		

Mounting Options (continued)

Surface Mounting Kits (continued)

Wall-Mounting Kit (BAA Compliant)*

Model: UPJ2-XXXX-XX-L01
(sold separately)

Kit includes:
- Pico wireless control
- Wallbox adapter

1

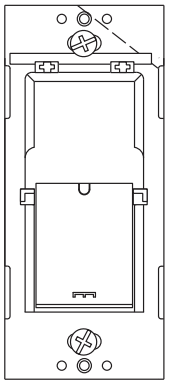

2

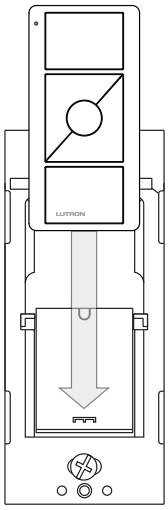

* For a complete list of BAA/TAA compliant products please visit our website at Lutron.com/BAA and select “Download BAA Product List”.

Vehicle Mounting

Mounting to a Car Visor

Model: PICO-CARVISOR-CL
(sold separately)

1

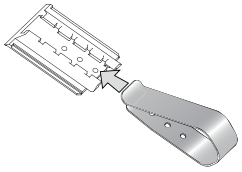

2

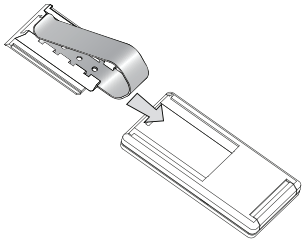

3

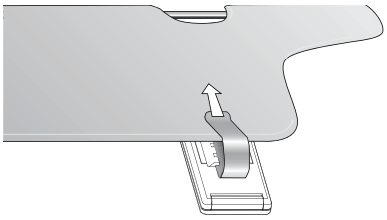

The Lutron logo, Lutron, Pico, Caséta, Quantum, Maestro, Maestro Wireless, myRoom, Energi Savr Node, Vive, PowPak, GRAFIK Eye, RadioRA, Satin Colors, Serena, Sivoia, HomeWorks, Claro, and the design of the Pico remote are trademarks or registered trademarks of Lutron Electronics Co., Inc. in the US and/or other countries.

Job Name:	Model Numbers:	
Job Number:		

369847j 1 09.19.2018

Pico 4-Button Wireless Remote

The Pico wireless remote is a flexible and easy to use device that allows the user to control Lutron wireless load-control devices from anywhere in the space. This battery-operated control requires no external power or communication wiring.

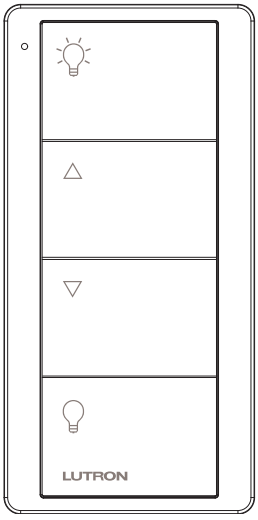

Pico 4-Button Wireless Remote[1]

Features

- Provides control for the following:
  - Energi Savr Node systems programmed with handheld App, through the use of a QS sensor module (QSM)
  - Vive systems, including:
    - Maestro Wireless controls
    - PowPak relay module, CCO module, and 0–10 V⎓ (EcoSystem module not available)
  - GRAFIK Eye QS wireless systems
  - HomeWorks QS wireless systems
  - RadioRA 2 systems
  - RA2 Select systems
  - Serena RF remote control shades
  - Sivoia QS wireless systems
  - Caséta Wireless controls
  - Quantum systems, through the use of a QS sensor module (QSM)
  - myRoom prime and plus systems
- Custom engraving options.
- Control available in a variety of button marking options.
- Control available in Gloss and Satin Colors finishes.
- Easy reconfiguration for use as:
  - Handheld remote
  - Wall-mount control (with or without faceplate; faceplate adapter kit sold separately)
  - Car visor control (car visor clip sold separately)
  - Table-top control (table-top pedestal sold separately)
- Utilizes Lutron reliable Clear Connect RF technology.
- Battery-powered. Requires no wiring.
- 10 year battery life[2] (one CR2032 battery included).
- Can provide control of shades, drapes, or lighting devices within a range of 30 ft (9 m) through walls and 60 ft (18 m) line-of-sight.

[1] Lights zone control printing shown.

[2] Based on a 1 year shelf life, an average of 10 button presses per day, and an ambient temperature of 86 °F (30 °C). Actual life may vary based on usage and environmental conditions.

Job Name:	Model Numbers:	
Job Number:		

Specifications

Regulatory Approvals

- Lutron Quality Systems registered to ISO 9001.
- FCC Certified (U.S.A.)
- IC Certified (Canada)
- COFETEL Certified (Mexico)
- SUTEL Certified (Costa Rica)
- Anatel Certified (Brazil)

Power

- Operating Voltage 3 V⎓
- (1) CR2032 battery (included)

System Communication and Capacity

- Communicates using Radio Frequency (RF) at 431 MHz to 437 MHz.
- Thousands of system addresses prevent interference between systems.
- Can be assigned to control shades, drapes, or lighting devices within a range of 30 ft (9 m) through walls and 60 ft (18 m) line-of-sight.

Mounting Considerations

- All RF devices should be mounted on nonmetallic surfaces to ensure proper performance.
- If you wish to mount your Pico wireless remote to a metallic surface, the PICO-MOUNT-1-XX-CPN6774 will be required in order to maintain proper RF performance. For availability, please contact your local Lutron sales office.

Environment

- Ambient operating temperature: 32 °F to 140 °F (0 °C to 60 °C)
- Maximum 90% non-condensing relative humidity
- Indoor use only

Warranty

- 1 Year Limited Warranty. For additional Warranty information, please visit www.lutron.com/TechnicalDocumentLibrary/369-119_Wallbox_Warranty.pdf

Job Name:	Model Numbers:	
Job Number:		

Dimensions

Measurements shown as: in (mm)

Front view

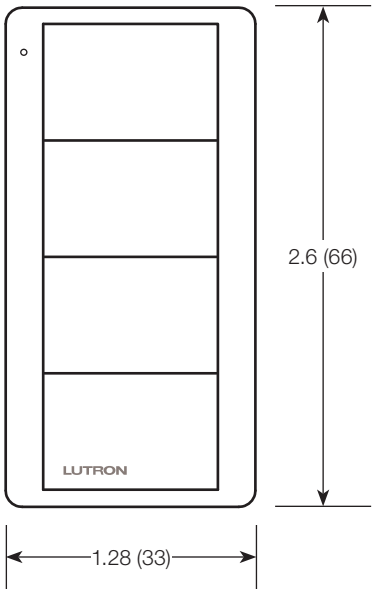

Side view

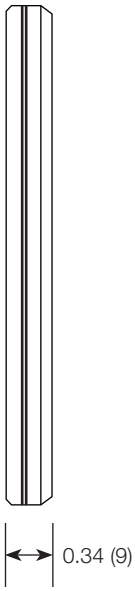

Operation

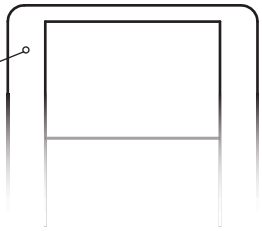

Indicator LED
Flashes to indicate a button press or when unit is in programming mode.

Zone Controls

Lights Models: L01, EL1

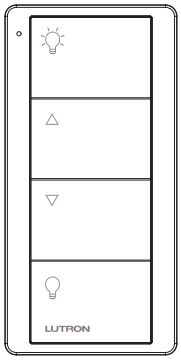

ON Button
Lights brighten to full intensity.

Raise Button
Lights increase in intensity.

Lower Button
Lights decrease in intensity.

OFF Button
Lights dim to off.

Shades Models: S01, ES1

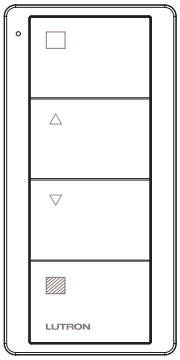

OPEN Button
Shades open fully.

Raise Button
Shades open gradually.

Lower Button
Shades close gradually.

CLOSE Button
Shades close fully.

Zone Controls (-S01, -ES1) Shade Functionality

System Type	Serena Wireless	Triathlon Wireless	Sivoia QS Wireless	Sivoia QS Wired
Standalone Pico	Yes	Yes	Yes	Yes[1]
Caséta Smart Bridge	Yes	—	—	—
Caséta Smart Bridge Pro	Yes	Yes	Yes	—
RadioRA 2	—	Yes	Yes	—
RA2 Select	—	Yes	Yes	—
HomeWorks QS	—	Yes[1]	Yes[1]	Yes[1]
Quantum systems	—	—	—	Yes[2]
myRoom prime	Yes	Yes	Yes	Yes[2]
myRoom plus	—	Yes[1]	Yes[1]	Yes[1]

1 Either a QS sensor module or a hybrid repeater is required.
2 QS sensor module required.

(continued on next page…)

Job Name:	Model Numbers:	
Job Number:		

Operation (continued)

Scene Controls (Default settings: 100%, 66%, 33%, 0)

Lights Models: L31, EL2

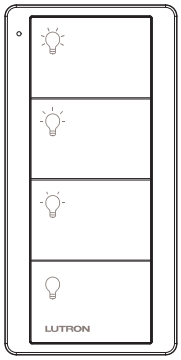

3 Scene Buttons
Tap once: Sends device to preset levels.
Press and hold for 6 seconds: Saves new preset level or position.

OFF Button
Lights dim to off.

Shades Models: S31, ES2

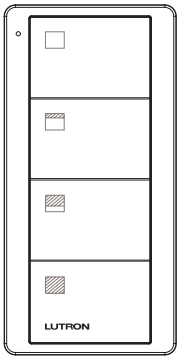

OPEN Button
Shades open fully.

2 Scene Buttons
Tap once: Sends device to preset levels.
Press and hold for 6 seconds: Saves new preset level or position.

CLOSE Button
Shades close fully.

Note: For EL2/ES2 in RA2 Select and Caséta systems, all buttons can be individually programmed to any devices and any levels using the Lutron App.

Scene Controls (-S31, -ES2) Shade Functionality

System Type	Serena Wireless	Triathlon Wireless	Sivoia QS Wireless	Sivoia QS Wired
Standalone Pico	—	—	Yes	—
Caséta Smart Bridge	Yes	—	—	—
Caséta Smart Bridge Pro	Yes	Yes	Yes	—
RadioRA 2	—	Yes	Yes	—
RA2 Select	—	Yes	Yes	—
HomeWorks QS	—	Yes [1]	Yes [1]	Yes [1]
Quantum systems	—	—	—	Yes [2]
myRoom prime	—	—	Yes	Yes [2]
myRoom plus	—	Yes [1]	Yes [1]	Yes [1]

1 Either a QS sensor module or a hybrid repeater is required.
2 QS sensor module required.

(continued on next page…)

Job Name:	Model Numbers:	
Job Number:		

Operation (continued)

2-Group Controls

Lights Model: L21

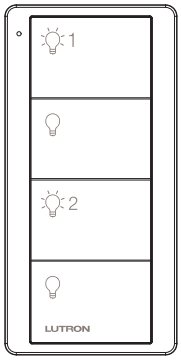

ON Button #1
Lights brighten to full intensity.

OFF Button #1
Lights dim to off.

ON Button #2
Lights brighten to full intensity.

OFF Button #2
Lights dim to off.

Shades Model: S21

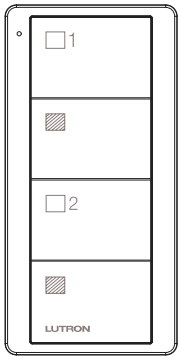

OPEN Button #1
Shades open fully.

CLOSE Button #1
Shades close fully.

OPEN Button #2
Shades open fully.

CLOSE Button #2
Shades close fully.

Lights/Shades Model: LS21

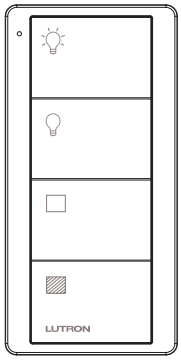

ON Button
Lights brighten to full intensity.

OFF Button
Lights dim to off.

OPEN Button
Shades open fully.

CLOSE Button
Shades close fully.

2-Group Controls (-S21, -LS21) Shade Functionality

System Type	Serena Wireless	Triathlon Wireless	Sivoia QS Wireless	Sivoia QS Wired
Standalone Pico	—	—	Yes	—
Caséta Smart Bridge	Yes	—	—	—
Caséta Smart Bridge Pro	Yes	Yes	Yes	—
RadioRA 2	—	Yes	Yes	—
RA2 Select	—	Yes	Yes	—
HomeWorks QS	—	Yes [1]	Yes [1]	Yes [1]
Quantum systems	—	—	—	Yes [2]
myRoom prime	—	—	Yes	Yes [2]
myRoom plus	—	Yes [1]	Yes [1]	Yes [1]

1 Either a QS sensor module or a hybrid repeater is required.
2 QS sensor module required.

(continued on next page…)

Job Name:	Model Numbers:	
Job Number:		

Operation (continued)

4-Group Toggle (HomeWorks QS, Quantum, and myRoom plus systems only)

Model: L41

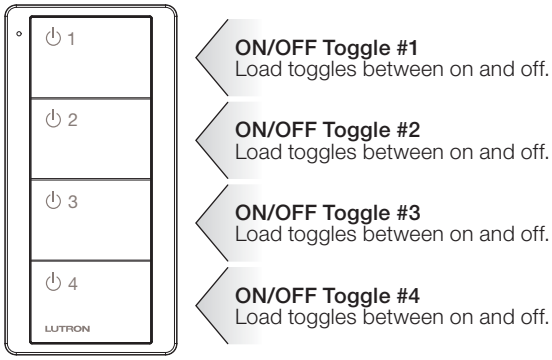

4-Group Toggle Controls (-L41) Shade Functionality

System Type	Serena Wireless	Triathlon Wireless	Sivoia QS Wireless	Sivoia QS Wired
Standalone Pico	—	—	—	—
Caséta Smart Bridge	—	—	—	—
Caséta Smart Bridge Pro	—	—	—	—
RadioRA 2	—	—	—	—
RA2 Select	—	—	—	—
HomeWorks QS	—	Yes [1]	Yes [1]	Yes [1]
Quantum systems	—	—	—	Yes [2]
myRoom prime	—	—	—	—
myRoom plus	—	Yes [1]	Yes [1]	Yes [1]

1 Either a QS sensor module or a hybrid repeater is required.
2 QS sensor module required.

Job Name:	Model Numbers:	
Job Number:		

Model Number

For order quantities of 96 pieces or greater of the same model number, bulk packaging may be available. Mounting hardware is not included with bulk packaging. For availability, please contact Lutron Customer Service at 1.844.LUTRON1 (1.844.588.7661).

Standard Icon Models

PJ2 – 4B – XXX – XXXX

- PJ2: Frequency/Channel Code
- 4B: Button Configuration Code (4-button)
- XXX: Color/Finish Code
- XXXX: Button Marking Code

Frequency/Channel Code

J: 431.0–437.0 MHz

Color/Finish Codes

Color	Finish	
	Gloss	Texture (Satin Colors)
White	GWH	TSW
Black	GBL	TMN
Ivory	GIV	–
Light Almond	GLA	–
Biscuit	–	TBI

Button Marking Codes

Zone Controls

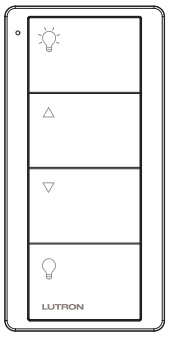

-L01*

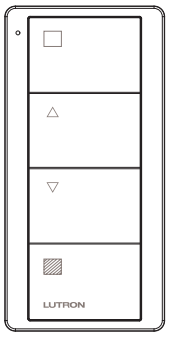

-S01

Scene Controls

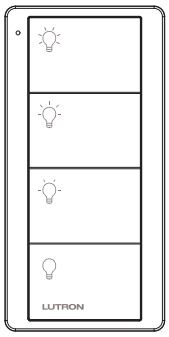

-L31*

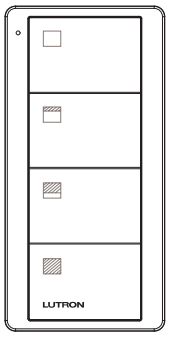

-S31

2-Group Controls

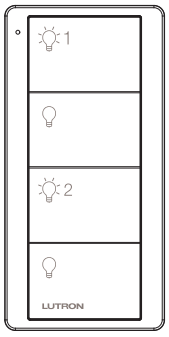

-L21*

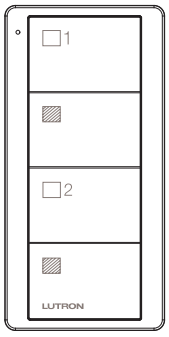

-S21

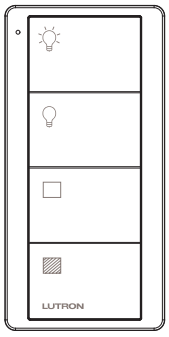

-LS21

4-Group Toggle**

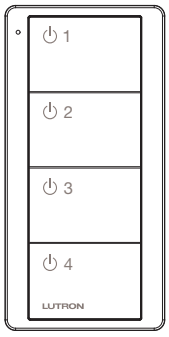

-L41

* Add "P" after the Button Marking Code in the model number for Caséta wireless PRO packaging. Available in Gloss White (WH), Black (BL), Ivory (IV), or Light Almond (LA).

** HomeWorks QS, myRoom, and Quantum systems only.

(continued on next page…)

Job Name:	Model Numbers:	
Job Number:		

Model Number (continued)

Customizable Engraving Models

Pico 4-Button wireless remote will be the first Pico product to offer customizable engraving on Zone and Scene controls for both lights and shades. The following text restrictions and button marking codes must be considered when ordering from Lutron Customer Service:

PJ2 – 4B – XXX – XXXX

- PJ2: Frequency/Channel Code
- 4B: Button Configuration Code (4-button)
- XXX: Color/Finish Code
- XXXX: Button Marking Code

Frequency/Channel Code

J: 431.0–437.0 MHz

Color/Finish Codes

Color	Finish	
	Gloss	Texture (Satin Colors)
White	GWH	TSW
Black	GBL	TMN
Ivory	GIV	–
Light Almond	GLA	–
Biscuit	–	TBI

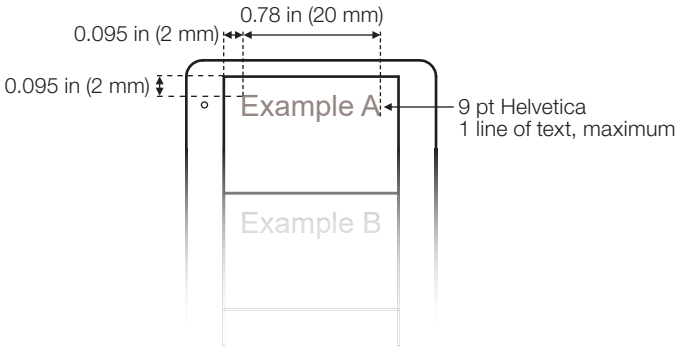

Button Marking Codes

Custom-engraved models for Zone control keypads (-L01, -S01) and Scene control keypads (-L31, -S31) are available but require a different set of button marking codes when ordering (**Note:** 2-Group [-L21, -S21, -LS21] and 4-Group Toggle [-L41] controls are not offered with the custom engraving option).

	Button Marking Codes	
	Standard Engraving	Custom Engraving
Zone Control of Lights	-L01	-EL1
Zone Control of Shades	-S01	-ES1
Scene Control of Lights	-L31	-EL2
Scene Control of Shades	-S31	-ES2

When selecting alternate labels for buttons, remember button functionality presets as shown in the **Operation** section on pages 4 and 5. The examples to the right show sample text choices:

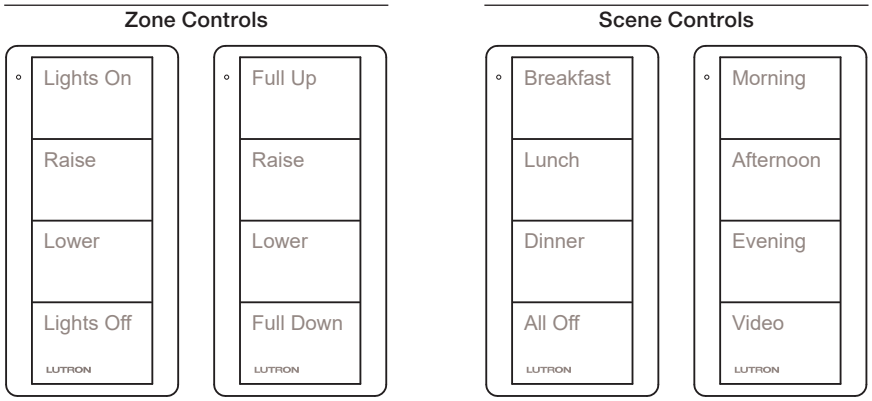

-EL1 (lights example) | -ES1 (shades example) | -EL2 (lights example) | -ES2 (shades example)

Job Name:	Model Numbers:	
Job Number:		

Pico Pedestal Model Number

Pedestals sold separately.

L – PEDX – XX

Capacity Code — Color Code

Capacity Codes

Capacity	Code
Single	1
Double	2
Triple	3

Color Codes

Available in gloss finish only.

Color	Code
White	WH
Black	BL

Dimensions

Measurements shown as: in (mm)

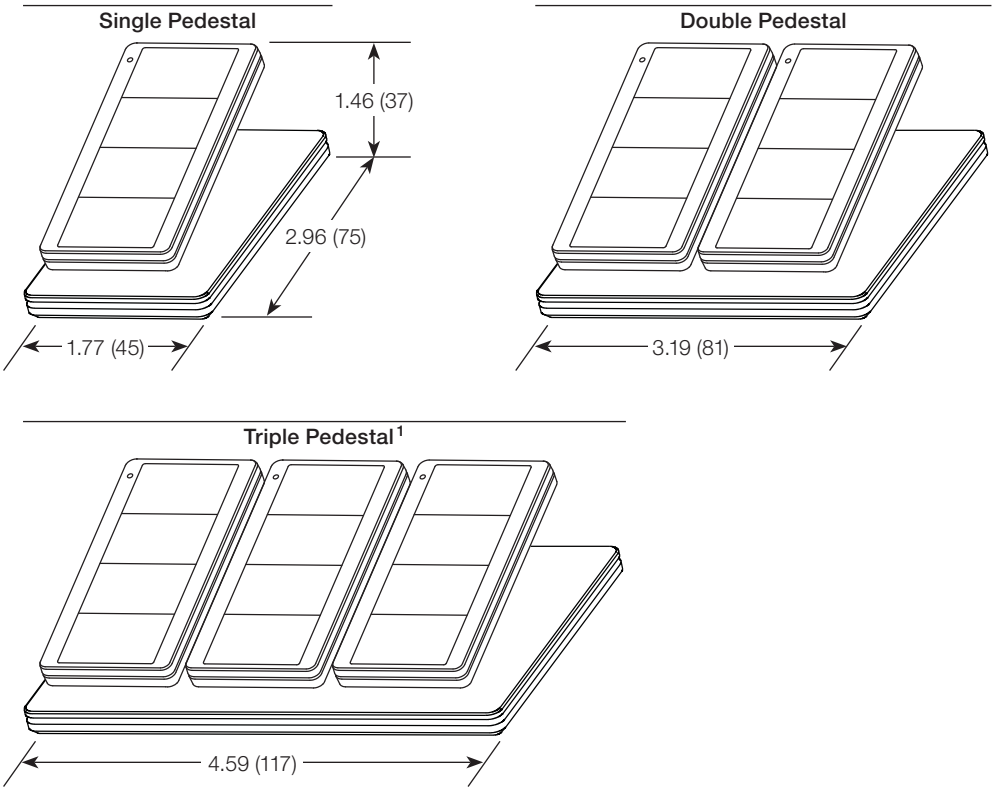

[1] For triple pedestals contact your local Lutron sales office or visit us at www.lutron.com

Job Name:	Model Numbers:	
Job Number:		

Mounting Options

Standalone Mounting: Adhesive-Mount

Included with Pico wireless remote

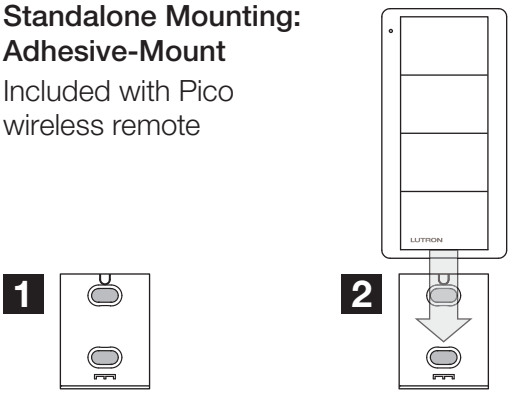

Standalone Mounting: Screw-Mount

Model PICO-SM-KIT (sold separately)

Kit includes special screws to be used for more permanent mounting and/or for non-smooth surfaces.

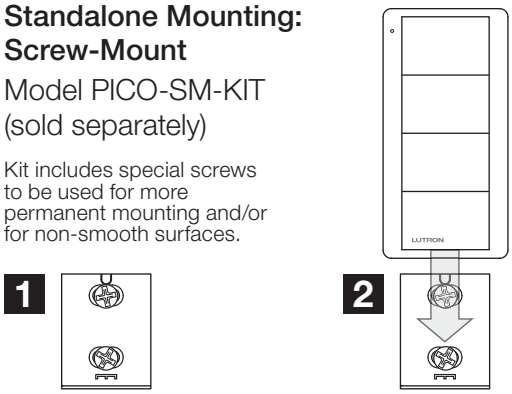

Wallbox Adapter

Model PICO-WBX-ADAPT (sold separately)

Wallplate adapter/wallplate sold separately.

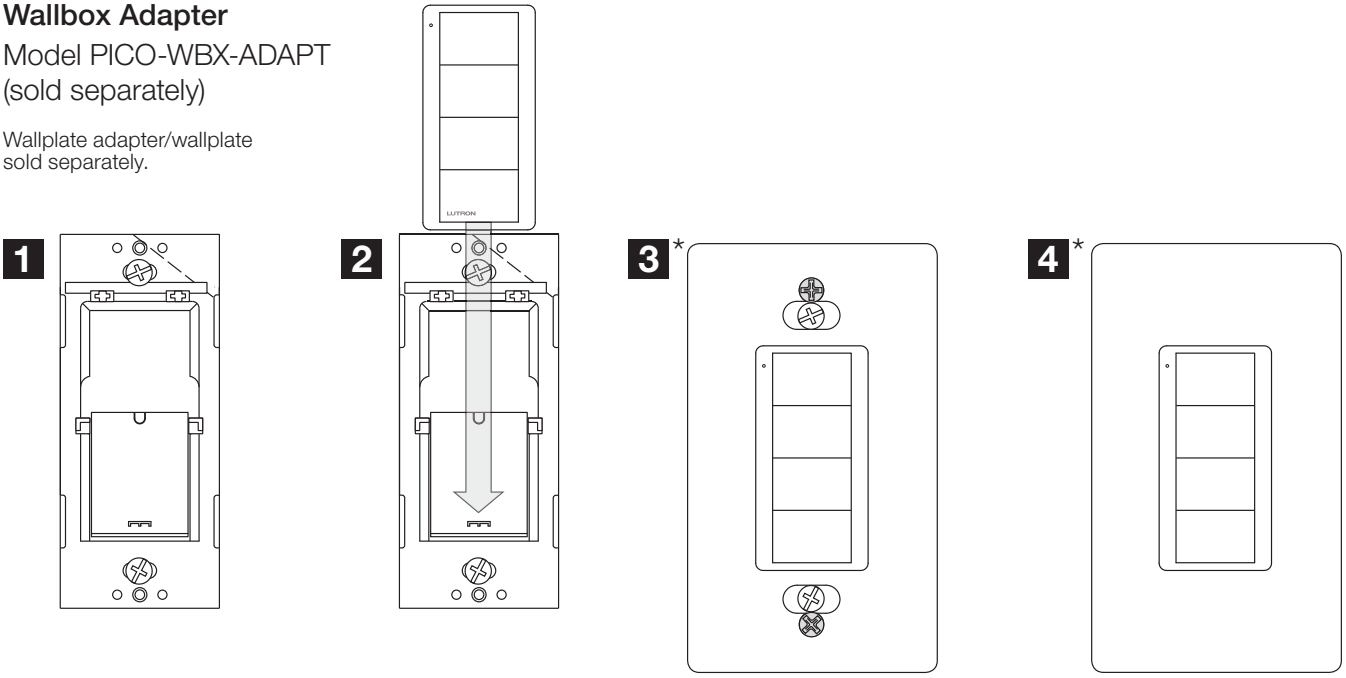

Job Name:	Model Numbers:	
Job Number:		

Mounting Options (continued)

Metal Surface Mounting

Model:
PICO-MOUNT-1-XX-CPN6774
(sold separately)

Contact your local Lutron sales office.

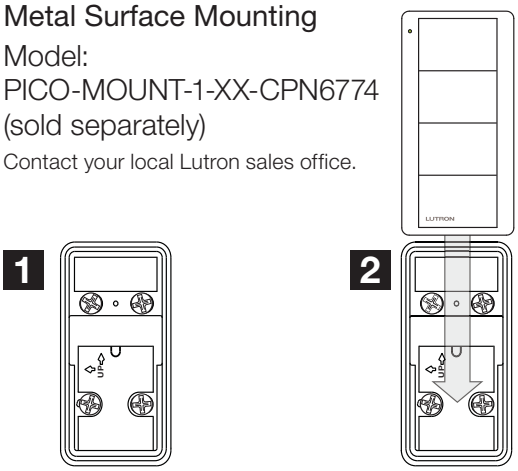

Mounting to a Car Visor

Model PICO-CARVISOR-CL (sold separately)

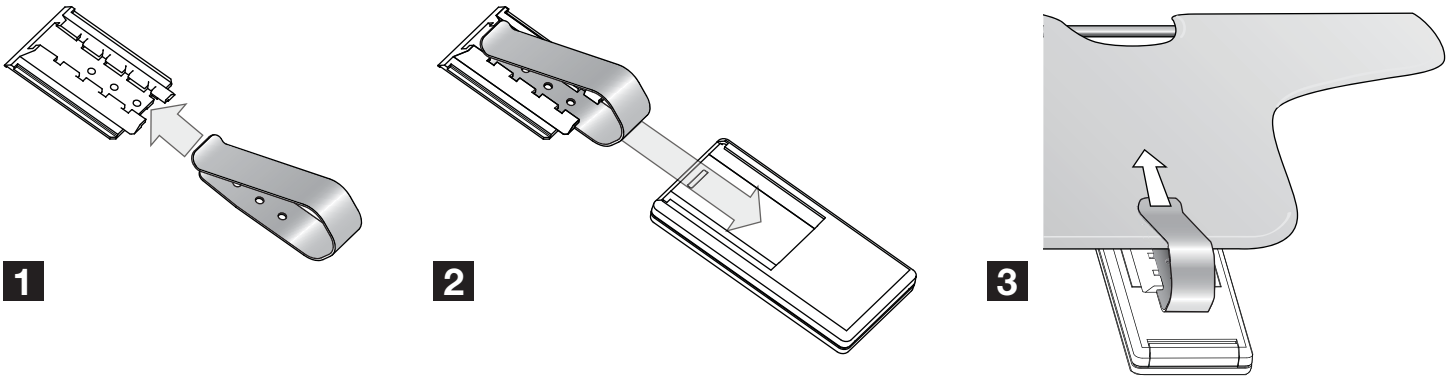

Lutron, Lutron, Pico, Caseta, Clear Connect, EcoSystem, Quantum, Maestro Wireless, PowPak, GRAFIK Eye, RadioRA, Satin Colors, Serena, Sivoia, Triathlon, and HomeWorks are trademarks of Lutron Electronics Co., Inc. registered in the U.S. and other countries.
myRoom, Energi Savr Node, Smart Bridge, and Vive are trademarks of Lutron Electronics Co., Inc.

Job Name:	Model Numbers:	
Job Number:		

Color and Engraving Codes (continued)

QSWS2-3BRLN-___-___
QSWS2-3BRLI-___-___
3-Button Wallstation with Raise/Lower

Description

- Often used to select and adjust scenes.
- Receives up to two contact closure inputs through a connector on the back of the wallstation.
- Large, rounded buttons are easy to use.
- Backlit buttons with optional engraving make it easy to find and operate the wallstation in low-light conditions.
- Optional button engraving is angled up to the eye for easy reading.
- Master Raise/Lower brightens or dims all lighting or raises/lowers all assigned shades in the last selected scene or toggled group.
- The LEDs next to each button are used during programming and provide feedback when the buttons are pressed.
- Shade control features (E01 engraving):
  - Can control Sivoia QS window treatments.
  - Pressing the Open (or Close) button once will cause the window treatments to move to their fully open (or closed) position. Tap any button (regardless of function) to stop a shade that is in motion.
  - One (1) programmable preset button.

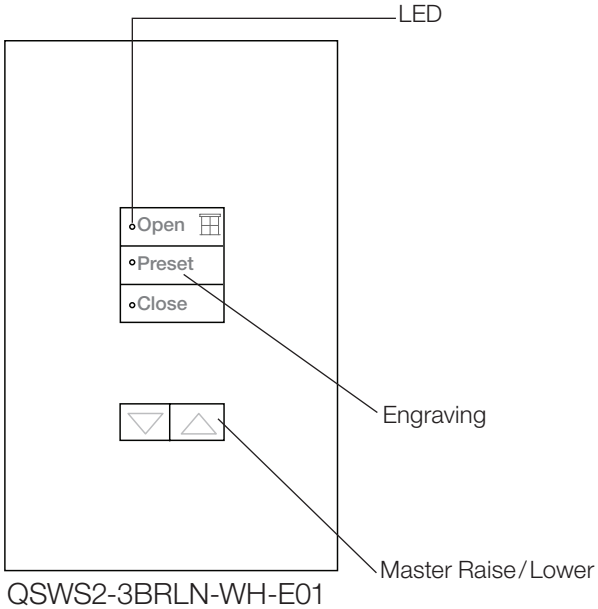

QSWS2-3BRLN-WH-E01
(Non-insert version)

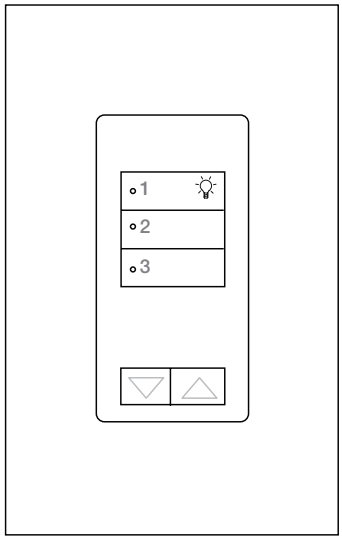

QSWS2-3BRLI-WH-EGN
(Insert version)

Job Name:	Model Numbers:	
Job Number:		

Specifications

Power Input (Control Link Terminal 2)
SELV/PELV/NEC® Class 2. Operating voltage: 24–36 V⎓ 30 mA

Key Design Features
- Field-changeable button and faceplate assemblies allow easy customization.
- Meets IEC 801-2. Tested to withstand 15 kV electrostatic discharge without damage or memory loss.
- Faceplate snaps on with no visible means of attachment.
- Available as an “insert” style control for multiganging.
- Can be ganged to share a common faceplate with Nova T☆ and Vareo dimmers. To order new wallplates for multi-ganging, specify “R3” openings in a Nova T☆ multi-gang FB (fins broken) series model number.
- Use Faceplate Replacement Kits to change color, button configuration, or engraving, or to convert between non-insert and insert configurations.

System Communications and Capacity
- SELV/PELV/NEC® Class 2 wiring connects wallstations to other devices on the QS Link.
- A QS system can have up to 100 devices and 100 zones; seeTouch QS wallstations each count as one device and zero zones on the QS Link.
- A seeTouch QS wallstation consumes one power draw unit (PDU) on the QS link. For complete information, see **Power Draw Units on the QS Link** (P/N 369405) at www.lutron.com

Terminals
Accept up to two 18 AWG (1.0 mm^2).

Environment
32 °F to 104 °F (0 °C to 40 °C). Relative humidity less than 90% non-condensing.

Compatibility
seeTouch QS keypads are compatible with GRAFIK Eye QS, Sivoia QS, Energi Savr Node, and Quantum systems.

Mounting
Typical backbox dimensions:
3.75 in (95 mm) high,
2.1875 in (55 mm) wide,
2.75 in (70 mm) deep.

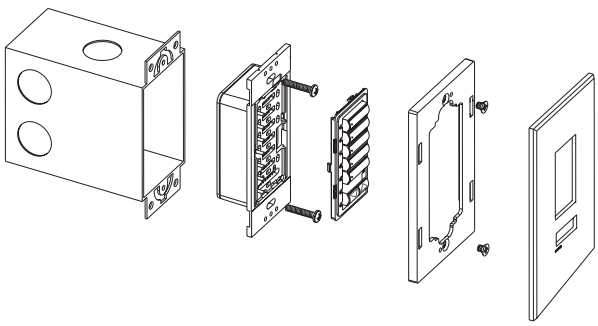

Dimensions
Front View

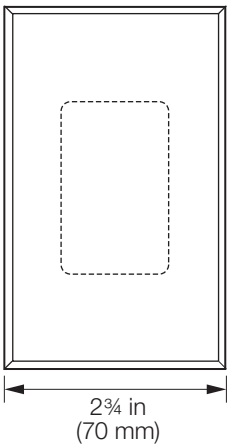

Side View

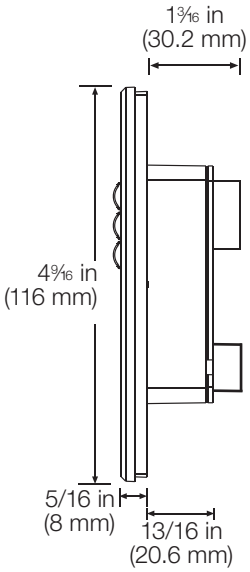

Back View

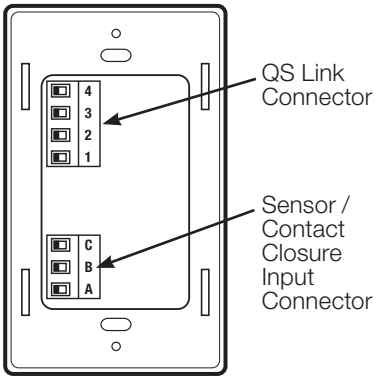

Job Name:	Model Numbers:	
Job Number:		

Available Control Types

seeTouch wallstations are available in three types:

Lights Only

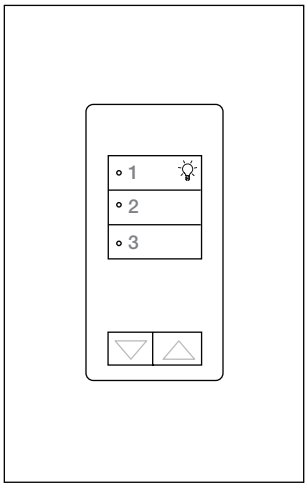

QSWS2-3BRLI-WH-EGN
(Insert version)

Lights and Shades

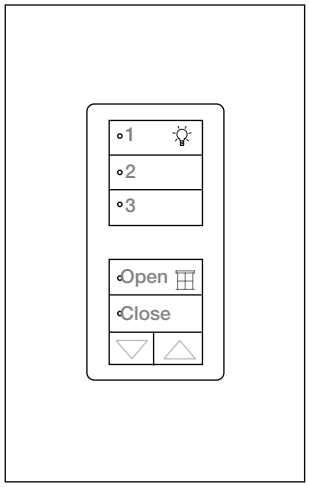

QSWS2-1RLDI-WH-EGN
(Insert version)

Shades Only

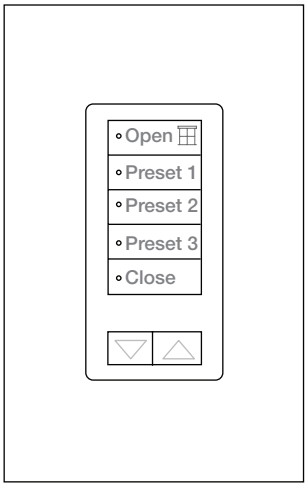

QSWS2-5BRLI-WH-E01
(Insert version)

Lights Only

- Controls only lights.
- Has a programmable column type (choose from the list on the following pages).
- Engraving options: General (EGN) and Non-Standard (NST).

Lights and Shades

- Top column controls only lights and has a programmable column type (choose from the list on the following pages).
- Bottom column controls only shades and has a programmable column type (choose from the list on the following pages).
- Engraving options: General (EGN) and Non-Standard (NST).

Shades Only

- Controls only shades.
- Models with preset buttons have programmable preset levels.
- Engraving options: Standard (E01), Secondary (E02), and Non-Standard (NST).

Job Name:	Model Numbers:	
Job Number:		

Available Column Types

Scene (with Off)

- Controls pre-programmed scenes on one or more scene controllers (such as a GRAFIK Eye QS, or an area on an Energi Savr Node).
- Buttons within a column control the same scene controller(s) (different buttons within a column cannot control different scene controllers).
- The scene recalled by the first button in a column is programmable, subsequent buttons recall the next numerical scene, and the last button always recalls Scene Off.
- A 1-button scene wallstation will always toggle between the assigned scene and Scene Off.

Scene (without OFF)

- Identical function to scene with Off, except the last button in a column recalls the next consecutive scene, not Scene Off.

Zone Toggle

- Buttons toggle a zone or group of zones between programmable preset values and Off (where all zones are Off).
- Each zone can be programmed to a different value.
- Each button can be individually programmed to a different zone or group of zones.

Partition

- Allows the user to assign individual buttons of a column to different scene controllers (areas).
- One button press (button LED lights) indicates an open partition within the space so that devices programmed to that button talk to each other in both directions.
- A second button press (button LED goes off) indicates a closed partition within the space so that devices programmed to that button function independently.

2B Partition (2-button wallstation only)

- Identical function to partition, except that there are two buttons.
- A top button press indicates an open partition; a bottom button press indicates a closed partition.

2B Fine Tune (2-button wallstation only)

- Buttons function as raise and lower buttons for assigned zones.
- A button tap will raise/lower the level of assigned zones by 1 percent.
- Pressing and holding the buttons smoothly raises to high end or smoothly lowers to low end.

2B Sequence (2-button wallstation only)

- All assigned scene controllers continuously cycle through either Scenes 1-4 or Scenes 5-16 using the programmed fade times for each scene.
- Useful for spaces that desire dynamic lighting, such as decorative lighting or displays in retail stores.

(continued on next page)

Job Name:	Model Numbers:	
Job Number:		

Available Column Types (continued)

2B Panic (2-button wallstation only)

- Button press causes all assigned scene controllers go to Scene 16.
- Temporarily disables all button presses and ignores scene or zone level changes.

2B Timeclock (2-button wallstation only)

- Allows the user to enable or disable the timeclock on a GRAFIK Eye QS.
- A top button press enables the timeclock; a bottom button press disables the timeclock.

Shade

- Wallstation must have more than 1 button.
- Raise/Lower buttons are recommended for programming.
- The top button becomes the Open button; the bottom button becomes the Close button for associated Lutron Sivoia QS shades or third-party AC shades.
- For keypads with more than two buttons, the middle buttons are programmable preset buttons.

Shade Group

- Available only on a multi-column keypad where another column is a shade column.
- Allows the shade column to operate as multiple independent keypads (one per group).
- The shade group column selects which independent keypad is currently active (indicated by the group button whose LED is lit).

Note: Column types can be changed using the GRAFIK Eye QS programming menu (e.g., control programmed as lights only can be changed to shades only).

Job Name:	Model Numbers:	
Job Number:		

How to Build a Standard seeTouch QS Model Number

QSWS2-_____-_____-WH-_____

- Prefix
- Button Configuration (see next page)
- Insert Style
  - N: Non-insert
  - I: Insert
- White Matte Finish
- Engraving Code*

NOTE: Standard engraving text does not automatically assign or re-assign system programming to the QS keypad buttons. Project-specific customer input and programming by a Lutron service team member is still required to achieve a desired sequence of operation/system functionality per control.

* Engraving options may vary based on Button Configuration selected. Refer to next pages for available options (see Standard seeTouch QS Wallstation Button Functions Summary).

Button Configurations			
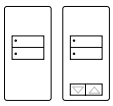	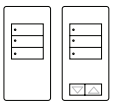	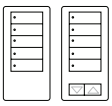	
2B	3B	5B	7B
Generic			
Engraving Code: G for all configurations			
On Off	1 2 Off	1 2 3 4 Off	1 2 3 4 5 6 Off
Shades			
Engraving Code: S for all configurations			
Open Close	Open Preset 1 Close	Open Preset 1 Preset 2 Preset 3 Close	Open Preset 1 Preset 2 Preset 3 Preset 4 Preset 5 Close
Hotel Room			
Engraving Code: H for all configurations			
DND MUR	High Low Off	High Medium Low Nightlight Off	Welcome Foyer Living Bed Bath Bedside Off
Auditorium			
Engraving Code: A for all configurations			
All On All Off	All On Present All Off	All On Present Lecture Exam All Off	All On Present Lecture Exam Perform Cleaning All Off

Job Name:	Model Numbers:	
Job Number:		

Standard seeTouch QS Wallstation Button Functions Summary (WH Only)

Button Configurations			
2B	3B	5B	7B
Lobby			
Engraving Codes			
A	L	L	L
All On All Off	All On Event All Off	All On Morning Afternoon Evening All Off	All On Morning Afternoon Evening After Hours Event All Off
Restaurant			
Engraving Codes			
A	R	R	R
All On All Off	All On After Hours All Off	All On Breakfast Lunch Dinner All Off	All On Breakfast Lunch Dinner After Hours Cleaning All Off

Button Configurations			
2B	3B	5B	7B
Retail			
Engraving Codes			
A	R	L	T
All On All Off	All On After Hours All Off	All On Morning Afternoon Evening All Off	All On Morning Afternoon Evening After Hours Cleaning All Off
Classroom			
Engraving Codes			
A	A	A	C
All On All Off	All On Present All Off	All On Present Lecture Exam All Off	All On Present Lecture Exam Movie Cleaning All Off

Job Name:	Model Numbers:	
Job Number:		

Standard seeTouch QS Wallstation Button Functions Summary (WH only) (continued)

	Button Configurations			
1B	2B	3B	5B	7B
Meeting Room				
Engraving Codes				
	A	M	M	M
N/A	All On All Off	All On Meeting All Off	All On Meeting A/V Cleaning All Off	All On Meeting A/V Pendant Perimeter Event All Off
Ballroom				
Engraving Codes				
	A	L	B	B
N/A	All On All Off	All On Event 1 All Off	All On Event 1 Event 2 Event 3 All Off	All On Event 1 Event 2 Event 3 Event 4 Event 5 All Off
Private Office				
Engraving Codes				
	A	P	P	
N/A	All On All Off	On Dim Off	On Dim Zone 1 Zone 2 Off	N/A
Zone Toggle				
Engraving Code: Z for all configurations				
On/Off	Zone 1 Zone 2	Zone 1 Zone 2 Zone 3	Zone 1 Zone 2 Zone 3 Zone 4 Zone 5	Zone 1 Zone 2 Zone 3 Zone 4 Zone 5 Zone 6 Zone 7

Button Configurations		
1RLD	2RLD	3BD
Shades – Dual Zone		
Engraving Code: D for all configurations		
N/A	Open Close Open Close	N/A
Lights and Shades A		
Engraving Code: U for all configurations		
On Preset Off Open Close	On Off Open Close	On Preset Off Open Preset Close
Lights Dual Zone		
Engraving Code: K for all configurations		
N/A	On Off On Off	On Preset Off On Preset Off
Lights and Shades B		
Engraving Code: Q for all configurations		
N/A	N/A	On Preset Off Open Stop Close

Job Name:	Model Numbers:	
Job Number:		

369489g 22 05.19.20

How to Build a Custom seeTouch QS Model Number

QSWS2- ____ ____ - ____ - ____

- Prefix
- Button Configuration (see next page)
- Insert Style
  - N: Non-insert
  - I: Insert
- Color/ Finish
- Engraving Code

Color/Finish Codes

Architectural Matte Finishes

White	WH
Ivory	IV
Beige	BE
Gray	GR
Brown	BR
Black	BL
Almond	AL
Light Almond	LA
Taupe	TP

Architectural Metal Finishes

With black plastic buttons (standard).

Bright Brass	BB
Bright Chrome	BC
Bright Nickel	BN
Satin Brass	SB
Satin Chrome	SC
Satin Nickel	SN
Antique Brass	QB
Antique Bronze	QZ

Anodized Aluminum Finishes

With black plastic buttons (standard).

Clear	CLA
Black	BLA
Brass	BRA

Satin Colors Matte Finishes

Available with Insert (I) style controls only.

Snow	SW
Midnight	MN
Taupe	TP
Biscuit	BI
Eggshell	ES
Palladium	PD*
Hot	HT*
Merlot	MR*
Plum	PL*
Sienna	SI*
Terracotta	TC*
Bluestone	BG*
Green briar	GB*
Goldstone	QS*
Mocha stone	MS*
Stone	ST*
Desert Stone	DS*
Limestone	LS*

*__Note:__ Some Satin Colors units ship with different color buttons. For more information, please visit the seeTouch website at **www.lutron.com/seetouch**

*For the latest color offerings please see our website: http://www.lutron.com/satincolors

If no color is specified, wallstations will ship with white (WH) finish.

Engraving Codes

Omit: Unengraved
EGN: General Engraving
For “Lights only” and “Lights and Shades” controls
E01: Standard Engraving
For “Shades only” controls
E02: Secondary engraving for “Shades only” controls
NST: Non-Standard Text Engraving
Please visit the GRAFIK Eye QS website at **www.lutron.com/grafikeyeqs** for custom engraving forms

Engraving Notes

- The engraving option (model number and suffix) is related to the control type, as shown above in the "How to Build a Standard seeTouch QS Model Number" section.
- Four engraving options are available:
  1. EGN: General engraving for ‘Lights Only’ and ‘Lights and Shades’ controls
  2. E01: Standard engraving for ‘Shades Only’ controls and ‘Lights and Shades’ for model QSWE-10BRLI-WH-E01 only
  3. E02: Secondary engraving for ‘Shades Only’ controls
  4. NST: Non-standard engraving for ‘Lights Only’, ‘Lights and Shades’, or ‘Shades Only’ controls
- If no engraving is specified, wallstations will ship with an engraving certificate, with EGN being its default engraving type.

Job Name:	Model Numbers:	
Job Number:		

Custom seeTouch QS Wallstation Button Functions Summary

Button Configuration							
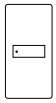	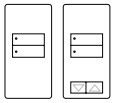	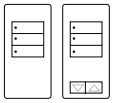	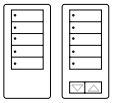		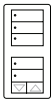	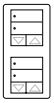	
1B	2B	3B	5B	7B	1RLD	2RLD	3BD
EGN (General Engraving) Functionality							
Scene 1 ☼	Scene 1 Off ☼	Scene 1 Scene 2 Scene 3 ☼	Scene 1 Scene 2 Scene 3 Scene 4 Off ☼	Scene 1 Scene 2 Scene 3 Scene 4 Scene 5 Scene 6 Scene 7 ☼	Scene 1 Scene 2 Scene 3 ☼ Open Close ▦	Scene 1 Off ☼ Open Close ▦	Scene 1 Scene 2 Scene 3 ☼ Open Preset Close ▦
E01 (Standard Engraving) Functionality							
N/A	Open Close ▦	Open Preset Close ▦	Open Preset 1 Preset 2 Preset 3 Close ▦	N/A	Group 1 Group 2 Group 3 ▦ Open Close ▦	Open Close ▦ Open Close ▦	Open Preset Close ▦ Open Preset Close ▦
E02 (Secondary/Shades Only Engraving) Functionality							
N/A	N/A	N/A	N/A	N/A	Blackout Sheer Both ▦ Open Close ▦	N/A	N/A

Legend:

☼ Light Control

▦ Shade Control

Job Name:	Model Numbers:	
Job Number:		

How to Build a seeTouch QS Model Number

Button Configurations

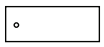

1B
1-button

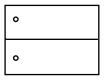

2B
2-button

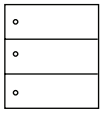

3B
3-button

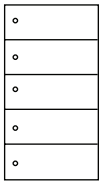

5B
5-button

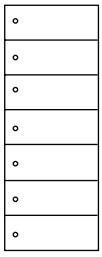

7B
7-button

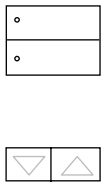

2BRL
2-button with raise/lower

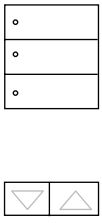

3BRL
3-button with raise/lower

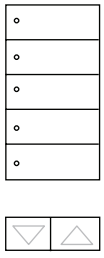

5BRL
5-button with raise/lower

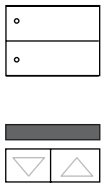

2BRLIR
2-button with IR receiver and raise/lower

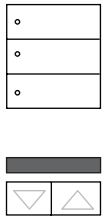

3BRLIR
3-button with IR receiver and raise/lower

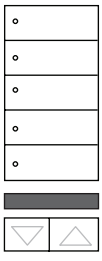

5BRLIR
5-button with IR receiver and raise/lower

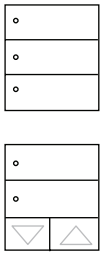

1RLD
Dual with 3-button and 2-button with raise/lower

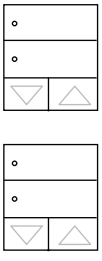

2RLD
Dual 2-button with raise/lower

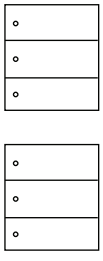

3BD
Dual 3-button

Job Name:	Model Numbers:	
Job Number:		

Faceplate Information

Faceplate Replacement Kits

Use faceplate replacement kits to change: colors, button configuration, engraving, between insert and non-insert versions. Each kit includes an adapter, button assembly, and wallplate

Non-Insert Kit

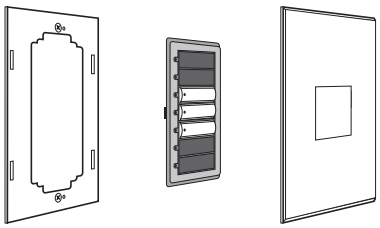

Non-insert style controls: Faceplate complements a specified button kit. When the faceplate is removed or replaced, the buttons are removed and replaced along with it.

Insert Kit

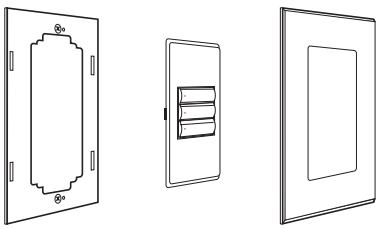

Insert style controls: Faceplate is a decorator style with a universal size opening that fits all button kits. This style allows for easy replacements of button kits without changing the faceplate.

Model Numbers for Kits

Non-Insert	Insert
QSWS2R-1BN	QSWS2R-1BI
QSWS2R-2BN	QSWS2R-2BI
QSWS2R-3BN	QSWS2R-3BI
QSWS2R-5BN	QSWS2R-5BI
QSWS2R-7BN	QSWS2R-7BI
QSWS2R-2BRLN	QSWS2R-2BRLI
QSWS2R-3BRLN	QSWS2R-3BRLI
QSWS2R-5BRLN	QSWS2R-5BRLI
QSWS2R-1RLDN	QSWS2R-1RLDI
QSWS2R-2RLDN	QSWS2R-2RLDI
QSWS2R-3BDN	QSWS2R-3BDI
QSWS2R-2BRLIRN	QSWS2R-2BRLIRI
QSWS2R-3BRLIRN	QSWS2R-3BRLIRI
QSWS2R-5BRLIRN	QSWS2R-5BRLIRI

Job Name:	Model Numbers:	
Job Number:		

Wallstation Installation

QS Link Wiring

- Use SELV/PELV/NEC® Class 2 wiring to connect wallstations to the QS Link.
- Connect two 22 AWG (0.5 mm²) shielded, twisted pair wires to terminals 3 and 4 of the wallstation's control link connector. Shielding (drain) of the twisted pair wires must be connected together as shown, but do not connect the shielding to earth/ground or the wallstation and do not allow it to contact the grounded wallbox.
- Connect the appropriate size wires to terminals 1 and 2 for power, according to your link length (see table below).
- Connect drain/shield as shown. Do not connect to ground (earth) or wallstation. Connect the bare drain wires and cut off the outside shield.

Note: Use appropriate wire connecting devices as specified by local codes.

Link Wiring (<500 ft/153 m)

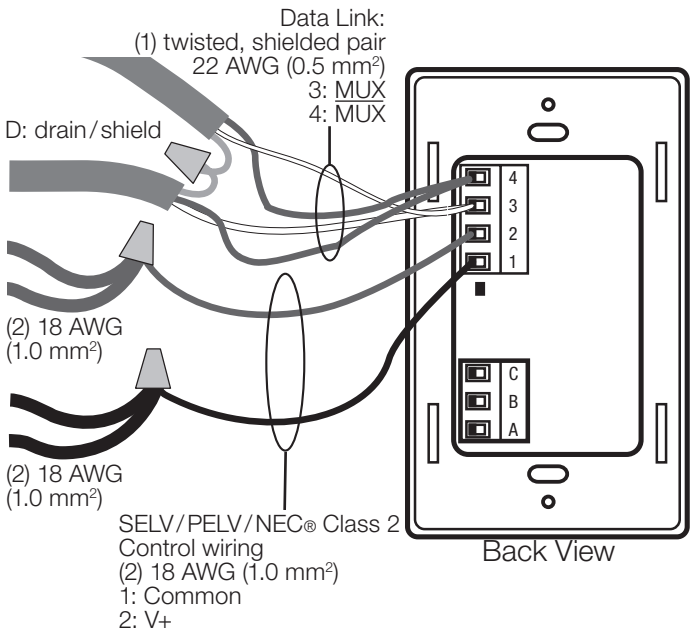

Link Wiring (500 ft/153 m to 2000 ft/610 m)

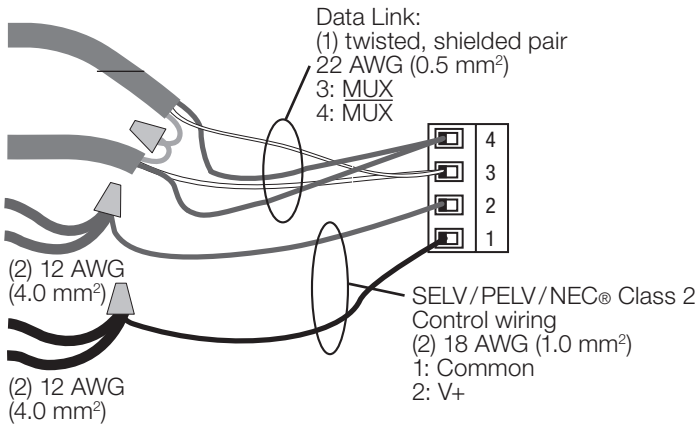

QS Link Wire Sizes (check compatibility in your area)

QS Link Wiring Length	Wire Gauge	Lutron Cable Part Number
Less than 500 ft (153 m)	Power (terminals 1 and 2) 1 pair 18 AWG (1.0 mm²)	GRX-CBL-346S (non-plenum) GRX-PCBL-346S (plenum)
	Data (terminals 3 and 4) 1 twisted, shielded pair 22 AWG (0.5 mm²)	
500ft to 2000 ft (153 m to 610 m)	Power (terminals 1 and 2) 1 pair 12 AWG (4.0 mm²)	GRX-CBL-46L (non-plenum) GRX-PCBL-46L (plenum)
	Data (terminals 3 and 4) 1 twisted, shielded pair 22 AWG (0.5 mm²)	

Job Name:	Model Numbers:	
Job Number:		

Contact Closure Inputs

Specifications

- Inputs must be dry contact closure, solid-state, open collector, or active-low (NPN)/active-high (PNP) output.
  - Open collector NPN or active-low on-state voltage must be less than 2 V⎓ and sink 3.0 mA
  - Open collector PNP or active-high on-state voltage must be greater than 12 V⎓ and source 3.0 mA
- Wallstation is miswire protected up to 36 V⎓.
- Outputs must stay in the closed or open states for at least 40 msec in order to be recognized by the wallstation.

Contact Closure Input Wiring

- Use low-voltage SELV/PELV/NEC® Class 2 wiring to connect the contact closure inputs to the wallstation.

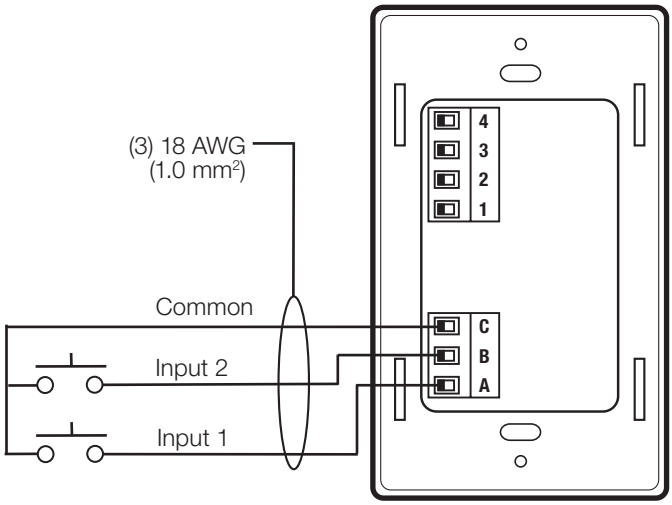

Back View

Lutron, Lutron, GRAFIK Eye, Nova T☆, Quantum, Satin Colors, seeTouch, Sivoia, Energi Savr Node, and Vareo are trademarks or registered trademarks of Lutron Electronics Co., Inc. in the US and/or other countries.
NEC is a registered trademark of National Fire Protection Association, Quincy, Massachusetts.

Job Name:	Model Numbers:	
Job Number:		

Color and Engraving Codes (continued)

QSWS2-5BRLN-___-___
QSWS2-5BRLI-___-___
5-Button Wallstation with Raise/Lower

Description

- Often used to select and adjust scenes.
- Receives up to two contact closure inputs through a connector on the back of the wallstation.
- Large, rounded buttons are easy to use.
- Backlit buttons with optional engraving make it easy to find and operate the wallstation in low-light conditions.
- Optional button engraving is angled up to the eye for easy reading.
- Master Raise/Lower brightens or dims all lighting or raises/lowers all assigned shades in the last selected scene or toggled group.
- The LEDs next to each button are used during programming and provide feedback when the buttons are pressed.
- Shade control features (E01 engraving):
  - Can control Sivoia QS window treatments.
  - Pressing the Open (or Close) button once will cause the window treatments to move to their fully open (or closed) position. Tap any button (regardless of function) to stop a shade that is in motion.
  - Three (3) programmable preset buttons.

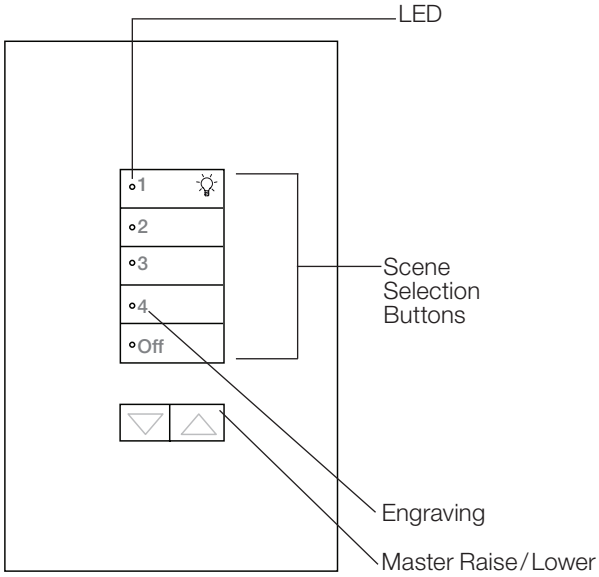

QSWS2-5BRLN-WH-EGN
(Non-insert version)

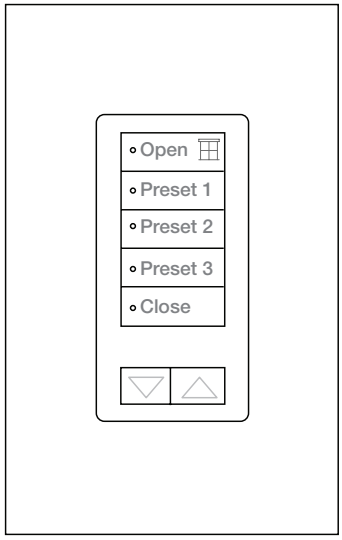

QSWS2-5BRLI-WH-E01
(Insert version)

Job Name:	Model Numbers:	
Job Number:		

Specifications

Power Input (Control Link Terminal 2)
SELV/PELV/NEC® Class 2. Operating voltage: 24–36 V⎓ 30 mA

Key Design Features
- Field-changeable button and faceplate assemblies allow easy customization.
- Meets IEC 801-2. Tested to withstand 15 kV electrostatic discharge without damage or memory loss.
- Faceplate snaps on with no visible means of attachment.
- Available as an “insert” style control for multiganging.
- Can be ganged to share a common faceplate with Nova T☆ and Vareo dimmers. To order new wallplates for multi-ganging, specify “R3” openings in a Nova T☆ multi-gang FB (fins broken) series model number.
- Use Faceplate Replacement Kits to change color, button configuration, or engraving, or to convert between non-insert and insert configurations.

System Communications and Capacity
- SELV/PELV/NEC® Class 2 wiring connects wallstations to other devices on the QS Link.
- A QS system can have up to 100 devices and 100 zones; seeTouch QS wallstations each count as one device and zero zones on the QS Link.
- A seeTouch QS wallstation consumes one power draw unit (PDU) on the QS link. For complete information, see **Power Draw Units on the QS Link** (P/N 369405) at www.lutron.com

Terminals
Accept up to two 18 AWG (1.0 mm^2).

Environment
32 °F to 104 °F (0 °C to 40 °C). Relative humidity less than 90% non-condensing.

Compatibility
seeTouch QS keypads are compatible with GRAFIK Eye QS, Sivoia QS, Energi Savr Node, and Quantum systems.

Mounting
Typical backbox dimensions:
3.75 in (95 mm) high,
2.1875 in (55 mm) wide,
2.75 in (70 mm) deep.

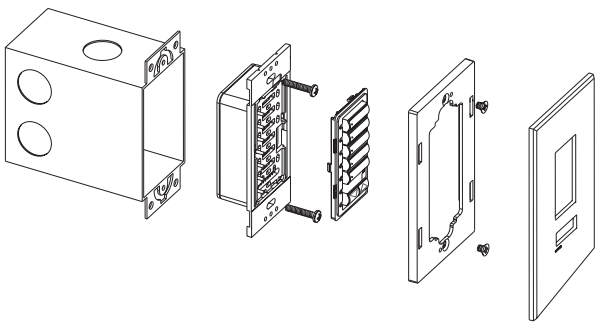

Dimensions
Front View

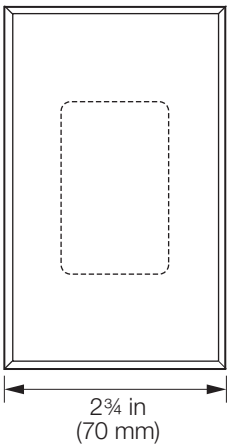

Side View

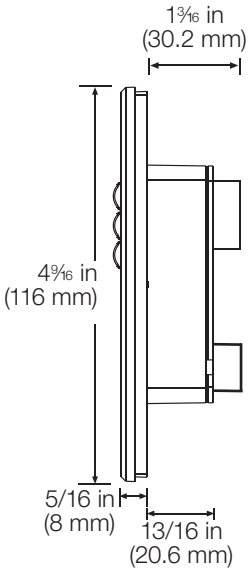

Back View

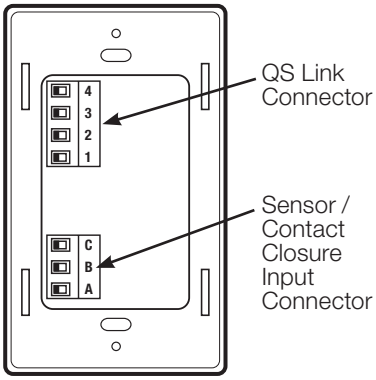

Job Name:	Model Numbers:	
Job Number:		

Available Control Types

seeTouch wallstations are available in three types:

Lights Only

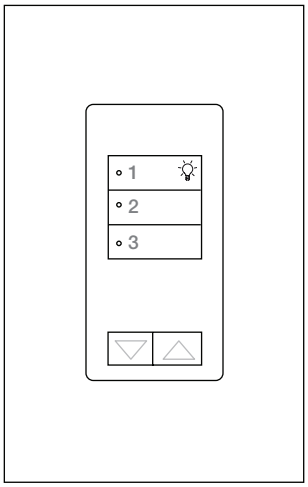

QSWS2-3BRLI-WH-EGN
(Insert version)

Lights and Shades

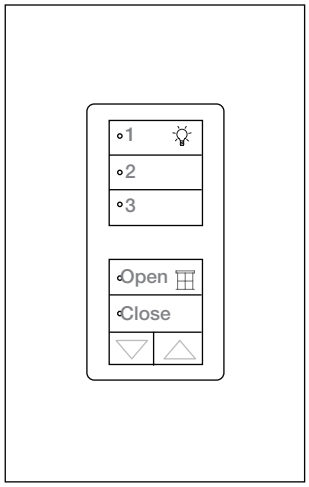

QSWS2-1RLDI-WH-EGN
(Insert version)

Shades Only

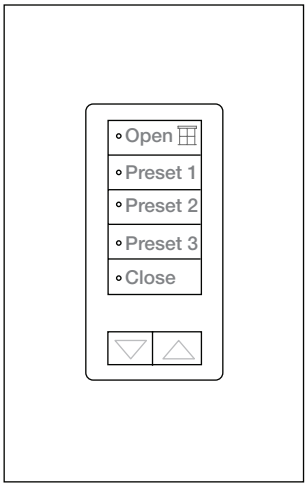

QSWS2-5BRLI-WH-E01
(Insert version)

Lights Only

- Controls only lights.
- Has a programmable column type (choose from the list on the following pages).
- Engraving options: General (EGN) and Non-Standard (NST).

Lights and Shades

- Top column controls only lights and has a programmable column type (choose from the list on the following pages).
- Bottom column controls only shades and has a programmable column type (choose from the list on the following pages).
- Engraving options: General (EGN) and Non-Standard (NST).

Shades Only

- Controls only shades.
- Models with preset buttons have programmable preset levels.
- Engraving options: Standard (E01), Secondary (E02), and Non-Standard (NST).

Job Name:	Model Numbers:	
Job Number:		

Available Column Types

Scene (with Off)

- Controls pre-programmed scenes on one or more scene controllers (such as a GRAFIK Eye QS, or an area on an Energi Savr Node).
- Buttons within a column control the same scene controller(s) (different buttons within a column cannot control different scene controllers).
- The scene recalled by the first button in a column is programmable, subsequent buttons recall the next numerical scene, and the last button always recalls Scene Off.
- A 1-button scene wallstation will always toggle between the assigned scene and Scene Off.

Scene (without OFF)

- Identical function to scene with Off, except the last button in a column recalls the next consecutive scene, not Scene Off.

Zone Toggle

- Buttons toggle a zone or group of zones between programmable preset values and Off (where all zones are Off).
- Each zone can be programmed to a different value.
- Each button can be individually programmed to a different zone or group of zones.

Partition

- Allows the user to assign individual buttons of a column to different scene controllers (areas).
- One button press (button LED lights) indicates an open partition within the space so that devices programmed to that button talk to each other in both directions.
- A second button press (button LED goes off) indicates a closed partition within the space so that devices programmed to that button function independently.

2B Partition (2-button wallstation only)

- Identical function to partition, except that there are two buttons.
- A top button press indicates an open partition; a bottom button press indicates a closed partition.

2B Fine Tune (2-button wallstation only)

- Buttons function as raise and lower buttons for assigned zones.
- A button tap will raise/lower the level of assigned zones by 1 percent.
- Pressing and holding the buttons smoothly raises to high end or smoothly lowers to low end.

2B Sequence (2-button wallstation only)

- All assigned scene controllers continuously cycle through either Scenes 1-4 or Scenes 5-16 using the programmed fade times for each scene.
- Useful for spaces that desire dynamic lighting, such as decorative lighting or displays in retail stores.

(continued on next page)

Job Name:	Model Numbers:	
Job Number:		

Available Column Types (continued)

2B Panic (2-button wallstation only)

- Button press causes all assigned scene controllers go to Scene 16.
- Temporarily disables all button presses and ignores scene or zone level changes.

2B Timeclock (2-button wallstation only)

- Allows the user to enable or disable the timeclock on a GRAFIK Eye QS.
- A top button press enables the timeclock; a bottom button press disables the timeclock.

Shade

- Wallstation must have more than 1 button.
- Raise/Lower buttons are recommended for programming.
- The top button becomes the Open button; the bottom button becomes the Close button for associated Lutron Sivoia QS shades or third-party AC shades.
- For keypads with more than two buttons, the middle buttons are programmable preset buttons.

Shade Group

- Available only on a multi-column keypad where another column is a shade column.
- Allows the shade column to operate as multiple independent keypads (one per group).
- The shade group column selects which independent keypad is currently active (indicated by the group button whose LED is lit).

Note: Column types can be changed using the GRAFIK Eye QS programming menu (e.g., control programmed as lights only can be changed to shades only).

Job Name:	Model Numbers:	
Job Number:		

How to Build a Standard seeTouch QS Model Number

QSWS2-_____-_____-WH-_____

- Prefix
- Button Configuration (see next page)
- Insert Style
  - N: Non-insert
  - I: Insert
- White Matte Finish
- Engraving Code*

NOTE: Standard engraving text does not automatically assign or re-assign system programming to the QS keypad buttons. Project-specific customer input and programming by a Lutron service team member is still required to achieve a desired sequence of operation/system functionality per control.

* Engraving options may vary based on Button Configuration selected. Refer to next pages for available options (see Standard seeTouch QS Wallstation Button Functions Summary).

Button Configurations			
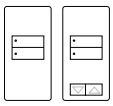	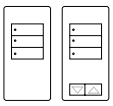	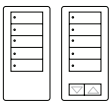	
2B	3B	5B	7B
Generic			
Engraving Code: G for all configurations			
On Off	1 2 Off	1 2 3 4 Off	1 2 3 4 5 6 Off
Shades			
Engraving Code: S for all configurations			
Open Close	Open Preset 1 Close	Open Preset 1 Preset 2 Preset 3 Close	Open Preset 1 Preset 2 Preset 3 Preset 4 Preset 5 Close
Hotel Room			
Engraving Code: H for all configurations			
DND MUR	High Low Off	High Medium Low Nightlight Off	Welcome Foyer Living Bed Bath Bedside Off
Auditorium			
Engraving Code: A for all configurations			
All On All Off	All On Present All Off	All On Present Lecture Exam All Off	All On Present Lecture Exam Perform Cleaning All Off

Job Name:	Model Numbers:	
Job Number:		

Standard seeTouch QS Wallstation Button Functions Summary (WH Only)

Button Configurations			
2B	3B	5B	7B
Lobby			
Engraving Codes			
A	L	L	L
All On All Off	All On Event All Off	All On Morning Afternoon Evening All Off	All On Morning Afternoon Evening After Hours Event All Off
Restaurant			
Engraving Codes			
A	R	R	R
All On All Off	All On After Hours All Off	All On Breakfast Lunch Dinner All Off	All On Breakfast Lunch Dinner After Hours Cleaning All Off

Button Configurations			
2B	3B	5B	7B
Retail			
Engraving Codes			
A	R	L	T
All On All Off	All On After Hours All Off	All On Morning Afternoon Evening All Off	All On Morning Afternoon Evening After Hours Cleaning All Off
Classroom			
Engraving Codes			
A	A	A	C
All On All Off	All On Present All Off	All On Present Lecture Exam All Off	All On Present Lecture Exam Movie Cleaning All Off

Job Name:	Model Numbers:	
Job Number:		

Standard seeTouch QS Wallstation Button Functions Summary (WH only) (continued)

	Button Configurations			
1B	2B	3B	5B	7B
Meeting Room				
Engraving Codes				
	A	M	M	M
N/A	All On All Off	All On Meeting All Off	All On Meeting A/V Cleaning All Off	All On Meeting A/V Pendant Perimeter Event All Off
Ballroom				
Engraving Codes				
	A	L	B	B
N/A	All On All Off	All On Event 1 All Off	All On Event 1 Event 2 Event 3 All Off	All On Event 1 Event 2 Event 3 Event 4 Event 5 All Off
Private Office				
Engraving Codes				
	A	P	P	
N/A	All On All Off	On Dim Off	On Dim Zone 1 Zone 2 Off	N/A
Zone Toggle				
Engraving Code: Z for all configurations				
On/Off	Zone 1 Zone 2	Zone 1 Zone 2 Zone 3	Zone 1 Zone 2 Zone 3 Zone 4 Zone 5	Zone 1 Zone 2 Zone 3 Zone 4 Zone 5 Zone 6 Zone 7

Button Configurations		
1RLD	2RLD	3BD
Shades – Dual Zone		
Engraving Code: D for all configurations		
N/A	Open Close Open Close	N/A
Lights and Shades A		
Engraving Code: U for all configurations		
On Preset Off Open Close	On Off Open Close	On Preset Off Open Preset Close
Lights Dual Zone		
Engraving Code: K for all configurations		
N/A	On Off On Off	On Preset Off On Preset Off
Lights and Shades B		
Engraving Code: Q for all configurations		
N/A	N/A	On Preset Off Open Stop Close

Job Name:	Model Numbers:	
Job Number:		

369489g 22 05.19.20

How to Build a Custom seeTouch QS Model Number

QSWS2- ____ ____ - ____ - ____

- Prefix
- Button Configuration (see next page)
- Insert Style
  - N: Non-insert
  - I: Insert
- Color/ Finish
- Engraving Code

Color/Finish Codes

Architectural Matte Finishes

White	WH
Ivory	IV
Beige	BE
Gray	GR
Brown	BR
Black	BL
Almond	AL
Light Almond	LA
Taupe	TP

Architectural Metal Finishes

With black plastic buttons (standard).

Bright Brass	BB
Bright Chrome	BC
Bright Nickel	BN
Satin Brass	SB
Satin Chrome	SC
Satin Nickel	SN
Antique Brass	QB
Antique Bronze	QZ

Anodized Aluminum Finishes

With black plastic buttons (standard).

Clear	CLA
Black	BLA
Brass	BRA

Satin Colors Matte Finishes

Available with Insert (I) style controls only.

Snow	SW
Midnight	MN
Taupe	TP
Biscuit	BI
Eggshell	ES
Palladium	PD*
Hot	HT*
Merlot	MR*
Plum	PL*
Sienna	SI*
Terracotta	TC*
Bluestone	BG*
Green briar	GB*
Goldstone	QS*
Mocha stone	MS*
Stone	ST*
Desert Stone	DS*
Limestone	LS*

*__Note:__ Some Satin Colors units ship with different color buttons. For more information, please visit the seeTouch website at **www.lutron.com/seetouch**

*For the latest color offerings please see our website: http://www.lutron.com/satincolors

If no color is specified, wallstations will ship with white (WH) finish.

Engraving Codes

Omit: Unengraved
EGN: General Engraving
For “Lights only” and “Lights and Shades” controls
E01: Standard Engraving
For “Shades only” controls
E02: Secondary engraving for “Shades only” controls
NST: Non-Standard Text Engraving
Please visit the GRAFIK Eye QS website at **www.lutron.com/grafikeyeqs** for custom engraving forms

Engraving Notes

- The engraving option (model number and suffix) is related to the control type, as shown above in the "How to Build a Standard seeTouch QS Model Number" section.
- Four engraving options are available:
  1. EGN: General engraving for ‘Lights Only’ and ‘Lights and Shades’ controls
  2. E01: Standard engraving for ‘Shades Only’ controls and ‘Lights and Shades’ for model QSWE-10BRLI-WH-E01 only
  3. E02: Secondary engraving for ‘Shades Only’ controls
  4. NST: Non-standard engraving for ‘Lights Only’, ‘Lights and Shades’, or ‘Shades Only’ controls
- If no engraving is specified, wallstations will ship with an engraving certificate, with EGN being its default engraving type.

Job Name:	Model Numbers:	
Job Number:		

Custom seeTouch QS Wallstation Button Functions Summary

Button Configuration							
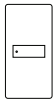	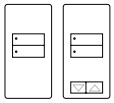	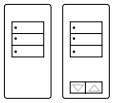	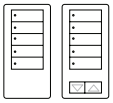		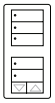	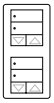	
1B	2B	3B	5B	7B	1RLD	2RLD	3BD
EGN (General Engraving) Functionality							
Scene 1 ☼	Scene 1 Off ☼	Scene 1 Scene 2 Scene 3 ☼	Scene 1 Scene 2 Scene 3 Scene 4 Off ☼	Scene 1 Scene 2 Scene 3 Scene 4 Scene 5 Scene 6 Scene 7 ☼	Scene 1 Scene 2 Scene 3 ☼ Open Close ▦	Scene 1 Off ☼ Open Close ▦	Scene 1 Scene 2 Scene 3 ☼ Open Preset Close ▦
E01 (Standard Engraving) Functionality							
N/A	Open Close ▦	Open Preset Close ▦	Open Preset 1 Preset 2 Preset 3 Close ▦	N/A	Group 1 Group 2 Group 3 ▦ Open Close ▦	Open Close ▦ Open Close ▦	Open Preset Close ▦ Open Preset Close ▦
E02 (Secondary/Shades Only Engraving) Functionality							
N/A	N/A	N/A	N/A	N/A	Blackout Sheer Both ▦ Open Close ▦	N/A	N/A

Legend:

☼ Light Control

▦ Shade Control

Job Name:	Model Numbers:	
Job Number:		

How to Build a seeTouch QS Model Number

Button Configurations

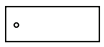

1B
1-button

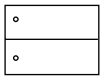

2B
2-button

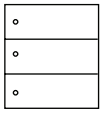

3B
3-button

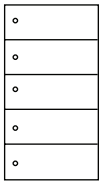

5B
5-button

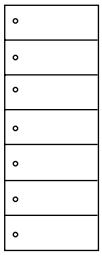

7B
7-button

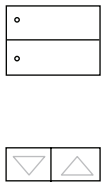

2BRL
2-button with raise/lower

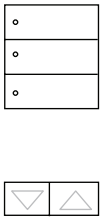

3BRL
3-button with raise/lower

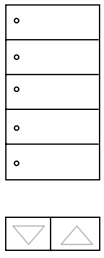

5BRL
5-button with raise/lower

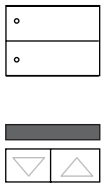

2BRLIR
2-button with IR receiver and raise/lower

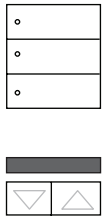

3BRLIR
3-button with IR receiver and raise/lower

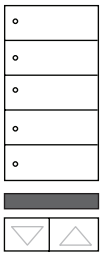

5BRLIR
5-button with IR receiver and raise/lower

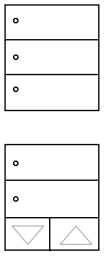

1RLD
Dual with 3-button and 2-button with raise/lower

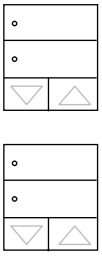

2RLD
Dual 2-button with raise/lower

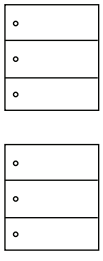

3BD
Dual 3-button

Job Name:	Model Numbers:	
Job Number:		

Faceplate Information

Faceplate Replacement Kits

Use faceplate replacement kits to change: colors, button configuration, engraving, between insert and non-insert versions. Each kit includes an adapter, button assembly, and wallplate

Non-Insert Kit

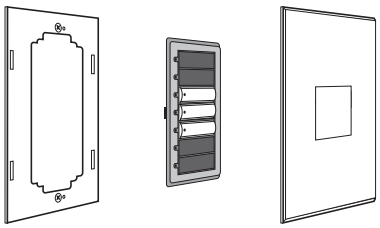

Non-insert style controls: Faceplate complements a specified button kit. When the faceplate is removed or replaced, the buttons are removed and replaced along with it.

Insert Kit

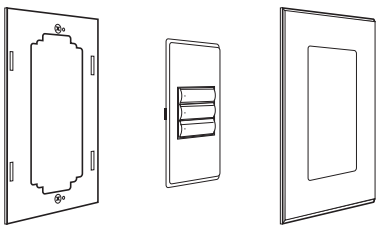

Insert style controls: Faceplate is a decorator style with a universal size opening that fits all button kits. This style allows for easy replacements of button kits without changing the faceplate.

Model Numbers for Kits

Non-Insert	Insert
QSWS2R-1BN	QSWS2R-1BI
QSWS2R-2BN	QSWS2R-2BI
QSWS2R-3BN	QSWS2R-3BI
QSWS2R-5BN	QSWS2R-5BI
QSWS2R-7BN	QSWS2R-7BI
QSWS2R-2BRLN	QSWS2R-2BRLI
QSWS2R-3BRLN	QSWS2R-3BRLI
QSWS2R-5BRLN	QSWS2R-5BRLI
QSWS2R-1RLDN	QSWS2R-1RLDI
QSWS2R-2RLDN	QSWS2R-2RLDI
QSWS2R-3BDN	QSWS2R-3BDI
QSWS2R-2BRLIRN	QSWS2R-2BRLIRI
QSWS2R-3BRLIRN	QSWS2R-3BRLIRI
QSWS2R-5BRLIRN	QSWS2R-5BRLIRI

Job Name:	Model Numbers:	
Job Number:		

Wallstation Installation

QS Link Wiring

- Use SELV/PELV/NEC® Class 2 wiring to connect wallstations to the QS Link.
- Connect two 22 AWG (0.5 mm²) shielded, twisted pair wires to terminals 3 and 4 of the wallstation's control link connector. Shielding (drain) of the twisted pair wires must be connected together as shown, but do not connect the shielding to earth/ground or the wallstation and do not allow it to contact the grounded wallbox.
- Connect the appropriate size wires to terminals 1 and 2 for power, according to your link length (see table below).
- Connect drain/shield as shown. Do not connect to ground (earth) or wallstation. Connect the bare drain wires and cut off the outside shield.

Note: Use appropriate wire connecting devices as specified by local codes.

Link Wiring (<500 ft/153 m)

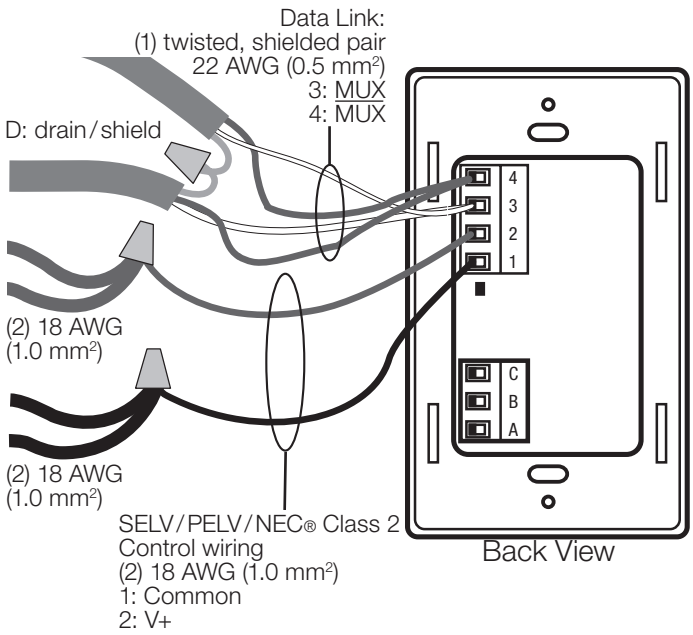

Link Wiring (500 ft/153 m to 2000 ft/610 m)

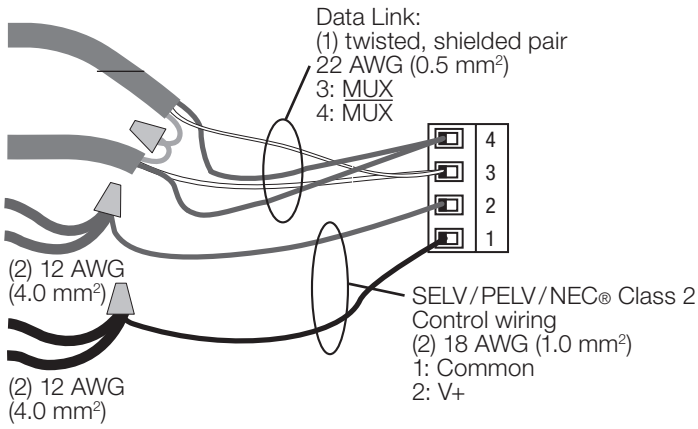

QS Link Wire Sizes (check compatibility in your area)

QS Link Wiring Length	Wire Gauge	Lutron Cable Part Number
Less than 500 ft (153 m)	Power (terminals 1 and 2) 1 pair 18 AWG (1.0 mm²)	GRX-CBL-346S (non-plenum) GRX-PCBL-346S (plenum)
	Data (terminals 3 and 4) 1 twisted, shielded pair 22 AWG (0.5 mm²)	
500ft to 2000 ft (153 m to 610 m)	Power (terminals 1 and 2) 1 pair 12 AWG (4.0 mm²)	GRX-CBL-46L (non-plenum) GRX-PCBL-46L (plenum)
	Data (terminals 3 and 4) 1 twisted, shielded pair 22 AWG (0.5 mm²)	

Job Name:	Model Numbers:	
Job Number:		

Contact Closure Inputs

Specifications

- Inputs must be dry contact closure, solid-state, open collector, or active-low (NPN)/active-high (PNP) output.
  - Open collector NPN or active-low on-state voltage must be less than 2 V⎓ and sink 3.0 mA
  - Open collector PNP or active-high on-state voltage must be greater than 12 V⎓ and source 3.0 mA
- Wallstation is miswire protected up to 36 V⎓.
- Outputs must stay in the closed or open states for at least 40 msec in order to be recognized by the wallstation.

Contact Closure Input Wiring

- Use low-voltage SELV/PELV/NEC® Class 2 wiring to connect the contact closure inputs to the wallstation.

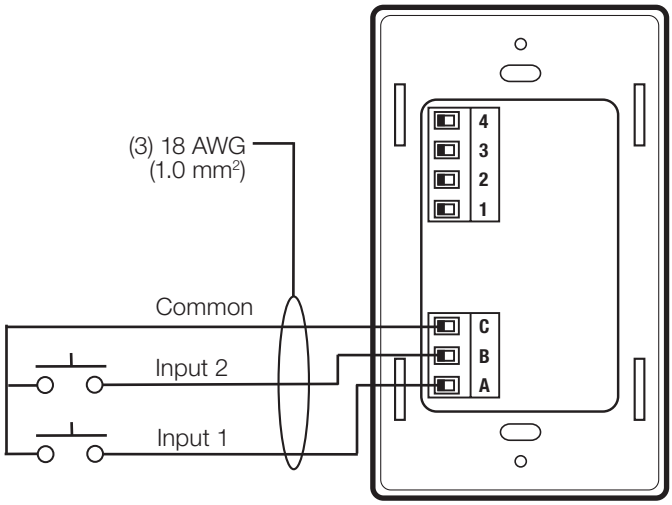

Back View

Lutron, Lutron, GRAFIK Eye, Nova T☆, Quantum, Satin Colors, seeTouch, Sivoia, Energi Savr Node, and Vareo are trademarks or registered trademarks of Lutron Electronics Co., Inc. in the US and/or other countries.
NEC is a registered trademark of National Fire Protection Association, Quincy, Massachusetts.

Job Name:	Model Numbers:	
Job Number:		

369262i 1 03.24.16

Radio Powr Savr™ Wireless Daylight Sensor

The Lutron® wireless daylight sensor is a battery-powered sensor that automatically controls lights via RF communication to compatible dimming or switching devices. This sensor mounts to the ceiling and measures light in the space. The sensor then transmits the light level to the associated dimming or switching devices that automatically control the lights to balance light level in the space. The sensor combines both convenience and exceptional energy savings potential along with ease of installation.

Features

- Wireless daylight sensor has simple calibration.
- Daylight compensation through Lutron® reliable open loop control.
- Designed to give a linear response to changes in viewed light level.
- Light range 0 to 1600 lx (0 to 150 fc).
- Uses Clear Connect® technology.
- Works with Radio Powr Savr™ occupancy/vacancy sensors and Pico® wireless controls.
- Intuitive test mode provides instant system verification.
- Multiple ceiling-mount methods available for different ceiling materials.
- Front accessible test buttons make setup easy.
- 10-year battery life.
- RoHS compliant.

Model Number

LRFX-DCRB-WH

- Color Code
- Frequency/Channel Code

Frequency/Channel Codes

2 = 431.0 – 437.0 MHz (U.S.A., Canada, Mexico, Brazil)
3 = 868.125 – 869.850 MHz (Europe, U.A.E.)
4 = 868.125 – 868.475 MHz (China, Singapore)
5 = 865.5 – 866.5 MHz (India)
6 = 312.3 – 314.8 MHz (Japan)
7 = 433.05 – 434.79 MHz (Hong Kong, Macau)

Color Code

WH = White

Compatible RF Devices

- For use with Lutron® products only.
- Communicates to various wireless Lutron® systems*.

* *Contact Lutron® Customer Service at www.lutron.com for frequency/channel code compatibility with your particular geographic region, and for integrating with other Lutron® lighting and shading products.*

Job Name:	Model Numbers:	
Job Number:		

Specifications

Regulatory

Lutron® Quality Systems Registered to ISO 9001:2008

Standards

LRF2-

- FCC certified
- IC certified
- COFETEL
- ANATEL
- ASEP
- CRC
- SUBTEL
- SUPERTEL
- SUTEL
- Meets CA (U.S.A.) Energy Commission Title 24 requirements
- cULus Listed

LRF3-

- CE Marked (European Union)
- TRA Type Approved (United Arab Emirates)
- CITC (Kingdom of Saudi Arabia)

LRF4-

- SRRC Type Approved (Mainland China)
- iDA Registered (Singapore)

LRF5-

- WPC Type Approved (India)

LRF6-

- 007YUUL0688

LRF7-

- FCC certified

Power / Performance

- Operating voltage: 3 V⎓
- Operating current: 7 µA
- Requires one CR 2450 lithium battery
- 10-year battery life
- Non-volatile memory (settings are stored during power loss)

Enviroment

- Temperature: 32 °F to 104 °F (0 °C to 40 °C)
- For indoor use only
- Relative humidity: < 90% non-condensing

Range

- **LRF2-, LRF3-, LRF4-, LRF5-, LRF7-**
  Local load controls must be located within 60 ft (18 m) line of sight, or 30 ft (9 m) through walls, of a sensor.
- **LRF6-**
  Local load controls must be located within 23 ft (7 m) through walls of a sensor.

Dimensions

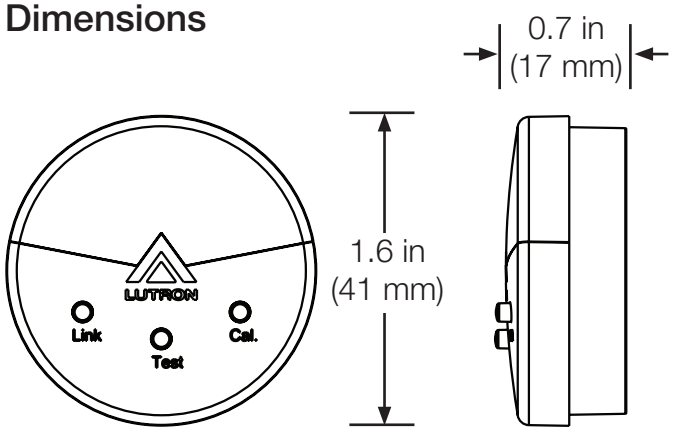

Job Name:	Model Numbers:	
Job Number:		

Mounting

Location for average size areas

Arrow points towards the area viewed by the sensor (towards windows).

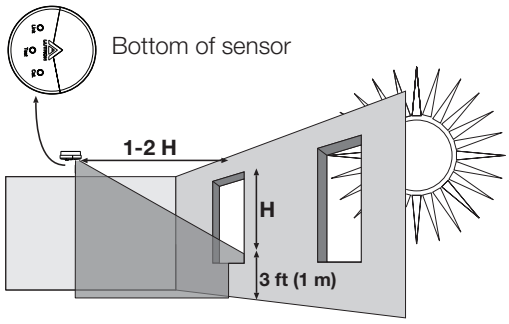

H = Effective Window Height

Location for narrow areas (corridors, private offices)

Arrow points towards the area viewed by the sensor (away from window)

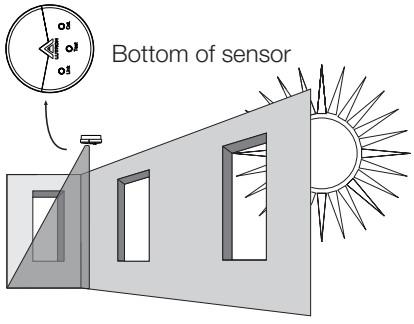

Installation Overview

Determine the Daylight Sensor mounting location using the diagrams at left:

- The arrow on the daylight sensor points toward the area viewed by the sensor.
- Place the daylight sensor so the arrow is pointed at the nearest window at a distance from the window of one to two times the effective window height (H).
- The effective window height (H) starts at the window sill or 3 ft (1 m) up from the floor, whichever is higher, and ends at the top of the window.
- Ensure that the view of the daylight sensor is not obstructed (e.g. ceiling fans or pendant fixtures).
- Do not position the daylight sensor above an electric light that shines up at the ceiling or at the sensor.
- Do not position the daylight sensor in the well of a skylight or above indirect lighting fixtures.
- For narrow areas where the daylight sensor cannot be placed 1-2 (H) from windows, place sensor near windows facing into the space.
- Mount sensor(s) away from large metal surfaces (e.g. light fixtures or metal-backed ceiling tiles). Metal objects will affect the RF performance of the sensor.
- For detailed and application specific mounting information, please see "Daylight Sensor Design and Application Guide" (P/N 3683587) at www.lutron.com/TechnicalDocumentLibrary/3683587_Daylight_Sensor_Design_and_App_Guide_sg.pdf

Job Name:	Model Numbers:	
Job Number:		

369480j 1 04.23.20

Radio Powr Savr Wireless Occupancy/Vacancy Ceiling Sensor

Lutron Radio Powr Savr occupancy/vacancy sensors are wireless, battery-powered, passive infrared (PIR) sensors that automatically control lights via RF communication to compatible dimming and switching devices. These sensors detect the heat (IR radiation of 9.5 µm) from people moving within an area to determine when the space is occupied. The sensors then wirelessly transmit the appropriate commands to the associated dimming and switching devices to turn the lights on or off automatically. They combine both convenience and exceptional energy savings potential along with ease of installation.

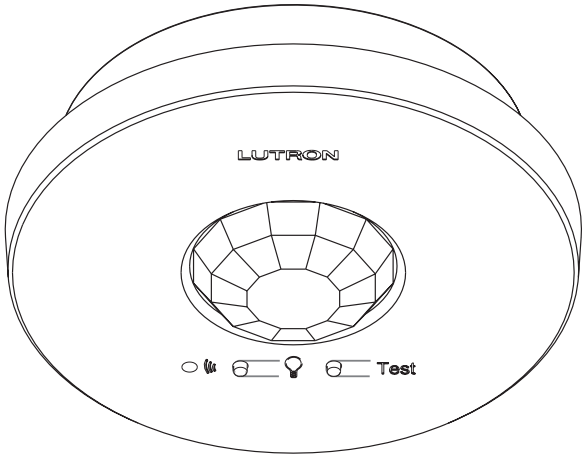

Features

- Wireless occupancy sensor has 3 settings available: Auto-On/Auto-Off, Auto-On Low-Light/Auto-Off, and Manual-On/Auto-Off
- Auto-On Low-Light feature will turn lights on automatically only if there is less than approximately 10 Lux (1 fc) of ambient light
- Vacancy-only model available to meet California (U.S.A.) Title 24 requirements
- Uses Clear Connect technology
- Passive infrared motion detection with exclusive Lutron XCT Technology for fine motion detection
- 360° coverage ranges from 324 ft^2 (30.2 m^2) to 676 ft^2 (62.4 m^2), depending on mounting height
- Simple and intuitive adjustments available for Timeout, Auto-On, and Activity settings
- Supports advanced occupancy features, such as dependent occupancy groups and customizable occupied/unoccupied presets in some systems
- Multiple sensors can be added for extended coverage. Refer to product specification submittal of receiving device to determine system limits
- Lens illuminates during test mode to verify ideal locations
- Multiple ceiling-mount methods available for different ceiling materials
- Front accessible test buttons make programming easy
- 10-year battery life design
- RoHS compliant

Models Available

- LRF__-OCR2B-P-WH
  - Color Code
  - Occupancy and Vacancy
  - Frequency/Channel Code
- LRF2-VCR2B-P-WH
  - Vacancy Only
  - Available for Channel Code 2 Only

Frequency/Channel Codes

Available

2 = 431.0–437.0 MHz (U.S.A., Canada, Mexico, Brazil)
3 = 868.125–869.850 MHz (Europe, U.A.E.)
4 = 868.125–868.4755 MHz (China, Singapore)
5 = 865.5–866.5 MHz (India)
6 = 312.3–314.8 MHz (Japan)
7 = 433.05–434.79 MHz (Hong Kong, Macau)

Color Code

WH = White

Compatible RF Devices

- For use with Lutron products only
- Supports simultaneous association with multiple Lutron Clear Connect devices and/or systems*

* Contact Lutron Customer Service at www.lutron.com/support for frequency/channel code compatibility with your particular geographic region, and for integrating with other Lutron lighting and shading products.

Job Name:	Model Numbers:	
Job Number:		

Specifications

Regulatory

- Lutron Quality Systems Registered to ISO 9001:2008

Regulatory Approvals

LRF2- (USA and Canada)

- cULus Listed
- FCC certified
- IC certified
- Meets CA (U.S.A.) Energy Commission Title 24 requirements
- COFETEL certified
- ANATEL certified
- SUTEL certified

LRF3-

- CE marked (European Union)
- TRA type approval (United Arab Emirates)
- CITC type approval (Saudi Arabia)

LRF4-

- SRRC type approval (Mainland China)
- iDA registered (Singapore)

LRF5-

- WPC Type (India)

LRF6-

- 007YUUL0689

LRF7-

- FCC

Power / Performance

- Operating voltage: 3 V⎓
- Operating current: 14 µA nominal
- Requires one CR 123 lithium battery
- 10-year battery life
- Non-volatile memory (saved changes are stored during power loss)

Environment

- Temperature: 32 ˚F to 104 ˚F (0 ˚C to 40 ˚C)
- For indoor use only
- Relative humidity: less than 90% non-condensing

Warranty

- 5-Year Limited Warranty. For additional Warranty information, please visit www.lutron.com/TechnicalDocumentLibrary/Sensor_Warranty.pdf

RF Range

LRF2-, LRF3-, LRF4-, LRF5-, LRF7-

Local load controls must be located within 60 ft (18 m) line-of-sight, or 30 ft (9 m) through walls, of a sensor.

LRF6-

Local load controls must be located within 40 ft (12.2 m) line-of-sight, or 23 ft (7 m) through walls, of a sensor.

Sensor Coverage Test

- Front accessible test button
- Lens illuminates orange in response to motion during test mode and is visible from 60 ft (18 m)

Wireless Communication Test

- Front accessible test button
- Turn associated loads on and off

Timeout Options

- 1 minute*
- 5 minutes
- 15 minutes (default setting)
- 30 minutes

Auto-On Options (Occupancy Versions Only)

- *Enabled*: Sensor turns lights ON and OFF automatically (default setting).
- *Low Light*: Sensor turns lights ON automatically only in low ambient light conditions; sensor turns lights OFF automatically.
- *Disabled***: Lights must be turned ON manually from dimming or switching device; sensor turns lights OFF automatically.

Activity Options

- *Low Activity*: (default setting)
- *Medium Activity*:
- *High Activity*:

* Intended for use in high-activity, briefly occupied areas only.

** During the 15-second grace period that begins when the lights are automatically turned off, the lights will automatically turn back on in response to motion. This grace period is provided as a safety and convenience feature in the event the lights turn off while the room is still occupied, so that the user does not need to manually turn the lights back on. After 15 seconds, the grace period expires and the lights must be manually turned on.

Job Name:	Model Numbers:	
Job Number:		

Installation Overview

Sensor Setup

- Sensor setup is available as a service by Lutron. For more information see the Sensor Layout and Tuning service document (Lutron P/N 3601235).

Sensor Placement

- To detect motion, the sensor requires line-of-sight of room occupants. The sensor must have an unobstructed view of the room. DO NOT mount behind or near tall cabinets, shelves, hanging fixtures, ceiling fans, etc. The sensor cannot see through glass objects such as patio- or shower doors.
- Hot objects and moving air currents can affect the performance of the sensor. To ensure proper operation, the sensor should be mounted at least 4 ft (1.2 m) away from HVAC vents and halogen or incandescent bulbs that are below the ceiling line.
- The performance of the sensor depends on a temperature differential between the ambient room temperature and that of room occupants. Warmer rooms may reduce the ability of the sensor to detect occupants.
- Devices emitting Radio Frequency (RF) energy can affect the performance of sensors. To ensure proper operation, sensors should be mounted at least 4 ft (1.2 m) away from devices that emit radio waves (e.g., microwave ovens, wireless routers, or other non-Clear Connect wireless devices). When using Clear Connect - Type X lamps or fixtures, ensure sensor is mounted at a distance of 2 ft (0.6 m) or greater from the lamp or fixture.
- For additional information on placing sensors, please see the Occupancy/Vacancy Sensor Design and Application Guide (P/N 368-3197) located at www.lutron.com

Mounting

Temporary mounting is optional to test sensor coverage and wireless communication before permanently installing the sensor.

Drop Ceiling (Compressed Fiber Ceiling Tile)

The mounting wire is provided for both temporary and permanent mounting of the sensor to ceiling tiles. It is designed to allow temporary mounting, testing, and repositioning (if necessary) of the sensor without damaging a ceiling tile. Once the final position of the sensor has been chosen, the mounting wire should be twisted together to permanently secure the sensor in place.

Solid Ceiling (Drywall, Plaster, Concrete, or Wood)

- Temporary mounting: Ten (10) temporary mounting strips can be purchased in the kit, L-CMDPIRKIT, for temporarily mounting and testing the sensor.
- Permanent mounting: Screws and anchors (for drywall or plaster) provided to mount the sensor.

Recess-Mount

- Do not recess-mount sensor in a metal surface.
- Recess-mounting ring requires an opening of 3 in (76 mm) in diameter.
- Recess-mounting ring secures internally to ceiling. Sensor twists into the recess mounting ring and sits flush with ceiling (see image below).
- Recess-mounting ring purchased as a separate kit: L-CRMK-WH.

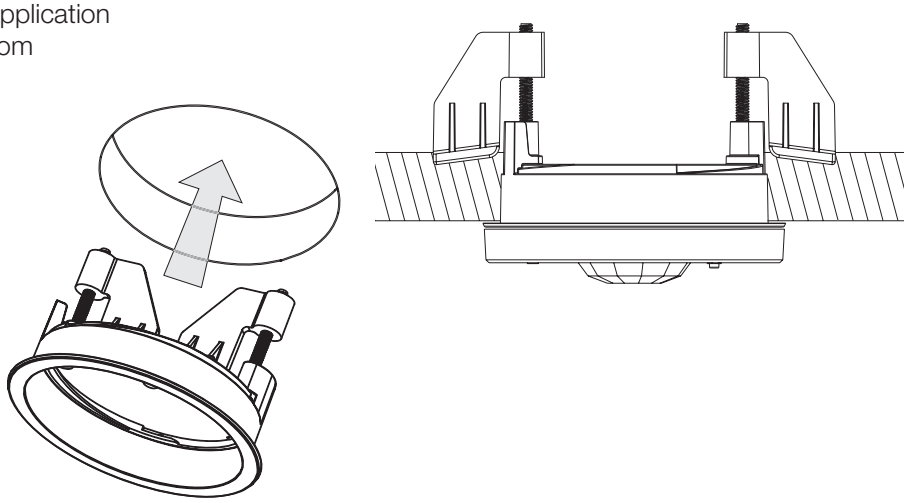

Job Name:	Model Numbers:	
Job Number:		

Dimensions

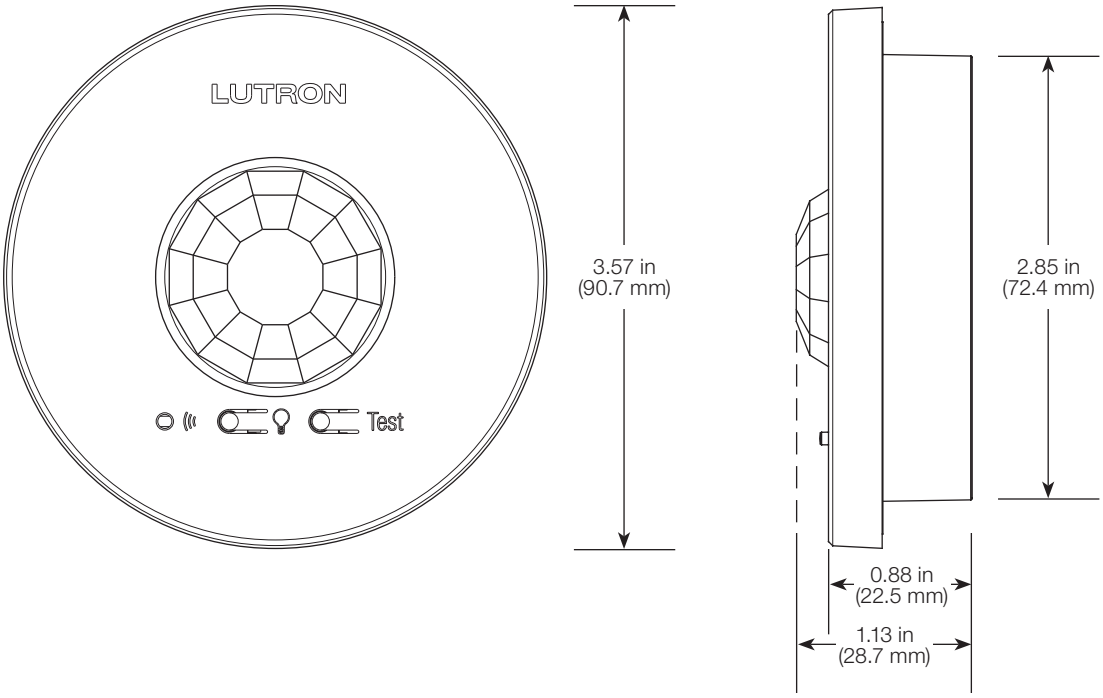

Job Name:	Model Numbers:	
Job Number:		

Coverage Diagrams

Per NEMA WD7 test method

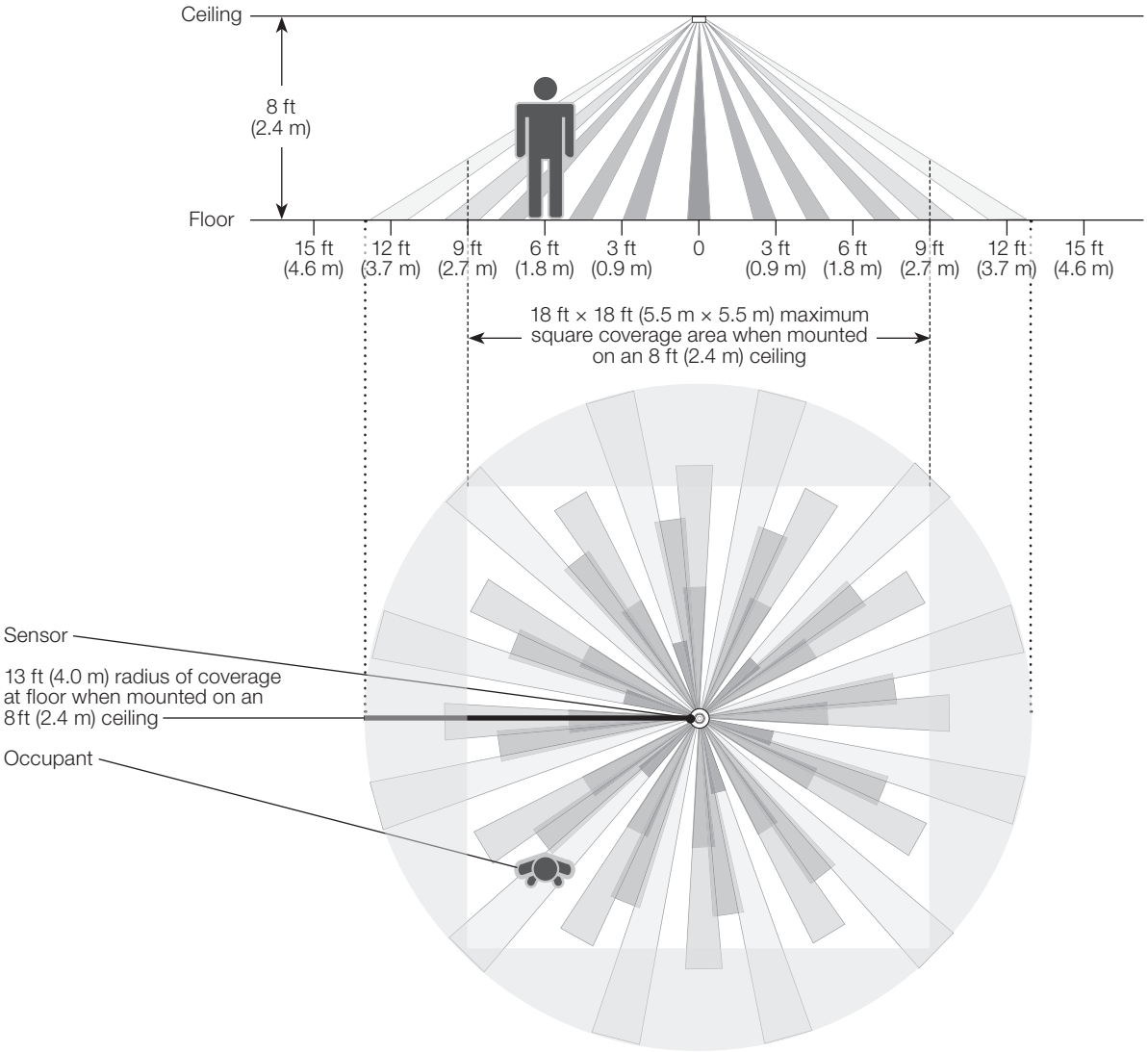

Sensor Coverage Chart (for sensor mounted in center of room)

Ceiling Height	Maximum Square Coverage Area*	
8 ft (2.4 m)	18 ft × 18 ft (5.5 m × 5.5 m)	324 ft^2 (30.2 m^2)
9 ft (2.7 m)	20 ft × 20 ft (6.1 m × 6.1 m)	400 ft^2 (37.2 m^2)
10 ft (3.0 m)	22 ft × 22 ft (6.7 m × 6.7 m)	484 ft^2 (44.9 m^2)
12 ft (3.7 m)	26 ft × 26 ft (7.9 m × 7.9 m)	676 ft^2 (62.4 m^2)

* 12 ft (3.7 m) is the recommended maximum mounting height

Lens Masking

Whenever possible, the sensor should be installed in a location where it cannot view areas outside the intended space, such as hallways or adjacent rooms. If this situation cannot be avoided, portions of the lens may be masked to block the view of the sensor into undesired areas. Ten (10) PIR Lens Masks may be purchased in the kit, L-CMDPIRKIT.

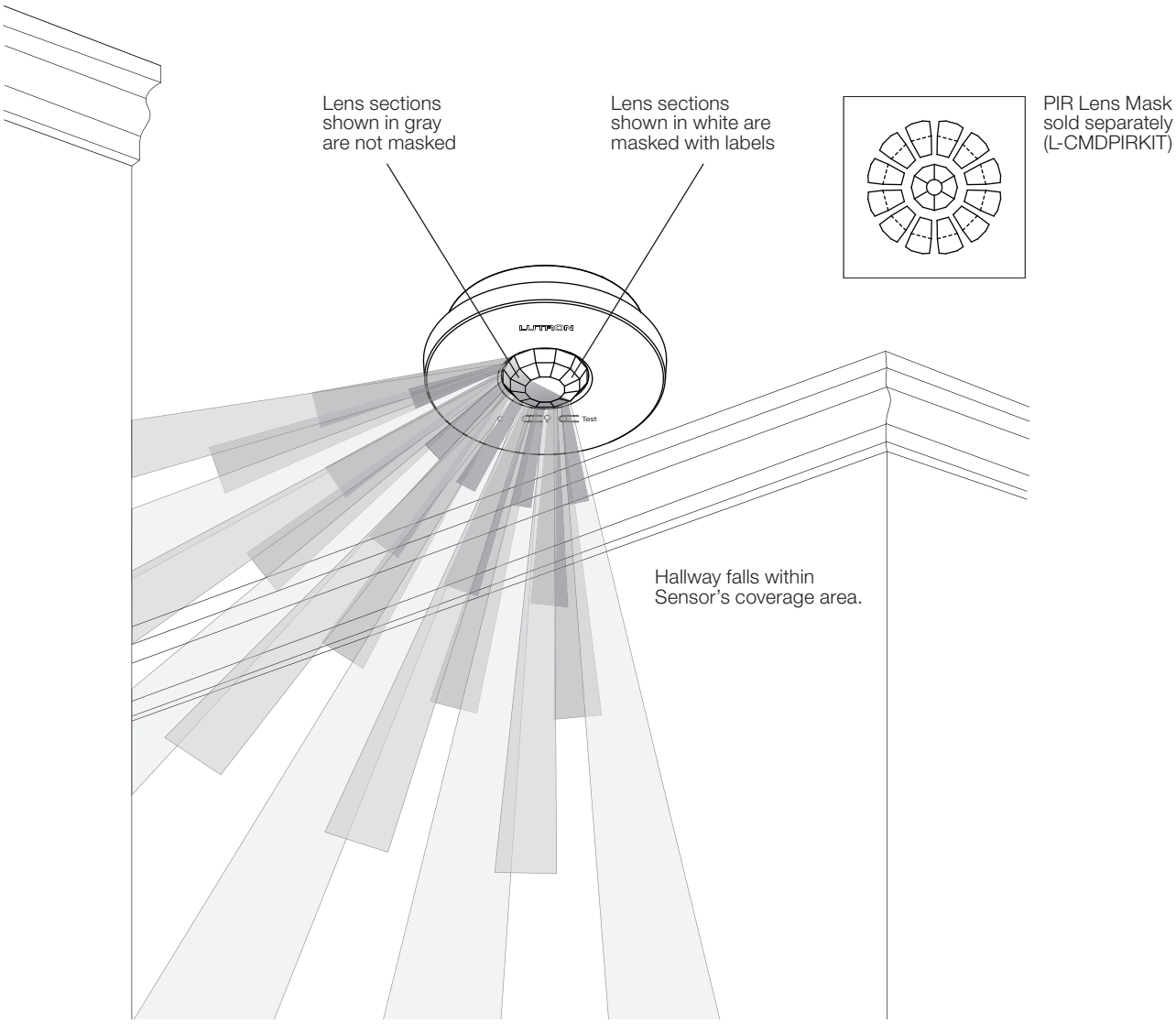

Lutron, Lutron, Clear Connect, Radio Powr Savr and XCT are trademarks or registered trademarks of Lutron Electronics Co., Inc. in the US and/or other countries.

Job Name:	Model Numbers:	
Job Number:		

369299e 1 06.28.19

LUT-ELI-3PH Emergency Lighting Interface

The LUT-ELI-3PH is a device that works with Lutron lighting controls to provide an emergency lighting solution. The device is capable of sensing normal (non-essential) line voltage power and accepting an output from a fire alarm control panel (FACP). Upon loss of normal power or receiving a signal from the FACP, the LUT-ELI-3PH will send a signal to the compatible Lutron control(s) to which it is connected. This signal will cause the controls to enter the emergency lighting mode and any lights controlled will go to the emergency light level setting.

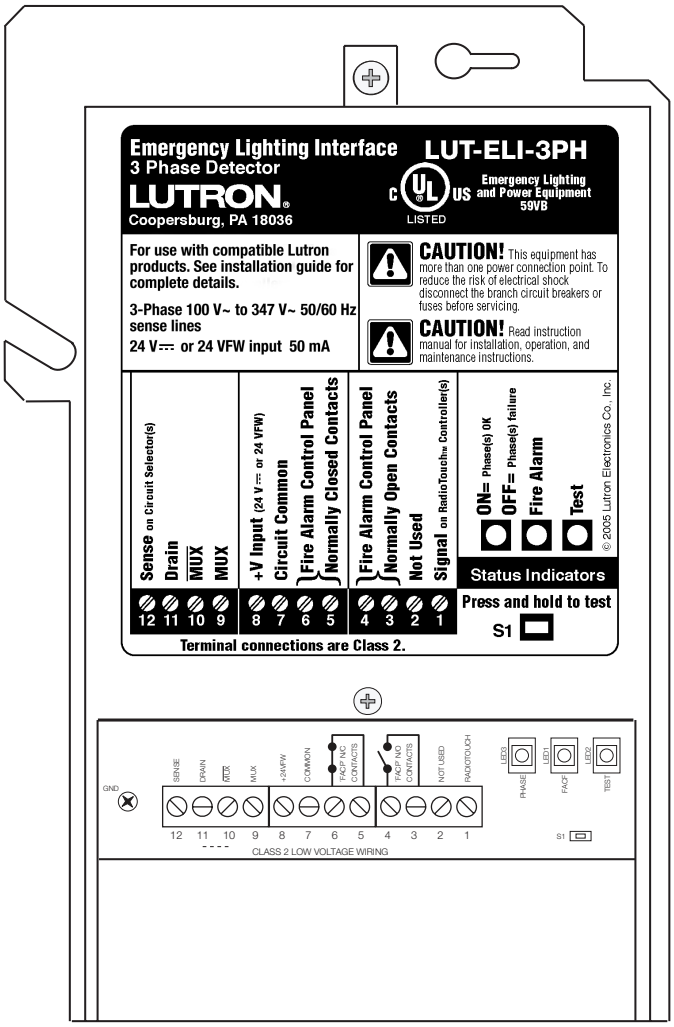

Features

- Compatible Lutron controls
  - GP, LP, LCP, XP, XPS, CCP, CXP, and HS
  - Energi Savr Node units
  - GRAFIK Eye QS units
  - Quantum lighting management hubs with EcoSystem bus supplies
- UL® 924 & CSA C22.2 No. 141-02 listed as “Emergency Lighting and Power Equipment”
- Requires a 24 V⎓ power feed from a source on normal/emergency (essential) power for unit to operate.
- Status light indicates the phase status. Status light “ON” is normal mode, “OFF” is emergency mode.
- A test button is provided to perform a functional test of the system by simulating an emergency situation.
- Accepts a maintained dry contact closure from an FACP to actuate the emergency mode.
- Senses line voltage from 100–347 V∼.

Job Name:	Model Numbers:	
Job Number:		

Specifications

Regulatory Approvals

- Complies with requirements for use in other spaces used for environmental air (plenums) per NEC® 2014 300.22(C)(3)
- Meets the Canadian National Building Code plenum requirements for a concealed space used as a plenum within a floor or roof assembly
- cULus Listed - USA & Canada
- NOM Certified (LUT-ELI-3PH-S only) - Mexico
- Lutron Quality Systems registered to ISO 9001.2000

Power

- Sense voltage input to the LUT-ELI-3PH unit must be from the Normal (Non-Essential) power source.
- Sense voltage range: 100–347 V∼ 50/60 Hz 30 mA, 1-Phase, 3-Phase, or split phase.
- Proper short-circuit and over-current protection must be provided at the distribution panel. A 20 A maximum circuit breaker may be used for the installation.

Environment

- Ambient Temperature Operating Range: 32 °F–104 °F (0 °C–40 °C).
- Relative humidity: less than 90% non-condensing.
- For indoor use only.

Inputs

- 2 inputs for an FACP. A normally open or normally closed dry contact input on the FACP inputs will activate the emergency mode.

Status Light

- Status light indicates the phase status. Status light “ON” is normal mode, “OFF” is emergency mode.

Test Button

- A test button is provided to perform a functional test of the system by simulating an emergency situation.

System Communications and Capacity

- May be added to an existing Lutron system.
- One LUT-ELI-3PH unit may be used with up to 32 circuit selectors, specification-grade panel interfaces (SPI) or LCD controllers, Energi Savr Node units, GRAFIK Eye QS units, or Quantum bus supplies mixed in any combination.
- There can be up to 4 Quantum bus supplies in a Quantum hub. Only 1 Quantum bus supply per hub needs to be connected per LUT-ELI-3PH unit. There can be up to 32 Quantum bus supplies connected to one LUT-ELI-3PH unit.

Mounting

- The interface mounts to a standard 4 x 4 in (102 x 102 mm) junction box.

Job Name:	Model Numbers:	
Job Number:		

Dimensions and Mounting

All dimensions shown as in (mm)

Front View

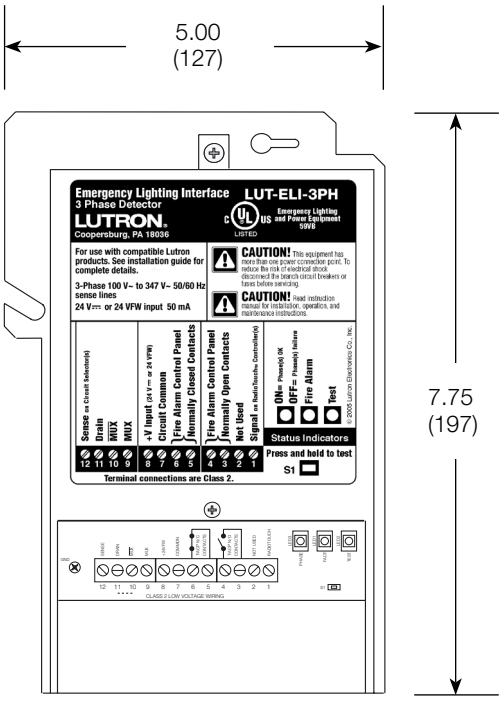

Side View

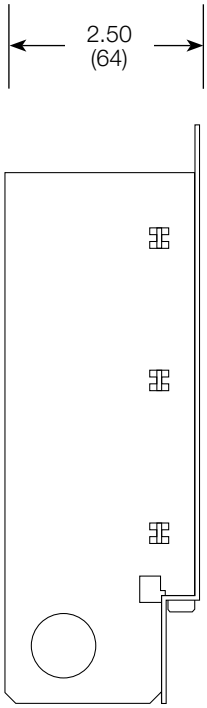

Mounting Example Side View (Cross-Section)

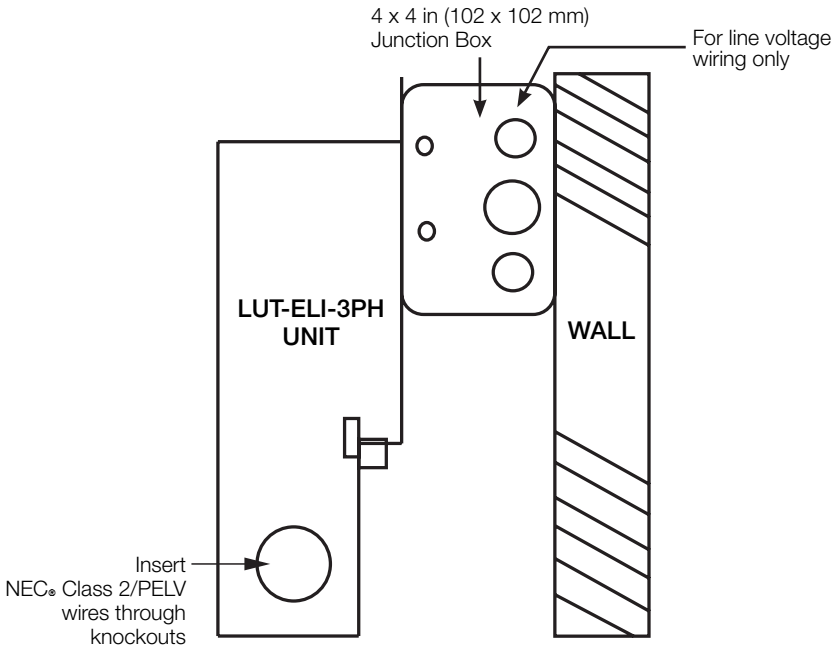

Job Name:	Model Numbers:	
Job Number:		

Line Voltage Wiring Examples:

3-Phase Diagram

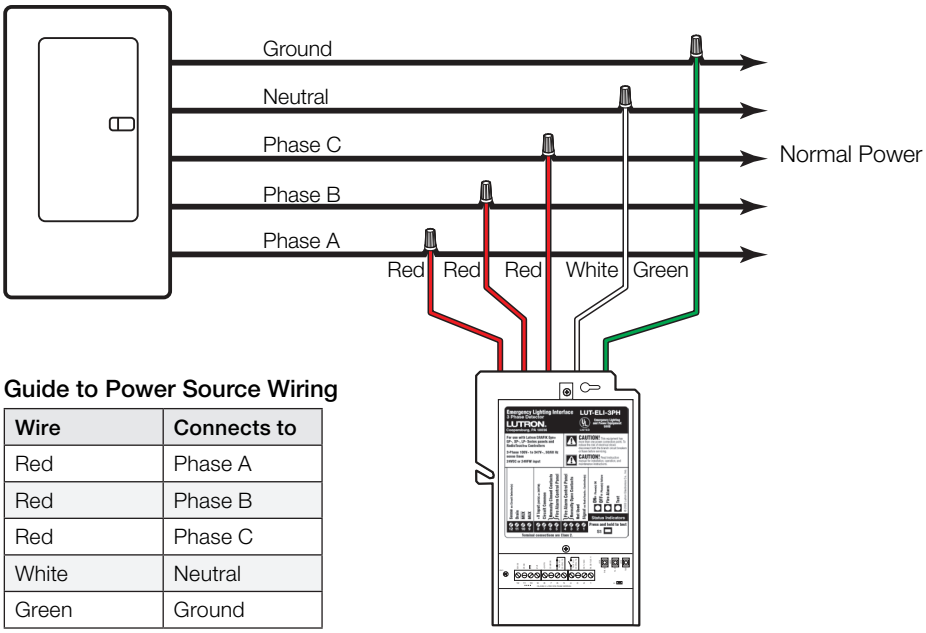

Guide to Power Source Wiring

Wire	Connects to
Red	Phase A
Red	Phase B
Red	Phase C
White	Neutral
Green	Ground

Split Phase Diagram

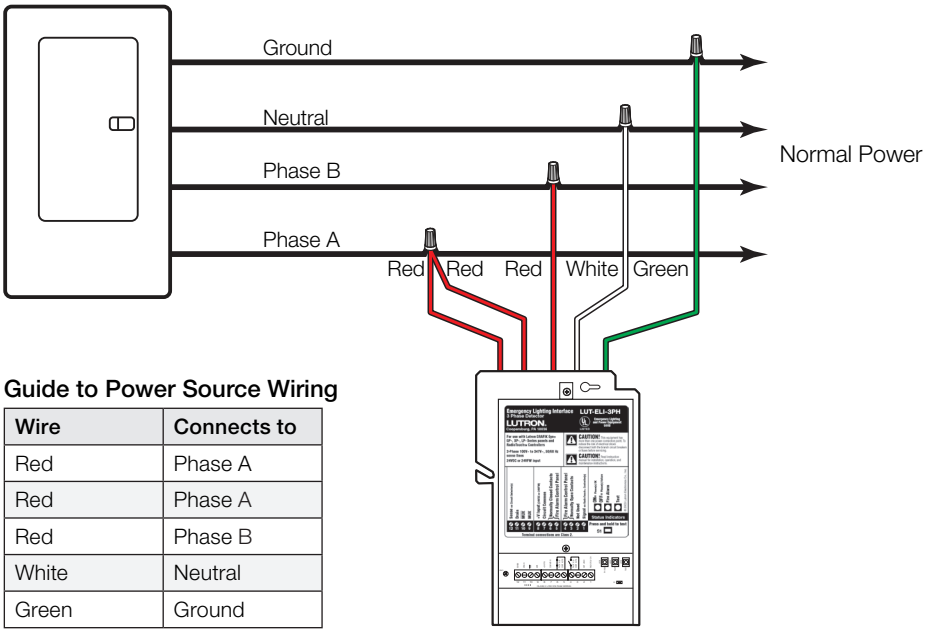

Guide to Power Source Wiring

Wire	Connects to
Red	Phase A
Red	Phase A
Red	Phase B
White	Neutral
Green	Ground

Job Name:	Model Numbers:	
Job Number:		

Line Voltage Wiring Examples: *(continued)*

Single Phase Diagram

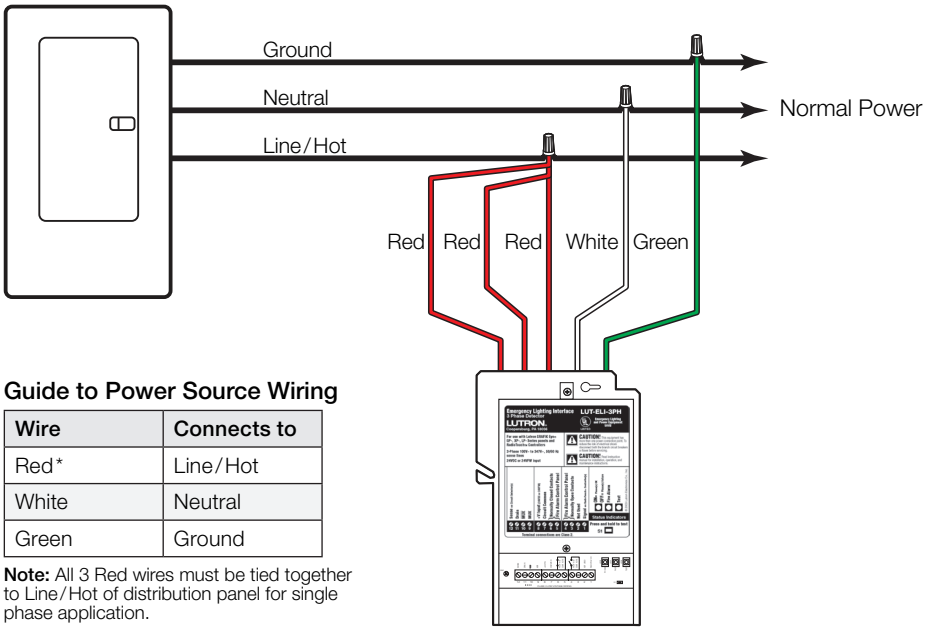

Guide to Power Source Wiring

Wire	Connects to
Red*	Line/Hot
White	Neutral
Green	Ground

* **Note:** All 3 Red wires must be tied together to Line/Hot of distribution panel for single phase application.

Job Name:	Model Numbers:	
Job Number:		

IEC PELV/NEC® Class 2 Wiring Example: GP, XP, LP, CCP, and CXP Panels

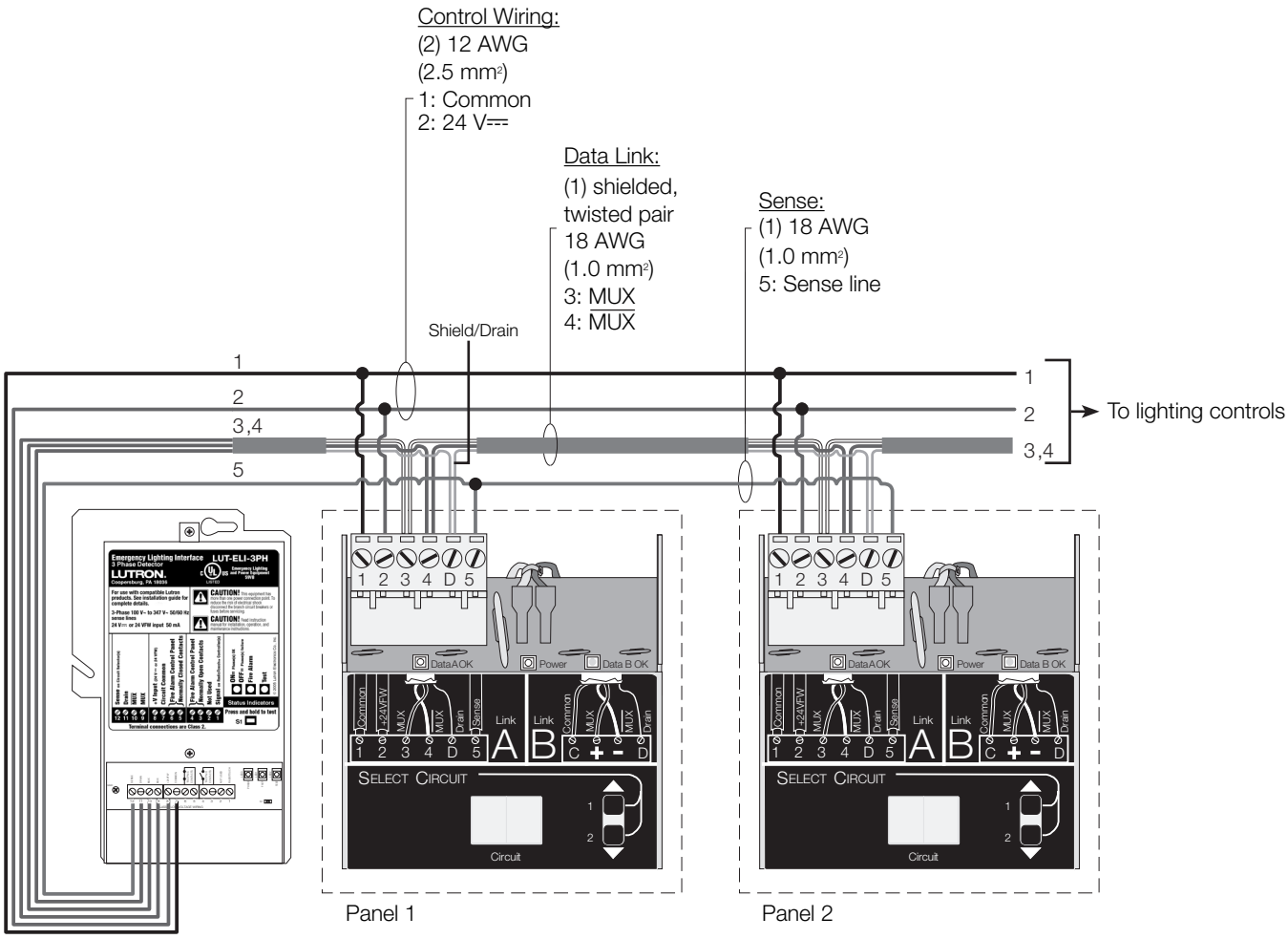

Guide to Wiring

LUT-ELI	Circuit Selector
Pin 12	Pin 5
Pin 11	Pin D
Pin 10	Pin 4
Pin 9	Pin 3
Pin 8	Pin 2
Pin 7	Pin 1

- One LUT-ELI-3PH unit may be connected in parallel with up to 32 circuit selectors.
- A LUT-ELI-3PH unit may be placed anywhere on the power panel link.
- The switch position SW6 on the circuit selector/controller must be in the right-most position, “Essential” on all Emergency Panels.
- The LUT-ELI-3PH unit 24 V⎓ input must always be connected to at least one of the Emergency Panels.

Job Name:	Model Numbers:	
Job Number:		

IEC PELV/NEC® Class 2 Wiring Example: HomeWorks QS Panels with a Specification Grade Interface (SPI)

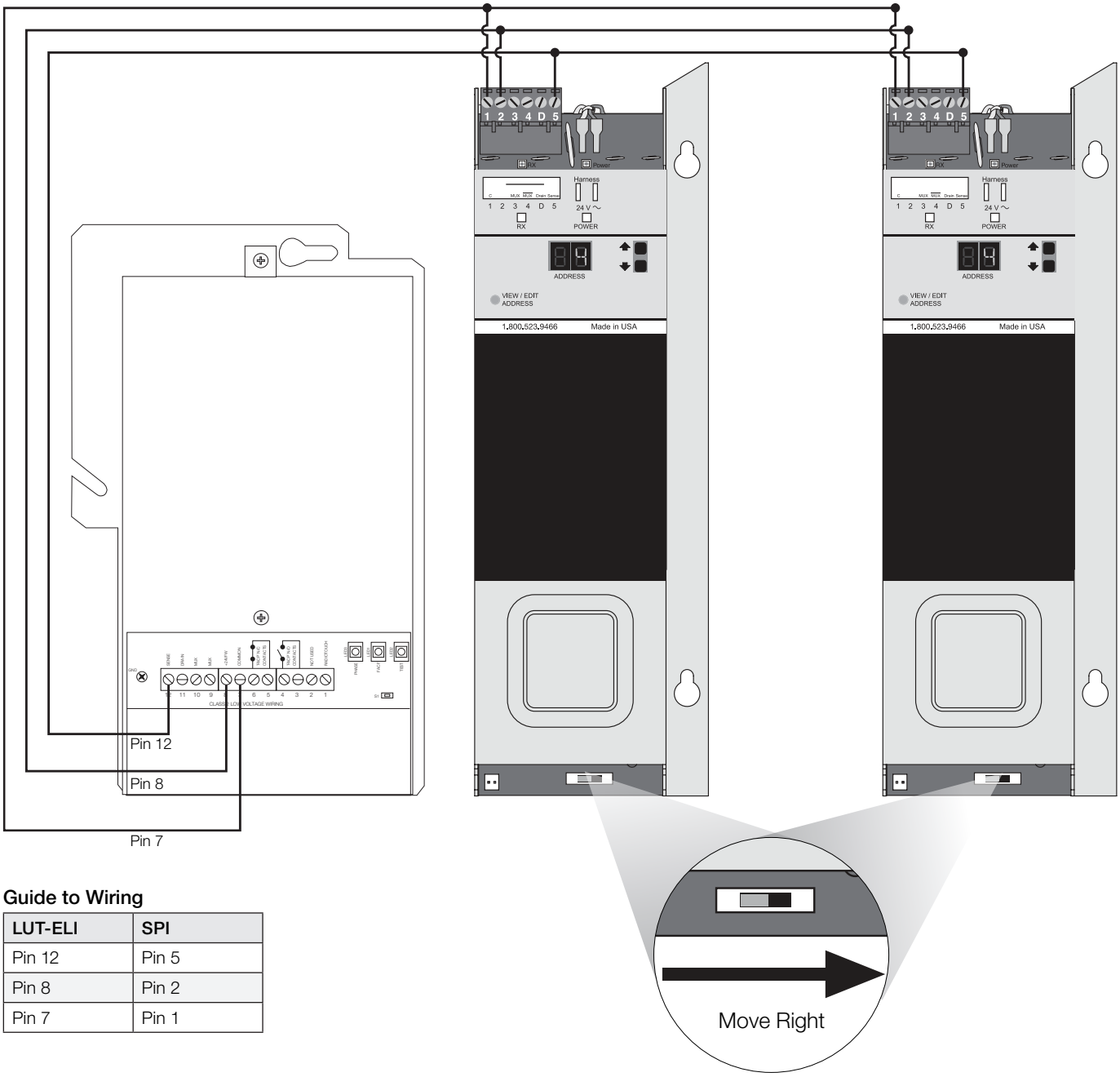

Guide to Wiring

LUT-ELI	SPI
Pin 12	Pin 5
Pin 8	Pin 2
Pin 7	Pin 1

- One LUT-ELI-3PH unit may be connected in parallel with up to 32 SPIs across two panel links.
- A LUT-ELI-3PH unit may be placed anywhere on the power panel link.
- The switch position SW6 on the SPI must be in the right-most position, “Essential” on all Emergency Panels.
- The LUT-ELI-3PH unit 24 V⎓ input must always be connected to at least one of the Emergency Panels.

Job Name:	Model Numbers:	
Job Number:		

IEC PELV/NEC® Class 2 Wiring Example: LCP128 and Softswitch128 (XPS) Panels

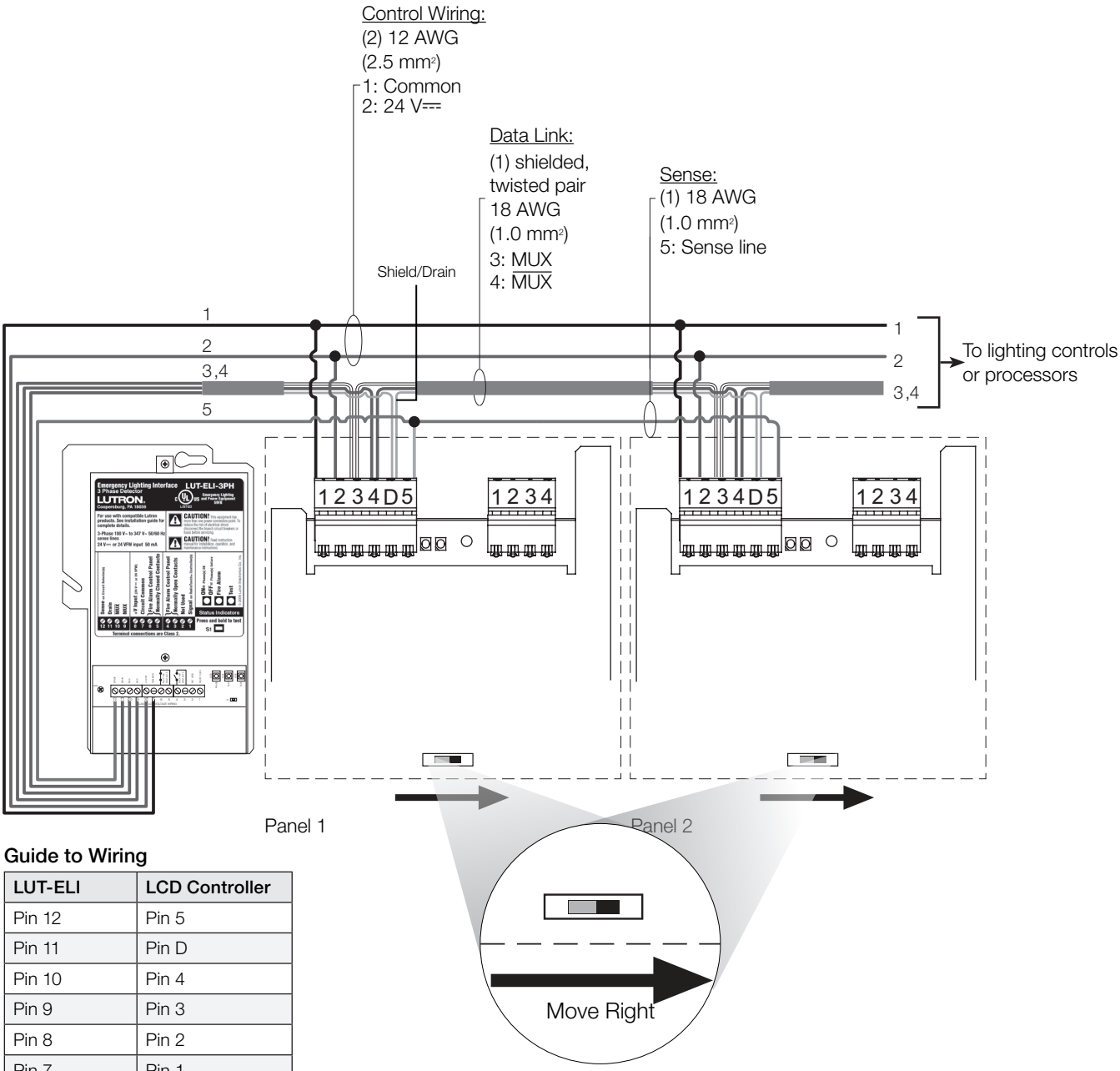

Guide to Wiring

LUT-ELI	LCD Controller
Pin 12	Pin 5
Pin 11	Pin D
Pin 10	Pin 4
Pin 9	Pin 3
Pin 8	Pin 2
Pin 7	Pin 1

- One LUT-ELI-3PH unit may be connected in parallel with up to 32 LCP/XPS controllers.
- A LUT-ELI-3PH unit may be placed anywhere on the power panel link.
- The switch position SW6 on the controller must be in the right-most position, '"Essential" on all Emergency Panels.
- The LUT-ELI-3PH unit 24 V⎓ input must always be connected to at least one of the Emergency Panels.

Job Name:	Model Numbers:	
Job Number:		

Energi Savr Node Units

Using a LUT-ELI-3PH unit with an Energi Savr Node unit ensures that the system is compliant with UL® 924. Follow the wiring diagram in the LUT-ELI-3PH for mains wiring. Use the diagram below to complete the installation. There can be up to 32 Energi Savr Node units connected to one LUT-ELI-3PH unit.

Model QSN-4T16-S is shown below. Check the documentation of your particular model for proper terminal connections.

Wiring to the Energi Savr Node Unit

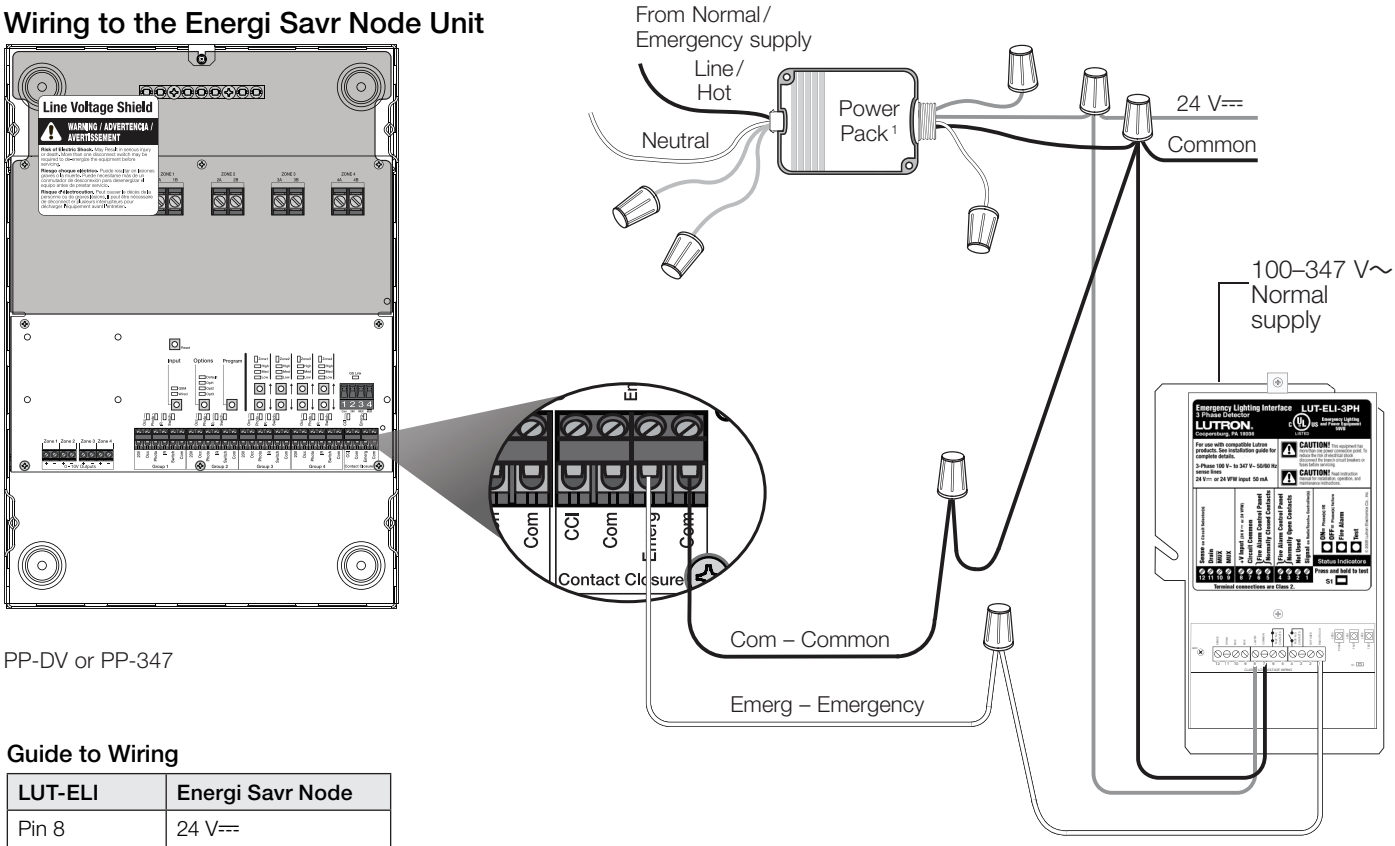

[1] PP-DV or PP-347

Guide to Wiring

LUT-ELI	Energi Savr Node
Pin 8	24 V⎓
Pin 7	Com
Pin 1	Emerg

Wiring Summary:

- Wire the power pack red wire (+24 V) to the LUT-ELI-3PH unit terminal 8 (V+).
- Wire the power pack black wire (Common) to the LUT-ELI-3PH unit terminal 7 (Circuit Common) and to Energi Savr Node “Com” terminal of the Emergency Contact Closure Input.
- Wire the signal wire from the LUT-ELI-3PH unit (terminal 1) to the Energi Savr Node “Emerg” terminal of the Emergency Contact Closure Input.
- When normal power loss is detected, the LUT-ELI-3PH unit sends all programmed zones to emergency light levels (Default is typically 100%).
- When normal power loss is restored, the LUT-ELI-3PH unit causes all programmed zones to return to previous light levels.

Job Name:	Model Numbers:
Job Number:	

Quantum Systems

Using a LUT-ELI-3PH unit with a Quantum bus supply ensures that the system is compliant with UL® 924. Follow the wiring diagram in the LUT-ELI-3PH unit for mains wiring. Use the diagram below to complete the installation. Only 1 bus supply per hub needs to be connected per LUT-ELI-3PH unit. There can be up to 32 Quantum bus supplies connected to one LUT-ELI-3PH unit.

Wiring to Quantum Bus Supply

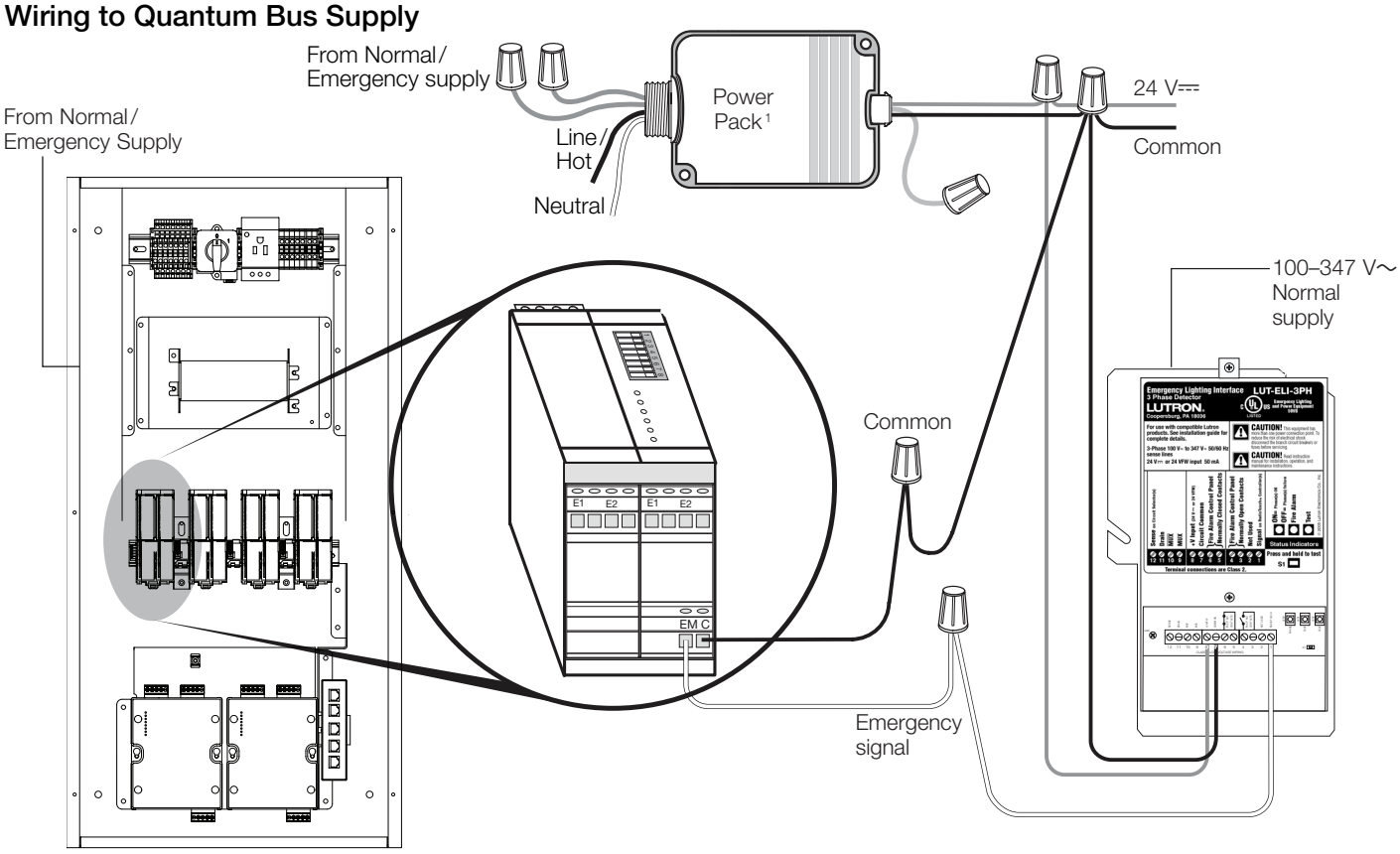

[1] PP-DV or PP-347

Guide to Wiring

LUT-ELI	Bus Supply
Pin 8	24 V⎓
Pin 7	Com
Pin 1	Emerg

Wiring Summary:

- Wire the power pack red wire (+24 V) to the LUT-ELI-3PH unit terminal 8 (+VFW).
- Wire the power pack black wire (Common) to the LUT-ELI-3PH unit terminal 7 (Common) and to the Quantum bus supply terminal 5 (Common).
- Wire the signal wire from the LUT-ELI-3PH unit (terminal 1) to the Quantum bus supply terminal 6 (CCI-Emergency).

Note: When normal power loss is detected, the LUT-ELI-3PH unit sends a signal to the bus supplies which send the programmed lights to emergency light levels.

Job Name:	Model Numbers:	
Job Number:		

Installing a LUT-ELI-3PH Unit with a GRAFIK Eye QS Unit

Wiring to a GRAFIK Eye QS Control Unit

Note: For a 1-phase 2-wire application, connect phase A, B, and C wires on LUT-ELI-3PH together for phase sensing.

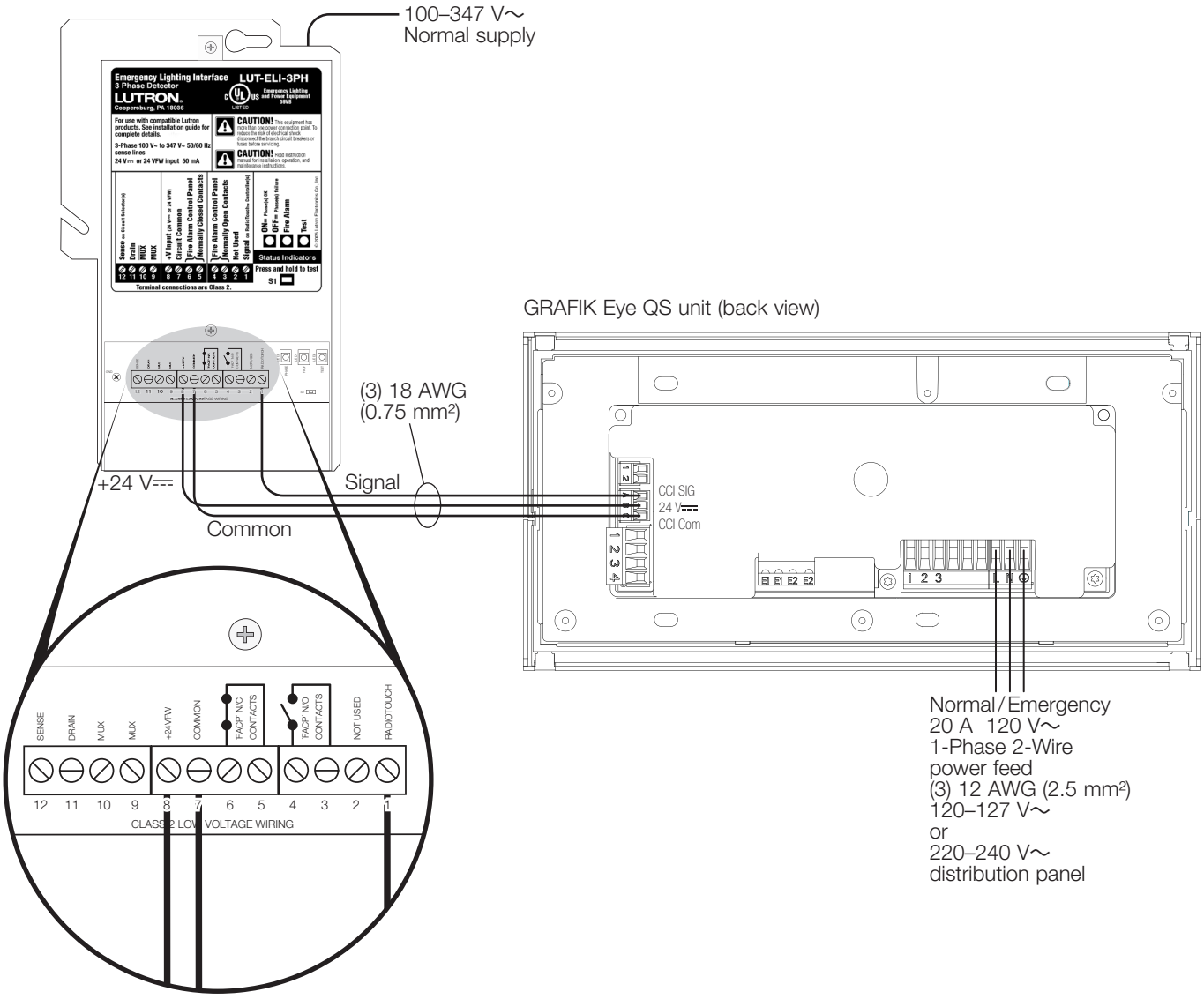

- Provide proper short-circuit and overcurrent protection at the distribution panel. Maximum circuit breaker installation of 20 A.
- When normal power loss is detected at the LUT-ELI-3PH unit, all zones in the GRAFIK Eye QS units will go to their emergency states.
- The GRAFIK Eye QS unit MUST be powered from a normal/emergency power feed.

Job Name:	Model Numbers:	
Job Number:		

IEC PELV/NEC® Class 2 Wiring Example: Fire Alarm Control Panel (FACP)

Normally Open FACP Input

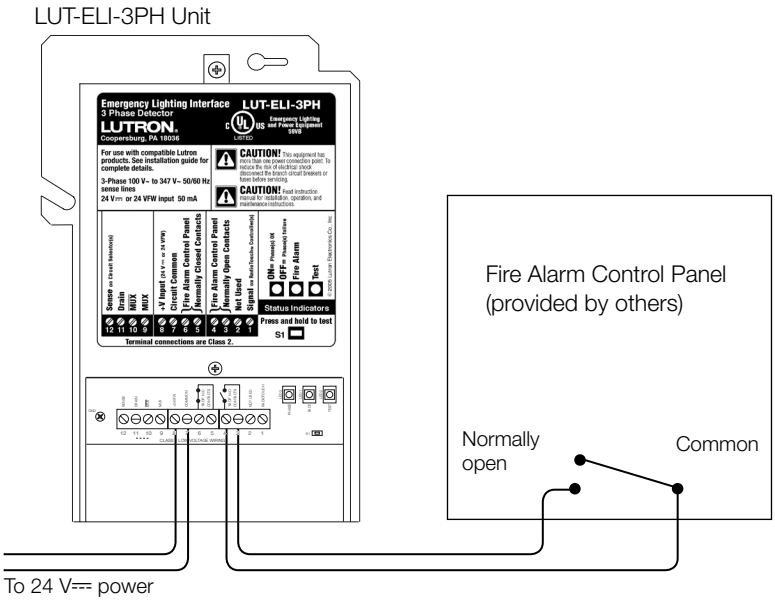

Supervisory Circuit (Normally Closed FACP Input)

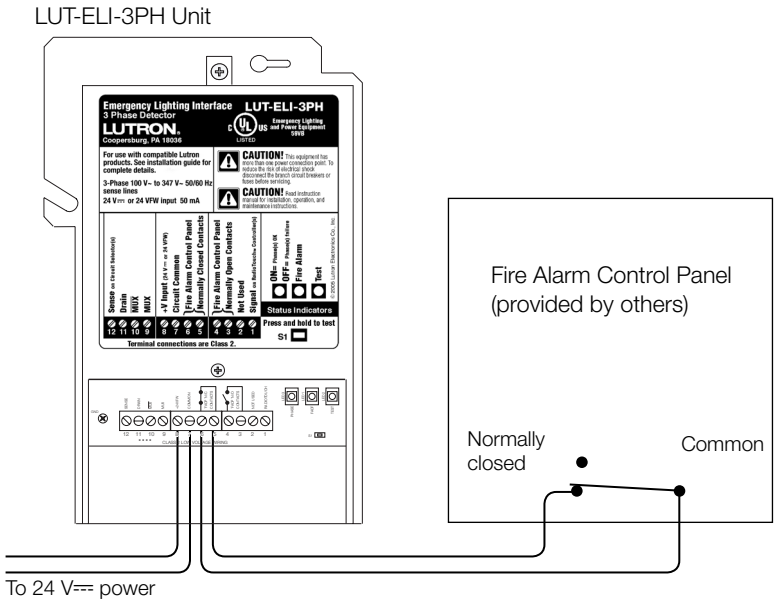

Important

Use only with normally open (terminals 3 and 4) or normally closed (terminals 5 and 6) dry contact closure. When the proper contact state is triggered, it must be maintained for the LUT-ELI-3PH unit to go into Emergency Mode. Once the contact is released, the LUT-ELI-3PH unit will return the GRAFIK Systems GP, LP, XP panel(s), XPS, LCP, RadioTouch controller, EcoSystem Bus Supply, GRAFIK Eye QS unit, or Quantum Bus Supply back to normal operation mode.

The LUT-ELI-3PH unit will have a factory installed jumper to provide the normally closed input signal for the supervisory circuit when a normally closed FACP input is not provided.

Consult your Fire Alarm Control Panel's instruction manual before connecting to the LUT-ELI-3PH unit.

Notice: Do not connect any voltage source to the FACP inputs on the LUT-ELI-3PH unit. If voltage is provided by the FACP and connected to the LUT-ELI-3PH unit, it can damage the LUT-ELI-3PH unit.

Lutron, Lutron, HomeWorks, Energi Savr Node, GRAFIK Eye, Quantum, EcoSystem, LCP128, Softswitch128, and RadioTouch are trademarks or registered trademarks of Lutron Electronics Co., Inc. in the US and/or other countries.

Job Name:	Model Numbers:	
Job Number:		

369373g 1 03.03.21

QSE-CI-NWK-E Control Interface

The QSE-CI-NWK-E is a versatile integration access point for Lutron QS-based systems. Through either RS232 or TCP/IP over Ethernet, third-party devices can control and/or monitor a QS system.

Features

- Easily integrate with touchscreens, PCs, A/V systems, or other digital systems and devices.
- Control and monitor GRAFIK Eye QS, Sivoia QS, Energi Savr Node, and other products on the wired QS link.
- Monitor lighting scenes, levels, shade positions and more. For a full list of commands see Integration Protocol document (P/N 040249) at www.lutron.com
- Up to 10 QSE-CI-NWK-E control interfaces are allowed per QS link.
- The QSE-CI-NWK-E is compatible with Athena, Quantum, QS standalone, and HomeWorks systems. For a complete list of compatible components see the Lutron Integration Protocol document (P/N 040249) at www.lutron.com

Job Name:	Model Numbers:	
Job Number:		

Specifications

Regulatory Approvals

- RoHS Compliant
- CE Marked
- NOM
- cULus

Power

- SELV/PELV/NEC® Class 2
- Operating voltage: 24–36 V⎓ 65 mA

QS Link Limits

- The QS wired communications link is limited to 100 devices and 100 zones. Each QSE-CI-NWK-E control interface counts as 1 device and 0 zones.
- Each QSE-CI-NWK-E control interface consumes 2 Power Draw Units (PDU) on the QS link. Refer to the QS Link Power Draw Units Specification Submittal (P/N 369405) at www.lutron.com for more information.
- The maximum wiring length for the QS link is 2000 ft (610 m).

Environment

- 32 °F to 104 °F (0 °C to 40 °C).
- Relative humidity less than 90% non-condensing.
- Indoor use only.
- Unit generates heat, maximum 8 BTU/hr.

Integration Features

- Monitoring: Current scene, zone level, button presses, shade group levels.
- Control: Scene selection, scene lockout, zone lockout, sequencing, zone raise/lower, master raise/lower, set shade group level, simulate button press/release.

  For the full list of features and commands, please refer to the Integration Protocol document (P/N 040249) at www.lutron.com

Compatible Components

- Compatible with most QS devices. For a complete list of compatible components see Integration Protocol document (P/N 040249) at www.lutron.com

Requirements

- QS Link Power Supply, such as a:
  – GRAFIK Eye QS.
  – QS Link power supply, such as the QSPS-P1-1-50 .
  – Energi Savr Node QS.
- QS Communication Link - SELV/PELV/NEC® Class 2 (see QS Link Wire Sizes table).

Protocol

- Integration Protocol document (P/N 040249) at www.lutron.com

RS232 Connection

- Standard 9-pin female serial connector on interface.
- 50 ft (15 m) maximum serial cable length.
- Dip switches are set at factory, all Off.
- Dip switches are used to set RS232 baud rate:

DIP Switch Settings for RS232 Baud Rate

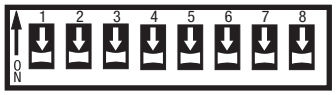

115200 (default)

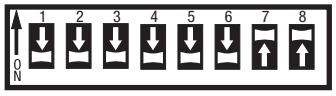

38400

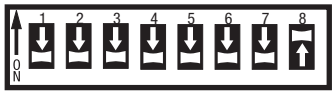

19200

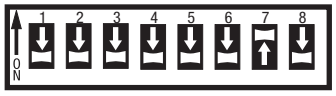

9600

Ethernet Connection

- Standard CAT5 (or better) cable, 328 ft (100 m) maximum, connects the QSE-CI-NWK-E interface to a PC or other Ethernet source.
- Supports MDI/MDIX auto-crossover (no crossover cable needed).
- Auto-negotiation of 10 or 100 Mbps speed and full- or half-duplex operation.
- Default IP address is 192.168.250.1. Can be changed using the Lutron DeviceIP tool.

  Note: Either the RS232 or the Ethernet can be used, but not both.

Job Name:	Model Numbers:	
Job Number:		

Dimensions

Dimensions are in inches (mm)

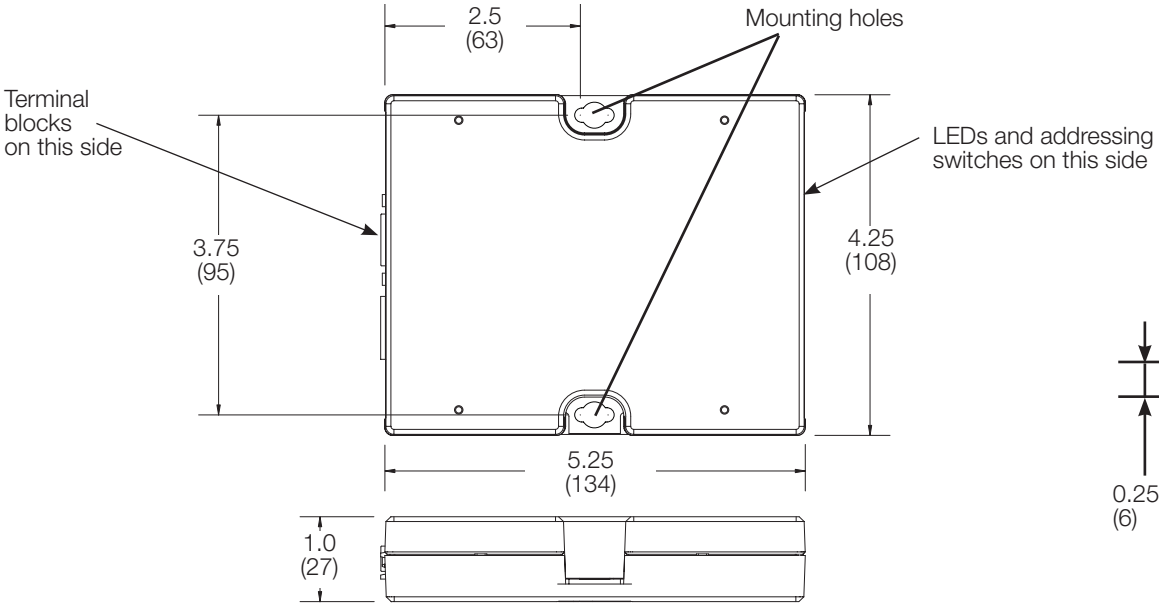

Mounting Hole Detail

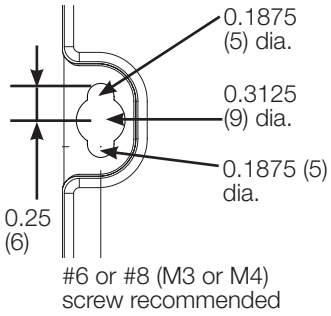

Mounting Options

Mount where terminal blocks, switches, and LEDs are accessible. Strip 3/8 in (10 mm) of insulation from wires. Each data link terminal will accept up to two 18 AWG (1.0 mm^2) wires. Connect wiring as shown on the Wiring page. LED 1 lights continuously (Power) and LED 7 blinks rapidly (Data Link RX) when the SELV/PELV/NEC® Class 2 Data Link is installed correctly. Choose from the following mounting methods:

1 Direct Wall Mounting

Mount the control interface directly on a wall, as shown in Mounting Methods at right, using screws (not included). When mounting, provide sufficient space for connecting cables.

2 Rack Mounting

Place the unit in the LUT-19AV-1U AV rack using screws provided with the unit. The LUT-19AV-1U will hold up to four units.

3 Enclosed Wall Mounting

If conduit is desired for wiring, use the LUT-5x10-ENC to mount one unit.

Mounting Methods

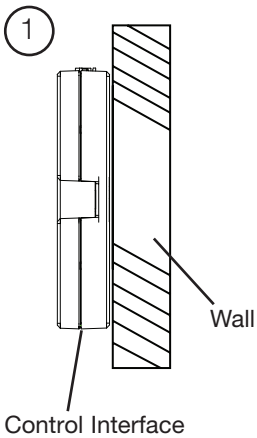

LUT-19AV-1U

LUT-5x10-ENC

Job Name:	Model Numbers:	
Job Number:		

Terminal Locations

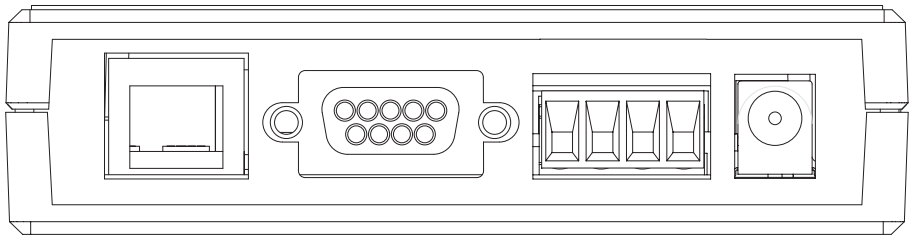

Ethernet Link (to PC or AV Equipment

Female 9-pin RS232 Link (to PC or AV Equipment)

QS Link to other wired QS system Devices

LED and DIP Switch Locations

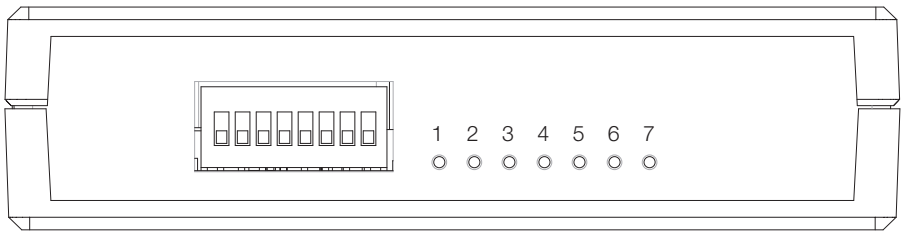

DIP Switches

LED 1: Power
LED 2: Ethernet Activity
LED 3: Unused
LED 4: RS232 Link Tx
LED 5: RS232 Link Rx
LED 6: QS Link Tx
LED 7: QS Link Rx

Job Name:	Model Numbers:	
Job Number:		

Wiring

RS232 Link

- Standard 9-pin serial connector plugs into RS232 equipment, and to QSE-CI-NWK-E.
- Must be 50 ft (15 m) or less.

RS232 Signals

Signals	Pin on 9-Pin Cable
Com	5
TxD	3
RxD	2

Ethernet Link Wiring

- Standard CAT5 cable connects QSE-CI-NWK-E Interface to PC, router, or other Ethernet source.
- No crossover cable needed.
- Must be 328 ft (100 m) or less.
- Ethernet network and cable provided by others.

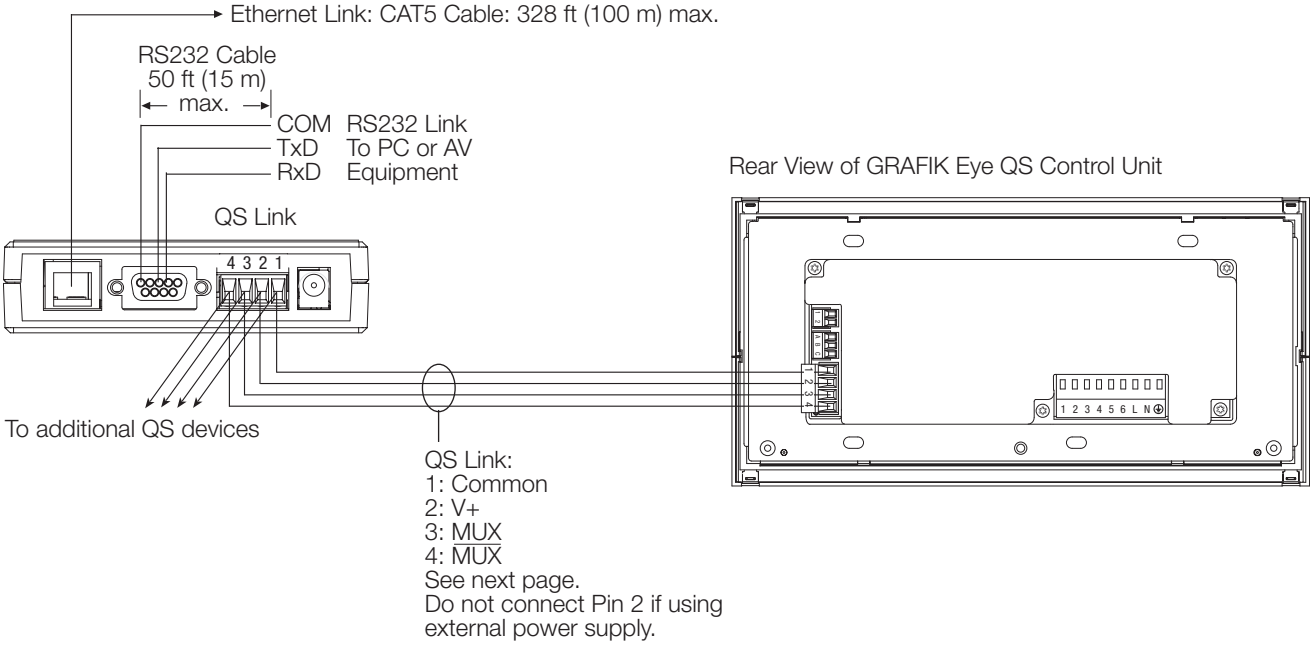

The Lutron logo, Lutron, Athena, HomeWorks, GRAFIK Eye, Sivoia, Energi Savr Node, and Quantum are trademarks or registered trademarks of Lutron Electronics Co., Inc. in the US and/or other countries.

Job Name:	Model Numbers:	
Job Number:		

Wiring (continued): QS Link Wiring Methods (choose one)

- System communication uses SELV/PELV/NEC® Class 2 wiring. Follow all local and national electrical codes for installation.
- Each terminal accepts up to two 18 AWG (1.0 mm²) wires or one 12 AWG (4.0 mm²) wire.
- Total length of control link must not exceed 2000 ft (610 m).
- Do not allow SELV/PELV/NEC® Class 2 wires to contact live/mains wire.
- Typical Wire Sizes: See QS Link Wire Sizes table.
- Connect the terminal 1, 3, and 4 connections to all control units, wallstations, and control interfaces in the QS system. For terminal 2 connectivity, see below.

Powered by GRAFIK Eye QS Control Unit

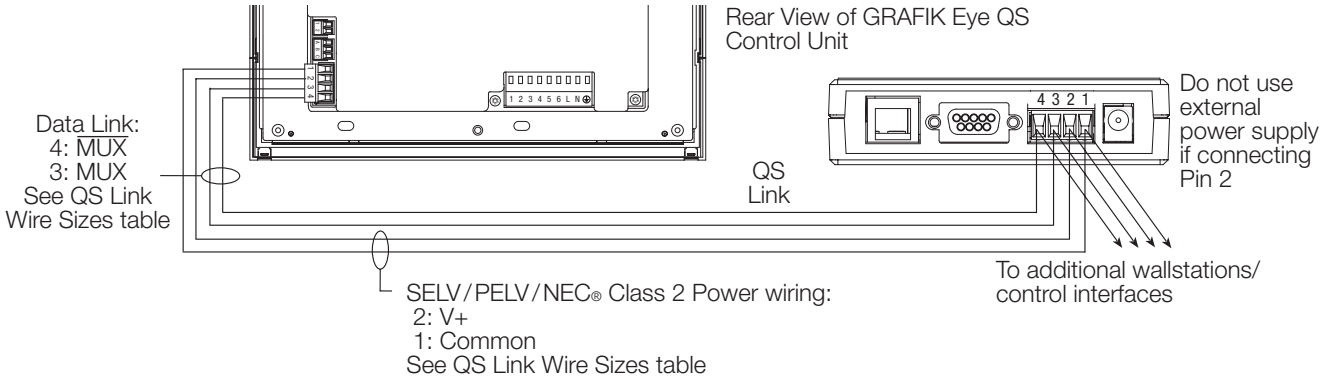

Powered by a QS Link Power Supply*

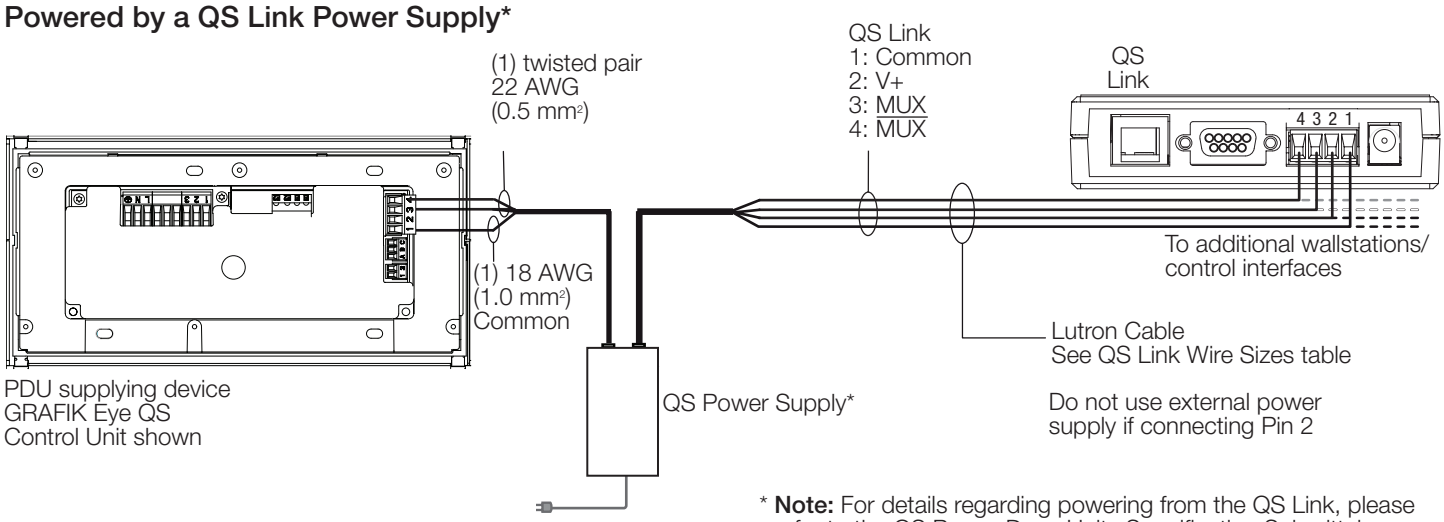

* **Note:** For details regarding powering from the QS Link, please refer to the QS Power Draw Units Specification Submittal (P/N 369405) at www.lutron.com

QS Link Wire Sizes (check compatibility in your area)

QS Link Wiring Length	Wire Gauge	Lutron Cable Part Number
< 500 ft (153 m)	Power (terminals 1 and 2) 1 pair 18 AWG (1.0 mm²)	GRX-CBL-346S (non-plenum) GRX-PCBL-346S (plenum)
	Data (terminals 3 and 4) 1 twisted, shielded pair 22 AWG (0.5 mm²)	
500 ft–2000 ft (153 m–610 m)	Power (terminals 1 and 2) 1 pair 12 AWG (4.0 mm²)	GRX-CBL-46L (non-plenum) GRX-PCBL-46L (plenum)
	Data (terminals 3 and 4) 1 twisted, shielded pair 22 AWG (0.5 mm²)	

Job Name:	Model Numbers:	
Job Number:		

369544i 1 03.27.18

PP and UPP Series Power Packs

PP and UPP[1] Series Power Packs provide both the 24 V⎓ power supply to operate Lutron wired occupancy sensors, as well as the 16 A line-voltage relay to control the load, in one compact housing. The unit can be mounted inside a ballast enclosure or inside/outside a junction box.

The manual-ON Power Pack (-DV-M) is used to provide a vacancy-only solution (not configurable for occupancy behavior) when paired with Lutron wired occupancy sensors. A low-voltage momentary switch should be used to manually turn ON the load while the sensor automatically shuts the load OFF when unoccupied. Pressing the momentary switch can also turn the load OFF.

The auxiliary Power Pack (-SH) must be used in conjunction with at least one line-voltage Power Pack and one Lutron wired occupancy sensor to switch additional loads.

(-DV)
(-DV-M [vacancy ONLY])
(-347H)

(-SH)

Features

- High-impact UL94 flammability-rated plastic case construction
- Relay: Class B 266 °F (130 °C) insulating material; silver alloy contacts
- Power Pack units (PP-DV/UPP-DV, PP-347H, PP-DV-M/UPP-DV-M) power up to 3 total devices. PP-SH/UPP-SH counts as 1 device, each occupancy sensor counts as 1 device.
- For indoor use only, 32 °F to 104 °F (0 °C to 40 °C), 0% to 90% humidity, non-condensing

Model	Power Input	Relay Contact Rating	Control Input	IEC PELV/ NEC® Class 2 Output
PP-DV **UPP-DV** **PP-DV-M (vacancy ONLY)** **UPP-DV-M (vacancy ONLY)**	120-277 V~ 50/60 Hz 6.5 W	• 120-277 V~ 16 A; All lighting loads[2] • 120-277 V~ 1 HP Motor Load	24 V⎓ 5 mA	24 V⎓ 150 mA up to 3 Devices[3]
PP-347H	347 V~ 60 Hz 6.5 W	• 347 V~ 15 A Ballast	24 V⎓ 5 mA	24 V⎓ 100 mA up to 3 Devices[3]
PP-SH **UPP-SH**	24 V⎓ (At least one line-voltage Power Pack must be used)	• 120-277 V~ 16 A; All lighting loads[2] • 120-277 V~ 1 HP Motor Load • 347 V~ 15 A Ballast	24 V⎓ 5 mA	N/A

[1] "U" denotes BAA compliance
[2] Lighting loads include (but are not limited to): Incandescent, MLV, ELV, Resistive, Inductive
[3] PP-SH/UPP-SH counts as 1 device and each occupancy sensor counts as 1 device

Job Name:	Model Numbers:	
Job Number:		

Specifications

Regulatory Approvals

- UL® and cUL® Listed
- Complies with requirements for use in other spaces used for environmental air (plenums) per NEC® 2014 300.22(C)(3)

Power / Performance

- PP-DV, UPP-DV, PP-DV-M, UPP-DV-M: 120-277 V∼ 50/60 Hz
- PP-347H: 347 V∼ 60 Hz only

Wiring

- 7 in (178 mm) wire leads, 18 AWG (0.75 mm^2) input; 7 in (178 mm) leads, 16 AWG (1.5 mm^2) contacts.

Mounting

- Fits inside standard 4 in x 4 in (102 mm x 102 mm) junction box or standard fluorescent fixture ballast cavity
- Mount with 6/32 in (5 mm) x 1¼ in (32 mm) pan head screws
- Mounts inside junction box through knockout, with 1/2 in (13 mm) Electrical Metallic Tubing (EMT) threaded nipple. Recommended volume is 30 in^3 (762 mm^3).

Dimensions

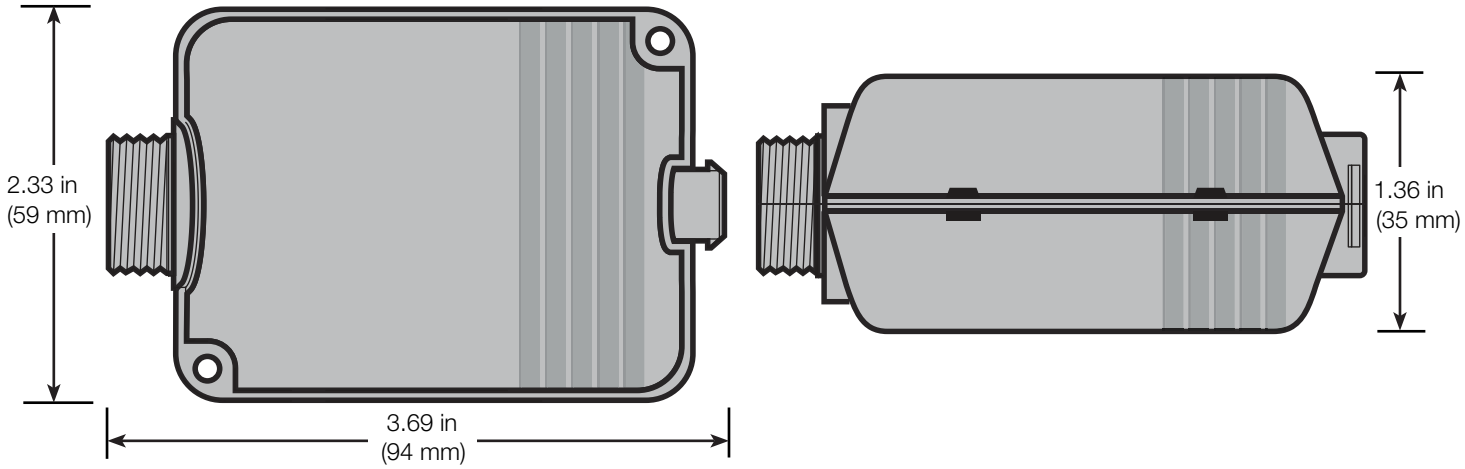

Job Name:	Model Numbers:	
Job Number:		

369544i 3 03.27.18

Wiring

3 Sensors with Power Pack (PP-DV, UPP-DV or PP-347H)[1]

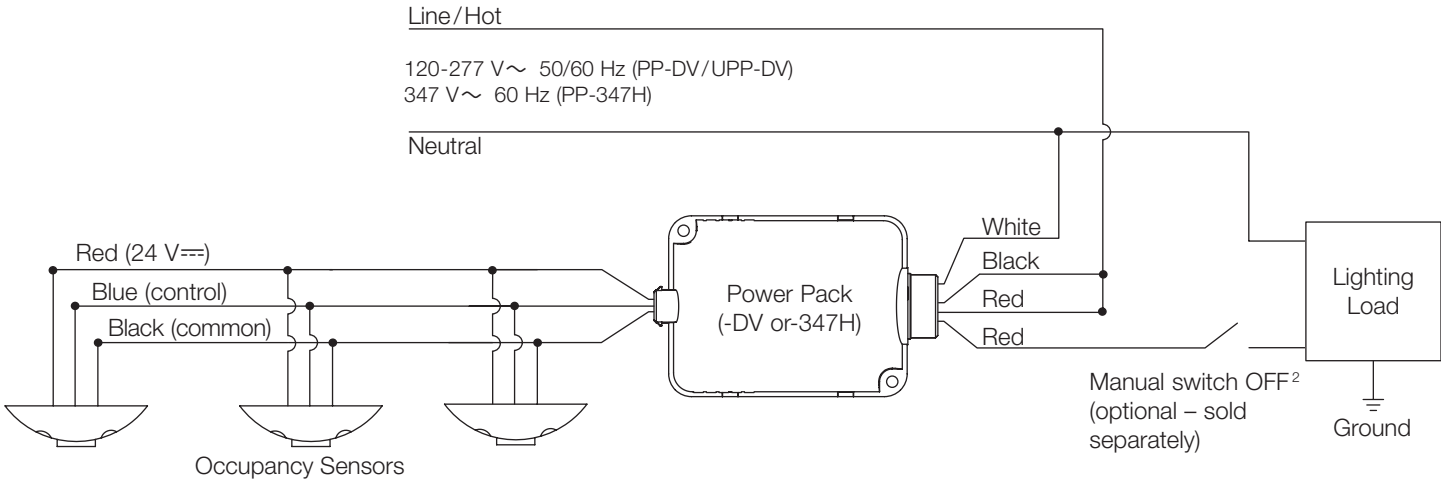

1 Maximum 3 occupancy sensors can be used with PP-DV/UPP-DV or PP-347H.
2 When lights are manually turned off, switch must be returned back to the on position for occupancy sensors to function as set.

3 Sensors with Power Pack - Vacancy-Only Solution (PP-DV-M, UPP-DV-M)[1,2]

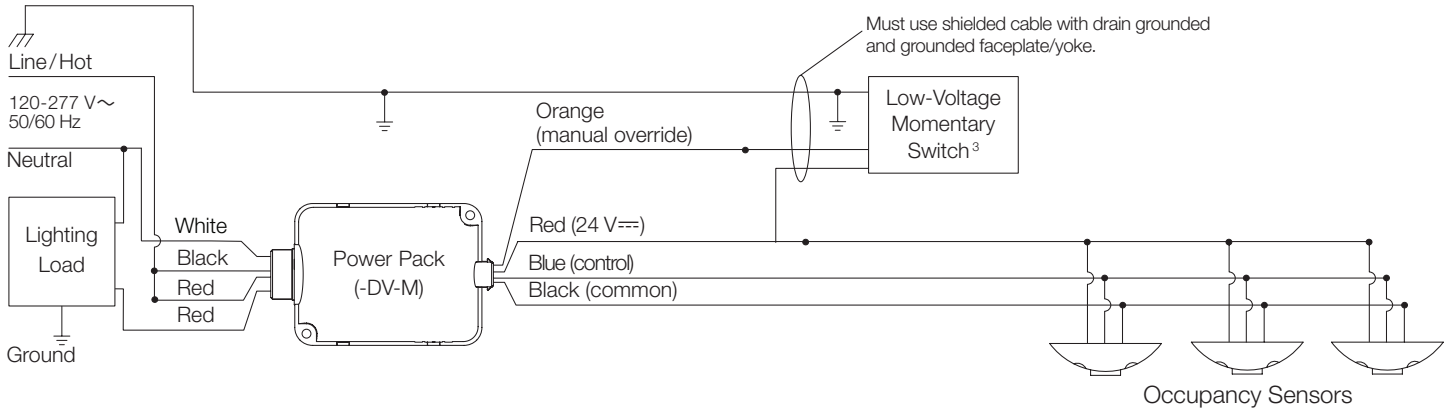

1 Maximum 3 devices (excluding low-voltage momentary switches) can be used with PP-DV-M/UPP-DV-M. Each PP-SH/UPP-SH counts as one device, each occupancy sensor counts as one device.
2 The PP-DV-M cannot be used for occupancy functionality. It is a vacancy ONLY solution. For occupancy functionality, use the PP-DV.
3 NTRCS-1 (Nova T☆ momentary switch) or any low voltage momentary switch rated for at least 24 V⎓, 100 mA.

continued on next page...

Job Name:	Model Numbers:	
Job Number:		

Wiring *(continued)*

Switching Multiple Loads with 1 Power Pack and 1 Auxiliary Power Pack[1]

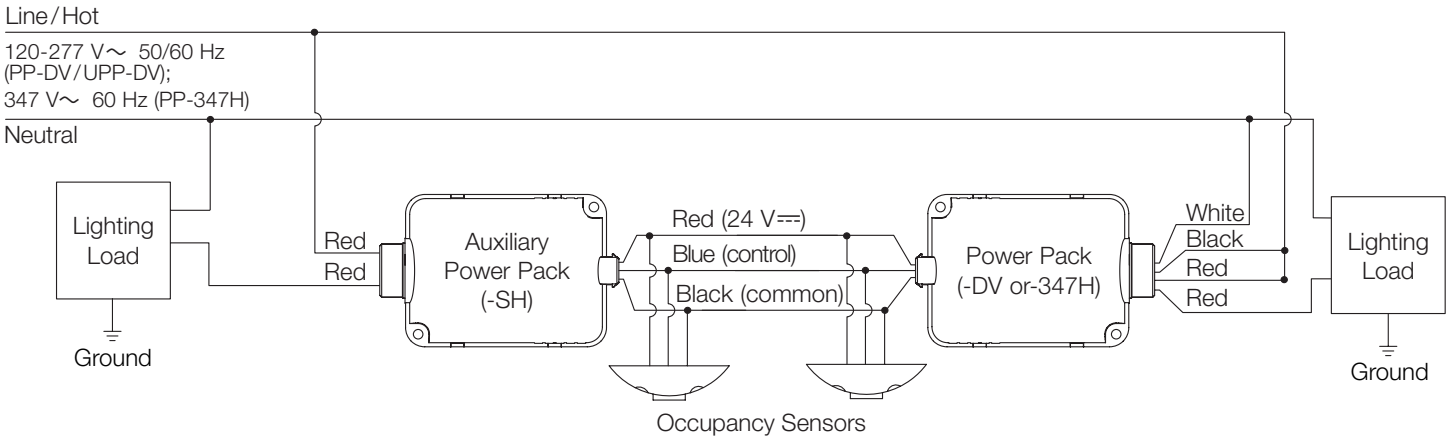

[1] Maximum of 3 devices can be used with PP-DV, UPP-DV, or PP-347H. Each PP-SH/UPP-SH counts as one device, each occupancy sensor counts as one device.

Switching Multiple Loads with 2 Power Packs (PP-DV/UPP-DV)

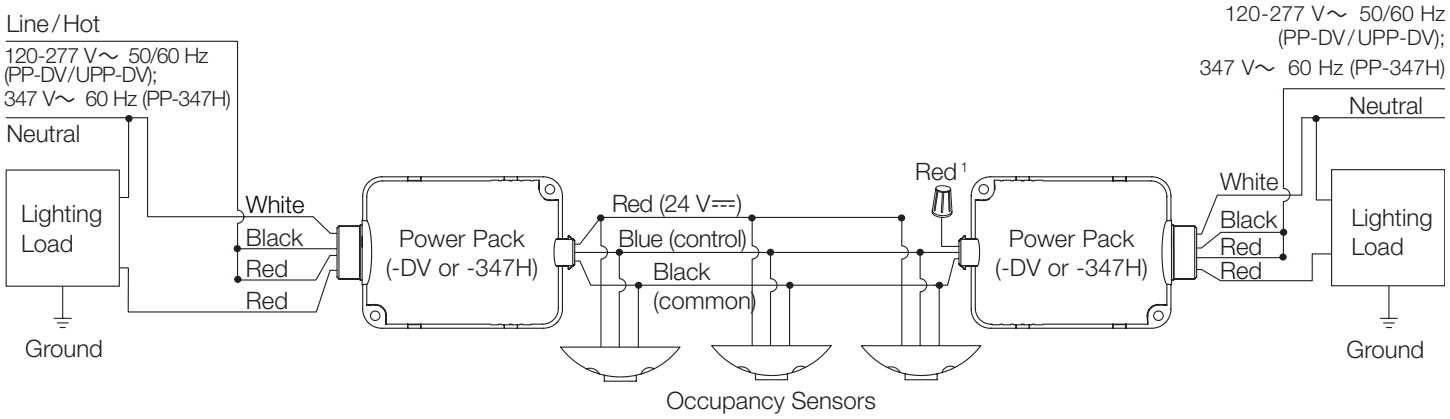

[1] Only 1 Power Pack (PP-DV/UPP-DV) should power the occupancy senors. This 24 V⎓ output is left disconnected.

Lutron, Lutron, and Nova T☆ are trademarks of Lutron Electronics Co., Inc., registered in the U.S. and other countries.
NEC is a registered trademark of National Fire Protection Association, Quincy, Massachusetts.
UL is a trademark of UL LLC.

Job Name:	Model Numbers:	
Job Number:		

369886e 1 04.10.20

QS Link Power Supply

The QSPS-DH-1-75 QS link power supply provides up to 75 Power Draw Units (PDUs) on a QS link. The QSPS-DH-1-75 powers additional compatible accessories and devices, allowing them to be added to a QS system.

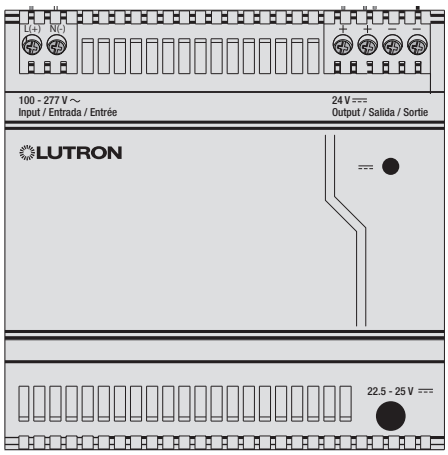

QSPS-DH-1-75

Specifications

Model Number

- QSPS-DH-1-75

Input Power

- Nominal input voltage: 100–277 V∼
- Frequency: 50/60 Hz
- Current consumption, fully loaded (typical):
  0.5 A (277 V∼)
  0.7 A (230 V∼)
  1.0 A (120 V∼)
  1.3 A (100 V∼)

Power Supply Output

- Nominal output voltage and tolerance:
  24 V⎓ / ±1%, 75 Power Draw Units (PDUs)*
- 2.5 A SELV / PELV / NEC® Class 2
- Power Draw Units (PDUs): Supplies 75 PDUs maximum*

Note: This power supply is NOT rated for use with motorized shades/window treatments.

Environment

- Ambient operating temperature : 32 °F to 131 °F (0 °C to 55 °C).
- Ambient operating humidity: 0% to 90% humidity, non-condensing. Indoor use only.
- Unit generates heat, maximum 28 BTU / hr
- 60 °C maximum calibration point temperature. For more information, see www.lutron.com/TechnicalDocumentLibrary/048466.pdf

Mounting

- Mount using 1.38 in (35 mm) DIN rail in accordance with EN 60715

Dimensions

- 3.54 in (90 mm) × 3.54 in (90 mm) × 2.40 in (61 mm)

Regulatory Approvals

- UL
- cUL
- CE compliant
- NOM compliant

Efficiency

- Meets the U.S. Department of Energy level VI efficiency standard

Warranty

- www.lutron.com/TechnicalDocumentLibrary/3601201A_Commercial_Limited_Warranty.pdf

* Use above this maximum will reduce the lifetime of the supply and void all Lutron warranties. For more information about Power Draw Units (PDUs), please refer to www.lutron.com/TechnicalDocumentLibrary/369405%20pdu%20spec%20submittal.pdf

Job Name:	Model Numbers:	
Job Number:		

Dimensions

Dimensions shown as: in (mm)

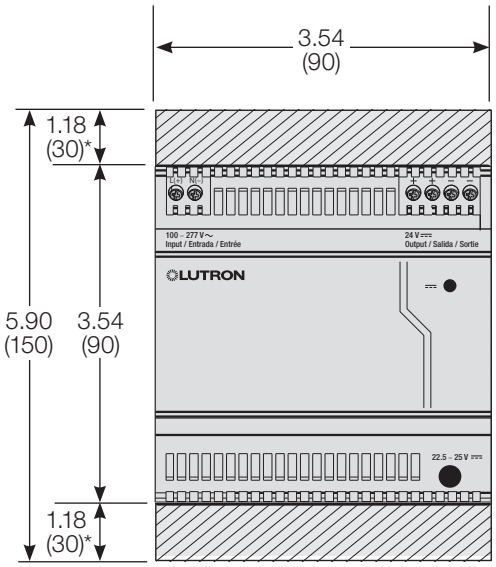

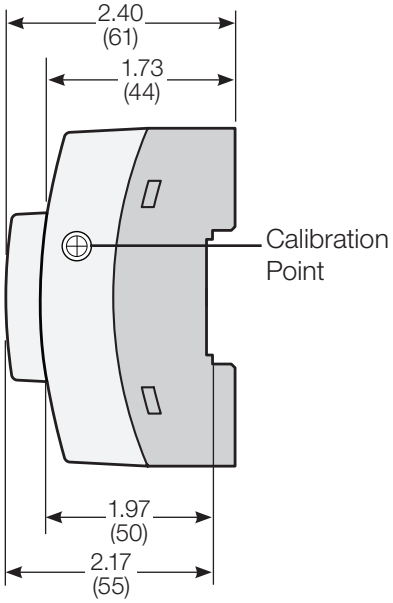

* Required clearance above and below the power supply.

Mounting

- Surface mount using screws, or mount on DIN rail
- Use an IP20 (minimum) rated consumer panel or breaker panel with integrated DIN
- The device must be mounted horizontally (connection terminal blocks on top).

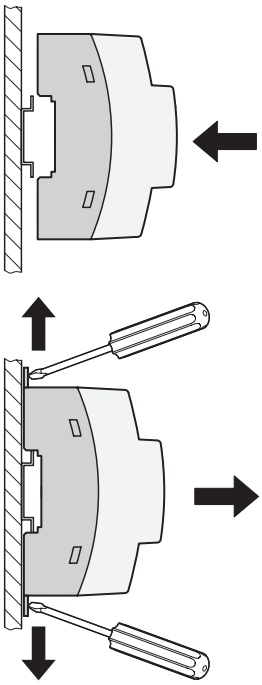

DIN Rail Mounting:

Snap onto DIN rail.

To remove, pull out tabs with screwdriver and lift off.

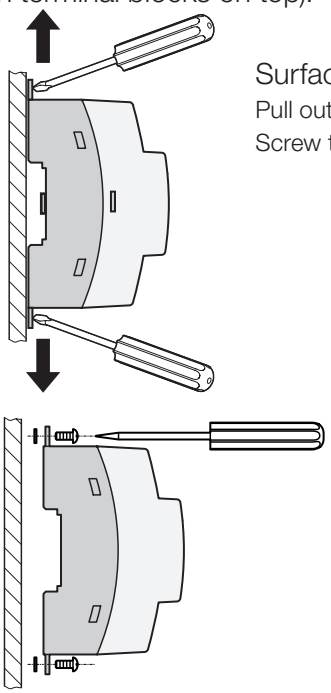

Surface Mounting:

Pull out tabs with screwdriver.

Screw through tabs to secure.

Job Name:	Model Numbers:	
Job Number:		

Wiring

- Wire in accordance with national and local electrical codes
- Each terminal accepts one 24 AWG to 12 AWG (0.2 mm^2 to 2.5 mm^2) wire, with 1/4 in (6.5 mm) stripped bare
- Maximum torque: 5.0 in-lb to 7.0 in-lb (0.6 N•m to 0.8 N•m)

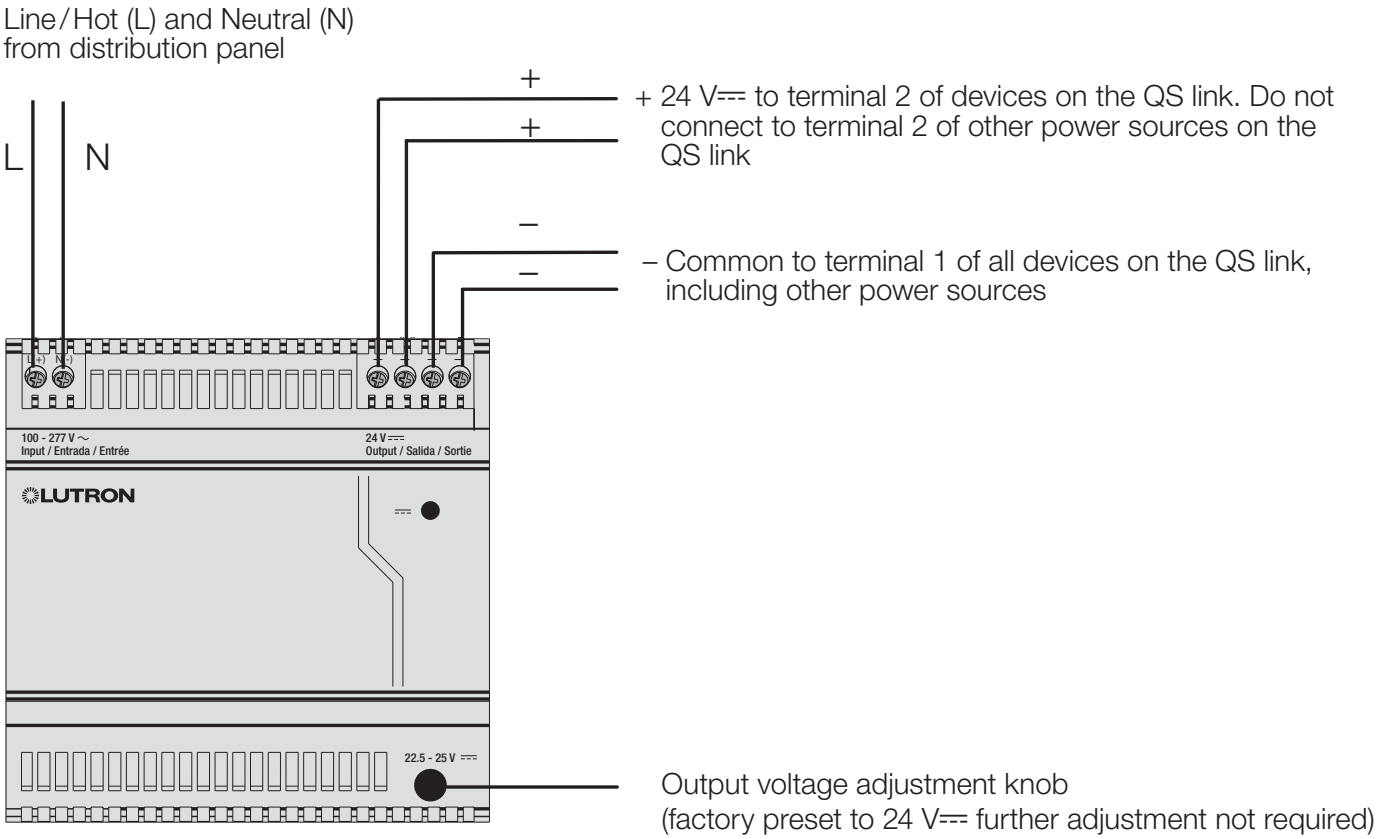

QS Link Wiring Length	Wire Gauge	Lutron Cable Part Number
Less than 500 ft (153 m)	Power (terminals 1 and 2) 1 pair 18 AWG (1.0 mm^2)	GRX-CBL-346S (non-plenum) GRX-PCBL-346S (plenum)
	Data (terminals 3 and 4) 1 twisted, shielded pair 22 AWG (0.5 mm^2)	
Up to 2000 ft (610 m)	Power (terminals 1 and 2) 1 pair 12 AWG (4.0 mm^2)	GRX-CBL-46L (non-plenum) GRX-PCBL-46L (plenum)
	Data (terminals 3 and 4) 1 twisted, shielded pair 22 AWG (0.5 mm^2)	

Job Name:	Model Numbers:	
Job Number:		

369886e 4 04.10.20

QS Link Power Distribution

On the QS link, there are devices that supply power and devices that consume power. Each device has a specific number of Power Draw Units (PDUs) it either supplies or consumes. A Power Group consists of one device that supplies power and one or more devices that consume power; each Power Group may have only one power-supplying device. Refer to the Power Draw Units (PDUs) on the QS Link Specification Submittal (Lutron P/N 369405) at www.lutron.com for more information regarding PDUs.

Within Power Groups on the QS link, connect all 4 terminals (1, 2, 3, and 4), shown by the letter A in the diagram. Between devices on the QS link that supply power, connect only terminals 1, 3, and 4 (NOT terminal 2), shown by the letter B on the diagram. See **Wiring** section on the previous page for details on wiring the QSPS-DH-1-75 power supply to the QS link.

Example: Power Group Wiring

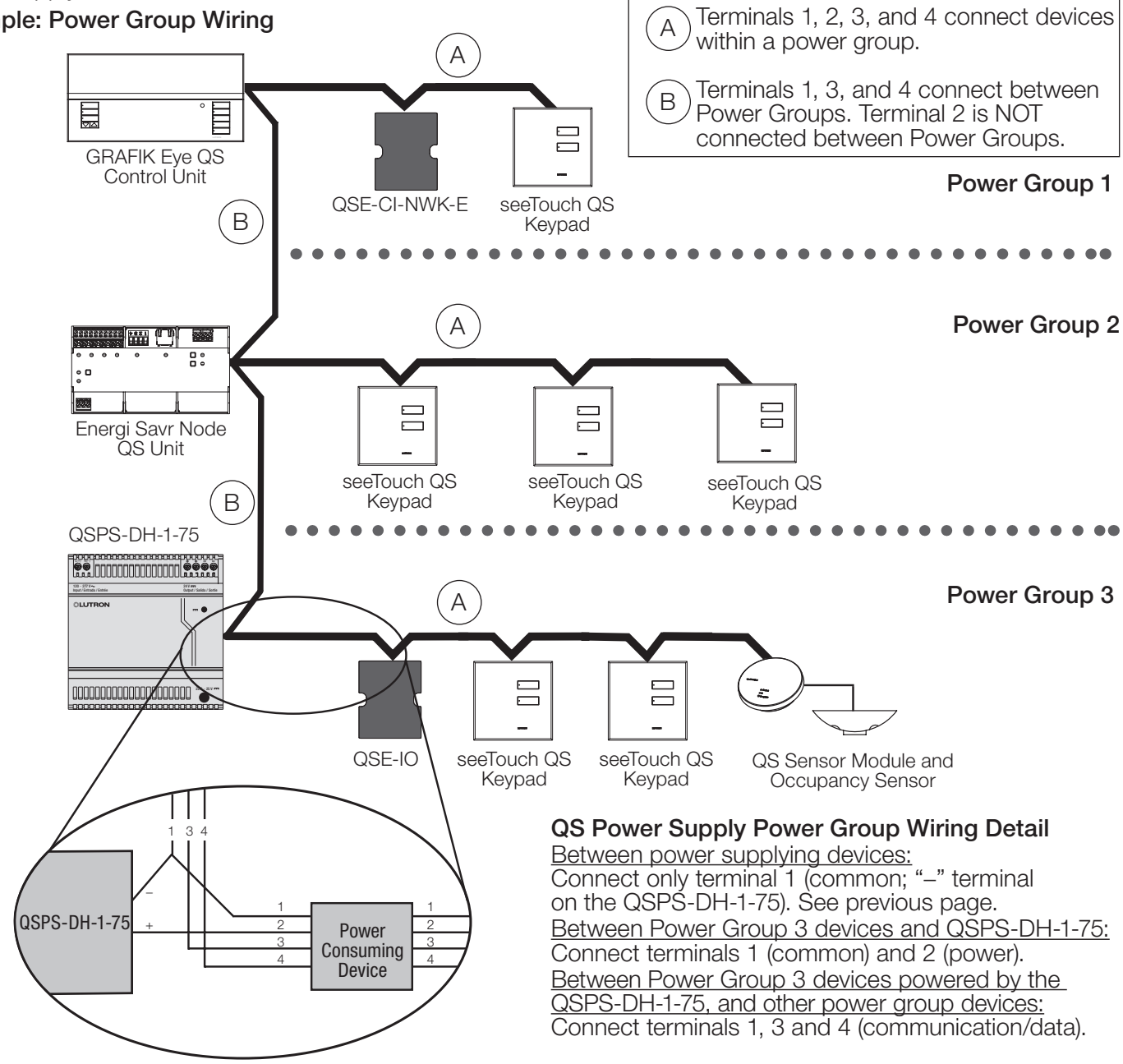

QS Power Supply Power Group Wiring Detail

Between power supplying devices:
Connect only terminal 1 (common; "–" terminal on the QSPS-DH-1-75). See previous page.

Between Power Group 3 devices and QSPS-DH-1-75:
Connect terminals 1 (common) and 2 (power).

Between Power Group 3 devices powered by the QSPS-DH-1-75, and other power group devices:
Connect terminals 1, 3 and 4 (communication/data).

Job Name:	Model Numbers:	
Job Number:		

Power Supply Breaker Feed

QSPS-DH-1-75 power supplies have a large capacitive inrush when first powered. A dedicated breaker feed with no more than the indicated number of power supplies is required to avoid nuisance tripping.

Voltage	Breaker Size/Type	Max QSPS-DH-1-75 Units
100 V~ to 127 V~	15 A QO series standard trip curve	13
	20 A QO series standard trip curve	15
220 V~ to 277 V~	10 A (B trip curve)	2
	10 A (C trip curve)	3
	10 A (D trip curve)	6
	16 A (B trip curve)	3
	16 A (C trip curve)	5
	16 A (D trip curve)	10

Lutron, Lutron, GRAFIK Eye, Energi Savr Node and seeTouch are trademarks or registered trademarks of Lutron Electronics Co., Inc. in the US and/or other countries.
All other product names, logos, and brands are property of their respective owners.

Job Name:	Model Numbers:	
Job Number:		

Mounting Options

Standalone Mounting

Adhesive Mounting

Included with Pico wireless control

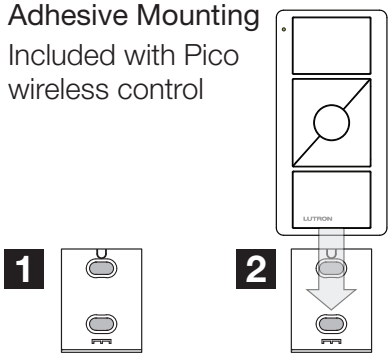

Screw Mounting

Model: PICO-SM-KIT (sold separately)

Kit includes special screws to be used for more permanent mounting and/or for non-smooth surfaces.

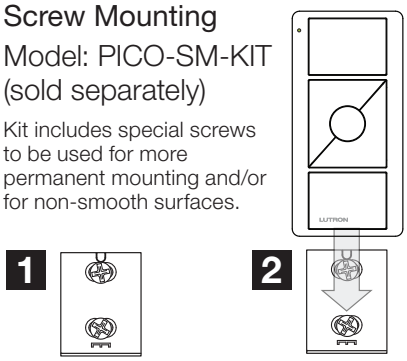

Metal Surface Mounting

Model: PICO-MOUNT-1-XX-CPN6774 (sold separately)

Contact your local Lutron sales office.

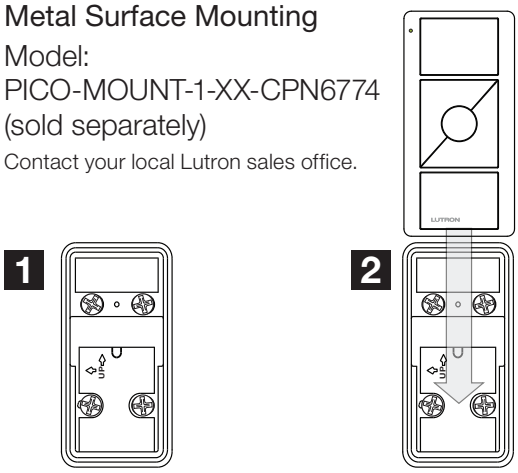

Wallbox Mounting

Wallbox Adapter

Model: PICO-WBX-ADAPT (sold separately)

Wallplate adapter/wallplate sold separately.

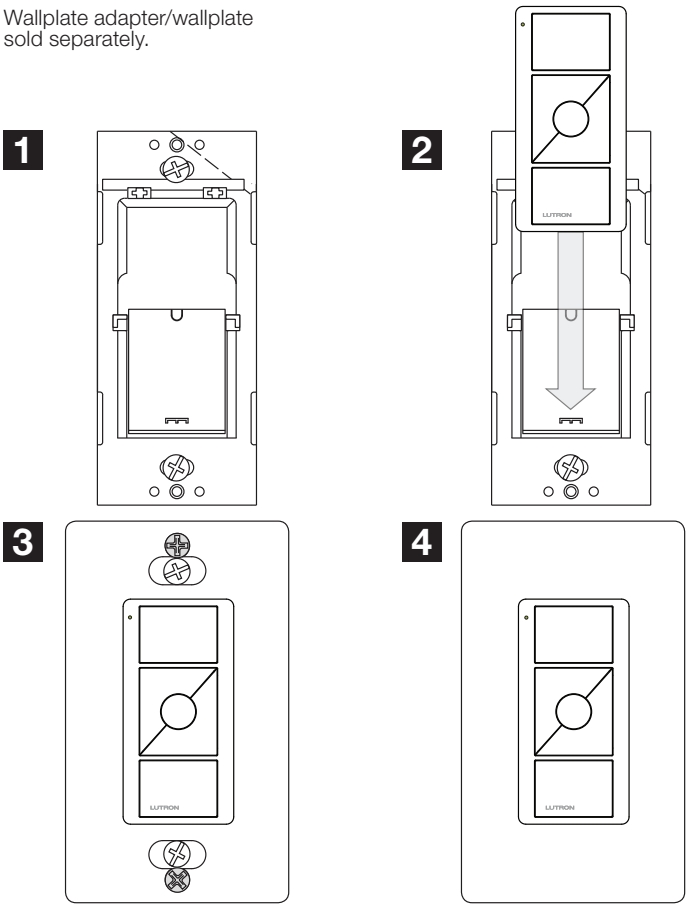

Surface Mounting Kits

Wall-Mounting Kit

Model: PJ2-WALL-WH-L01; PJ2-WALL-WH-L01C*
(sold separately)

Kit includes:

- Pico wireless control
- Claro wallplate (with wallplate adapter)
- Wallbox adapter

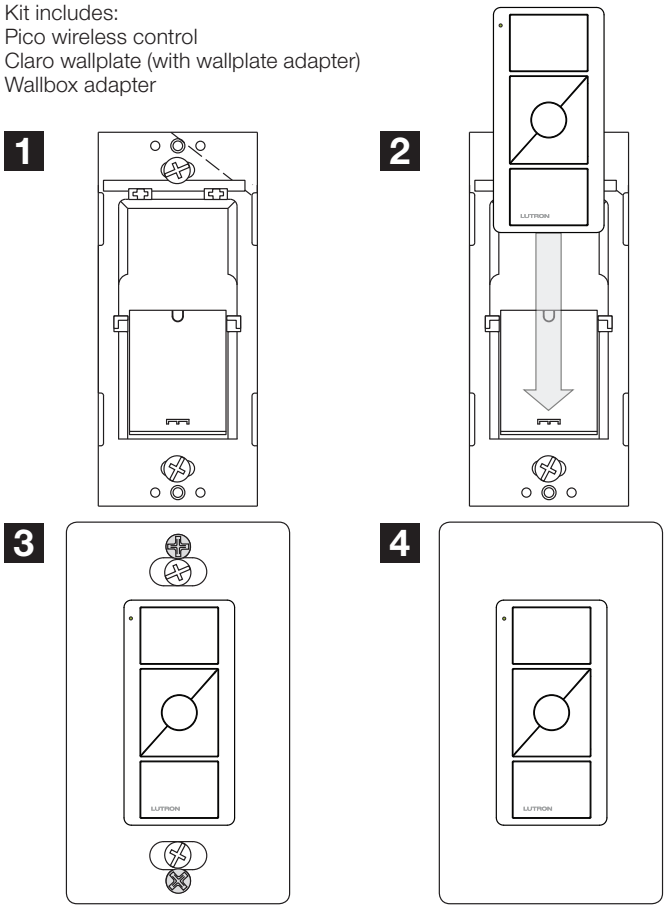

* Canadian packaged product.

Job Name:	Model Numbers:	
Job Number:		

3691181c 1 09.24.21

Athena System On-site Startup

Models Available:

- LSC-OS-SU-A-SA
- LSC-OS-SU-A-RPS
- LSC-OS-SU-A-PS
- LSC-OS-SU-A-ST
- LSC-OS-SU-A-RPST
- LSC-OS-SU-A-PST

Abbreviation Descriptions:

- S=On-site Startup
- RP=Remote Pre-wire Session
- P=On-site Pre-wire Visit
- T=Training Package

Overview

- **LSC-OS-SU-A-SA**: On-site Athena startup by a Lutron Services Company representative for this system after Lutron equipment is installed:
  - On-site startup visit(s) after Lutron equipment is installed; equipment installation is verified, and the system is programmed and tested during this time to comply with the approved sequence of operations.
    - Unless noted on BOM, a separate pre-wire and training visit are not included with this system. A brief system overview will be conducted on the last day of commissioning at time of system turnover.
- **LSC-OS-SU-A-RPS:** On-site Athena Startup by a Lutron Services Company representative for this system includes the following services:
  - A remote pre-wire session with the electrical contractor, project manager, and owner's representative to discuss the project scope (including installation details on all equipment), review the Lutron submittal package (specifically the system one-line, device spec sheets and system layout) and discuss the construction timeline.
  - On-site startup visit(s) after Lutron equipment is installed; Equipment installation is verified, and the system is programmed and tested during this time to comply with the approved sequence of operations.
    - Unless noted on the BOM, a training visit is not included with this system. A brief system overview will be conducted on the last day of commissioning at time of system turnover.
- **LSC-OS-SU-A-PS**: On-site Athena startup by a Lutron Services Company representative for this system includes the following visits:
  - An on-site pre-wire visit with the electrical contractor, project manager, and owner's representative to discuss the project scope (including installation details on all equipment) and timeline.
  - On-site startup visit(s) after Lutron equipment is installed; equipment installation is verified, and the system is programmed and tested during this time to comply with the approved sequence of operations.
    - Unless noted on the BOM, a separate training visit is not included with this system. A brief system overview will be conducted on the last day of commissioning at time of system turnover.
- **LSC-OS-SU-A-ST**: On-site Athena startup by a Lutron Services Company representative for this system includes the following visits:
  - On-site startup visit(s) after Lutron equipment is installed; equipment installation is verified, and the system is programmed and tested during this time to comply with the approved sequence of operations.
    - Unless noted on the BOM, a pre-wire service is not included with this system.
  - A training package which includes: (1) 2-hour contractor training on the last day of commissioning and (1) Customer System Orientation visit (LSC-CSO-VST) 30-90 days post occupancy.
    - Any person who will be operating in the system on a regular basis should be in attendance to the customer system orientation visit (LSC-CSO-VST).

Job Name:	Model Numbers:	
Job Number:		

Overview (continued)

- **LSC-OS-SU-A-RPST:** On-site Athena Startup by a Lutron Services Company representative for this system includes the following services:
  - A remote pre-wire session with the electrical contractor, project manager, and owner's representative to discuss the project scope (including installation details on all equipment), review the Lutron submittal package (specifically the system one-line, device spec sheets and system layout) and discuss the construction timeline.
  - On-site startup visit(s) after Lutron equipment is installed; equipment installation is verified, and the system is programmed and tested during this time to comply with the approved sequence of operations.
  - A training package which includes: (1) 2-hour contractor training on the last day of commissioning and (1) Customer System Orientation visit (LSC-CSO-VST) 30-90 days post occupancy.
    - Any person who will be operating in the system on a regular basis should be in attendance to the customer system orientation visit (LSC-CSO-VST).
- **LSC-OS-SU-A-PST**: On-site Athena startup by a Lutron Services Company representative for this system includes the following visits:
  - An on-site pre-wire visit with the electrical contractor, project manager, and owner's representative to discuss the project scope (including installation details on all equipment) and timeline.
  - On-site startup visit(s) after Lutron equipment is installed; equipment installation is verified, and the system is programmed and tested during this time to comply with the approved sequence of operations.
  - A training package which includes: (1) 2-hour contractor training on the last day of commissioning and (1) Customer System Orientation visit (LSC-CSO-VST) 30-90 days post occupancy.
    - Any person who will be operating in the system on a regular basis should be in attendance to the customer system orientation visit (LSC-CSO-VST).

Job Name:	Model Numbers:	
Job Number:		

3691181c 3 09.24.21

Athena Service Notes

- Any site visits included in the service will occur between the hours of 1:00 am and 5:00 pm on a Monday through Friday that is not a Lutron Holiday.
- Visits can be made outside these hours for an additional charge.
- Visits may require multiple days depending on the size of the system.
- Lutron requires fifteen (15) business days' notice to schedule a startup visit. Additional charges may apply for expediting service within fifteen (15) business days.
- Lutron offers a portfolio of additional items (see page 8) that support the startup process; these services are offered a-la-carte and are not included as part of the typical scope of startup. If they are required, verify that they were included with the system purchase.

A Lutron Services Company representative performs all system startup items.

All terminations will be done by the installing agency. A representative from the installing agency must attend the pre-wire meeting and startup visits and must be familiar with the installation of the system.

Items not included in standard Athena Startup

- Lutron Services Company representatives will not perform work on non-Lutron equipment.
- Programming or any other changes that are requested to be performed counter to the approved submittal sequence of operations must be approved via the proper channels and may result in additional charges.
- Field wiring changes or corrections that delay the startup process such that additional time is required for Lutron to complete the startup will result in additional charges.
- Replacement of controls damaged due to mis-wires, incorrect installation, or any other related issue not covered under the Lutron warranty is the responsibility of the installer.
- Reprogramming of any functions after initial programming and sign-off may result in additional charges.
- Construction phasing, which may require multiple visits, is not included in a standard Athena startup. If this is required, please contact your Lutron representative.

Logistics

- To schedule a service, please submit a "Schedule a Visit" form at www.lutron.com/scheduling or call: 1.844.LUTRON1.
- Please contact Lutron at least fifteen (15) days prior to the requested visit date

Job Name:	Model Numbers:	
Job Number:		

3691181c 4 09.24.21

Meeting 1: System pre-wire service (Included with the RPST (remote pre-wire), RPS (remote pre-wire), PST (on-site pre-wire) & PS (on-site pre-wire) [defined on page 1])

- Familiarize the electrical contractor, project manager, and/or owner's representative with wiring and/or mounting of system devices.
- Understand the overall project schedule.
- Review preliminary mounting locations and wiring practices for QS devices or shades, dimming/switching panels, local wall controls, ceiling-mount controls/sensors, interface devices, ballasts, and Athena hub(s).
- Review preliminary wiring plans of devices wired to ballasts (i.e., occupancy sensor xx is wired to fixture number xx). Ensure infrared (IR) sensors are wired to ballasts on the same loop.
- Review preliminary drawings for proper hub to EcoSystem loop wiring.
- Provide training to appropriate parties in dipswitch overrides.

Meeting 2: On-site system startup (Included with the RPST, RPS, PST, PS & ST [defined on page 1])

- Audit the system to ensure the Athena system is installed according to Lutron specifications.
- EcoSystem and/or T-Series LED driver discovery and addressing.
- Verify Athena hubs and Clear Connect-Type X gateways and transfer system database.
- Check loads for shorts and overloads and remove bypass jumpers.
  - Dimming/switching panels should be energized in bypass, fully lamped and tested prior to our arrival.
- Verify proper wiring and operation of the Athena controls.
- Programming the dimming/switching panels includes:
  - Panel addressing.
  - Verify proper wiring and operation of control link.
  - Proper load types assigned as installed or as per approved submittal drawings. As installed conditions take precedence. This may be a modular system if load types differ from the original design additional equipment may be required.
  - Circuit to button assignments per recommended sequence of operations.
  - When applicable, program emergency function per the installation guide for the system.
- Device programming (to include wall controls, sensors, interfaces, and/or timeclocks).
  - Control addressing.
  - Verify proper wiring and operation of the control link.
  - Setup controls to function as per the recommended, normal used case sequence of operations per devices on the bill of material.

Job Name:	Model Numbers:	
Job Number:		

Meeting 2: On-site system startup
(continued)

If your project contains:

- Static White Light: Lutron recommended normal case settings is as follows:
  - Occupancy/Vacancy sensors:
    - In spaces with a wall control, occupancy/vacancy sensors will be set up as a vacancy sensor (only automatically turning off the lights) with 15-minute, +/- 1-minute, time-out.
  - Daylight sensors:
    - Calibrated in such a manner to provide 40 fc, +/- 5 fc, 3 ft (91 cm) off the floor at a specific point in the room, typically the center of a desk or directly under a fixture. Note the consistency of light distribution throughout the space is highly dependent upon fixture design and placement.
  - Wall controls:
    - One button: Toggle lights on and off.
    - Two button: Top button will turn lights on; bottom button will turn lights off.
    - More than two buttons, for dimmer zones: Top buttons will set the lights to different levels; bottom button will turn the lights off.
  - Timeclock settings:
    - The building's exterior lights on the Lutron system will turn on at sunset and turn off at sunrise.

Job Name:	Model Numbers:	
Job Number:		

Meeting 2: On-site system startup
(continued)

If your project contains: Dynamic white lighting (i.e., Ketra, T-series, DALI Type 8)

- If a pre-determined sequence of operations is not provided at the time of specification, the system database will be set with the Lutron recommended, normal used case color settings mentioned below.
  - Dynamic White SoO-Lutron recommended, normal use case settings.
    - For Ketra:
      - Static Scenes will be programmed to a default color temperature of 3000K.
      - Scene Intensity set for 3000 K.
        - CCT shall be controlled automatically per Lutron's default Natural Show curve. Fixture CCT shall begin ramping from 2700 K starting 6:00 am, completing the ramp up to 4000 K 9:00 am. Fixture CCT shall begin ramping down from 4000 K at 5:00 pm, completing the ramp down to 2700 K at 8:00 pm.
        - Manual Controls will activate scenes 1-4 with R/L.
    - For T Series and Tunable White DALI:
      - CCT Zoning.
        - The CCT of tunable white fixtures in this space shall be controlled as a single zone.
      - Tunable white fixture CCT shall be controlled automatically per Lutron's default Automatic CCT curve. Fixture CCT shall begin ramping from 2700 K starting 60 minutes before sunrise, completing the ramp up to 4000 K 120 minutes after sunrise. Fixture CCT shall begin ramping down from 4000 K 120 minutes before sunset, completing the ramp down to 2700 K 60 minutes after sunset.
      - Return to Automatic CCT curve.
        - The Automatic CCT curve shall not be overridden by the controls in the space.
    - Daylight sensors shall only modify intensity and not CCT.
    - Occupancy/vacancy sensors:
      - In spaces with remotes and/or wall controls, sensors will be set up as vacancy sensors (only automatically turning off the lights).
      - In spaces without remotes and/or wall controls, sensors will set up as occupancy sensors (automatically turning the lights on and off the Natural Show).

Job Name:	Model Numbers:	
Job Number:		

Meeting 2: On-site system startup
(continued)

- Manual Controls:
  - Intensity and CCT keypads and remotes.
    - Single Gang [Insert keypad/remote brand name/model number] for control of Intensity only. Button engraving and programming, from top to bottom, shall be “High” (set intensity to 100%), “Medium” (set intensity to 50%), “Low” (set intensity to 25%), Off (set intensity to 0%).
- Intensity Timeclock Events:
  - User-defined timeclock events shall not be used in the space.
- Emergency/Egress:
  - In the event of an emergency/egress situation, tunable white fixtures designated as Emergency/Egress will have their intensity automatically set to 100% and their CCT automatically set to 50% of the fixture’s CCT range.

– DMX- Lutron Recommended, normal use case settings:
- Pre-programmed DMX scenes will not be provided unless already specified. If not already specified, coordination of DMX scenes to be performed on-site and may incur additional cost.
- Intensity Considerations:
  - Occupancy/Vacancy sensing:
    - Occupancy sensors shall only modify intensity and shall not modify color.
    - Occupancy sensors shall turn on lighting automatically when the space is occupied and shall turn off/reduce lighting automatically 15 minutes after the space is vacated.
- Daylighting:
  - Daylighting is not an option for controlling DMX loads.
- Manual Controls:
  - Intensity and color keypads and remotes.
    - Single Gang [Insert keypad/remote brand name/model number] for control of intensity and color.
  - Button coordination to be performed on-site unless previously specified.
- Emergency/Egress:
  - In the event of an emergency/egress situation, DMX fixtures designated as Emergency/Egress will have all intensity levels set to 255.
- Occupancy/Vacancy sensor:
  - Verification of proper installation and operation. If a sensor is not installed in accordance with Lutron procedures, Lutron will not continue startup activities on that sensor until the installation issues are corrected.
  - Calibration will be performed at system startup. Final adjustment is the responsibility of the end user since it is very dependent on furniture placement, window treatments, outside weather conditions, and space usage. End user will be trained on making final adjustments. Lutron will not fine-tune occupancy sensors to detect minor movements in the space nor to detect motion that contributes to false-trips.

Meeting 2: On-site system startup (continued)

- Timeclock setup:
  - Lutron will set up the system location, daylight savings, and time of day preparation for event programming.
  - Lutron will set up timeclock events as per the approved submittal drawings or written instructions from the end user or the end user's representative or contractor, in that order of priority.
  - In the absence of instructions, the timeclock will not be programmed. The end user will be trained on how to set up and adjust timeclocks.

Meeting 3: Training Package (Included with the RPST, PST & ST [defined on page 1])

- This includes both a 2-hour contractor training on the last day of commissioning and a customer system orientation visit to train the end user 30-90 days post occupancy and provide system optimization suggestions (LSC-CSO-VST). Any person who will be operating in the system on a regular basis should be in attendance to the customer system orientation visit.
  - It is the responsibility of the person scheduling the startup to ensure the appropriate end users are present for training. Lutron typically does not have these contacts so the contractor will need to provide these.
  - Additional charges will apply if additional visits are required.
  - Any person who will be operating in the system on a regular basis should be in attendance to the customer system orientation visit.
  - Lutron does not provide video media for training sessions. The training may be recorded by others to be provided to the end user.
  - System demonstration and sign-off by the end user.
  - Typical training agenda is attached.

Additional Items

Additional items that are not included with standard startup, but may be purchased – check your quote to verify that an item has been included in your quote. Additional details of each item are available from your Lutron representative and can be added on to any bill of material if requested.

- LSC-AF-VISIT: On-site scene and level tuning visit with the design team or the end user.
- LSC-TRAINING: Customer-site solution training visit for additional time on the job for training the end user.
- LSC-SYSOPT: System optimization visit with end user.
- LSC-WALK: Startup agent or design team system performance-verification walkthrough.
- LSC-AH-SU: After-hours startup.
- LSC-E8S: 8-year, pro-rated enhanced warranty that was included with the purchase of the system startup. Details are supplied within the submittal documentation.
- LSC-E8G and LSC-E8P: Upgraded Enhanced Warranties which include expedited response time and a schedule preventative maintenance visit.
- LSC-INT-VISIT: System and network integration consultation. Typically conducted prior to startup, meeting is intended to meet with other equipment manufacturers, system integrators, and/or IT managers to discuss integration with Lutron equipment.
- LSC-LEED-DOC: Solution performance-verification documentation that describes the pre-functional tests, functional tests, and test results.
- LSC-SENS-LT: Sensor layout and tuning. Ensures that the Lutron sensors are properly positioned and programmed.
- LSC-BATT-RPL-SP: This service solution entails Lutron sending a tech to site and changing out all batteries one (1) time. If additional visits are requested, please specify the number desired and pricing will be provided.

Additional items listed below may be charged for job sites.

- LSC-NS-TRAVEL: Non-standard travel arrangement.
- LSC-RETURN: Job site contact schedules startup but job is not ready when field service engineer arrives, requiring a return visit.
- LSC-CHANGE-ORDER: For on-site or remote service time required to implement changes that fall outside of the scope of work for services quoted and ordered set forth in this document.

Job Name:	Model Numbers:	
Job Number:		

Athena Training: Typical Agenda for the Customer System Orientation Visit

- Any person who will be operating in the system on a regular basis should be in attendance to this training.
- System Orientation (approx. 30 minutes)
  - Overview: Control/sensor/lighting hub locations and functions
  - Model numbers
  - Lutron lexicon: What is an area, scene, fade time, etc.
  - Components
- Athena App Review (approx. 1-2 hours)
  - Navigation of app
  - Making changes in the app
- Preventative Maintenance and Troubleshooting (approx. 1 hour)
- Warranty, Service, and Support (approx. 1 hour)
- Questions and Answers (approx. 30 minutes)

  NOTE: All topics may not be relevant to every system. The topics listed above represent a standard Lutron training agenda.

Contact Information

To schedule a visit, contact Lutron Scheduling Representatives:

Phone: 1.844.LUTRON1, press 3 for the scheduling department

Email: LSCscheduling@lutron.com

Website: www.lutron.com/services

Lutron, Ketra, Athena, EcoSystem, Clear Connect and T-Series are trademarks or registered trademarks of Lutron Electronics Co., Inc. in the US and/or other countries.
Ketra is trademarks or registered trademarks of Lutron Ketra, LLC, in the US and/or other countries.
All other product names, logos, and brands are property of their respective owners.

Job Name:	Model Numbers:	
Job Number:		

3601227b 1 04.04.13

Onsite Scene and Level Tuning (LSC-AF-VISIT)

Onsite Scene and Level Tuning visit to make lighting adjustments per the direction of a lighting designer.

Visit Summary

- Lighting designer will dictate what, if any, changes will be made.
- These adjustments may include light level, fade time, and delay in lighting scenes.
- Facility representative and/or lighting designer will sign off on all work at the completion of the visit.

Additional Information

- Lutron requires 10 business days notice to schedule an onsite visit.
- Coordination of required visit attendees, including lighting designer, is the responsibility of the facility representative.
- Quantity dictates the number of days purchased.
- Facility representative should secure access to the required areas prior to the visit date.
- This visit may occur after hours.
- Should be performed after building is in operation.

Contact Information

Toll-free 24/7 Technical Support Line: 1.800.523.9466

To schedule a visit, contact Lutron Scheduling Representatives:

Phone: 1.800.523.9466, ext. 4439

Email: LSCscheduling@lutron.com

Job Name:	Model Numbers:	
Job Number:		

APPENDIX 7:

TELECOMMUNICATION DATA SHEETS

CF 54 CABLOFIL CABLE TRAY

CABLOFIL®
INNOVATORS IN CABLE MANAGEMENT

8319 State Route 4
Mascoutah IL 62258
Phone: 800-658-4641
618-566-3230
Fax: 618-566-3250
www.cablofil.com

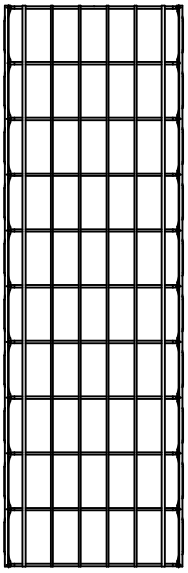

TOP

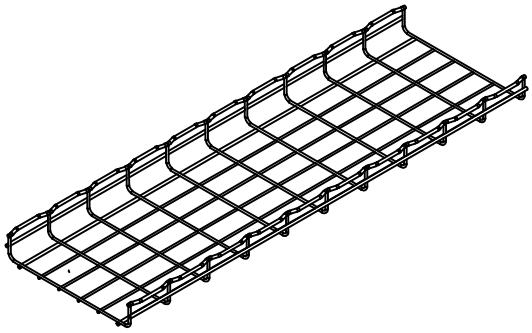

ISOMETRIC

FRONT

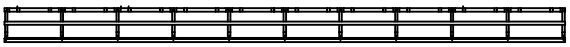

SIDE

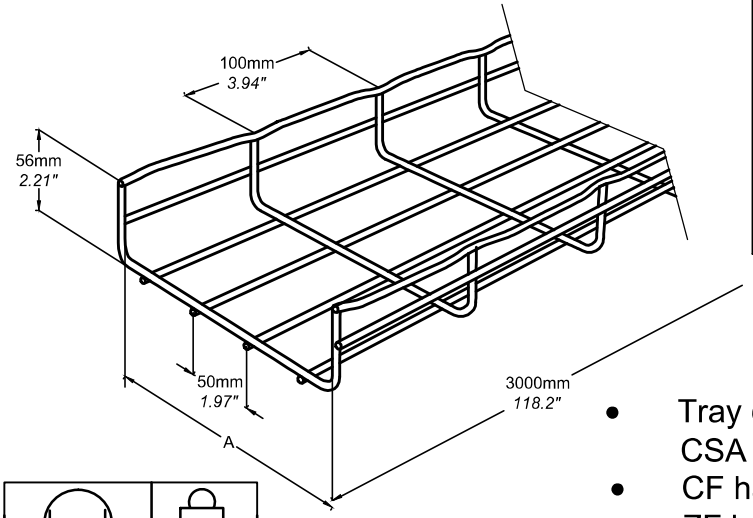

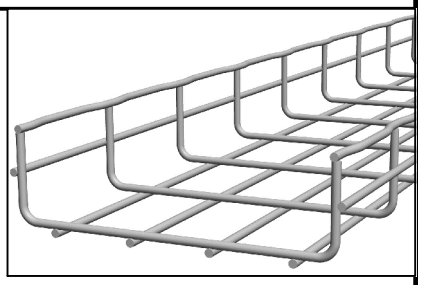

- Tray designed per NEMA VE-1, CSA C22.2 No. 126
- CF has top wave wire (shown)
- ZF has straight top wire

	A in	A mm	lb
ZF* & CF54 50	1.967	50	5.3
ZF* & CF54 100	3.937	100	6.5
ZF* & CF54 150	5.904	150	7.8
ZF* & CF54 200	7.872	200	9.0
ZF* & CF54 300	11.81	300	13.4
ZF* & CF54 400	15.75	400	22.8
ZF* & CF54 450	17.71	450	25
ZF* & CF54 500	19.68	500	24.4
ZF* & CF54 550	21.65	550	25.9
ZF* & CF54 600	23.62	600	27.5
ZF54 750*	29.53	750	32.6
ZF54 900*	35.43	900	37.7

* Top Wire Is Straight Type

BL PE 316L
EZ GC 304L

	Material	Finish
EZ	Carbon Steel ASTM A510 Grade 1008	Electroplated Zinc, ASTM B633
GC	Carbon Steel ASTM A510 Grade 1008	Hot-Dip Galvanized ASTM A123
BL	Carbon Steel ASTM A510 Grade 1008	Black Painted ASTM D 3451
PE	Carbon Steel ASTM A510 Grade 1008	Custom Painted ASTM D 3451
304L	AISI TYPE 304L	Passivated ASTM A 380
316L	AISI TYPE 316L	Passivated ASTM A 380

Copyright©2005 Cablofil, Inc.
Max wire diameter is 5.9mm. Sizes and Quantity vary by tray size.
US PAT# 6138961
CABCS0052

EDRN FAST SPLICE

CABLOFIL®
INNOVATORS IN CABLE MANAGEMENT

8319 State Route 4
Mascoutah IL 62258
Phone: 800-658-4641
618-566-3230
Fax: 618-566-3250
www.cablofil.com

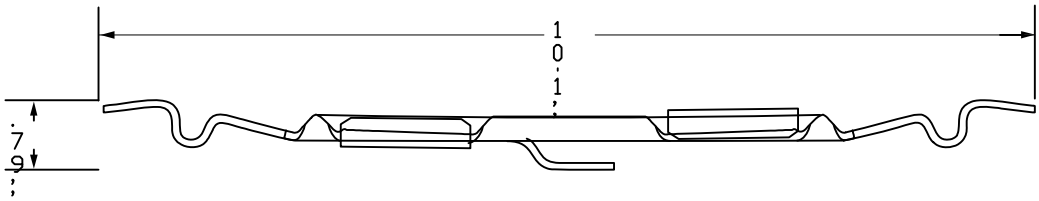

TOP

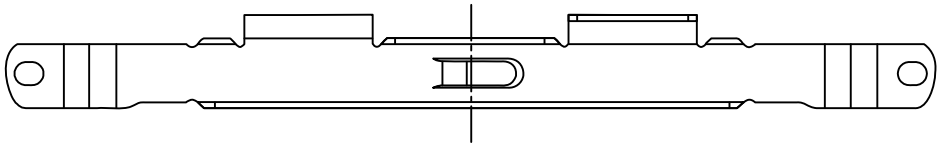

SIDE

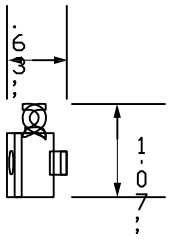

FRONT

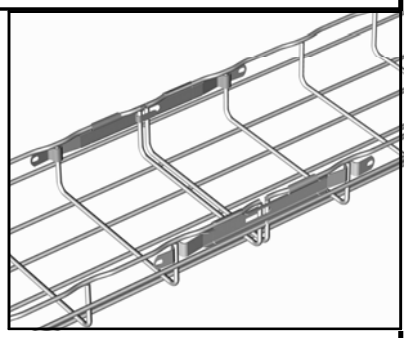

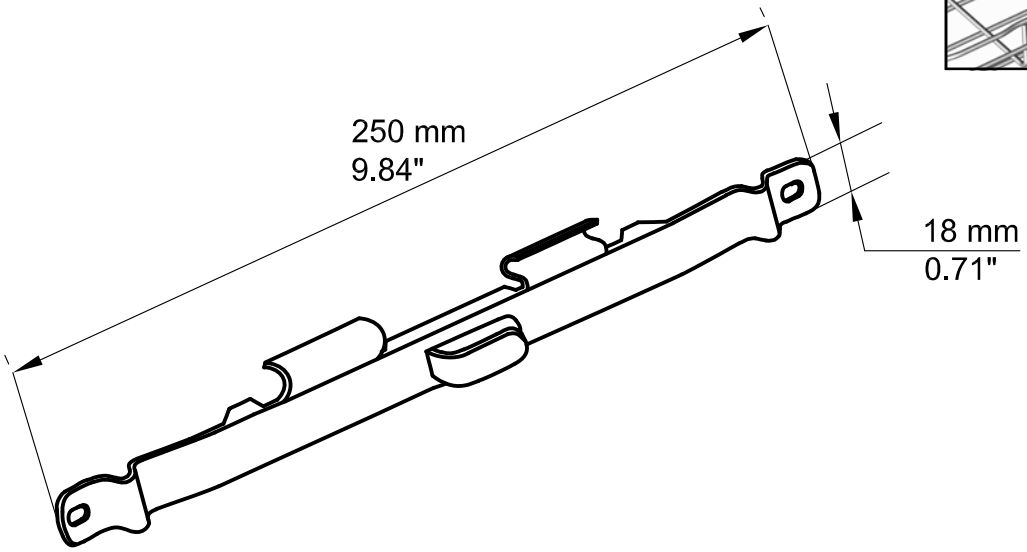

	lb
EDRN	0.154

CLASSIFIED UL

EZ DC 316L BL PE

Copyright©2005 Cablofil, Inc.

Product Cut Sheet

UNIVERSAL HORIZONTAL CABLE MANAGER

Create an attractive and highly functional horizontal pathway for patch cords and multimedia applications using coax, copper and fiber optic cables. After routing the cables or cords, simply snap on the cover for a clean, professional appearance.

- Extra-wide and contoured cable guide fingers, spaced 1.75" (44.5 mm) apart, separate and organize patch cords for quick and easy moves, adds and changes.
- The cable guides are offset to ensure proper bending radii of patch cables, even hooded patch cables
- Patented fingers meet the requirements of UL 94V-0 flammability rating
- Snap-on covers are easy to use and open 180° up or down with adjacent installation
- Covers and panel have a black powder-coat textured finish, reducing fingerprints and smudges

Estimated cable capacities:
See the cable fill table at www.chatsworth.com/cablefill

1U
2U
3U

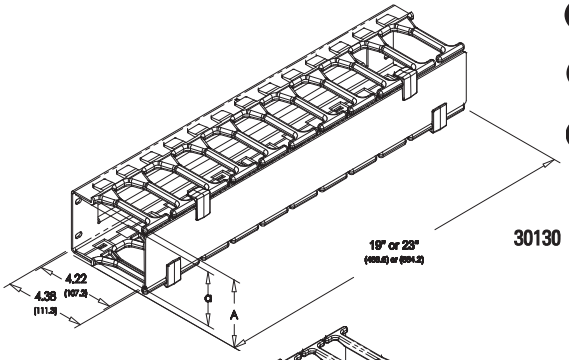

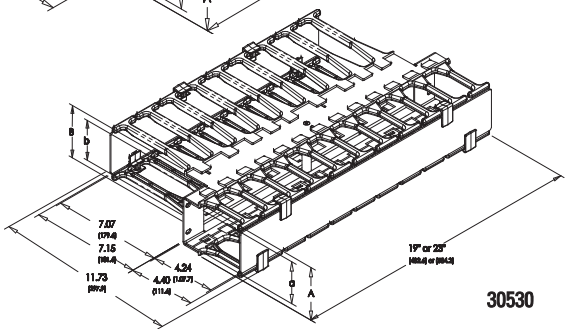

Double-Sided Cable Manager		
Part Number	Description H x W x D in (mm)	Shipping Weight lb (kg)
30529-X19	1U x 19 x 11.73 (297.9)	5 (2.3)
30529-X23	1U x 23 x 11.73 (297.9)	6 (2.7)
30530-X19	2U x 19 x 11.73 (297.9)	6 (2.7)
30530-X23	2U x 23 x 11.73 (297.9)	7 (3.2)
30531-X19	3U x 19 x 11.73 (297.9)	6 (2.7)
30531-X23	3U x 23 x 11.73 (297.9)	7 (3.2)

Single-Sided Cable Manager		
Part Number	Description H x W x D in (mm)	Shipping Weight lb (kg)
30139-X19	1U x 19 x 4.96 (126.0)	2 (0.9)
30139-X23	1U x 23 x 4.96 (126.0)	3 (1.4)
30130-X19	2U x 19 x 5.14 (130.6)	3 (1.4)
30130-X23	2U x 23 x 5.14 (130.6)	4 (1.8)
30131-X19	3U x 19 x 5.14 (130.6)	4 (1.8)
30131-X23	3U x 23 x 5.14 (130.6)	5 (2.3)
30339-X19*	1U x 19 x 6.26 (159.0)	3 (1.4)
30339-X23*	1U x 23 x 6.26 (159.0)	3 (1.4)
30330-X19*	2U x 19 x 6.44 (163.6)	4 (1.8)
30330-X23*	2U x 23 x 6.44 (163.6)	5 (2.3)
30331-X19*	3U x 19 x 6.44 (163.6)	5 (2.3)
30331-X23*	3U x 23 x 6.44 (163.6)	6 (2.7)

*X=color: 7=Black, E=Glacier White. *Note: Deep Panel is used when Double-Sided MCS Master Cabling Sections are center-mounted on 3"D racks.*

Part Number		Dimensions			
19"	23"	A	a	B	b
30139-719	30139-723	1.73 (43.9)	1.02 (25.9)		
30130-719	30130-723	3.48 (88.4)	2.77 (70.4)		
30131-719	30131-723	5.23 (132.8)	4.52 (114.8)		
30339-719	30339-723	1.73 (43.9)	1.02 (25.9)		
30330-719	30330-723	3.48 (88.4)	2.77 (70.4)		
30331-719	30331-723	5.23 (132.8)	4.52 (114.8)		
30529-719	30529-723	1.73 (43.9)	1.00 (25.4)	1.67 (42.4)	0.85 (21.6)
30530-719	30530-723	3.46 (87.9)	2.75 (69.9)	3.42 (86.9)	2.60 (66.0)
30531-719	30531-723	5.23 (132.8)	4.50 (114.3)	5.17 (131.3)	4.44 (112.8)

Use Universal Horizontal Cable Manager in conjunction with the CPI Patch Panel Wire Management Bar (P/N 12176-X01) and any of CPI's vertical cabling sections for clean, organized cable management.

CHATSWORTH PRODUCTS

©2013 Chatsworth Products, Inc. All rights reserved. CPI, CPI Passive Cooling, GlobalFrame, MegaFrame, Saf-T-Grip, Seismic Frame, SlimFrame, TeraFrame, Cube-iT Plus, Evolution, OnTrac, Velocity and QuadraRack are federally registered trademarks of Chatsworth Products. eConnect and Simply Efficient are trademarks of Chatsworth Products.
All other trademarks belong to their respective companies. Rev.3 07/13

Product Cut Sheet

CABLE RUNWAY ELEVATION KIT

Supports Cable Runway above a continuous row of CPI Racks or Cabinets of varying height and provides additional space between the tops of the racks or cabinets and the cable runway, which can create smoother transition of cables.

- Three ranges of incremental elevation
- Can be mounted perpendicular or parallel
- Rack kit includes a single pair of brackets and assembly hardware
- Rack kits attach to the top of the rack with a Rack-To-Runway Mounting Plate (P/N 10595 or 12121, sold separately)
- Cabinet kits include two pairs of brackets and assembly hardware
- Cabinet kits attach directly to the top of the cabinet

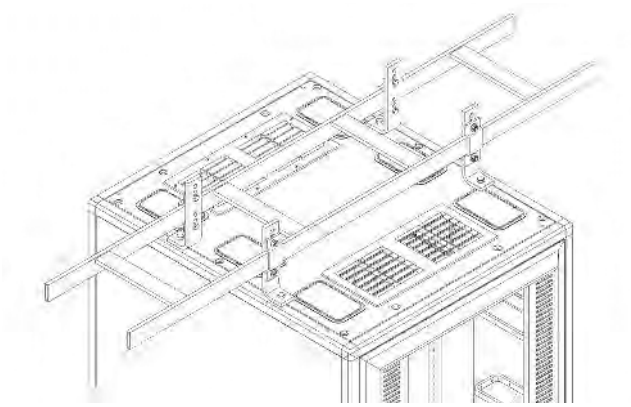

Rack	Shipping Weight - lb (kg)	Cabinet	Shipping Weight - lb (kg)
2", 2.5" or 3"H (50 mm, 64 mm or 80 mm) Elevation			
10506-X02	2 (0.9)	10506-X12	2 (0.9)
4", 5" or 6"H (100 mm, 130 mm or 150 mm) Elevation			
10506-X06	3 (1.4)	10506-X16	5 (2.3)
10", 11" or 12"H (250 mm, 280 mm or 300 mm) Elevation			
10506-X08	2 (0.9)	10506-X18	4 (1.8)

X=color: 1=Gray, 2=Computer Beige, 7=Black, E=Glacier White. Kits have gold colored hardware. Gray (-1) and Black (-7) kits have black colored hardware.

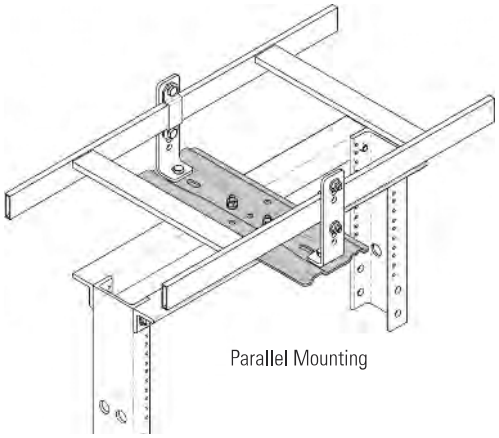

Parallel Mounting

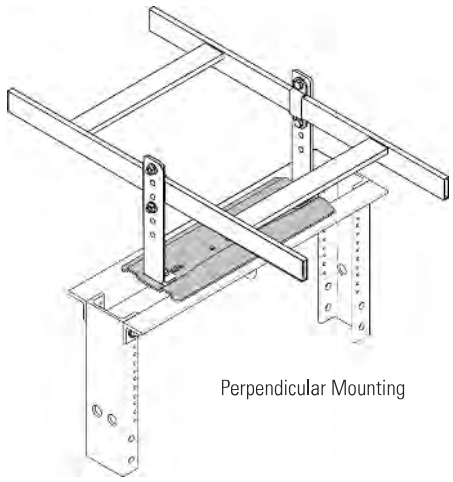

Perpendicular Mounting

800-834-4969 in U.S. & Canada • www.chatsworth.com

CHATSWORTH PRODUCTS

©2013 Chatsworth Products, Inc. All rights reserved. CPI, CPI Passive Cooling, GlobalFrame, MegaFrame, Saf-T-Grip, Seismic Frame, SlimFrame, TeraFrame, Cube-iT Plus, Evolution, OnTrac, Velocity and QuadraRack are federally registered trademarks of Chatsworth Products. eConnect and Simply Efficient are trademarks of Chatsworth Products. All other trademarks belong to their respective companies. 6/13

Product Cut Sheet

M-SERIES MEGAFRAME® CABINET SYSTEM

The M-Series MegaFrame® Cabinet System is made from aluminum and can be shipped partially assembled in a reduced package size making it easier to move and store when space is limited on the job site. The M-Series MegaFrame Cabinet System supports a vast array of potential applications. The cabinet is available in a variety of sizes to match equipment and facility requirements.

Specifications:

- Available in two widths, three heights and four depths (24 frame sizes)
- Provides front and rear support for 19" EIA or 23" wide equipment
- Mounting rails are fully adjustable and rack-mount units (U) are marked and numbered to simplify equipment installation
- Includes one vertical cable manager, one mounting bracket kit for a vertical power distribution unit (PDU), one baying kit, leveling feetand floor attachment clamps
- Order with or without a top panel, side panels and doors
- Top panels have six cable access holes and a vented center area that accepts an accessory fan kit
- Side panels are solid and include a keyed lock
- Doors are available in a variety of solid or vented styles, are reversible to open from the right or left and include a keyed lock
- Aluminum frame, bolted construction: delivers partially or fully assembled
- Load rating: 2000 lb (907.2 kg)
- UL Listed

Height Dimensions			
All Cabinet Styles	**72" (1830 mm)**	**78" (1980 mm)**	**84" (2130 mm)**
Usable Vertical Panel Space	38 RMU, 66.50" (1689.1 mm)	42 RMU, 73.50" (1866.9 mm)	45 RMU, 78.75" (2000.3 mm)
Overall Height without Leveling Feet	72.02" (1829.3 mm)	78.02" (1981.7 mm)	84.02" (2130.0 mm)
Overall Height with Leveling Feet	72.92" (1852.2 mm)	78.92" (2004.6 mm)	84.92" (2157.0 mm)
Overall Height with Casters	75.70" (1922.8 mm)	81.70" (2075.2 mm)	87.70" (2230.0 mm)
Frame Vertical Opening	67.90" (1724.7 mm)	73.90" (1877.1 mm)	79.90" (2029.5 mm)

Width Dimensions		
Usable Equipment Panel Width	**19" EIA**	**23" EIA**
Overall Width	27.32" (693.9 mm)	31.32" (795.5 mm)
Frame Horizontal Opening	20.20" (513.1 mm)	24.20" (614.7 mm)

Depth Dimension Cabinet Only (With Doors)				
Nominal Cabinet Depth	**24" (610 mm)**	**30" (760 mm)**	**36" (910 mm)**	**39" (990 mm)**
Maximum Mounting Depth - Rail to Rail	24.00" (609.6 mm)	30.00" (762.0 mm)	36.00" (914.4 mm)	39.00" (990.6 mm)
Overall Depth - Inside Door to Inside Door	27.22" (691.4 mm)	33.22" (843.8 mm)	39.22" (996.2 mm)	42.22" (1072.4 mm)
Overall Depth - Door Face to Door Face	27.62" (701.5 mm)	33.62" (853.9 mm)	39.62" (1006.3 mm)	42.62" (1082.5 mm)

Depth Dimension Frame Only (Without Doors)				
Nominal Cabinet Depth	**24" (610 mm)**	**30" (760 mm)**	**36" (910 mm)**	**39" (990 mm)**
Maximum Mounting Depth - Rail to Rail	24.00" (609.6 mm)	30.00" (762.0 mm)	36.00" (914.4 mm)	39.00" (990.6 mm)
Overall Depth	26.13" (663.7 mm)	32.13" (816.1 mm)	38.13" (968.5 mm)	41.13" (1044.7 mm)

Shipping Weights:	72" (1830 mm)	78" (1980 mm)	84" (2130 mm)
Minimum	152 lb (68.9 kg)	152 lb (68.9 kg)	155 lb (70.3 kg)
Maximum	251 lb (113.9 kg)	262 lb (118.8 kg)	287 lb (130.2 kg)

Each Cabinet Includes:

(1) Four-Post Frame (anodized aluminum finish)
(4) Vertical Mounting Rails
(2) Locking, East-To-Remove Side Panels
(1) Locking, Reversible Front Door
(1) Locking, Reversible Rear Door
(1) Vented Top Panel & Six Cable Access Ports
(2) Vertical Half-Height Cable Manager
(1) Vertical PDU Mounting Bracket Kit
(4) Leveling Feet
(1) Multi-Bay Attachment Hardware Kit
(4) Floor Anchor Clamps
(1) Bag of Mounting Hardware:
- Tapped Rails: (50) #12-24 screws
- Square-punched rails: (16) M6 and (25) #12-24 cage nuts and screws

800-834-4969 in U.S. & Canada • www.chatsworth.com

US & Canada
+1-800-834-4969
Toronto, Ontario, Canada
+905-850-7770
chatsworth.com

Latin America
+52-55-5203-7525
Toll Free within Mexico
01-800-01-7592
chatsworth.com.co

Europe
+44-1628-524-834
chatsworthproducts.co.uk

Middle East & Africa
Dubai, UAE
+971-4-2602125
chatsworthproducts.co.uk

Asia Pacific
+86 21 6880-0266
chatsworth.com.cn

techsupport@chatsworth.com

CHATSWORTH PRODUCTS

©2015 Chatsworth Products, Inc. All rights reserved. All trademarks belong to their respective companies. 10/15

Product Cut Sheet

M-SERIES MEGAFRAME® CABINET SYSTEM

Part Number Configurator

When ordering an **M-Series Cabinet,** the part number is always preceded by the letter **M**.

1st Digit - Width
How wide is your equipment mounting requirement?

2nd Digit - Height
How tall a cabinet do you need? Call tech support for 8′ (2.4 m) cabinet part numbers.

3rd Digit - Depth
What is your maximum mounting depth requirement?

4th Digit - Cabinet Style
Choose your rail style and panel requirement. CPI offers tapped 12-24, square-punched vertical mounting rails, Sun® and IBM® rails. Rails are also available in half heights as an accessory.

5th Digit - Color
Color refers to side panels, vertical mounting rails and metal/perforated metal door panels. Frame is anodized aluminum.

6th Digit - Doors
Appearance and ventilation requirements will determine your door style. The plexiglass door is a "smoked" plexiglass.

7th Digit - Shipping
CPI Cabinets are available partially assembled (or "knocked down") and fully assembled.

Cabinets are also available as a frame only (bottom matrix). For further assistance call 800-834-4969.

CABINET - 72", 78" and 84" Heights (1830 mm, 1980 mm and 2130 mm)

Example Cabinet Part Number: M1221-112

prefix	1st digit	2nd digit	3rd digit	4th	5th digit	6th digit	7th digit	
	Width	**Height**	**Depth**	**Style**		**Color****	**Doors**	**Shipping**
M	1=19" 2=23"	0=84" (2130 mm) 1=78" (1980 mm) 2=72" (1830 mm)	2=24" (610 mm) 3=30" (760 mm) 4=39" (990 mm) 5=36" (910 mm)	0,1,3,4		1=Gray 2=White 7=Black	0, 1, 2, 3, 4	1=Knocked Down 2=Assembled

Cabinet Style
0=Tapped rails, top & side panels
1=Tapped rails, top & no side panels
3=Square-punched rails, top & sides
4=Square-punched rails, top, no sides

Doors
0=No front or rear doors
1=Plexiglass front/metal rear
2=Metal front/metal rear
3=Vented plexiglass front/perforated metal rear
4=Perforated metal front/perforated metal rear

(Perforated metal doors are 63% open for high airflow)

FRAME ONLY - 72", 78" and 84" (1830 mm, 1980 mm and 2130 mm) Frame Selections - No Tops, Side or Doors

Example Frame Part Number: M1222-102

prefix	1st digit	2nd digit	3rd digit	4th digit	5th digit	6th digit	7th digit	
	Width	**Height**	**Depth**		**Style**	**Color****	**Doors**	**Shipping**
M	1=19" 2=23"	0=84" (2130 mm) 1=78" (1980 mm) 2=72" (1830 mm)	2=24" (610 mm) 3=30" (760 mm) 4=39" (990 mm) 5=36" (910 mm)		2, 5	1=Gray 2=White 7=Black	0=None	1=Knocked Down 2=Assembled

Cabinet Style
2=Tapped rails, no top or side panels
5=Square-Punched rails, no top or side panels

**Server rail styles are only available on cabinets 36" (910 mm) or 39" (990 mm) in depth.*
***Color refers to mounting rails side panels and metal/perforated metal door panels. Frame is silver-colored anodized aluminum.*

CHATSWORTH PRODUCTS, INC.

©2015 Chatsworth Products, Inc. All rights reserved. Chatsworth Products, CPI, CPI Passive Cooling, eConnect, MegaFrame, Saf-T-Grip, Seismic Frame, SlimFrame, TeraFrame, GlobalFrame, CUBE-iT PLUS, Evolution, OnTrac, QuadraRack and Velocity are federally registered trademarks of Chatsworth Products. Simply Efficient is a trademark of Chatsworth Products. All other trademarks belong to their respective companies. 10/15

Product Cut Sheet

ELECTRONIC LOCK KIT, SYSTEM 1000

Each lock can be programmed with multiple access codes eliminating keys and allowing a master code to open all cabinets, while different user codes open individual cabinets or groups of cabinets.

Key Features:

- Standalone electronic keypad lock (not networked, no audit trail)
- Three user levels with programmable access codes:
  - 8-digit Master code – full administrative rights
  - 8-digit Sub-Master code – set/delete user code
  - 4-digit User code
- 3 Access codes: 1 Master code, 1 Sub-Master code, 1 User code per lock
- Approximately 15,000 openings per battery change
- Low Battery warning LED
- External battery override with 9 VDC battery
- Powered by 2 x 1.5 VDC AAA batteries

Specifications:

- Includes: Lock handle, door mounting plate and hardware
- Material: zinc-alloy handle, steel mounting plate
- Finish: Silver-colored handle, black mounting plate

Ordering:

- Select part number to match the cabinet, door style and type of latch.
- Use retrofit kits to replace existing handles.

Electronic Lock Kit, System 1000 For F-Series TeraFrame Gen 3 Cabinet System					
Part Number – Door/Style			Latch Type	Door Height (U)	Shipping Weight lb (kg)
Front Door Single, Perf.	Rear Door, Single, Solid	Rear Door, Double, Perf.			
39222-C00	39223-C00	N/A	Single-Point	All	3 (1.4)
39226-C00	39227-C00	39225-C00	Two-Point	42	5 (2.3)
39226-C01	39227-C01	39225-C01	Two-Point	43	5 (2.3)
39226-C02	39227-C02	39225-C02	Two-Point	44	5 (2.3)
39226-C03	39227-C03	39225-C03	Two-Point	45	5 (2.3)
39226-C04	39227-C04	39225-C04	Two-Point	46	5 (2.3)
39226-C05	39227-C05	39225-C05	Two-Point	47	5 (2.3)
39226-C06	39227-C06	39225-C06	Two-Point	48	6 (2.7)
39226-C07	39227-C07	39225-C07	Two-Point	49	6 (2.7)
39226-C08	39227-C08	39225-C08	Two-Point	50	6 (2.7)
39226-C09	39227-C09	39225-C09	Two-Point	51	6 (2.7)
39226-C10	39227-C10	39225-C10	Two-Point	52	6 (2.7)
Retrofit Kits					
39222-C00	39223-C00	N/A	Single-Point	Any	3 (1.4)
39226-C99	39227-C99	39225-C99	Two-Point	Any	3 (1.4)

Note: Electronic Lock Kit includes a door latch and mounting hardware. Order the door separately. Use retrofit electronic lock kits to replace an existing swing handle on the cabinet door. Use the kits listed at the top of the order matrix with new doors. To order the lock kit pre-installed on the F-Series TeraFrame Gen 3 Cabinet door, use the CPI Product Configurator on the CPI website.

Electronic Lock Kit, System 1000 For GF-Series GlobalFrame Gen 2 Cabinet System					
Part Number – Door/Style			Latch Type	Door Height (U)	Shipping Weight lb (kg)
Front Door Single, Perf.	Rear Door, Single, Solid	Rear Door, Double, Perf.			
39224-C00	39223-C00	39225-C00	See Note	42	5 (2.3)
39224-C00	39223-C00	39225-C03	See Note	45	5 (2.3)
39224-C00	39223-C00	39225-C06	See Note	48	6 (2.7)
39224-C00	39223-C00	39225-C10	See Note	52	6 (2.7)
Retrofit Kits					
39224-C00	39223-C00	39225-C99	See Note	Any	3 (1.4)

Note: On GlobalFrame, all latch kits are single-point except P/N 39225 which is two-point for the double rear door. Use retrofit electronic lock kits to replace an existing swing handle on the cabinet door. Use the kits listed at the top of the order matrix with new doors.

Electronic Lock Kit, System 1000 For ThinLine II Wall-Mount Cabinet		
Part Number	Description	Shipping Weight lb (kg)
13830-700	Electronic Lock Kit, System 1000, Single-Point Latch	3 (1.4)

CHATSWORTH PRODUCTS

©2013 Chatsworth Products, Inc. All rights reserved. CPI, CPI Passive Cooling, GlobalFrame, MegaFrame, Saf-T-Grip, Seismic Frame, SlimFrame, TeraFrame, Cube-iT Plus, Evolution, OnTrac, Velocity and QuadraRack are federally registered trademarks of Chatsworth Products. eConnect and Simply Efficient are trademarks of Chatsworth Products. All other trademarks belong to their respective companies.12/13/NB

1880ECA1-100

100 PAIR - INDOOR BET - 110/110 - COVER & SPLICE CHAMBER

Underwriters Laboratories

Product Specifications

UL497 Primary Protector for Communication Circuits

NAFTA Country of Origin: CANADA - All Models are "Buy America Act" Approved.

These 16 AWG steel building entrance terminals feature an industry standard 110 - style connector for both the input and output terminals. Also included are multiple external and internal ground lugs. UL approved standard on all terminals. Standard 5-pin protection modules, available in gas tube, solid state and hybrid versions, can be purchased separately. Call for more detailed information on RDUP/RUS-listed units.

Features & Benefits

- 16 AWG Powder Coated Steel Construction
- Equipped with an Internal 26 AWG Fuse Link
- External Ground Connectors Accept 6 - 14 AWG Wire
- Industry Standard 5 Pin Design
- Exceeds UL497 Primary Protection Standards
- Stackable with Connection Grommets Included
- 110 Connector Accepts 22 - 26 AWG Wire

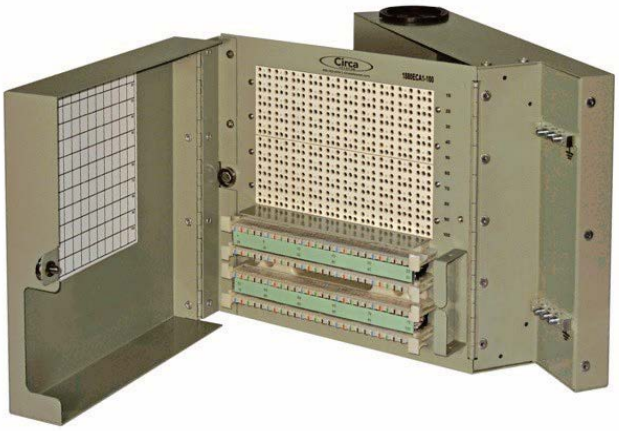

1880ECA1-100

Ordering Information

Model Number	Stock Code	Pair Count	Input	Output	Dimensions (H" x W" x D")	Weight (lbs)
1880ECA1-100	329029	100	110	110	11.00 x 14.75 x 6.25	15

Circa Telecom, Inc ® 2013 - Version 1.03

6914 W. Linebaugh Ave - Tampa, Fl 33625
Phone 800.783.6556 - Fax 813.676.2060 - Email circatech@circatelecom.com - www.circatelecom.com

1880ECA1-100

100 PAIR - INDOOR BET - 110/110 - COVER & SPLICE CHAMBER

Underwriters Laboratories

Physical Dimensions

UL497 Primary Protector for Communication Circuits

11.00 x 14.75 x 6.25
(H" x W" x D")

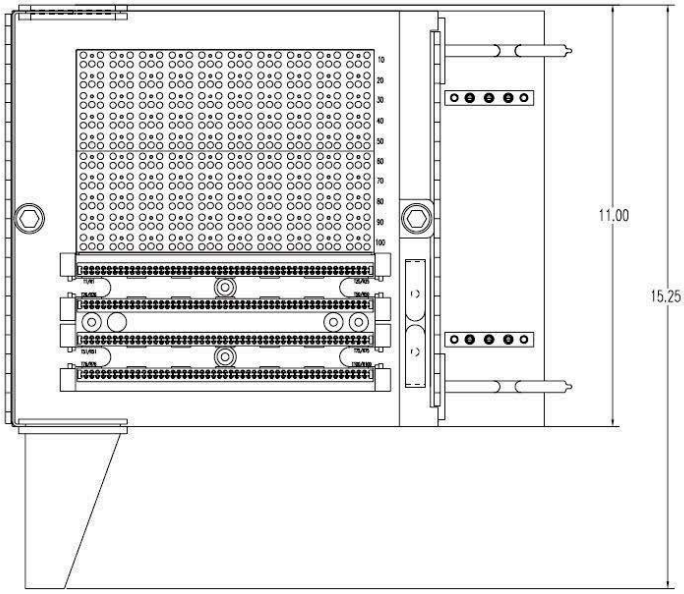

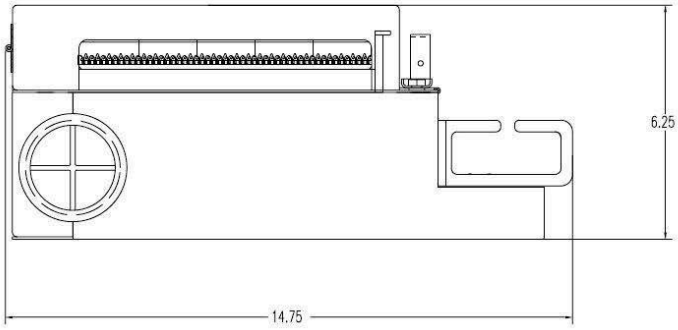

Notes

Installation:

Indoor Wall Mount

Previous Model Number : 1880ECA1-100G

Splice Chamber: Separate enclosure and cover for OPS gel filled Input cable

Circa Telecom, Inc ® 2013 - Version 1.03

6914 W. Linebaugh Ave - Tampa, Fl 33625
Phone 800.783.6556 - Fax 813.676.2060 - Email circatech@circatelecom.com - www.circatelecom.com

3B1E & 4B1E

5 PIN - Heavy Duty Gas Tube - Surge Protection Module

Product Specifications

UL 497 Primary Protector for Communication Circuits

The 3B1E is a premium 5 pin, 3-element gas tube protector module that is designed to provide excellent transient and power fault protection for most standard telephone line applications.

The 3-element gas tube provides superior balanced protection. An overvoltage condition on either side of the circuit will result in the triggering of the gas tube. The ionized gas in the common chamber provides a low impedance path to ground for both sides of the circuit.

The 4 - Series features PTC (positive temperature coefficient) technology. These optional self-resetting current limiters provide effective protection from 'sneak current' faults. The PTC is vastly superior to the heat coil solution, which requires that the module be replaced after each 'sneak current' event.

- Heavy Duty Surge Handling Capability
- Superior Common Chamber Design
- Balanced Operation
- UL Listed and RUS Approved
- Design to Exceed Telcordia Standards
- Integrated Test Points
- ISO 9001 Certified Manufacturer

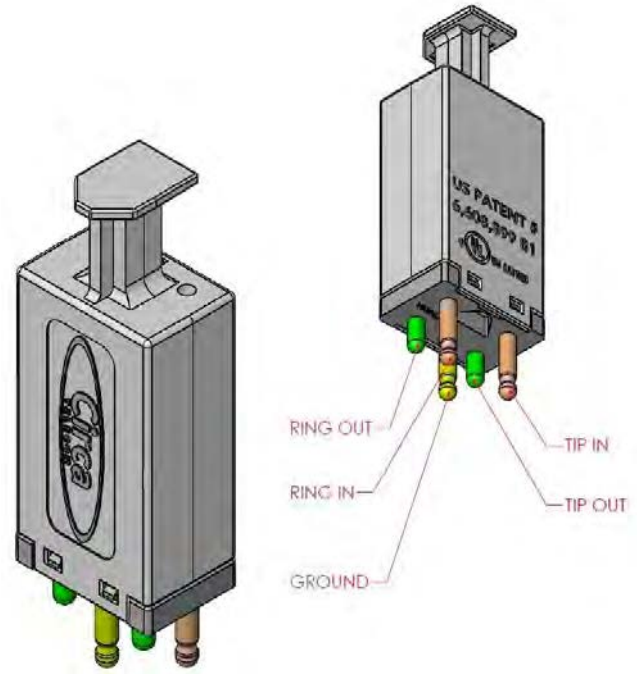

Ordering Information

Model Number	Stock Code	Application	Color	Clamping Voltage
3B1E	770200	Life Safety and Central Office Environments	Black	350V
4B1E	770201	Life Safety and Central Office Environments w/PTC Current Limiter	Black	350V
3B3E	770202	Life Safety and Central Office Environments	Red	350V

RUS Approved Material - 2011 Edition RUS Publication 344-2 - Section 4.1.3 and 4.2.1

Circa Telecom, Inc ® 2011 - Version 1.02

6293 W. Linebaugh Ave - Tampa, Fl 33625
Phone 800.783.6556 - Fax 813.676.2060 - Email circatech@circatelecom.com - www.circatelecom.com

3B1E & 4B1E

5 PIN - Heavy Duty Gas Tube - Surge Protection Module

Underwriters Laboratories

Product Specifications

UL 497 Primary Protector for Communication Circuits

Module	3B1E	4B1E
DC Break Over - *@ 2kVps*	*350V*	*350V*
Impulse Breakdown Voltage		
@ 100V/µS	*750V*	*750V*
@ 1kV/µS	*900V*	*900V*
Response Time	*4000 - 5000 nsec*	*4000 - 5000 nsec*
DC Holdover Voltage	*135V < 150ms*	*135V < 150ms*
Surge Life [1, 2]		
@ 10A @ 10 x 1000/µS	*> 3000 Operations*	*> 3000 Operations*
@ 100A @ 10 x 1000/µS	*> 300 Operations*	*> 300 Operations*
@ 10kA @ 10 x 1000/µS	*10 Operations*	*10 Operations*
@ 20kA @ 10 x 1000/µS	*1 Operation*	*1 Operation*
@ 65A rms, 11 cycles, 130A	*1 Operation*	*1 Operation*
@ 10A rms, 1 sec, 20A	*10 Operations*	*10 Operations*
Capacitance		
1V rms @ 1Khz, 50V DC	*10 pF max*	*10 pF max*
Insulation Resistance		
@ 50V DC	*100M Ω*	*100M Ω*
Fail-Safe Operation		
@ 1.0A rms	*< 50 Seconds*	*< 50 Seconds*
@ 5.0A rms	*< 15 Seconds*	*< 15 Seconds*
@20A rms	*< 10 Seconds*	*< 10 Seconds*
@ 60A rms	*< 3 Seconds*	*< 3 Seconds*
Current Limiters (4 Series with PTC)		
Hold Current @ 20º C	*N/A*	*145 mA*
Line Series Resistance	*N/A*	*4 - 6 Ω*

3B1E - Symmetrical

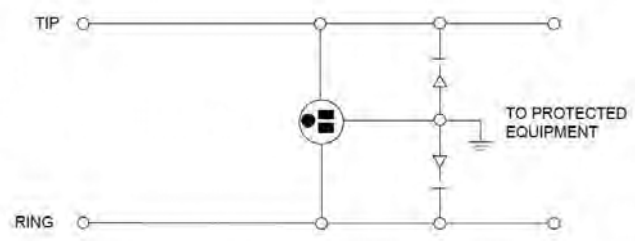

4B1E - Symmetrical

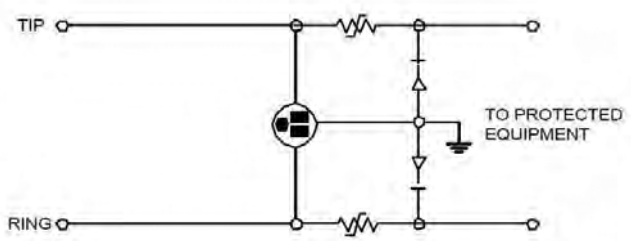

Circa Telecom, Inc ® 2011 - Version 1.02

6293 W. Linebaugh Ave - Tampa, Fl 33625
Phone 800.783.6556 - Fax 813.676.2060 - Email circatech@circatelecom.com - www.circatelecom.com

3B1E & 4B1E

5 PIN - Heavy Duty Gas Tube - Surge Protection Module

Physical Dimensions

UL 497 Primary Protector for Communication Circuits

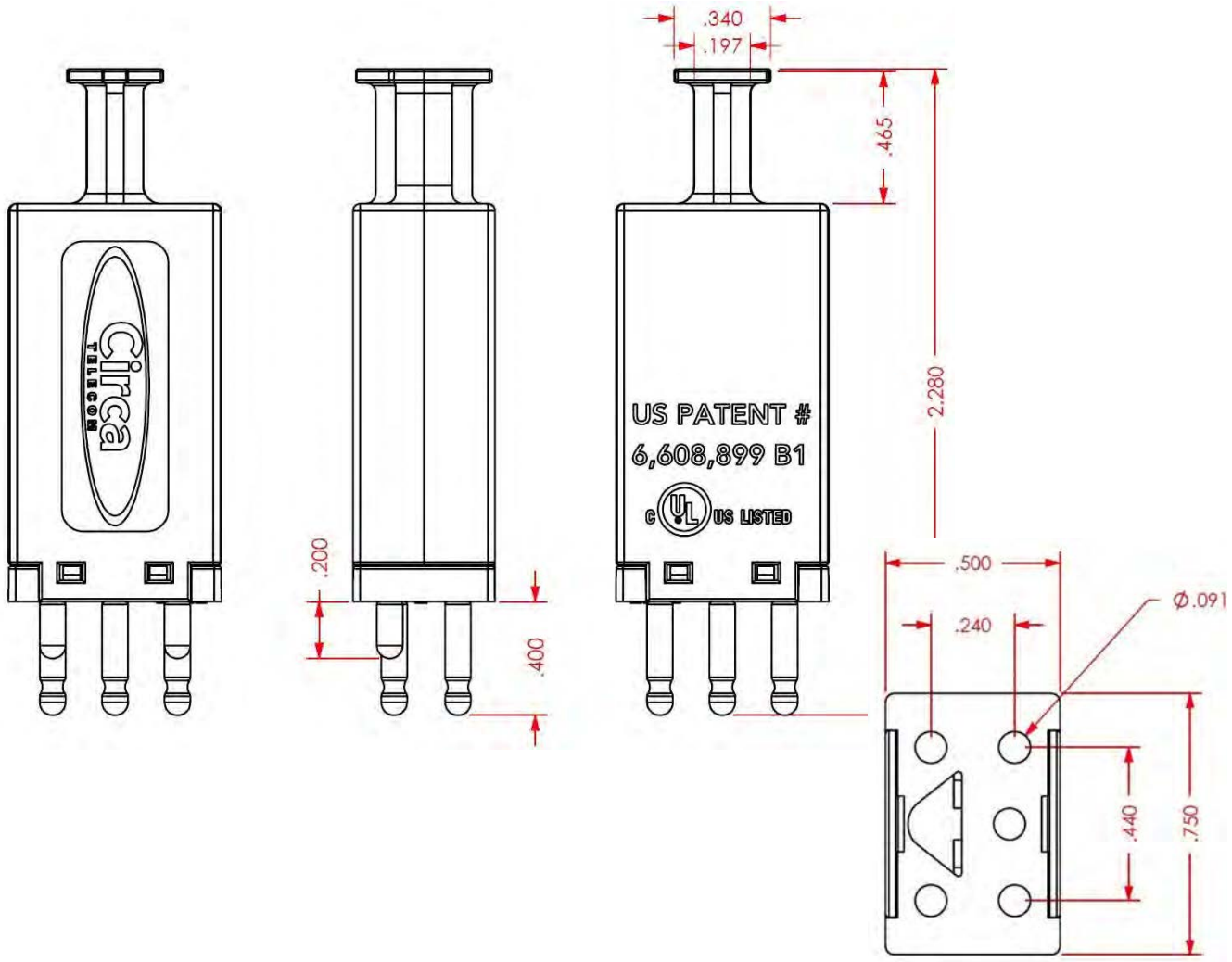

Notes

(1) Total surge rating is 2x listed with respect to ground during simultaneous surge.

(2) Meets Bellcore TR-NWT-000974 service life requirements.

Pin alloy refers to tip and ring pins. Unless otherwise noted, all ground pins are tin.

Previous Model Numbers: CT3B1E-BAL, C3B1E, C3B1EW, 3B1EW, 3C1E, 3C1EW

RUS Approved Material - 2011 Edition RUS Publication 344-2 - Section 4.1.3 and 4.2.1

Circa Telecom, Inc ® 2011 - Version 1.02

6293 W. Linebaugh Ave - Tampa, Fl 33625
Phone 800.783.6556 - Fax 813.676.2060 - Email circatech@circatelecom.com - www.circatelecom.com

SEALPIC®-FSF

RDUP PE-89

PRODUCT DESCRIPTION

SEALPIC®-FSF Cables are designed for low risk direct burial or duct applications where protection from moisture is required and aluminum shielding is desired. SEALPIC-FSF may be used aerially, but must be attached to a support strand.

APPLICATIONS

- Low risk direct burial
- Underground conduit
- Lashed aerial

FEATURES	BENEFITS
Twisted into pairs with varying lay lengths	Minimizes crosstalk
Core wrap	Provides thermal protection
Filled core	Moisture resistant
Fully flooded shield interfaces	Inhibits corrosion and water migration
Black, polyethylene jacket	Provides a tough, protective covering designed to withstand exposure to direct sunlight, atmospheric temperature changes and stresses expected in standard installations

SPECIFICATIONS

Conductor	Solid annealed copper
Insulation	Dual insulation consisting of an inner layer of foamed, natural polyolefin over which is applied a solid (skin) layer of polyolefin colored in accordance with industry standards
Twisted Pairs	Individual insulated conductors; twisted into pairs with varying lay lengths; specific color combinations provide pair identification
≤ 25-Pair Core	Pairs are assembled into a cylindrical core
> 25-Pair Core	Cables larger than 25-pair are assembled into units, which are then used to assemble the core; units are identifiable using color-coded binders
Filling Compound	80°C ETPR compound, completely filling the interstices between the pairs and under the core wrap
Core Wrap	Non-hygroscopic, dielectric tape applied over the core
Shield	Corrugated, copolymer coated, 8 mil aluminum tape applied longitudinally with an overlap; flooded shield interfaces
Jacket	Black, polyethylene
Jacket Marking	Identifying information includes a telephone handset, cable code, pair count, AWG, date of manufacture and sequential length markings at 2 foot intervals
Standards Compliance	ANSI/ICEA S-84-608-2011 RDUP 7 CFR 1755.890 (PE-89) RoHS-compliant

ELECTRICAL SPECIFICATIONS

Number of Pairs	Average Mutual Capacitance @ 1,000 Hz nF/mile (nF/km)	Capacitance Unbalance Pair to Pair @ 1 kHz		Capacitance Unbalance Pair to Ground @ 1 kHz	
		Maximum Individual pF @ 1 kft (pF @ 1 km)	Maximum RMS pF @ 1 kft (pF @ 1 km)	Maximum Individual pF @ 1 kft (pF @ 1 km)	Maximum Average pF @ 1 kft (pF @ 1 km)
12 or less	83 ± 7 (52 ± 4)	80 (145)	-	800 (2,625)	-
Over 12	83 ± 4 (52 ± 2)	80 (145)	25 (45)	800 (2,625)	175 (574)

Conductor Size AWG (mm)	Minimum Insulation Resistance @ 68°F (20°C) gigohm-mile (gigohm-km)	Maximum Average Attenuation* 772 kHz @ 68°F (20°C) dB/kft (dB/km)	Maximum Conductor Resistance @ 68°F (20°C) Ohms/sheath mile (km)	DC Resistance Unbalance Maximum %		Dielectric Strength DC Potential – Volts	
				Average	Individual Pair	Conductor to Conductor	Conductor to Shield
19 (0.90)	1.0 (1.6)	3.2 (10.5)	45.0 (28.0)	1.5	5.0	4,500	10,000
22 (0.64)	1.0 (1.6)	4.5 (14.8)	91.0 (56.5)	1.5	5.0	3,600	10,000
24 (0.51)	1.0 (1.6)	5.6 (18.4)	144.0 (89.5)	1.5	5.0	3,000	10,000
26 (0.40)	1.0 (1.6)	7.0 (23.3)	232.0 (144.0)	1.5	5.0	2,400	10,000

For cables with 12-pair or less, the maximum average attenuation may be increased by 10% over the values shown.

	Minimum Near End Crosstalk (NEXT) @ 772 kHz
PSWUNEXT Mean (dB)	47
PSWUNEXT Worst Pair (dB)	42

	Minimum Far End Crosstalk (FEXT) @ 772 kHz			
Conductor Size (AWG)	19	22	24	26
PSELFEXT Mean (dB/kft)	51	49	49	47
PSELFEXT Worst Pair (dB/kft)	45	43	43	43

SUPERIOR ESSEX
800.551.8948
SuperiorEssex.com

*All information, content, data, specifications, packaging and part numbers detailed herein are subject to change. For the most up-to-date information, please visit SuperiorEssex.com. Purchase of this product is subject exclusively to the then current **Superior Essex International LP Terms and Conditions of Sale for Communications Cable, Wire and Connectivity Products**, which can be found on our website, SuperiorEssex.com, or provided to you upon request.*

PART NUMBERS AND PHYSICAL CHARACTERISTICS

Part Number	Pair Count	AWG (mm)	Nominal Diameter in (mm)	Approx. Weight lbs/kft (kg/km)	Standard Length ft (m)	Approx. Shipping Weight lbs (kg)	Reel Size F x T x D in
09-026-02	6	19 (0.90)	0.49 (12)	120 (180)	5,000 (1,524)	710 (320)	44 x 18 x 20
09-028-02	12	19 (0.90)	0.59 (15)	190 (285)	5,000 (1,524)	1,115 (505)	46 x 25 x 20
09-031-02	25	19 (0.90)	0.78 (20)	355 (530)	5,000 (1,524)	1,980 (895)	52 x 25 x 20
09-034-02	50	19 (0.90)	1.03 (26)	655 (975)	5,000 (1,524)	3,565 (1,615)	62 x 30 x 24
09-038-02	100	19 (0.90)	1.37 (35)	1,225 (1,825)	2,500 (762)	3,430 (1,555)	65 x 30 x 32
09-057-02	6	22 (0.64)	0.39 (9.9)	70 (105)	5,000 (1,524)	415 (190)	36 x 18 x 14
09-059-02	12	22 (0.64)	0.47 (12)	115 (170)	5,000 (1,524)	685 (310)	44 x 18 x 20
09-062-02	25	22 (0.64)	0.60 (15)	200 (300)	5,000 (1,524)	1,165 (530)	46 x 25 x 20
09-065-02	50	22 (0.64)	0.77 (20)	350 (520)	5,000 (1,524)	1,955 (885)	52 x 25 x 20
09-069-02	100	22 (0.64)	1.02 (26)	650 (965)	5,000 (1,524)	3,540 (1,605)	62 x 30 x 24
09-073-02	200	22 (0.64)	1.38 (35)	1,225 (1,825)	2,500 (762)	3,350 (1,520)	62 x 30 x 24
09-075-02	300	22 (0.64)	1.65 (42)	1,800 (2,680)	1,250 (381)	2,495 (1,130)	58 x 25 x 20
09-077-02	400	22 (0.64)	1.88 (48)	2,365 (3,520)	1,250 (381)	3,245 (1,470)	62 x 30 x 24
09-081-02	600	22 (0.64)	2.28 (58)	3,505 (5,215)	1,250 (381)	4,995 (2,265)	72 x 35 x 36
09-083-02	900	22 (0.64)	2.76 (70)	5,195 (7,730)	1,250 (381)	7,290 (3,305)	84 x 40 x 42
09-085-02	1,200	22 (0.64)	3.14 (80)	6,845 (10,185)	1,250 (381)	9,730 (4,415)	96 x 40 x 48
09-092-02	6	24 (0.51)	0.36 (9.1)	55 (80)	5,000 (1,524)	320 (145)	36 x 18 x 14
09-094-02	12	24 (0.51)	0.42 (11)	85 (125)	5,000 (1,524)	490 (220)	36 x 18 x 14
09-097-02	25	24 (0.51)	0.52 (13)	140 (210)	5,000 (1,524)	810 (365)	44 x 18 x 20
09-100-02	50	24 (0.51)	0.66 (17)	240 (355)	5,000 (1,524)	1,365 (620)	46 x 25 x 20
09-104-02	100	24 (0.51)	0.85 (22)	430 (640)	5,000 (1,524)	2,395 (1,085)	58 x 25 x 20
09-108-02	200	24 (0.51)	1.14 (29)	810 (1,205)	5,000 (1,524)	4,665 (2,115)	72 x 35 x 36
09-110-02	300	24 (0.51)	1.37 (35)	1,180 (1,755)	2,500 (762)	3,320 (1,505)	65 x 30 x 32
09-112-02	400	24 (0.51)	1.55 (39)	1,545 (2,300)	2,500 (762)	4,475 (2,030)	72 x 35 x 36
09-116-02	600	24 (0.51)	1.88 (48)	2,285 (3,400)	1,250 (381)	3,145 (1,425)	62 x 30 x 24
09-118-02	900	24 (0.51)	2.25 (57)	3,350 (4,985)	1,300 (396)	4,800 (2,180)	72 x 35 x 36
09-120-02	1,200	24 (0.51)	2.57 (65)	4,420 (6,580)	1,250 (381)	6,225 (2,825)	78 x 40 x 39
09-121-02	1,500	24 (0.51)	2.86 (73)	5,490 (8,170)	1,000 (305)	6,190 (2,805)	84 x 40 x 42
09-124-02	1,800	24 (0.51)	3.12 (79)	6,560 (9,765)	1,000 (305)	7,355 (3,335)	84 x 40 x 42
09-125-02	2,100	24 (0.51)	3.40 (86)	7,690 (11,445)	1,000 (305)	8,865 (4,020)	96 x 40 x 48
09-126-02	2,400	24 (0.51)	3.59 (91)	8,695 (12,940)	1,000 (305)	9,870 (4,475)	96 x 40 x 48
09-153-02	900	26 (0.40)	1.78 (45)	2,120 (3,155)	1,250 (381)	3,020 (1,370)	65 x 30 x 32
09-155-02	1,200	26 (0.40)	2.03 (52)	2,785 (4,145)	1,250 (381)	4,095 (1,860)	72 x 35 x 36
09-157-02	1,800	26 (0.40)	2.48 (63)	4,150 (6,175)	1,250 (381)	5,885 (2,670)	78 x 40 x 39
09-159-02	2,400	26 (0.40)	2.86 (73)	5,515 (8,210)	1,250 (381)	8,070 (3,660)	96 x 40 x 48

FOR EXTREME RISK ENVIRONMENTS

For extreme direct burial or lashed aerial installations, this cable is available with the +M feature. See the "Mechanical Protection (+M) for Extreme Risk Environments" in the "Technical Info" section for more information.

*All information, content, data, specifications, packaging and part numbers detailed herein are subject to change. For the most up-to-date information, please visit SuperiorEssex.com. Purchase of this product is subject exclusively to the then current **Superior Essex International LP Terms and Conditions of Sale for Communications Cable, Wire and Connectivity Products**, which can be found on our website, SuperiorEssex.com, or provided to you upon request.*

ALTOS® All-Dielectric Gel-Free Cables, 6-432 Fibers

CORNING

Features and Benefits

Fully waterblocked loose tube, gel-free design
Simple access and no clean up

Polyethylene jacket
Rugged, durable and easy to strip (while providing superior protection against UV radiation, fungus, abrasion and other environmental factors)

All-dielectric cable construction
Requires no grounding or bonding

Available in 62.5 µm, 50 µm, single-mode (including bend-insensitive and non-zero dispersion-shifted (NZ-DSF) fiber options) and hybrid versions
Ready for any application including Gigabit Ethernet and 10 Gigabit Ethernet

Corning ALTOS® all-dielectric gel-free cables are designed for outdoor and limited indoor use for backbones in lashed aerial and duct installations. The loose tube gel-free design is fully waterblocked using craft-friendly, water-swellable materials, which means cable access is simple and no clean up is required. The flexible craft-friendly buffer tubes are easy to route in closures, and the SZ-stranded, loose tube design isolates fibers from installation and environmental rigors while allowing easy mid-span access. The all-dielectric cable construction requires no bonding or grounding, and these cables have a polyethylene jacket that is rugged, durable and easy to strip.

Standards

Common Installations	Outdoor lashed aerial and duct; indoor when installed according to National Electrical Code® (NEC®) Article 770
Design and Test Criteria	ANSI/ICEA S-87-640, Telcordia GR-20, RDUP PE-90

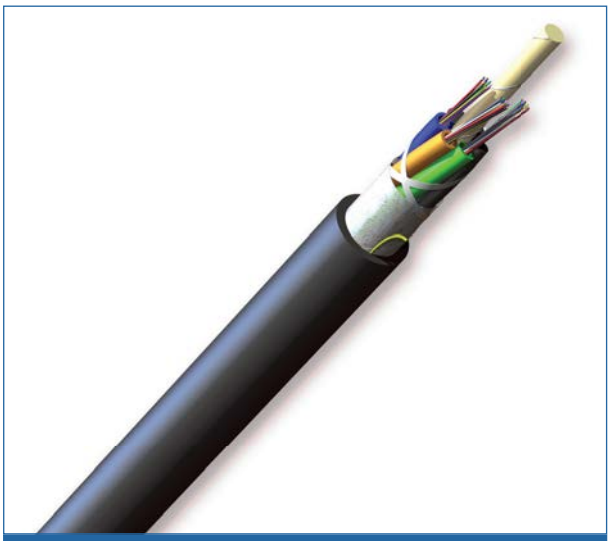

ALTOS All-Dielectric, Gel-Free Cables, 36 Fibers | Photo PIM2426

CORNING

ALTOS® All-Dielectric Gel-Free Cables, 6-432 Fibers

CORNING

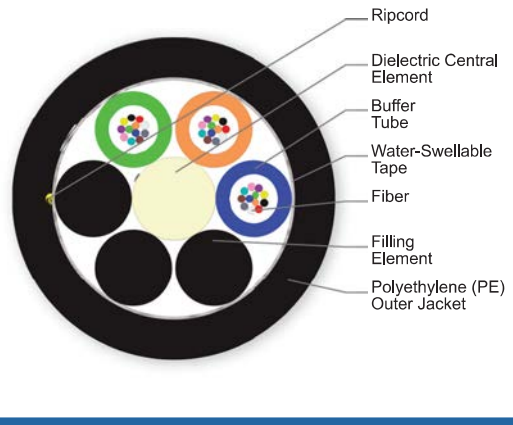

ALTOS All-Dielectric, Gel-Free Cables, 36 Fibers | Photo PIM2326

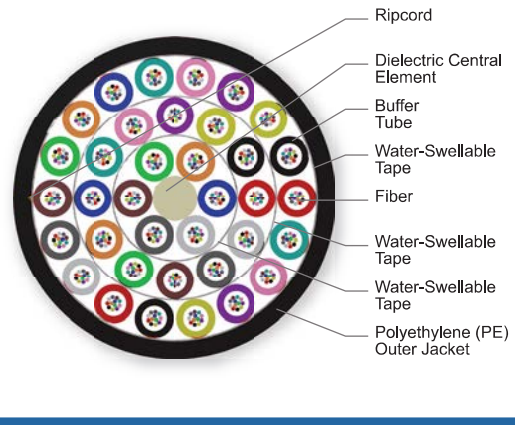

ALTOS All-Dielectric, Gel-Free Cables, 432 Fibers

Specifications

Temperature Range	
Storage	-40 °C to 70 °C (-40 °F to 158 °F)
Installation	-30 °C to 70 °C (-22 °F to 158 °F)
Operation	-40 °C to 70 °C (-40 °F to 158 °F)

** Note: Corning recommends storing cable in a proper temperature environment prior to installation to allow the cable temperature to meet installation temperature range specifications for best installation results.*

Mechanical Characteristics Cable	
Max. Tensile Strength, Short-Term	2700 N (600 lbf)
Max. Tensile Strength, Long-Term	890 N (200 lbf)

Fiber Count	Number of Tube Positions	Number of Active Tubes	Weight	Nominal Outer Diameter	Min. Bend Radius Installation	Min. Bend Radius Operation
6 - 72	6	1 - 6	73 kg/km (49 lb/1000 ft)	10.5 mm (0.41 in)	158 mm (6.2 in)	105 mm (4.1 in)
84 - 96	8	7 - 8	98 kg/km (66 lb/1000 ft)	12.2 mm (0.48 in)	183 mm (7.2 in)	122 mm (4.8 in)
108 - 144	12	9 - 12	162 kg/km (109 lb/1000 ft)	15.8 mm (0.62 in)	237 mm (9.3 in)	158 mm (6.2 in)
156 - 216	18	13 - 18	147 kg/km (99 lb/1000 ft)	16 mm (0.63 in)	240 mm (9.4 in)	160 mm (6.3 in)

ALTOS® All-Dielectric Gel-Free Cables, 6-432 Fibers

CORNING

Fiber Count	Number of Tube Positions	Number of Active Tubes	Weight	Nominal Outer Diameter	Min. Bend Radius Instal-lation	Min. Bend Radius Ope-ration
228 - 288	24	19 - 24	196 kg/km (131 lb/1000 ft)	18.2 mm (0.72 in)	273 mm (10.7 in)	182 mm (7.2 in)
360 - 432	36	30 - 36	241 kg/km (162 lb/1000 ft)	21.2 mm (0.83 in)	318 mm (12.5 in)	212 mm (8.3 in)

Chemical Characteristics	
RoHS	Free of hazardous substances according to RoHS 2011/65/EU

Transmission Performance

Multimode				
Fiber Core Diameter (µm)	62.5	50	50	50
Fiber Category	OM1	OM2	OM3	OM4
Fiber Code	K	T	T	T
Performance Option Code	30	31	80	90
Wavelengths (nm)	850/1300	850/1300	850/1300	850/1300
Maximum Attenuation (dB/km)	3.4/1.0	3.0/1.0	3.0/1.0	3.0/1.0
Serial 1 Gigabit Ethernet (m)	300/550	750/500	1000/600	1100/600
Serial 10 Gigabit Ethernet (m)	33/-	150/-	300/-	550/-
Min. Overfilled Launch (OFL) Bandwidth (MHz*km)	200/500	700/500	1500/500	3500/500
Minimum Effective Modal Bandwidth (EMB) (MHz*km)	220/-	950/-	2000/-	4700/-

ALTOS® All-Dielectric Gel-Free Cables, 6-432 Fibers

CORNING

Single-mode					
Fiber Name	SMF-28e+® LL	SMF-28® Ultra fiber**	Single-mode (OS2)	Single-mode (OS2)	LEAF® fiber
Fiber Category	G.652.D	G.652.D/G.657.A1	G.652.D	G.652.D	G.655
Fiber Code	L	Z	E	E	F
Performance Option Code	22	22	00	01	01
Wavelengths (nm)	1310/1383/1550	1310/1383/1550	1310/1383/1550	1310/1383/1550	1310/1383/1550
Maximum Attenuation (dB/km)	0.34/0.34/0.22	0.34/0.34/0.22	0.35/0.35/0.25	0.4/0.4/0.3	-/-/0.25
Typical Attenuation* (dB/km)	0.32/0.32/0.18	0.32/0.32/0.18	-	-	-/-/0.19
Fiber Name	SMF-28® ULL				
Fiber Category	G.652				
Fiber Code	P				
Performance Option Code	19				
Wavelengths (nm)	1310/1383/1550				
Maximum Attenuation (dB/km)	0.33/-/0.19				
Typical Attenuation* (dB/km)	0.31/-/0.17				

** For more information on typical attenuation please see the Corning whitepaper at http://csmedia.corning.com/opcomm//Resource_Documents/whitepapers_rl/LAN-1863-AEN.pdf*

** * SMF-28® Ultra fiber delivers up to 10x better macrobend loss performance compared to the G.652.D standard and up to 33 percent better macrobend loss performance than the G.657.A1 standard for 10mm radii bends.*

ALTOS® All-Dielectric Gel-Free Cables, 6-432 Fibers

CORNING

Ordering Information | *Note: Contact Customer Care at 1-800-743-2675 for other options.*

☐	☐	☐	☐	U	4	-	☐	☐	1	☐	☐	D	2	0
1			2	3	4		5	6	7	8		9	10	

1 Select fiber count.
006-288
360-432 (SMF-28® Ultra fiber only)

2 Select fiber code.
K = 62.5 µm multimode (OM1)
T = 50 µm multimode (OM2/OM3/OM4)
E = Single-mode (G.652.D)
L = Single-mode (G.652.D) SMF-28e+® LL
Z = Single-mode (G.652.D/ G.657.A1) SMF-28® Ultra fiber
P = Single-mode (G.652) SMF-28® ULL
F = Single-mode (G.655) LEAF®

3 Defines cable type.
U = ALTOS® Loose Tube Cable with 2.5 mm buffer tubes

4 Defines outer jacket.
4 = All-dielectric

5 Select fiber placement.
T = 12 fibers/buffer tube (standard)
6 = 6 fibers/buffer tube
See Note 1.

6 Select length markings.
3 = Markings in meters
4 = Markings in feet (standard)

7 Defines tensile strength.
1 = 2700 N/600 lbf (standard)

8 Select performance option code.
30 = 62.5 µm multimode (OM1)
31 = 50 µm multimode (OM2)
80 = 50 µm multimode (OM3)
90 = 50 µm multimode (OM4)
01 = Single-mode (OS2) (Max. attenuation 0.4/0.4/0.3 dB/km)
00 = Single-mode (OS2) (Max. attenuation 0.35/0.35/0.25 dB/km)
22 = Single-mode (OS2) (Max. attenuation 0.34/0.34/0.22 dB/km)
19 = Single-mode (Ultra Low-Loss) (Max. attenuation 0.33/–/0.19 dB/km)
01 = Single-mode NZDSF* (Max. attenuation –/–/0.25 dB/km)
**Non-Zero Disperson-Shifted Single-mode Fiber*

9 Defines cable type.
D = Gel-free cable

10 Defines special requirements.
20 = No special requirements

1) Cable outer diameter may change. Example: 48 F cable with 6 fibers per tube will require 8 active buffer and have an OD like a standard 96 F cable.

RoHS COMPLIANT

Corning Optical Communications LLC • PO Box 489 • Hickory, NC 28603-0489 USA
800-743-2675 • FAX: 828-325-5060 • International: +1-828-901-5000 • www.corning.com/opcomm
A complete listing of the trademarks of Corning Optical Communications is available at www.corning.com/opcomm/trademarks. All other trademarks are the properties of their respective owners. Corning Optical Communications is ISO 9001 certified.
© 2017 Corning Optical Communications. All rights reserved.

CORNING

BICSI Pattern Telecommunications Ground Bar Kits

Listed 2S01

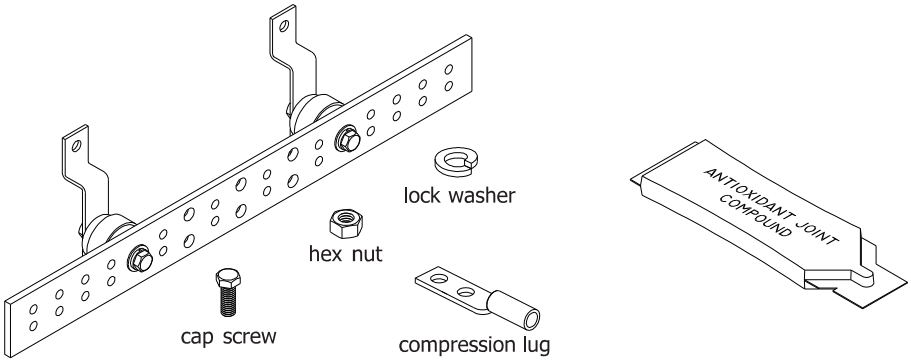

Part No.	Bar Size	Material	No. of 5/16" Hole Sets	No. of 7/16" Hole Sets	Approx. Wt. (lbs.)
GBI1426TGBKT	1/4" x 2" x 6"	Copper	2	2	3
TGBI1426TGBKT	1/4" x 2" x 6"	Electro Tin Plated	2	2	3
GBI14210TGBKT	1/4" x 2" x 10"	Copper	4	3	4-1/2
TGBI14210TGBKT	1/4" x 2" x 10"	Electro Tin Plated	4	3	4-1/2
GBI14212TGBKT	1/4" x 2" x 12"	Copper	6	3	5
TGBI14212TGBKT	1/4" x 2" x 12"	Electro Tin Plated	6	3	5
GBI14216TGBKT	1/4" x 2" x 16"	Copper	8	3	6
TGBI14216TGBKT	1/4" x 2" x 16"	Electro Tin Plated	8	3	6
GBI14220TGBKT	1/4" x 2" x 20"	Copper	12	3	6-1/2
TGBI14220TGBKT	1/4" x 2" x 20"	Electro Tin Plated	12	3	6-1/2
GBI14224TGBKT	1/4" x 2" x 24"	Copper	14	5	7
TGBI14224TGBKT	1/4" x 2" x 24"	Electro Tin Plated	14	5	7

Description:

- 1/4″ thick x 2″ wide electrolytic tough pitch 110 alloy copper bar.
- 5/16″ holes, 5/8″ on center which accommodates "A" spaced 2 hole compression lugs.
- 7/16″ holes, 1″ on center which accommodates "C" spaced 2 hole compression lugs.
- Comes with 1-1/2″ insulators and 1″ offset stainless steel mounting brackets.
- Other sizes available. Contact factory for details.
- Includes one 1/2 oz. tube of antioxidant (#HCAJC1/2).
- Meets "BICSI" and EIA/TIA 607 standards.

Kits Include:

(1) Ground bar with brackets and insulators
(6) GECLB62A: #6 compression lug
(3) GECLB22C: #2 compression lug
(1) GECLB2/02C: 2/0 compression lug
(12) CS46S: 1/4"-20 x 3/4" SS hex head cap screw
(12) LW4S: 1/4"-20 SS lock washer
(12) N420S: 1/4"-20 SS hex nut
(6) CS68S: 3/8"-16 x 1" SS hex head cap screw
(6) LW6S: 3/8"-16 SS lock washer
(6) N616S: 3/8"-16 SS hex nut

301 Ziegler Drive, Grayslake, IL 60030
847-548-8700 • 800-842-7437 • Fax: 847-548-8755
Web-site: www.harger.com • E-mail: hargersales@harger.com

BICSI Pattern Telecommunications Main Ground Bar Kits

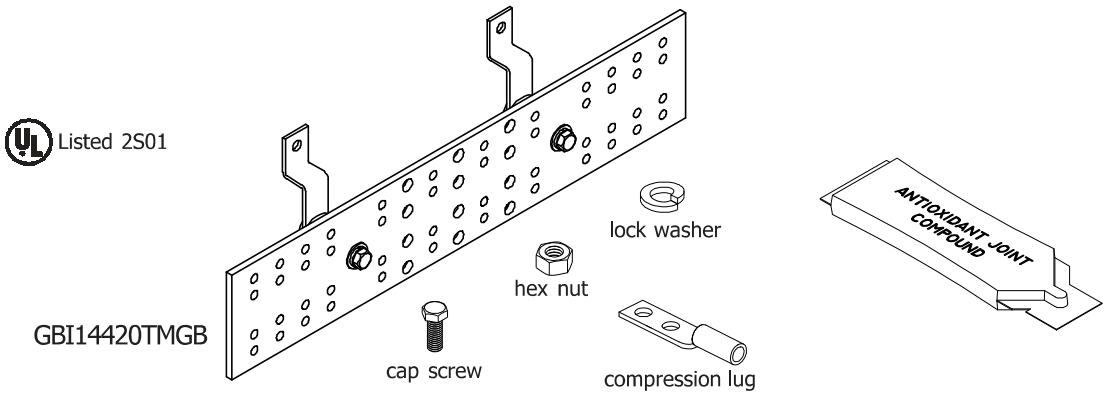

Part No.	Bar Size	Material	No. of 5/16" Hole Sets	No. of 7/16" Hole Sets	Approx. Wt. (lbs.)
GBI14412TMGBKT	1/4" x 4" x 12"	Copper	12	6	8
TGBI14412TMGBKT	1/4" x 4" x 12"	Electro Tin Plated	12	6	8
GBI14416TMGBKT	1/4" x 4" x 16"	Copper	16	6	9-1/2
TGBI14416TMGBKT	1/4" x 4" x 16"	Electro Tin Plated	16	6	9-1/2
GBI14420TMGBKT	1/4" x 4" x 20"	Copper	24	6	11
TGBI14420TMGBKT	1/4" x 4" x 20"	Electro Tin Plated	24	6	11
GBI14424TMGBKT	1/4" x 4" x 24"	Copper	28	10	12
TGBI14424TMGBKT	1/4" x 4" x 24"	Electro Tin Plate	28	10	12

Description:

- 1/4" thick x 4" wide electrolytic tough pitch 110 alloy copper bar.
- 5/16" holes, 5/8" on center which accommodates "A" spaced 2 hole compression lugs.
- 7/16" holes, 1" on center which accommodates "C" spaced 2 hole compression lugs.
- Comes with 1-1/2" insulators and 1" offset stainless steel mounting brackets.
- Other sizes available. Contact factory for details.
- Includes one 1/2 oz. tube of antioxidant (#HCAJC1/2).
- Meets "BICSI" and EIA/TIA 607 standards.

Kits Include:

(1) Ground bar with brackets and insulators
(6) GECLB62A: #6 compression lug
(3) GECLB22C: #2 compression lug
(1) GECLB2/02C: 2/0 compression lug
(1) GECLB4/02C: 4/0 compression lug
(12) CS46S: 1/4"-20 x 3/4" SS hex head cap screw
(12) LW4S: 1/4"-20 SS lock washer
(12) N420S: 1/4"-20 SS hex nut
(6) CS68S: 3/8"-16 x 1" SS hex head cap screw
(6) LW6S: 3/8"-16 SS lock washer
(6) N616S: 3/8"-16 SS hex nut

301 Ziegler Drive, Grayslake, IL 60030
847-548-8700 • 800-842-7437 • Fax: 847-548-8755
Web-site: www.harger.com • E-mail: hargersales@harger.com

Rev. 12/10/04

LADDER RACK SYSTEM

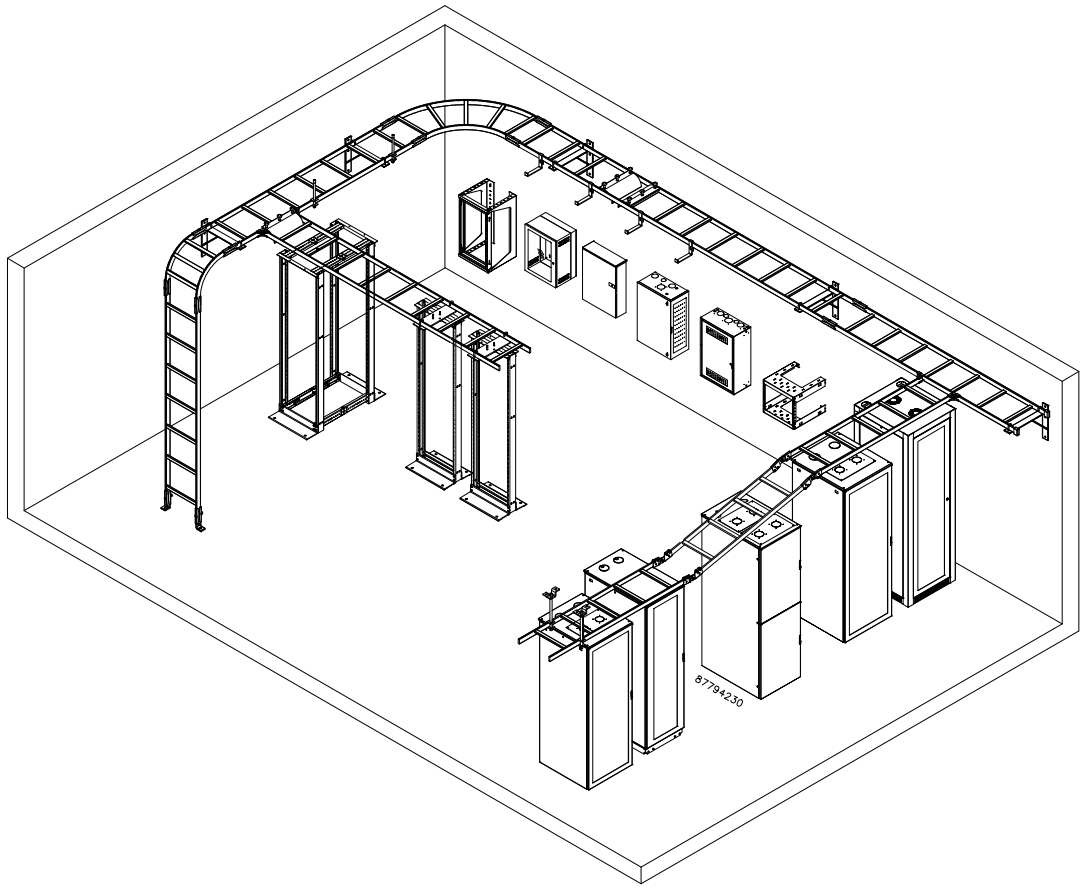

INDUSTRY STANDARDS

Painted and Plated Straight Sections:

UL/cULus Classified for Equipment Grounding and Load; File No. E236414

Curved Sections and Splice Kits:

UL/cULus Classified for Equipment Grounding; File No. E236414

cULus Bonding & Grounding

- Classified as suitable for an equipment ground conductor
  - CSA C22.2 No. 126.1-02 Section 5.2.8 Load Destruction Test
- Two grounding jumper kits required per each splice kit on painted ladder rack sections

cULus Load Testing

- Load capacity per 10 support lengths is 369.2 lb.; safety factor of 1.5X
  - CSA C22.2 No. 126.1-02 Section 5.1 Electrical Continuity Test

APPLICATION

The Ladder Rack System conveniently routes cables via a modular pathway through unused space on the floor, wall or ceiling while keeping cables accessible for easy maintenance. A variety of straight and curved sections are highly adaptable and can accommodate virtually any room layout.

FEATURES

- Section cross members welded on 9-in. (229-mm) centers
- Accessory adjustable cross members
- Butt-splice kits and junction-splice kits
- Each model is boxed or bagged

SPECIFICATIONS

- Straight and curved sections made of 1-1/2-in. steel
- Sections available in 6-, 12-, 18- and 24-in. (152-, 305-, 457- and 610-mm) widths
- Steel connecting and mounting hardware

FINISH

Available in three finishes:

- ANSI 61 gray polyester powder paint
- RAL 9005 black polyester powder paint
- Plated

ACCESSORIES

Touch-up Paint

LADDER RACK STRAIGHT SECTIONS (CULUS CLASSIFIED)

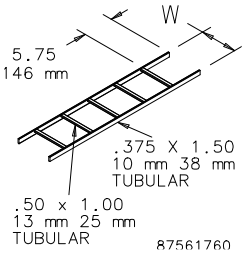

Supports cable on straight runs. Made of 1-1/2 in. x 3/8 in. (38 mm x 8 mm) 16 gauge tubular steel with a painted or plated finish. Nominal installed length is 10 ft. (3.05 m). Each section is 9 ft. 11-1/2 in. (3.03 m) long with cross members welded at 9-in. (229-mm) intervals.

BULLETIN: DCR

Catalog Number	Finish	W (in.)	W (mm)
LSS6G	Gray	6.00	152
LSS6BLK	Black	6.00	152
LSS6GZ	Plated	6.00	152
LSS12G	Gray	12.00	305
LSS12BLK	Black	12.00	305
LSS12GZ	Plated	12.00	305
LSS18G	Gray	18.00	457
LSS18BLK	Black	18.00	457
LSS18GZ	Plated	18.00	457
LSS24BLK	Black	24.00	610

LADDER RACK CURVED SECTIONS (CULUS CLASSIFIED)

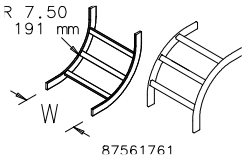

Provide a vertical change in direction. They are made of 1-1/2 in. x 3/8 in. (38 mm x 8 mm) tubular steel with a painted or plated finish. Cross members are welded on the inside (inside bends) or outside (outside bends) of the section. Connect to straight section with butt-splice kits. Designed for category 5e, 6, 6A and fiber optic cable.

BULLETIN: DCR

Catalog Number	Finish	Vertical Bend Type	W (in.)	W (mm)
LIB6G	Gray	Inside	6.00	152
LIB6BLK	Black	Inside	6.00	152
LIB6GZ	Plated	Inside	6.00	152
LIB12G	Gray	Inside	12.00	305
LIB12BLK	Black	Inside	12.00	305
LIB12GZ	Plated	Inside	12.00	305
LIB18G	Gray	Inside	18.00	457
LIB18BLK	Black	Inside	18.00	457
LIB18GZ	Plated	Inside	18.00	457
LIB24BLK	Black	Inside	24.00	610
LOB6G	Gray	Outside	6.00	152
LOB6BLK	Black	Outside	6.00	152
LOB6GZ	Plated	Outside	6.00	152
LOB12G	Gray	Outside	12.00	305
LOB12BLK	Black	Outside	12.00	305
LOB12GZ	Plated	Outside	12.00	305
LOB18G	Gray	Outside	18.00	457
LOB18BLK	Black	Outside	18.00	457
LOB18GZ	Plated	Outside	18.00	457
LOB24BLK	Black	Outside	24.00	610

90-DEGREE HORIZONTAL E-BEND SECTION (CULUS CLASSIFIED)

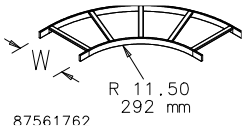

Provide a 90-degree horizontal change in cable runway direction. Made of 1-1/2 in. x 3/8 in. (38 mm x 8 mm) tubular steel with a painted or plated finish. Connect to straight sections with butt-splice kits. Designed for category 5e, 6, 6A and fiber optic cable.

BULLETIN: DCR

Catalog Number	Finish	W (in.)	W (mm)
L90HB12G	Gray	12.00	305
L90HB12BLK	Black	12.00	305
L90HB12GZ	Plated	12.00	305
L90HB18G	Gray	18.00	457
L90HB18BLK	Black	18.00	457
L90HB18GZ	Plated	18.00	457
L90HB24BLK	Black	24.00	610

BUTT-SPLICE KIT (CULUS CLASSIFIED)

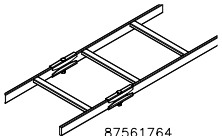

Joins straight ladder rack sections, inside and outside bends, and 90-degree horizontal e-bends. Each kit connects one section to another. Includes mounting hardware.

BULLETIN: DCR

Catalog Number	Finish	Kit Qty.
LBSKG	Gray	2
LBSKB	Black	2
LBSK	Plated	2

ADJUSTABLE BUTT-SPLICE KIT (CULUS CLASSIFIED)

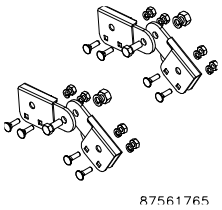

Provides a change in up-and-down direction of the cable runway. It can be adjusted to any angle from 0 to 90 degrees. Made of steel with a painted or plated finish. Each kit connects one ladder rack section to another. Includes mounting hardware.

BULLETIN: DCR

Catalog Number	Finish	Kit Qty.
LABSKG	Gray	2
LABSKB	Black	2
LABSK	Plated	2

JUNCTION SPLICE KIT (CULUS CLASSIFIED)

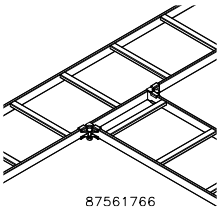

Connects two straight ladder rack sections at a 90-degree angle. Made of steel with a painted or plated finish. Each kit connects one section to another. Includes mounting hardware.

BULLETIN: DCR

Catalog Number	Finish	Kit Qty.
LJSKG	Gray	2
LJSKB	Black	2
LJSK	Plated	2

ADJUSTABLE JUNCTION SPLICE KIT (CULUS CLASSIFIED)

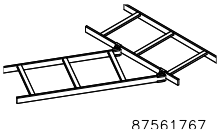

Connects two ladder rack sections at any junction angle. Made of steel with a painted or plated finish. Each kit connects one section to another. Includes mounting hardware.

BULLETIN: DCR

Catalog Number	Finish	Kit Qty.
LAJSKG	Gray	2
LAJSKB	Black	2
LAJSK	Plated	2

RETAINING POST KIT

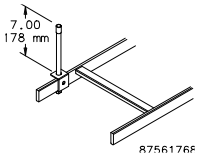

Provides extra ladder rack capacity. Mounts onto rack side stringer. Post is unthreaded 1/2-in. tube. Kit components are plated steel. Includes post cap and mounting hardware.

BULLETIN: DCR

Catalog Number	Finish	Kit Qty.
LRP	Plated	1
LRPB	Black	1

L-BRACKET KIT

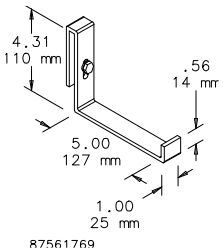

The L-Bracket Kit supports power or other cables that need to be separated from the main cable run. Made of steel with a painted or plated finish. Mounts onto ladder rack stringer. Includes mounting hardware.

BULLETIN: DCR

Catalog Number	Finish	Kit Qty.
LLBG	Gray	1
LLBB	Black	1
LLB	Plated	1

RADIUS DROP KIT

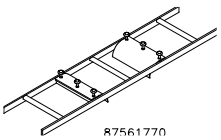

Mounts over ladder rack cross member to provide bending radius when dropping cable. Includes cable spools to separate cable and all mounting hardware. Made of extruded aluminum.

BULLETIN: DCR

Catalog Number	Finish	Cable Runway Width (in.)	Cable Runway Width(mm)	Kit Qty.
LRD6G	Gray	6.00	152	1
LRD6BLK	Black	6.00	152	1
LRD6GZ	Aluminum	6.00	152	1
LRD12G	Gray	12.00	305	1
LRD12BLK	Black	12.00	305	1
LRD12GZ	Aluminum	12.00	305	1
LRD18G	Gray	18.00	457	1
LRD18BLK	Black	18.00	457	1
LRD18GZ	Aluminum	18.00	457	1
LRD24BLK	Black	24.00	610	1

STRINGER RADIUS DROP KIT

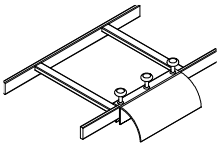

Mounts over ladder rack stringer to provide bending radius when dropping cable. Includes cable spools to separate cable and all mounting hardware. Made of extruded aluminum.

BULLETIN: DCR

Catalog Number	Finish	Kit Qty.
LSRDG	Gray	1
LSRDBLK	Black	1
LSRDGZ	Aluminum	1

CEILING SUPPORT KIT

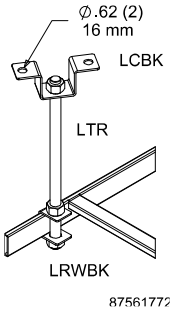

Supports ladder rack from ceiling. Components available separately or as a kit. Six-foot-long, 5/8-in. diameter rod is threaded for easy tension adjustment. Made of plated steel. Requires surface mounting hardware (not included).

BULLETIN: DCR

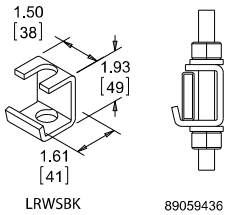

Catalog Number	Finish	Description	Kit Qty.
LCK	Plated	Kit includes one each: - LTR Threaded Rod - 5/8-in. nuts (4) - LRWBK Rack Runway Bracket - LCBK Ceiling Bracket	1
LTR	Plated	5/8-in. x 6-ft. Threaded Rod	1
LRWBK	Plated	Rack Runway Brackets (10) 5/8-in. nuts (20)	1
LRWBKB	Black	Rack Runway Brackets (10) 5/8-in. nuts (20)	1
LCBK	Plated	Ceiling Brackets (10) 5/8-in nuts (20)	1
LCBKB	Black	Ceiling Brackets (10) 5/8-in nuts (20)	1
LRWSBK	Plated	Rack-to-Runway Brackets (10) Slip-On 5/8 in. nuts (2)	1
LRWSBKB	Black	Rack-to-Runway Brackets (10) Slip-On 5/8 in. nuts (2)	1

FOOT KIT

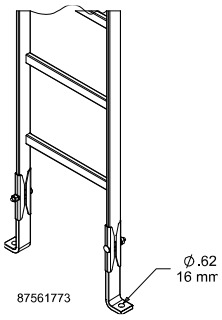

Secures ladder rack to floor, ceiling or wall. Made of steel with a painted or plated finish. One kit secures one ladder rack section. Requires surface mounting hardware (not included).

BULLETIN: DCR

Catalog Number	Finish	Kit Qty.
LFKG	Gray	2
LFKB	Black	2
LFK	Plated	2

RACK-TO-RUNWAY MOUNTING PLATE KIT

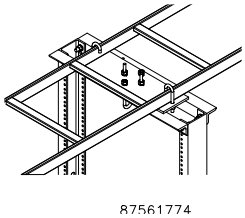

Secures ladder rack to the top of equipment racks. Made of steel with a painted or plated finish. The plate is designed for mounting either parallel or perpendicular to the rack. Includes mounting hardware.

BULLETIN: DCR

Catalog Number	Fits Ladder Width	Finish	Kit Qty.
LRRMPG	6, 12	Gray	1
LRRMPBLK	6, 12	Black	1
LRRMPGZ	6, 12	Plated	1
LRRMPG18	12, 18	Gray	1
LRRMPBLK18	12, 18	Black	1
LRRMPGZ18	12, 18	Plated	1
LRRMPBLK24	18, 24	Black	1

VERTICAL WALL BRACKET

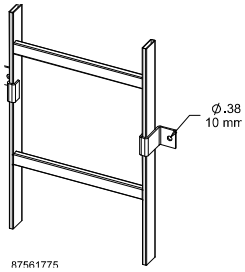

Secures ladder rack section to wall or other flat surface. Made of steel with a painted or plated finish. Requires surface mounting hardware (not included).

BULLETIN: DCR

Catalog Number	Finish	Kit Qty.
LVWBG	Gray	2
LVWBB	Black	2
LVWB	Plated	2

TRIANGLE SUPPORT BRACKET KIT

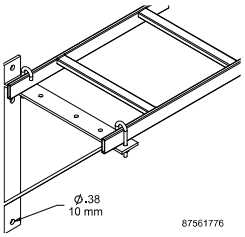

Supports ladder rack from wall. Bracket is made of steel with painted or plated finish. Brackets have predrilled mounting holes for two sizes of ladder rack. Includes one J-Bolt Kit.

BULLETIN: DCR

Catalog Number	A in.	A mm	Finish	Fits Cable Runway	Kit Qty.
LTSB12G	0.00		Gray	6, 12	1
LTSB12BLK	0.00		Black	6, 12	1
LTSB12GZ	0.00		Plated	6, 12	1
LTSB18G	0.00		Gray	12, 18	1
LTSB18BLK	0.00		Black	12, 18	1
LTSB18GZ	0.00		Plated	12, 18	1
LTSB24BLK	24.00	610	Black	12, 18, 24	1

MODULAR TRIANGLE SUPPORT BRACKET KIT

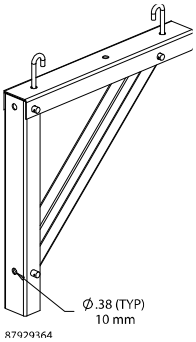

Secures and supports ladder rack to wall. Design features three bracket support arms that easily attach to each other with quick-release pins and fold down to ease assembly. Each model accomodates two ladder rack widths. Kit includes one modular bracket assembly, three quick-release pins and two J-bolts with washers and nuts. Bracket made of painted steel with plated hardware.

BULLETIN: DCR

Catalog Number	Finish	Fits Cable Runway	Kit Qty.
LMTSB12B	Black	6, 12	1
LMTSB18B	Black	12, 18	1
LMTSB24B	Black	18, 24	1

WALL ANGLE SUPPORT

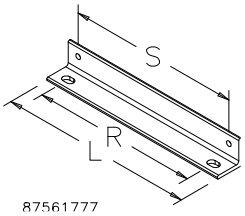

Supports ladder rack from wall or other flat surface. Made of 2-in. x 2-in. 10 gauge steel angle with painted or plated finish. Includes two J-bolts, nuts and screws.

BULLETIN: DCR

Catalog Number	Finish	L in./mm	R in./mm	S in./mm	Kit Qty.
LWASK6G	Gray	8.00 203	6.00 152	6.38 162	1
LWASK6BLK	Black	8.00 203	6.00 152	6.38 162	1
LWASK6GZ	Plated	8.00 203	6.00 152	6.38 162	1
LWASK12G	Gray	14.00 356	12.00 305	12.38 314	1
LWASK12BLK	Black	14.00 356	12.00 305	12.38 314	1
LWASK12GZ	Plated	14.00 356	12.00 305	12.38 314	1
LWASK18G	Gray	20.00 508	18.00 457	18.38 467	1
LWASK18BLK	Black	20.00 508	18.00 457	18.38 467	1
LWASK18GZ	Plated	20.00 508	18.00 457	18.38 467	1
LWASK24BLK	Black	26.00 660	24.00 610	24.38 619	1

CORNER SUPPORT BRACKET KIT

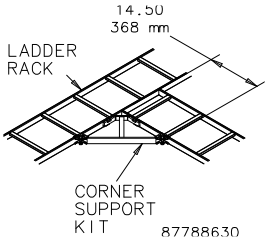

Provides additional support for 90-degree ladder rack junction. Made of steel with a painted or plated finish.

BULLETIN: DCR

Catalog Number	Finish	Kit Qty.
LCSKG	Gray	1
LCSKB	Black	1
LCSK	Plated	1

END CAP KIT

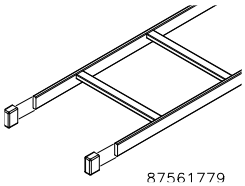

Provides protective covering for ends of ladder rack. Made of black vinyl.

BULLETIN: DCR

Catalog Number	Kit Qty.
LEC	2

RUNWAY TERMINATION KIT

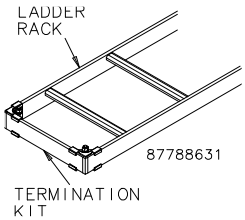

Provides a solid termination when the last section of ladder rack ends away from a wall. Made of steel with a painted or plated finish.

BULLETIN: DCR

Catalog Number	Finish	Fits Cable Runway	Kit Qty.
LRTK12G	Gray	12	1
LRTK12B	Black	12	1
LRTK12	Plated	12	1
LRTK18G	Gray	18	1
LRTK18B	Black	18	1
LRTK18	Plated	18	1
LRTK24B	Black	24	1

MOVABLE CROSS MEMBER

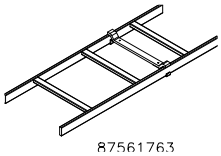

Supports cable at drop locations between welded cross members. Made of steel with a painted or plated finish. For maximum cable protection, use with radius drop kit. Includes hardware for secure mounting to ladder rack stringers.

BULLETIN: DCR

Catalog Number	Finish	W (in.)	W (mm)	Kit Qty.
LMCM12G	Gray	12.00	305	1
LMCM12BLK	Black	12.00	305	1
LMCM12GZ	Plated	12.00	305	1
LMCM18G	Gray	18.00	457	1
LMCM18BLK	Black	18.00	457	1
LMCM18GZ	Plated	18.00	457	1
LMCM24BLK	Black	24.00	610	1

RACK-TO-WALL KIT

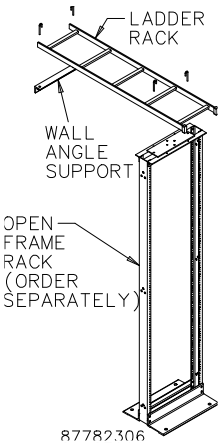

Includes one section of straight ladder rack and everything needed to fasten the ladder section to an open frame rack and to the wall. Ladder is 54-in. (1372-mm) long by 12-in. (305-mm) wide. All parts have a black painted finish. Order open frame rack separately.

BULLETIN: DOFR2

Catalog Number	Description
E45RUBKIT	Each Rack-to-Wall Kit includes one: - LSS12BLK [54-in. (1372-mm) long] Ladder Rack* - LWASK12BLK Wall Angle Support with j-bolts - LRRMPBLK Rack-to-Runway Mounting Kit - LEC End Cap Kit

* Ladder Rack is cULus Classified

RUNWAY ELEVATION KIT

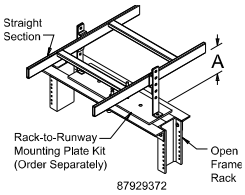

Elevates ladder rack 3 or 6 in. (76 or 152 mm) above rack-to-ladder mounting plate. Use on any width ladder rack. Kit includes two brackets and all mounting hardware. Made of heavy plated steel.

BULLETIN: DCR

Catalog Number	A (in.)	A (mm)	Finish	Kit Qty.
LEK3	3.00	76	Plated	1
LEK3B	3.00	76	Black	1
LEK6	6.00	152	Plated	1
LEK6B	6.00	152	Black	1
LEK12	12.00	305	Plated	1
LEK12B	12.00	305	Black	1

RUNWAY OVERHEAD 12-IN. STACK KIT

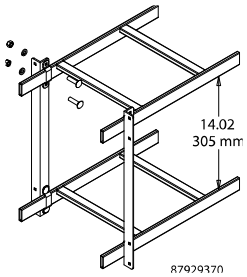

Allows stacking any width of ladder rack runways 12 in. (305 mm) above each other. Each kit contains two complete stacking brackets with all necessary hardware. Use one kit at least every 5 ft. (1.5 m). Brackets and fasteners made of plated steel.

BULLETIN: DCR

Catalog Number	Finish	Includes	Kit Qty.
LST12	Plated	2 brackets and hardware	1
LST12B	Black	2 brackets and hardware	1

RUNWAY CENTER SUPPORT KIT

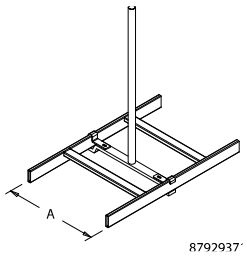

Threaded rod and bracket supports center of ladder rack from ceiling. Kit includes heavy-duty ladder rack cross member, two #12-24 screws, 5/8-in. threaded rod, protected sleeve and four 5/8-in. nuts. Use one kit at least every 5 ft. (1.5 m). Made of plated steel.

BULLETIN: DCR

Catalog Number	Finish	Fits Cable Runway	Kit Qty.
LCSK6	Plated	6	1
LCSK12	Plated	12	1
LCSK18	Plated	18	1
LCSK24	Plated	24	1

SPOOL DIVIDER KIT

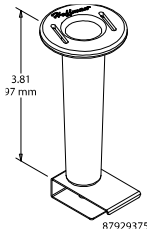

Spools separate cables to improve cable management and to control cable-to-cable distances. Spool and bracket attach to ladder rack cross member and can be located anywhere across the width. Kit includes ten 4-in.-tall spools, brackets and all necessary hardware. Spool made of black plastic and bracket made of plated steel.

BULLETIN: DCR

Catalog Number	Finish	Kit Includes
LCRDSK	Black plastic spool; plated steel bracket	10 spools, 10 brackets and mounting hardware

INSULATED GROUND JUMPER KIT

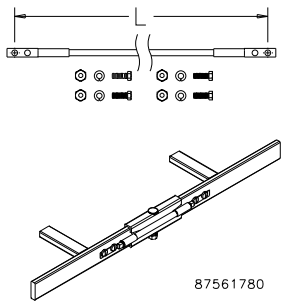

Fastens across splices to provide a secure ground between sections of ladder rack. Made of #6 AWG x 7 strand wire with green THW insulation and two-hole compression lugs mounted on each end. Includes fasteners.

BULLETIN: DBG

Catalog Number	Conductor Type	L in./mm
DGJ	#6-7 Stranded	12.00 305

cULus requires 2 kits per splice on all painted ladder sections

J-BOLT KIT

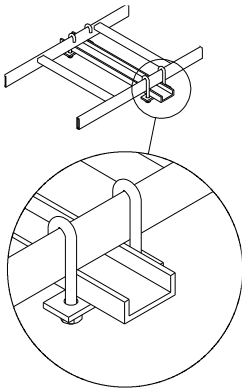

Connects ladder rack to top of cabinet or to auxiliary support channel. Each kit includes two J-bolts and makes one support connection. Kit components are plated steel. Includes mounting hardware.

Each kit contains:
(2) J-Bolts, 5/16 in.
(2) Nuts, 5/16 in.
(2) Washers, 5/16 in.
(2) Lock Washers, 5/16 in.
(1) Plate

BULLETIN: DCR

Catalog Number	J (in.)	J (mm)	Finish
LJBK	3.5	89	Plated
LJBK5	5.00	127	Plated
LJBK6	6.00	152	Plated
LJBK7	7.00	178	Plated

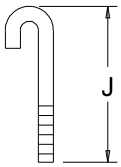

CABLERACK™

CABLERACK™ is used for ladder or basket tray mounting and securing 19-inch rack equipment for Data centers, Telecommunication rooms and other locations. The fixed, open frame rack allows suspending 19-inch rack equipment from Ladder Rack or Basket Tray. The rack has universal tapped holes per industry standards to accommodate typical applications. These open frame racks are ideal for high-density cabling applications which require above-the-cabinet mounting of equipment, and provide maximum access to cables and equipment. CABLERACK is ideal for Data Center applications, expanding equipment to above-the-cabinet while providing increased equipment and cable densities.

BULLETIN: DOFRW

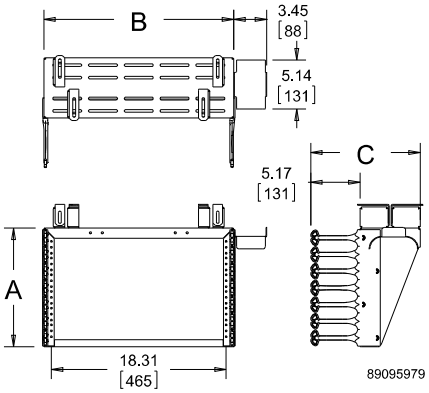

Standard Product

Catalog Number	AxBxC in./mm	Rack Units	Cable Bend Radius Accessory
E19T6U	12.44 x 20.16 x 11.50 316 x 512 x 292	6	ECMBA4

MEDIUM, TYPE 1

INDUSTRY STANDARDS

UL 50, 50E Listed; Type 1; File No. E27567
cUL Listed per CSA C22.2 No 40; Type 1; File No. E27567

NEMA/EEMAC Type 1
CSA, File 42184: Type 1
IEC 60529, IP30

APPLICATION

These enclosures have a size range of 16 x 12 x 6-in. to 36 x 30 x 12-in. and meet basic functionality requirements for applications that do not require oil- or dust-tight enclosures.

FEATURES

- Doors have butt hinges
- Collar studs provided for mounting optional panel
- Slotted flush latches; optional latches available
- Mounting holes on back of enclosure

SPECIFICATIONS

- 14 or 12 gauge steel

FINISH

ANSI 61 gray polyester powder paint finish inside and out over pretreated surfaces. Optional solid panels are white and optional perforated panels are gray.

ACCESSORIES

See also Accessories.
T-Handle Latch and Keyed Cylinder Lock Kits
Electric Heater
Electrical Interlocks
Grounding Device
Panels for Medium Type 1 Enclosures
Rack Mounting Angles - U Style (Type RA)
T-Handle Latch and Keyed Cylinder Lock Kits
Touch-Up Paint
Steel and Stainless Steel Window Kits

BULLETIN: A1M

Standard Product

Catalog Number	AxBxC in./mm	Panel	Perforated Panel	Panel Size D x E in./mm	Panel Gauge	G in./mm	H in./mm	J in./mm	Q in./mm	P in./mm	F in./mm	K in./mm
A16N12ALP	16.00 x 12.00 x 6.62 406 x 305 x 168	A16N12MP	A16N12MPP	13.00 x 10.50 330 x 267	14	13.88 353	7.00 178	2.50 64	1.06 27	0.31 8	6.00 152	1.50 38
A16N16ALP	16.00 x 16.00 x 6.62 406 x 406 x 168	A16N16MP	A16N16MPP	13.00 x 14.50 330 x 368	14	13.88 353	11.00 279	2.50 64	1.06 27	0.31 8	6.00 152	1.50 38
A16N20ALP	16.00 x 20.00 x 6.62 406 x 508 x 168	A16N20MP	A16N20MPP	13.00 x 18.50 330 x 470	14	13.88 353	15.00 381	2.50 64	1.06 27	0.31 8	6.00 152	1.50 38
A20N16ALP	20.00 x 16.00 x 6.62 508 x 406 x 168	A20N16MP	A20N16MPP	17.00 x 14.50 432 x 368	14	17.88 454	11.00 279	2.50 64	1.06 27	0.31 8	6.00 152	1.50 38
A20N20ALP	20.00 x 20.00 x 6.62 508 x 508 x 168	A20N20MP	A20N20MPP	17.00 x 18.50 432 x 470	14	17.88 454	15.00 381	2.50 64	1.06 27	0.31 8	6.00 152	1.50 38
A24N16ALP	24.00 x 16.00 x 6.62 610 x 406 x 168	A24N16MP	A24N16MPP	21.00 x 14.50 533 x 368	14	21.88 556	11.00 279	2.50 64	1.06 27	0.31 8	6.00 152	1.50 38
A24N20ALP	24.00 x 20.00 x 6.62 610 x 508 x 168	A24N20MP	A24N20MPP	21.00 x 18.50 533 x 470	14	21.88 556	15.00 381	2.50 64	1.06 27	0.31 8	6.00 152	1.50 38
A24N24ALP	24.00 x 24.00 x 6.62 610 x 610 x 168	A24N24MP	A24N24MPP[a]	21.00 x 22.50 533 x 572	12	21.88 556	19.00 483	2.50 64	1.06 27	0.31 8	6.00 152	1.50 38
A30N24ALP	30.00 x 24.00 x 6.62 762 x 610 x 168	A30N24MP	A30N24MPP[a]	26.00 x 22.50 660 x 572	12	27.50 699	16.75 425	3.62 92	1.25 32	0.44 11	6.00 152	2.00 51
A36N24ALP	36.00 x 24.00 x 6.62 914 x 610 x 168	A36N24MP	A36N24MPP[a]	32.00 x 22.50 813 x 572	12	33.50 851	16.75 425	3.62 92	1.25 32	0.44 11	6.00 152	2.00 51
A36N30ALP	36.00 x 30.00 x 6.62 914 x 762 x 168	A36N30MP	A36N30MPP[a]	32.00 x 28.50 813 x 724	12	33.50 851	22.75 578	3.62 92	1.25 32	0.44 11	6.00 152	2.00 51
A16N12BLP	16.00 x 12.00 x 8.62 406 x 305 x 219	A16N12MP	A16N12MPP	13.00 x 10.50 330 x 267	14	13.88 353	7.00 178	2.50 64	1.06 27	0.31 8	8.00 203	1.50 38
A20N12BLP	20.00 x 12.00 x 8.62 508 x 305 x 219	A20N12MP	A20N12MPP	17.00 x 10.50 432 x 267	14	17.88 454	7.00 178	2.50 64	1.06 27	0.31 8	8.00 203	1.50 38
A20N16BLP	20.00 x 16.00 x 8.62 508 x 406 x 219	A20N16MP	A20N16MPP	17.00 x 14.50 432 x 368	14	17.88 454	11.00 279	2.50 64	1.06 27	0.31 8	8.00 203	1.50 38
A20N20BLP	20.00 x 20.00 x 8.62 508 x 508 x 219	A20N20MP	A20N20MPP	17.00 x 18.50 432 x 470	14	17.88 454	15.00 381	2.50 64	1.06 27	0.31 8	8.00 203	1.50 38
A24N20BLP	24.00 x 20.00 x 8.62 610 x 508 x 219	A24N20MP	A24N20MPP	21.00 x 18.50 533 x 470	14	21.88 556	15.00 381	2.50 64	1.06 27	0.31 8	8.00 203	1.50 38
A24N24BLP	24.00 x 24.00 x 8.62 610 x 610 x 219	A24N24MP	A24N24MPP[a]	21.00 x 22.50 533 x 572	12	21.88 556	19.00 483	2.50 64	1.06 27	0.31 8	8.00 203	1.50 38
A30N20BLP	30.00 x 20.00 x 8.62 762 x 508 x 219	A30N20MP	A30N20MPP[a]	26.00 x 18.50 660 x 470	12	27.50 699	15.00 381	2.50 64	1.25 32	0.44 11	8.00 203	2.00 51
A30N24BLP	30.00 x 24.00 x 8.62 762 x 610 x 219	A30N24MP	A30N24MPP[a]	26.00 x 22.50 660 x 572	12	27.50 699	16.75 425	3.62 92	1.25 32	0.44 11	8.00 203	2.00 51
A30N30BLP	30.00 x 30.00 x 8.62 762 x 762 x 219	A30N30MP	A30N30MPP[a]	26.00 x 28.50 660 x 724	12	27.50 699	22.75 578	3.62 92	1.25 32	0.44 11	8.00 203	2.00 51

Catalog Number	AxBxC in./mm	Panel	Perforated Panel	Panel Size D x E in./mm	Panel Gauge	G in./mm	H in./mm	J in./mm	Q in./mm	P in./mm	F in./mm	K in./mm
A36N24BLP	36.00 x 24.00 x 8.62 914 x 610 x 219	A36N24MP	A36N24MPP[a]	32.00 x 22.50 813 x 572	12	33.50 851	16.75 425	3.62 92	1.25 32	0.44 11	8.00 203	2.00 51
A36N30BLP	36.00 x 30.00 x 8.62 914 x 762 x 219	A36N30MP	A36N30MPP[a]	32.00 x 28.50 813 x 724	12	33.50 851	22.75 578	3.62 92	1.25 32	0.44 11	8.00 203	2.00 51
A18N18CLP	18.00 x 18.00 x 10.62 457 x 457 x 270	A18N18MP	A18N18MPP	15.00 x 16.50 381 x 419	14	15.88 403	13.00 330	2.50 64	1.06 27	0.31 8	10.00 254	1.50 38
A24N20CLP	24.00 x 20.00 x 10.62 610 x 508 x 270	A24N20MP	A24N20MPP	21.00 x 18.50 533 x 470	14	21.88 556	15.00 381	2.50 64	1.06 27	0.31 8	10.00 254	1.50 38
A30N24CLP	30.00 x 24.00 x 10.62 762 x 610 x 270	A30N24MP	A30N24MPP[a]	21.00 x 22.50 533 x 572	12	27.50 699	16.75 425	3.62 92	1.25 32	0.44 11	10.00 254	2.00 51
A24N24DLP	24.00 x 24.00 x 12.62 610 x 610 x 321	A24N24MP	A24N24MPP[a]	21.00 x 22.50 533 x 572	12	21.88 556	19.00 483	2.50 64	1.06 27	0.31 8	12.00 305	1.50 38
A30N24DLP	30.00 x 24.00 x 12.62 762 x 610 x 321	A30N24MP	A30N24MPP[a]	26.00 x 22.50 660 x 724	12	27.50 699	16.75 425	3.62 92	1.25 32	0.44 11	12.00 305	2.00 51
A36N30DLP	36.00 x 30.00 x 12.62 914 x 762 x 321	A36N30MP	A36N30MPP[a]	32.00 x 28.50 813 x 724	12	33.50 851	22.75 578	3.62 92	1.25 32	0.44 11	12.00 305	2.00 51

Purchase panels separately.

[a]Flanged on all four sides

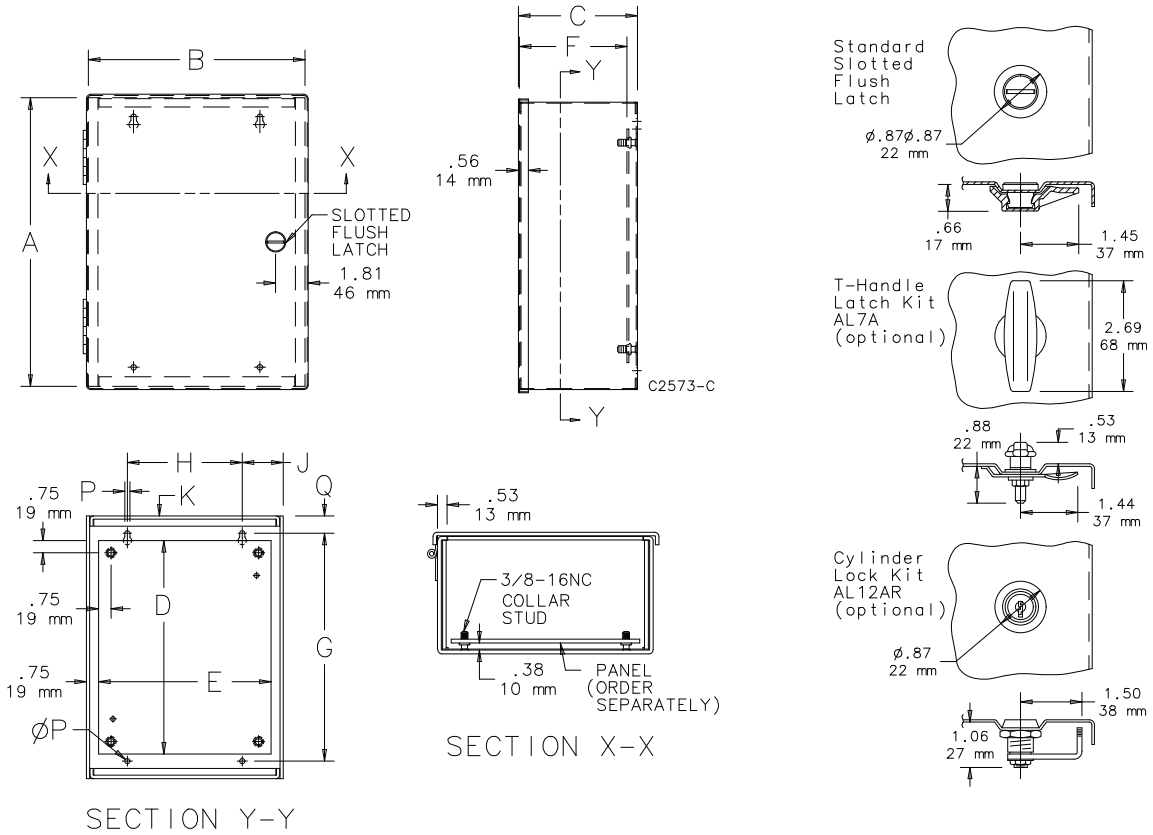

Heard Everywhere Since 1947

PERFORMANCE

Power Handling, Nominal	15 watts RMS (nominal) measured per EIA Standard RS 426-B
Sensitivity	112.2dB log average (1W/1M) 124.0dB maximum SPL (calculated based on power rating and measured sensitivity)
Frequency Response	537Hz-4.5kHz (±6dB)
Dispersion Angle	50° conical (2kHz Octave Band)
Impedance	5000, 2500, 1300, 670, 330, 90, 45 ohms
Transformer Taps	Screwdriver adjustable: 25V @ .13, .25, .48, .93, 1.9, 6.9, 13.9W 70V @ 1, 2, 3.8, 7.5, 15W 100V @ 2, 4, 7.7, 15W
Connections	Screw terminals with provisions for strain relief. Protected by a plastic cover affixed by 2 screws.

PHYSICAL

Dimensions	8.94" (227.14mm) dia. x 9.38" (238.46mm) deep
Housing Material	Aluminum with ABS plastic terminal cover
Mounting Base	2.875" (73mm) dia. with three equally spaced .28" (7.1mm) dia. holes.
Mounting Bolt Circle	2.25" (57mm) dia.
Net Weight	3.55 lbs. (1.6kg)
Shipping Weight	4.55 lbs. (2.1kg)

SPL vs. Frequency 1W/1M

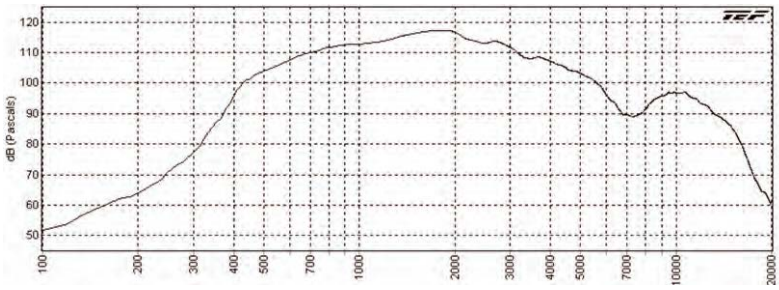

Low Frequency Protection: The LH-15TA is not designed to operate below 300 Hz. Head-end processing equipment should include a 300 Hz high-pass filter with a roll-off of 6dB per octave to limit the low frequency input to the horn. If head-end processing is not available, an alternate method of providing low frequency protection for the horn driver is to insert one non-polarized series capacitor at high side input [terminal 2 (+)] of each horn.

Typical protection capacitor values

Model No.	*25 Volt Line*	*70 Volt Line*	*100 Volt Line*
LH-15TA	15 mfd	2 mfd	1 mfd

Polar Data:

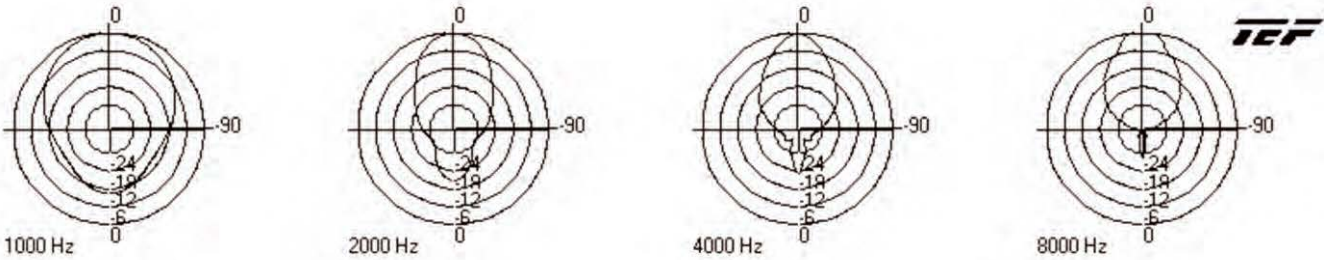

Connections:

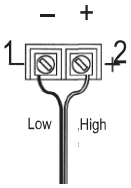

A terminal for 2-wire connection is located on the rear of the horn in a recessed area with integral strain relief and protective plastic cover.

Be sure to observe polarity ("–" to terminal 1 and "+" to terminal 2).

Transformer Settings:

Switch Position	*Impedance*	*Watts @ 25V*	*Watts @ 70V*	*Watts @100V*
1	5000	.13	1	2
2	2500	.25	2	4
3	1300	.48	3.8	7.7
4	670	.93	7.5	15
5	330	1.9	15	**DO NOT USE ***
6	90	6.9	**DO NOT USE ***	**DO NOT USE ***
7	45	13.9	**DO NOT USE ***	**DO NOT USE ***

* ***IMPORTANT:*** *Note that switch positions 6 and 7 are not used on 70V applications; and positions 5, 6, and 7 are not used on 100V applications. They exceed the capacity of the driver and transformer and could damage or destroy the driver and/or amplifier.*

Lowell makes every effort to provide accurate information while reserving the right to change specifications and/or improve manufacturing methods without notification.
©2015 Lowell Manufacturing Company, 100 Integram Dr., Pacific MO 63069 | 800.325.9660 | www.lowellmfg.com

Lowell™

Heard Everywhere Since 1947

US STEEL

Made in the USA

Model No.

8XD4

Recessed Steel Enclosure

• For use with 8" speaker
• For new or existing construction

One top and four side knockouts.

Construction & Features

- **Material:** U.S. steel
- **Size:** 10" dia. x 4" deep, tapered
- **Volume:** 0.147 cu.ft.
- **Knockouts:** One planished (0.5") knockout on top to preserve leak-free integrity of enclosure in return air plenums. Four (0.5-0.75") side knockouts placed at 90-degree intervals.
- **Lining:** Polyurethane foam disc helps reduce acoustic or mechanical resonance. Disc meets UL flammability CAL-117 for resonance and vibration control.
- **Hardware:** Factory-installed 8-32 retaining clips can be used to mount a standard screw-mount grille
- **Finish:** White powder epoxy
- **Origin:** Made in the U.S.A. with 100% Certified U.S. steel

Includes polyurethane foam disc to help reduce acoustic or mechanical resonance

Tapered for stackability

A&E Specifications

The enclosure for recessed installation of an 8 in. driver shall be Lowell Model No. 8XD4, which shall be fabricated of certified U.S. steel and have a white powder epoxy finish. The unit shall have a diameter of 10 inches and a depth of 4 inches. It shall include a polyurethane foam disc that is UL Listed to meet flammability CAL-117 for resonance and vibration control. The enclosure shall also feature one planished (0.5 in.) knockout on top and four (0.5 to 0.75 in.) knockouts on sides (spaced at a 90-degree interval).

Model Number

Model No.	*Description*	*Diameter (in)*	*Depth (in)*	*Volume (cu.ft.)*	*Lining*	*Top Knockout*	*Side Knockouts*
8XD4	Steel enclosure	10	4	0.147	foam disc	1	4

Diameter measurement is outside backbox cylinder.

Lowell makes every effort to provide accurate information while reserving the right to change specifications and/or improve manufacturing methods without notification.
©2015 Lowell Manufacturing Company, 100 Integram Dr., Pacific MO 63069 | 800.325.9660 | www.lowellmfg.com

Heard Everywhere Since 1947

Drawings

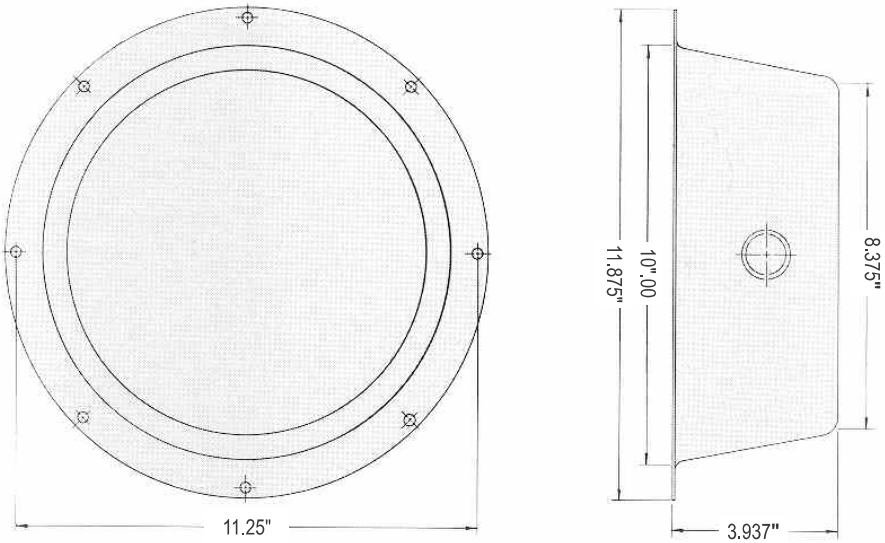

Compatible Components (order separately)

SPEAKER . . . . . .Standard 8" E.I.A. driver with magnet weight not more than 10 oz., mounted transformer with taps not more than 8W.

GRILLE . . . . . .Model No's. A8-AW, CS-8H, LO-8P, RS8-AW, WB8, WB-8H

TILE-BRIDGE . . . . . .Model No's. LBS8, LBS8-R1

Lowell makes every effort to provide accurate information while reserving the right to change specifications and/or improve manufacturing methods without notification.
©2015 Lowell Manufacturing Company, 100 Integram Dr., Pacific MO 63069 | 800.325.9660 | www.lowellmfg.com

Lowell™

Heard Everywhere Since 1947

US STEEL

Made in the USA

Model No.

8XD4-S

Recessed Steel Enclosure with straps

• For use with 8" speaker
• For new or existing construction

One top and four side knockouts plus two straps.

Construction & Features

- **Material:** U.S. steel
- **Size:** 10" dia. x 4" deep, tapered for stackability
- **Volume:** 0.147 cu.ft.
- **Knockouts:** One planished knockout (0.5") on top to preserve leak-free integrity of enclosure in return air plenums. Four (0.5-0.75") side knockouts placed at 90-degree intervals.
- **Lining:** Polyurethane foam disc helps reduce acoustic or mechanical resonance. Disc meets UL flammability CAL-117 for resonance and vibration control.
- **Straps:** Two flexible perforated straps for use with seismic-restraint cables or when enclosure is to be suspended in an open architecture application.
- **Hardware:** Factory-installed 8-32 retaining clips can mount a standard screw-mount grille
- **Finish:** White powder epoxy
- **Origin:** Made in the U.S.A. with 100% Certified U.S. steel

Includes polyurethane foam disc to help reduce acoustic or mechanical resonance

A&E Specifications

The enclosure for recessed installation of an 8 in. driver shall be Lowell Model No. 8XD4-S, which shall be fabricated of certified U.S. steel and have a white powder epoxy finish. The unit shall have a diameter of 10 inches and a depth of 4 inches. It shall include a polyurethane foam disc that is UL Listed to meet flammability CAL-117 for resonance and vibration control. The enclosure shall also feature one planished (0.5 in.) knockout on top, four (0.5 to 0.75 in.) knockouts on sides (spaced at 90-degree intervals), and two flexible perforated mounting straps (spaced at 180-degree interval).

Model Number

Model No.	*Description*	*Diameter (in)*	*Depth (in)*	*Volume (cu.ft.)*	*Lining*	*Top Knockout*	*Side Knockouts*	*Straps*
8XD4-S	Steel enclosure	10	4	0.147	foam disc	1	4	2

Diameter measurement is outside backbox cylinder.

Lowell makes every effort to provide accurate information while reserving the right to change specifications and/or improve manufacturing methods without notification.
©2015 Lowell Manufacturing Company, 100 Integram Dr., Pacific MO 63069 | 800.325.9660 | www.lowellmfg.com

Heard Everywhere Since 1947

Drawings

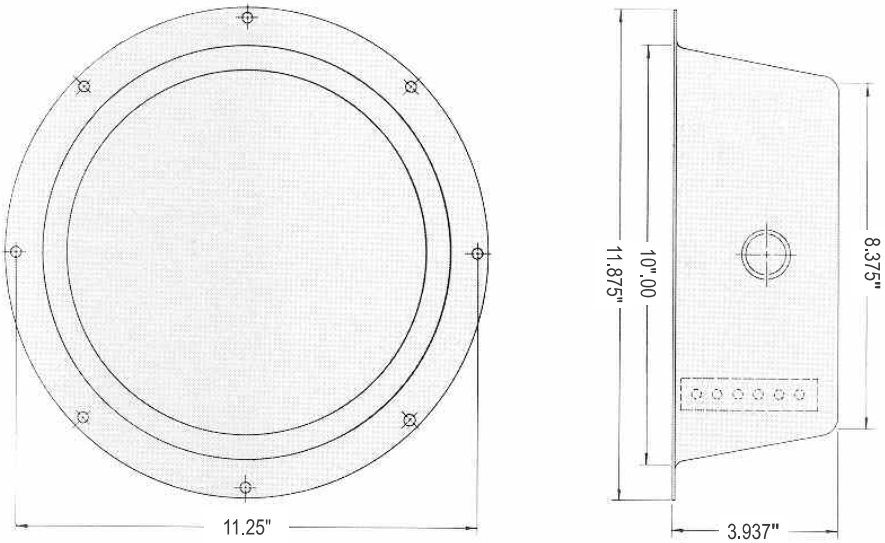

Compatible Components (order separately)

SPEAKER . . . . . .Standard 8" E.I.A. driver with magnet weight not more than 10 oz., mounted transformer with taps not more than 8W.

GRILLE . . . . . .Model No's. A8-AW, CS-8H, LO-8P, RS8-AW, WB8, WB-8H

TILE-BRIDGE . . . . . .Model No's. LBS8, LBS8-R1

Lowell makes every effort to provide accurate information while reserving the right to change specifications and/or improve manufacturing methods without notification.
©2015 Lowell Manufacturing Company, 100 Integram Dr., Pacific MO 63069 | 800.325.9660 | www.lowellmfg.com

Lowell™

Heard Everywhere Since 1947

US STEEL

Made in the USA

Model No.

8XD4-P

Recessed Steel Enclosure

• For use with 8" speaker
• For new or existing construction

One top knockout.

Includes polyurethane foam disc to help reduce acoustic or mechanical resonance

Construction & Features

- **Material:** U.S. steel
- **Size:** 10" dia. x 4" deep, tapered for stackability
- **Volume:** 0.147 cu.ft.
- **Knockouts:** Features one planished knockout (0.5") on top to preserve leak-free integrity of enclosure in return air plenums.
- **Lining:** Polyurethane foam disc helps reduce acoustic or mechanical resonance. Disc meets UL flammability CAL-117 for resonance and vibration control.
- **Hardware:** Factory-installed 8-32 retaining clips can mount a standard screw-mount grille
- **Finish:** White powder epoxy
- **Origin:** Made in the U.S.A. with 100% Certified U.S. steel

A&E Specifications

The enclosure for recessed installation of an 8 in. driver shall be Lowell Model No. 8XD4-P, which shall be fabricated of certified U.S. steel with a white powder epoxy finish. The unit shall have a diameter of 10 inches and a depth of 4 inches. It shall include a polyurethane foam disc that is UL Listed to meet flammability CAL-117 for resonance and vibration control. The enclosure shall also feature one planished (0.5 in.) knockout on top.

Model Number

Model No.	*Description*	*Diameter (in)*	*Depth (in)*	*Volume (cu.ft.)*	*Lining*	*Top Knockout*	*Side Knockouts*
8XD4-P	Steel enclosure	10	4	0.147	foam disc	1	-----

Diameter measurement is outside backbox cylinder.

Lowell makes every effort to provide accurate information while reserving the right to change specifications and/or improve manufacturing methods without notification.
©2015 Lowell Manufacturing Company, 100 Integram Dr., Pacific MO 63069 | 800.325.9660 | www.lowellmfg.com

Heard Everywhere Since 1947

Drawings

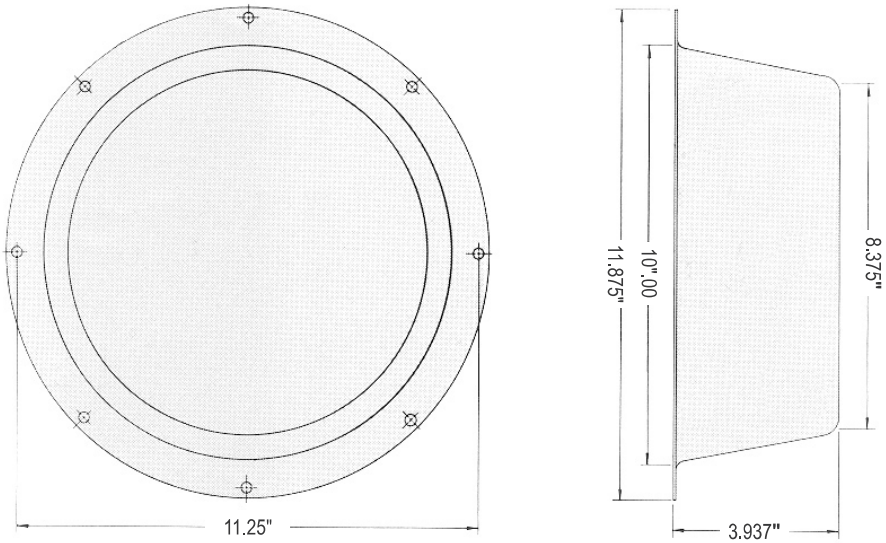

Compatible Components (order separately)

SPEAKER . . . . . .Standard 8" E.I.A. driver with magnet weight not more than 10 oz., mounted transformer with taps not more than 8W.

GRILLE . . . . . .Model No's. A8-AW, CS-8H, LO-8P, RS8-AW, WB8, WB-8H

TILE-BRIDGE . . . . . .Model No's. LBS8, LBS8-R1

Lowell makes every effort to provide accurate information while reserving the right to change specifications and/or improve manufacturing methods without notification.
©2015 Lowell Manufacturing Company, 100 Integram Dr., Pacific MO 63069 | 800.325.9660 | www.lowellmfg.com

Lowell™

Heard Everywhere Since 1947

Model No.

RPAK-810-72

Ceiling Speaker System

- **Includes two sets – driver, xfmr, grille, enclosure, tile-bridge**

The RPAK speaker system is packaged in a single box for easy ordering, inventory and installation. The system includes two each: 8" 15W driver, dual voltage transformer, white steel grille, round enclosure, and tile-bridge. It's an excellent choice for general purpose paging and distributed music applications where economy and installation costs are prime considerations.

Construction & Features

The RPAK includes two each —

- Driver (No. 810): 8 in. 15W dual cone driver with 10oz. magnet, 54Hz-11.6kHz (±6dB) and 50Hz-20kHz (±6.6dB) frequency response, 97.9dB Avg sensitivity measured 1W/1M. Driver uses molded high fiber content cone to achieve smooth extended response with a clean, natural sound.
- Dual-voltage (70/25V) transformer with primary taps at .25, .5, 1, 2, and 5W.
- Grille (No. WB-8): factory mounted to driver with welded studs; installs to backbox and tile-bridge with four white screws (provided). Precision-formed steel with attractive white finish that blends nicely with suspended tile ceilings.
- Two backboxes (No. 8XD4): formed from heavy gauge steel with acoustic pad and four 1/2 - 3/4 in. knockouts for conduit. Punched lip for screw-mount installation of backbox to tile bridge. 10 in. diameter x 4 in. deep. White powder epoxy finish. Note: Does not include 8-32 screws to mount the backboxes to tile bridges.
- Two tile-bridges (No. LBS8-R1): transfer speaker assembly weight to ceiling support structure in suspended tile ceilings. Galvanized steel with four wire-tie holes for seismic anchoring, if required. 23.75"L.

A&E Specifications

The 8" speaker system shall be Lowell Model No. RPAK-810-72 which shall include two 8" dual cone drivers with wired dual voltage transformers and mounted white steel grilles boxed with two enclosures and two tile-bridges to transfer the speaker assembly weight to the ceiling support structure in suspended tile ceilings. The driver shall have an RMS power rating of 15W and employ a 10oz. ceramic magnet and molded high fiber cone. Frequency response shall be 54Hz-11.6kHz (±6dB) and 50Hz-20kHz (±6.6dB) with sensitivity of 97.9dB avg. measured 1W/1M. The transformer shall be 70/25V with primary taps at .25, .5, 1, 2, and 5W. The grille shall be steel with white powder epoxy finish. The steel enclosure shall measure 10"dia. x 4"D with 1/2-3/4" knockouts for conduit and a white powder epoxy finish. The tile-bridges shall be 23.75"L galvanized steel with holes for seismic anchoring.

Lowell makes every effort to provide accurate information while reserving the right to change specifications and/or improve manufacturing methods without notification.
©2015 Lowell Manufacturing Company, 100 Integram Dr., Pacific MO 63069 | tel. 800.325.9660 | www.lowellmfg.com

Driver + Transformer Specifications

Driver + Xfmr. No.	Driver Size	Driver Power Rating	Driver Type	Ceramic Magnet	Frequency Response	Dispersion 2000Hz (-6dB)	Voice Coil Impedance	Sensitivity 1W / 1M	Depth (w/o xfmr)	Weight (w/o xfmr)	Max SPL
810T72	8"	15W	Dual cone	10 oz.	51Hz-11.6kHz (±6dB) 50Hz-20kHz (±6.4dB)	95 degrees conical	8 ohms	97.9dB Avg.	2.84"	2.4 lbs.	104.9dB *

** Calculated value 1M @ maximum transformer tap (5W).*
Additional technical information is available on specification sheet for Driver No. 810.

Installation Overview

1. Place T-bridge in position on finish (room) side of ceiling tile. Use center opening as template to score and cut ceiling tile.
2. Mark or punch four grille mounting holes on finish side of tile. Grille mounting holes are adjacent to tabs on T-bridge (see drawing).
3. Turn ceiling tile over and place T-bridge on back side over cutout, then push tabs into cutout so they grip the tile. Use 8-32 screws (not included) to mount enclosure.
4. Pull wiring into backbox per code and job requirements and make wiring connections.
5. Use the four white screws provided to screw-mount driver/grille assembly to enclosure using the grille mounting holes marked on tile. See specification sheet for LBS8-R1 tile-bridge for more detailed instructions.

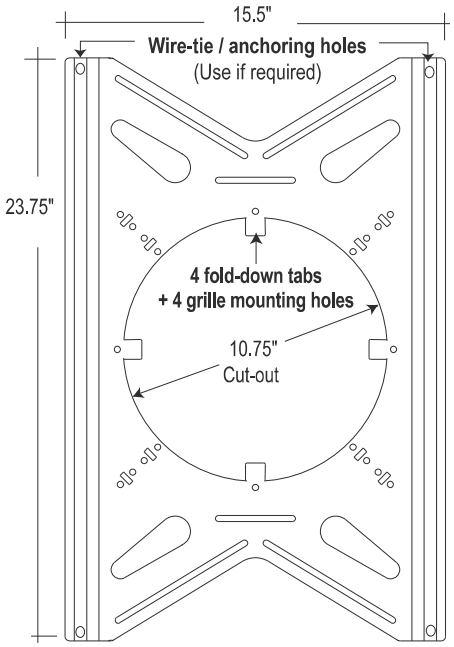

Lowell makes every effort to provide accurate information while reserving the right to change specifications and/or improve manufacturing methods without notification.
©2015 Lowell Manufacturing Company, 100 Integram Dr., Pacific MO 63069 | tel. 800.325.9660 | www.lowellmfg.com

Lowell™

Heard Everywhere Since 1947

Model No.

810

8" 15W Dual Cone Driver

Eight inch driver with 10 oz. magnet provides a step up in full range performance from the commercial industry standard 8" 5 oz. driver, It provides solid performance and value in just about any basic paging or background music system requiring clear reproduction of music and voice communications.

Features

- Highly efficient magnetic structure energized by 10 oz. ceramic magnet.
- 3/4" hard fiber whizzer cone is mechanically coupled to 1" voice coil for extended high frequency response with fine clarity
- Molded fibre cone enhances mid- and low-range frequency performance.
- Frame is stamped 20-gauge steel with zinc-plated finish to prevent corrosion.
- Power rating 15W
- Average sensitivity 97.9dB (SPL at 1W/1M)
- Frequency response 54Hz-11.6kHz (±6dB), 50Hz-20kHz (±6.6dB)
- Dispersion angle 95 degrees @2000Hz (-6dB)
- Manufactured in USA to meet or exceed all applicable EIA standards.

0.344 x 0.218
(0.9 cm x 0.6 cm)
Obround holes

A&E Specifications

The dual cone 8-inch speaker shall be Lowell Model No. 810 which shall be of the permanent magnet type having a seamless molded fiber cone with a hard fiber whizzer cone mechanically coupled to a voice coil for extended high frequency response. It shall be capable of producing a uniform audible frequency response over the range of 54Hz-11.6kHz (±6dB), 50Hz-20kHz (±6.6dB) with dispersion angle of 95 degrees @2000Hz (-6dB). Average sensitivity shall measure 97.9dB (SPL at 1W/1M). Power rating shall be 15 watts RMS. The voice coil shall have a 1-in. dia. and shall operate in a magnetic field derived from a strontium ferrite (ceramic) magnet having a nominal weight of 10 oz. Voice coil impedance shall be 8ohms. The driver shall have a round, structurally reinforced stamped 20-ga. steel frame with 8.062" overall diameter and eight obround holes equally spaced at 45 degrees on a 7.625" dia. mounting bolt circle. Overall depth shall not exceed 2.84". External metal parts shall be zinc-plated to resist rust and corrosion.

Drawings

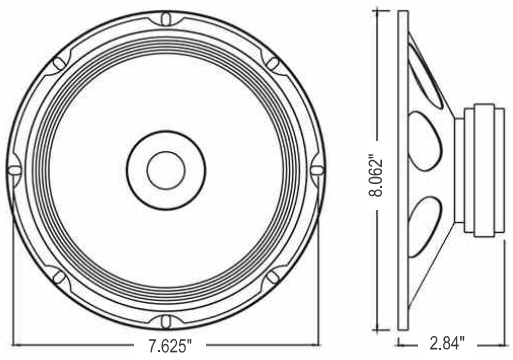

Fits grilles with 7.625" - 7.688" mounting centers

Lowell makes every effort to provide accurate information while reserving the right to change specifications and/or improve manufacturing methods without notification.
©2015 Lowell Manufacturing Company, 100 Integram Dr., Pacific MO 63069 | tel. 800.325.9660 | www.lowellmfg.com

Driver Specifications

PERFORMANCE

Power Rating	15 watts RMS measured per EIA Standard RS-426B
Sensitivity	97.9dB Average SPL (measured 2.83V @ 1m)
	109.7dB Maximum SPL (calculated based on power rating and measured sensitivity)
Impedance	8 ohms (nominal), minimum 7.6ohms @342Hz
Frequency Response	54Hz-11.6kHz (±6dB), 50Hz-20kHz (±6.6dB)
Dispersion Angle	95 degrees conical @ 2000Hz octave (-6dB)

PHYSICAL - WOOFER

Magnet Weight, Material	10 oz. (264g), strontium ferrite ceramic
Voice Coil Diameter, Material	1 in. (26mm), copper wire
Cone Material	Dual cone paper with self edge surround
Terminals	Quick disconnect type - spade lugs

MECHANICAL

Basket	20 gauge stamped steel with zinc plating
Outside Diameter	8.062 inch (205mm)
Mounting Bolt Circle	7.625 inch (194mm) with 8 obround holes equally spaced at 45 degrees.
Cutout Diameter	7.15 inch (182mm)
Mounting Depth	2.84 inch (72mm)
Net Weight	2.0 lbs. (0.91kg)

THIELE-SMALL PARAMETERS

Pe.....15 W	**Qts**.....0.779	**BL**.....5.9 Tm	**Sd**.....227.0 cm^2
Fs.....96.8 Hz	**Qes**.....0.859	**Efficiency, h**.....2.8 %	**Mms**.....7.23 g
Xmax.....0.3 mm	**Qms**.....8.43	**Vas**.....27.4 liters, 1672 cu.in.	**Cms**.....374.8 uM/N
Re.....6.9 ohms			

Scope of Performance and Power Tests

Lowell drivers and loudspeaker systems are tested to provide specifiers and contractors with data that reflects the performance of production products. Testing equipment includes the GoldLine TEF-20 analyzer (for performance measurements) and the LinearX LMS measurement system (for Thiele-Small Parameters).

Power Rating is tested based on EIA Standard RS-426B.

Frequency Response data is provided which is the measured frequency response range (defined by ±6dB) which is useful in predictive engineering calculations.

Sensitivity (SPL) data is presented in two ways: Log Average SPL is a computer calculated log average of the SPL measured at 1 meter with 1 watt input over the stated frequency response range. Maximum SPL is calculated based on the measured log average SPL and the 8ohm power rating of the speaker.

Dispersion Angle is defined as the angle of coverage that is no more than 6dB down from the on-axis value averaged over the 2000Hz octave band. Since speech intelligibility is very dependent upon the 2000Hz octave, this specification is quite useful in designing speech reinforcement systems that provide even coverage and speech intelligibility.

Thiele-Small Parameters for raw drivers are measured using the LinearX LMS measurement system. These parameters are useful in determining the optimum type and size of enclosure for a specific driver.

Impedance data is presented in three ways: Nominal Impedance is the generally accepted impedance for use in making comparisons with competitive products; the Impedance Curve is a graphical representation of the impedance that is measured in the lab and gives the impedance of the device over the audio frequency range; Minimum Impedance is the lowest impedance measurement at a frequency within the specified frequency response range of the speaker.

Polar data is presented for the averaged one octave band surrounding the center frequencies of 1000Hz, 2000Hz, 4000Hz, and 8000Hz. Radial polar response curves show the relative change in sound pressure level as one moves from directly on-axis to an increasingly off-axis listening position.

Lowell makes every effort to provide accurate information while reserving the right to change specifications and/or improve manufacturing methods without notification.
©2015 Lowell Manufacturing Company, 100 Integram Dr., Pacific MO 63069 | tel. 800.325.9660 | www.lowellmfg.com

SPL vs. Frequency 1W/1M (half space) On-axis

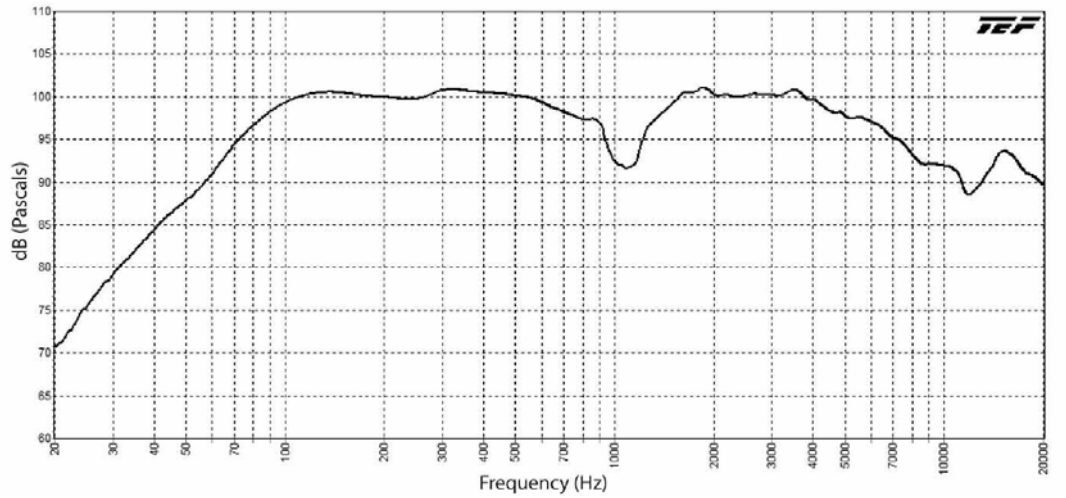

Impedance

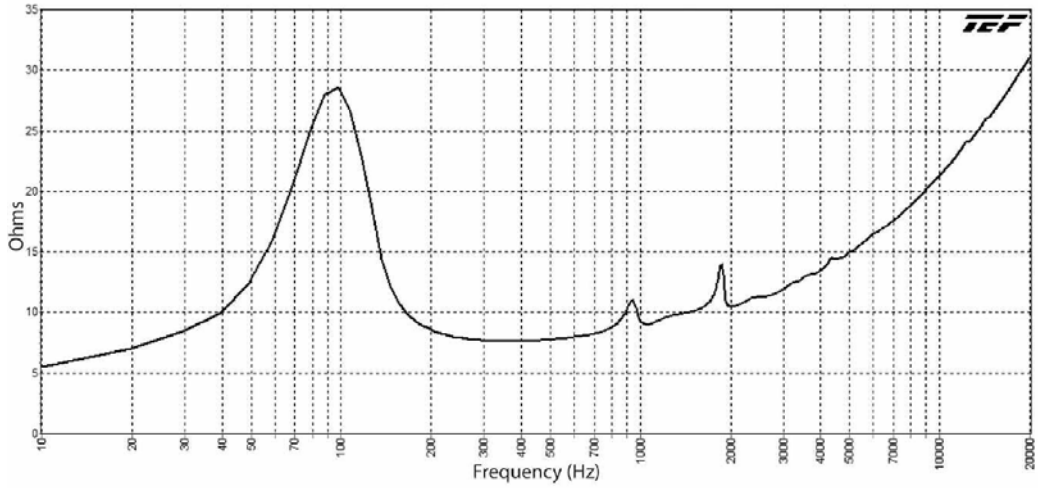

Polar Data (half space)

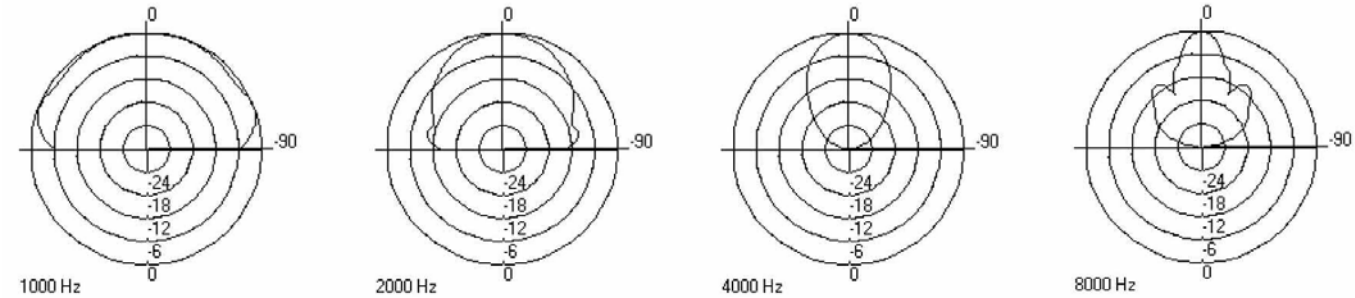

Lowell makes every effort to provide accurate information while reserving the right to change specifications and/or improve manufacturing methods without notification.
©2015 Lowell Manufacturing Company, 100 Integram Dr., Pacific MO 63069 | tel. 800.325.9660 | www.lowellmfg.com

Lowell™

Heard Everywhere Since 1947

Made in the USA
with domestic and global components.

Model No.

810-T72

8" Dual Cone Driver & Dual-Voltage Transformer

Dual cone driver with mounted dual voltage 70/25V transformer provides solid performance for basic paging and background music.

Features

- 8" dual cone driver with 10 oz. ceramic magnet , 3/4" hard fiber whizzer cone, 1" voice coil, and 20-ga. steel frame with zinc-plated finish
- Power rating 15W
- Mounted and wired 70/25V dual voltage transformer (No. TLM-572) has primary taps at 0.25, 0.5, 1, 2, 5W.
- Meets or exceeds all applicable EIA standards

A&E Specifications

The dual cone 8-inch speaker shall be Lowell Model No. 810-T72 which shall be of the permanent magnet type having a seamless molded fiber cone with a hard fiber whizzer cone mechanically coupled to a voice coil for extended high frequency response. Power rating shall be 15 watts RMS. The voice coil shall have a 1-in. dia. and shall operate in a magnetic field derived from a strontium ferrite (ceramic) magnet having a nominal weight of 10 oz. Voice coil impedance shall be 8ohms. The driver shall have a round, structurally reinforced stamped 20-ga. steel frame with 8.062" overall diameter and eight obround holes equally spaced at 45 degrees on a 7.625" dia. mounting bolt circle. Overall depth shall not exceed 2.84". External metal parts shall be zinc-plated to resist rust and corrosion. The mounted transformer shall be 70/25V dual voltage with selectable taps at .25, .5, 1, 2, and 5W. The assembly shall be capable of producing a uniform audible frequency response over the range of 51Hz-11.6kHz (±6dB), 50Hz-20kHz (±6.4dB) with dispersion angle of 95 degrees conical @2000Hz (-6dB). Average sensitivity shall measure 97.9dB (SPL at 1W/1M).

Driver + Transformer Specifications

Driver + Xfmr. No's.	*Driver Type*	*Driver Power Rating*	*Driver Magnet Wt.*	*Transformer Taps*	*Assembly Frequency Response*	*Assembly Dispersion @2000Hz Octave (-6dB)*	*Assembly Sensitivity*	*Assembly Mtg. Depth*	*Max SPL*
810 + TLM-572	Dual cone 8ohm	15W	10 oz.	.25, .5, 1, 2, 5W @70/25V	51Hz-11.6kHz (±6dB) 50Hz-20kHz (±6.4dB)	95 degrees conical	97.9dB Avg SPL	2.84"	104.9 **

** Minimum depth required for assembly to be rear-mounted to grille in an enclosure.*
*** Calculated based on 5W maximum transformer power tap and measured sensitivity.*
Additional information available on specification sheet for Driver No. 810.

Lowell makes every effort to provide accurate information while reserving the right to change specifications and/or improve manufacturing methods without notification.
©2015 Lowell Manufacturing Company, 100 Integram Dr., Pacific MO 63069 | 800.325.9660 | www.lowellmfg.com

Lowell™

Heard Everywhere Since 1947

Made in the USA
with domestic and global components.

Model No.

810-T470

8" Dual Cone Driver & 70V Transformer

Dual cone driver with mounted 70V transformer provides solid performance for basic paging and background music.

Features

- 8" dual cone driver with 10 oz. ceramic magnet , 3/4" hard fiber whizzer cone, 1" voice coil, and 20-ga. steel frame with zinc-plated finish
- Power rating 15W
- Mounted and wired 70V transformer (No. TLM-470) has primary taps at 0.5, 1, 2, 4W
- Meets or exceeds all applicable EIA standards

A&E Specifications

The dual cone 8-inch speaker shall be Lowell Model No. 810-T470 which shall be of the permanent magnet type having a seamless molded fiber cone with a hard fiber whizzer cone mechanically coupled to a voice coil for extended high frequency response. Power rating shall be 15 watts RMS. The voice coil shall have a 1-in. dia. and shall operate in a magnetic field derived from a strontium ferrite (ceramic) magnet having a nominal weight of 10 oz. Voice coil impedance shall be 8ohms. The driver shall have a round, structurally reinforced stamped 20-ga. steel frame with 8.062" overall diameter and eight obround holes equally spaced at 45 degrees on a 7.625" dia. mounting bolt circle. Overall depth shall not exceed 2.84". External metal parts shall be zinc-plated to resist rust and corrosion. The mounted transformer shall be 70V with selectable taps at 0.5, 1, 2, and 4W. The assembly shall be capable of producing a uniform audible frequency response over the range of 51Hz-11.4kHz (±6dB), 50Hz-20kHz (±6.7dB) with dispersion angle of 95 degrees conical @2000Hz (-6dB). Average sensitivity shall measure 97.3dB (SPL at 1W/1M).

Driver + Transformer Specifications

Driver + Xfmr. No's.	*Driver Type*	*Driver Power Rating*	*Driver Magnet Wt.*	*Transformer Taps*	*Assembly Frequency Response*	*Assembly Dispersion @2000Hz Octave (-6dB)*	*Assembly Sensitivity*	*Assembly Mtg. Depth*	*Max SPL*
810 + TLM-470	Dual cone 8ohm	15W	10 oz.	0.5, 1, 2, 4W @70V	51Hz-11.4kHz (±6dB) 50Hz-20kHz (±6.7dB)	95 degrees conical	97.3dB Avg SPL	2.84"	103.3 **

** Minimum depth required for assembly to be rear-mounted to grille in an enclosure.*
*** Calculated based on 4W maximum transformer power tap and measured sensitivity.*
Additional information available on specification sheet for Driver No. 810.

Lowell makes every effort to provide accurate information while reserving the right to change specifications and/or improve manufacturing methods without notification.
©2015 Lowell Manufacturing Company, 100 Integram Dr., Pacific MO 63069 | 800.325.9660 | www.lowellmfg.com

Lowell™

Heard Everywhere Since 1947

Made in the USA
with domestic and global components.

Model No.

810-T870

8" Dual Cone Driver & 70V Transformer

Dual cone driver with mounted 70V transformer provides solid performance for basic paging and background music.

Features

- 8" dual cone driver with 10 oz. ceramic magnet , 3/4" hard fiber whizzer cone, 1" voice coil, and 20-ga. steel frame with zinc-plated finish
- Power rating 15W
- Mounted and wired 70V transformer (No. TLM-870) has primary taps at 1, 2, 4, and 8W
- Meets or exceeds all applicable EIA standards

A&E Specifications

The dual cone 8-inch speaker shall be Lowell Model No. 810-T870 which shall be of the permanent magnet type having a seamless molded fiber cone with a hard fiber whizzer cone mechanically coupled to a voice coil for extended high frequency response. Power rating shall be 15 watts RMS. The voice coil shall have a 1-in. dia. and shall operate in a magnetic field derived from a strontium ferrite (ceramic) magnet having a nominal weight of 10 oz. Voice coil impedance shall be 8ohms. The driver shall have a round, structurally reinforced stamped 20-ga. steel frame with 8.062" overall diameter and eight obround holes equally spaced at 45 degrees on a 7.625" dia. mounting bolt circle. Overall depth shall not exceed 3.0" for the assembly. External metal parts shall be zinc-plated to resist rust and corrosion. The mounted transformer shall be 70V with selectable taps at 1, 2, 4, and 8W. The assembly shall be capable of producing a uniform audible frequency response over the range of 50Hz-11.6kHz (±6dB), 50Hz-20kHz (±6.4dB) with dispersion angle of 95 degrees conical @2000Hz-6dB. Average sensitivity shall measure 97.9dB (SPL at 1W/1M).

Driver + Transformer Specifications

Driver + Xfmr. No's.	*Driver Type*	*Driver Power Rating*	*Driver Magnet Wt.*	*Transformer Taps*	*Assembly Frequency Response*	*Assembly Dispersion @2000Hz Octave (-6dB)*	*Assembly Sensitivity*	*Assembly Mtg. Depth*	*Max SPL*
810 + TLM-870	Dual cone 8ohm	15W	10 oz.	1, 2, 4, 8W @70V	50Hz-11.6kHz (±6dB) 50Hz-20kHz (±6.4dB)	95 degrees conical	97.9dB Avg SPL	3.0"	106.9 **

** Minimum depth required for assembly to be rear-mounted to grille in an enclosure.*
*** Calculated based on 8W maximum transformer power tap and measured sensitivity.*
Additional information available on specification sheet for Driver No. 810.

Lowell makes every effort to provide accurate information while reserving the right to change specifications and/or improve manufacturing methods without notification.
©2015 Lowell Manufacturing Company, 100 Integram Dr., Pacific MO 63069 | 800.325.9660 | www.lowellmfg.com

Model No's.
WB-8
Round Screw-Mount Grille

• For 8” speaker

FRONT

Construction & Features:

- Industry standard steel ceiling grille for 8” loudspeaker
- Precision formed from single piece of 20-gauge steel, reinforced with 60-degree peripheral flange
- Perforated center, clean contoured edge
- 12.875” diameter with mounting projection of 0.25”
- Four 0.218” holes spaced at 90-degree intervals to screw-mount an 8” loudspeaker.
- 0.25” holes spaced at 90-degree intervals on 11.25” mounting bolt circle
- White (8-32 x 1-1/2”) Phillips-head screws to attach grille/speaker assembly to a backbox or mounting ring
- Includes (8-32 x 1”) welded studs with nuts for faster installation and concealed loudspeaker mounting streamlined appearance.

A&E Specifications:

The grille for 8” speakers shall be Lowell Model WB-8. It shall be fabricated one-piece 20-gauge steel reinforced with a peripheral flange of 60-degrees. The grille diameter shall be 12.875” with a shallow mounting projection of 0.25”. Each grille shall have four 0.25” holes spaced at 90-degree intervals on an 11.25” bolt circle for mounting grille to specified backbox or mounting ring. It shall be finished in white powder epoxy coating and include white screws for backbox mounting and welded studs for mounting specified 8” speaker.

REAR

Compatible Components: (order separately)

Backbox Model No .....810, 8A50, 8C10MRB, and CT830A

Horn Model No.....LUH-15T

Backbox Model Number CP84, CP87, CP810, DX108, XCP84, XCP87, XCP810, 8XD4, 8PSBX, RF841, RF871

Tile-Bridge Model No.....LBS8, LBS8-R1, LBS8-CP

Support Rail Model No.....SS series

Lowell makes every effort to provide accurate information while reserving the right to change specifications and/or improve manufacturing methods without notification.
©2015 Lowell Manufacturing Company, 100 Integram Dr., Pacific MO 63069 | 800.325.9660 | www.lowellmfg.com

Technical Drawing:

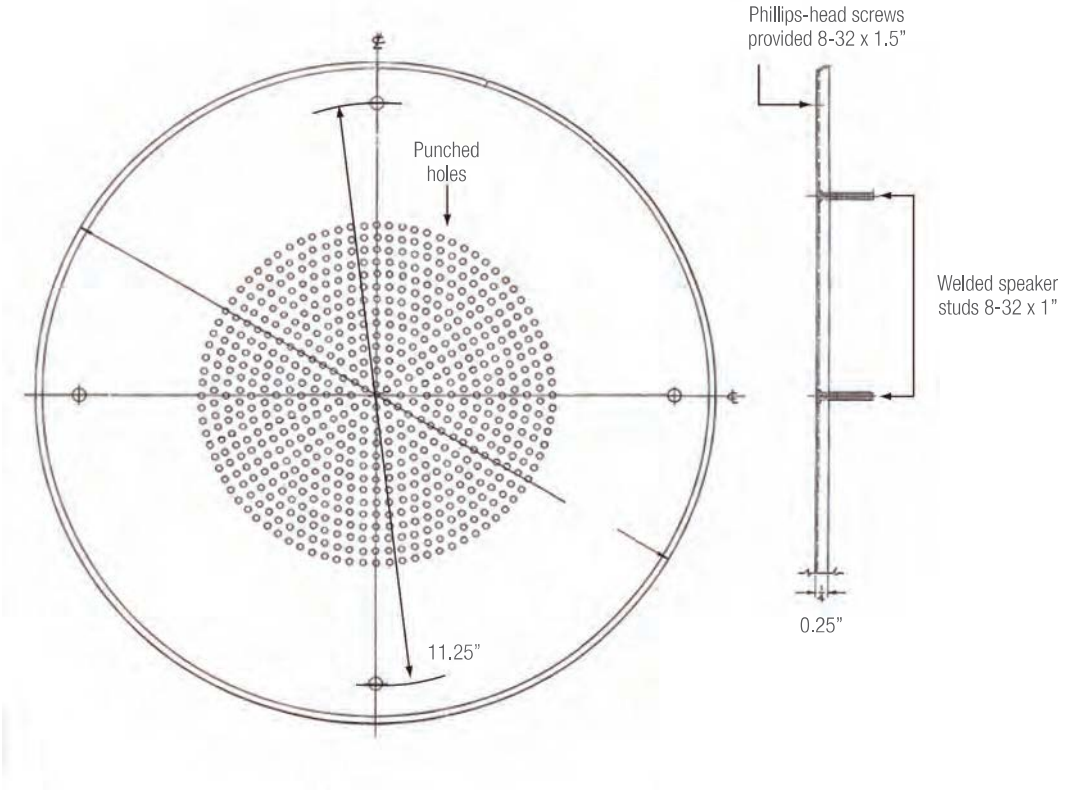

Accessory Selection Chart

Grille No.	Dia. (in)	For Speaker Size (in) *	Backbox No.	T-bridge or Rails (for suspended tile ceilings)
WB-8	12.875	8	CP84, CP87, CP810, DX108	LBS8-CP or SS series rails
			XCP84, XCP87, XCP810, 8XD4, 8PSBX	LBS8 or LBS8-R1
			RF841, RF871	n/a
			No backbox	LBS8 or LBS8-R1
			Mounting ring (instead of backbox) PR8-1624, RMP8	n/a

Lowell makes every effort to provide accurate information while reserving the right to change specifications and/or improve manufacturing methods without notification.
©2015 Lowell Manufacturing Company, 100 Integram Dr., Pacific MO 63069 | 800.325.9660 | www.lowellmfg.com

Model
TLM-572
DUAL-VOLTAGE Line Matching Transformer

Developed for high quality audio systems and general purpose paging applications where wide frequency response, low insertion loss, and high power handling are critical considerations.

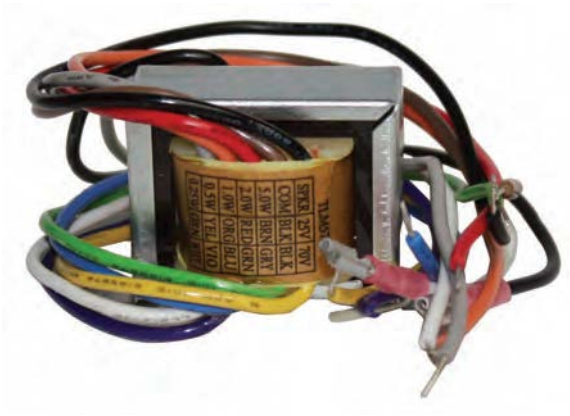

Features

- Primary Voltage: 70V or 25V
- Power Rating: 5 watts
- Primary Taps: 5, 2, 1, 0.5, 0.25 watts
- Secondary Impedance: 8 ohms
- Frequency Response: 50Hz–15kHz ± 1dB
- Insertion Loss: < 1dB

A&E Specifications

The line matching transformer shall be Lowell Model TLM-572. Primary voltage shall be 70V or 25V with a power rating of 5 watts. Primary taps shall be available at 5, 2, 1, 0.5, and 0.25 watts. Secondary impedance shall be 8 ohms. Frequency response of the transformer shall be 50Hz-15kHz ±1dB with insertion loss less than 1dB.

Model No. Summary

Model No.	*Primary Voltage*	*Power Rating*	*Primary Taps*	*Secondary Impedance*	*Core Size (in)*	*Insertion Loss*	*Frequency Response*	*Lead Length (in)*	*Weight (lbs)*
TLM-572	70V/25V	5W	5, 2, 1, .5, .25W	8 ohms	.5 X .5	<1dB	50Hz-15kHz ±1dB	8	0.4

Lowell makes every effort to provide accurate information while reserving the right to change specifications and/or improve manufacturing methods without notification.
©2016 Lowell Manufacturing Company, 100 Integram Dr., Pacific MO 63069 | 800.325.9660 | www.lowellmfg.com

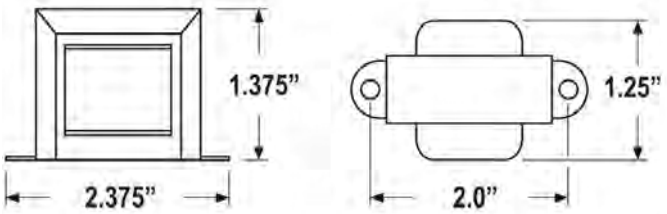

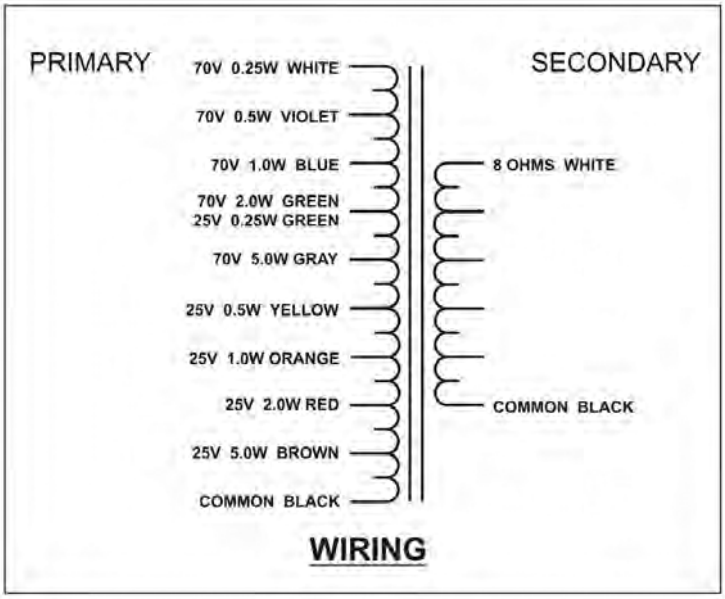

Lowell makes every effort to provide accurate information while reserving the right to change specifications and/or improve manufacturing methods without notification.
©2016 Lowell Manufacturing Company, 100 Integram Dr., Pacific MO 63069 | 800.325.9660 | www.lowellmfg.com

Appendix A: Wire Size Charts

Table 1 Speaker Cable Lengths (ft) and Gauges (AWG) for 70.7 V Line with 1 dB Power Loss

70.7 V	Wire Gauge (AWG)	10	12	14	16	18	20	22
Load Power (W)	Load Impedance (Ω)	Maximum Cable Distance (ft)						
10	490	*	*	*	7,200	4,600	2,800	1,800
15	327	*	*	7,600	4,800	3,000	1,920	1,200
20	245	*	9,200	5,600	3,600	2,200	1,400	900
30	163	10,000	6,200	3,800	2,400	1,500	960	600
40	122	7,400	4,600	2,800	1,800	1,100	700	450
60	81	5,000	3,200	1,900	1,200	730	480	**
100	49	2,900	1,820	1,120	720	230	**	**
200	24.5	1,450	910	560	360	110	**	**
400	12.2	730	460	280	180	**	**	**

Table 2 Speaker Cable Lengths (ft) and Gauges (AWG) for 25 V Line with 1 dB Power Loss

25 V	Wire Gauge (AWG)	10	12	14	16	18	20	22
Load Power (W)	Load Impedance (Ω)	Maximum Cable Distance (ft)						
10	61	3,700	2,300	1,400	900	575	350	225
15	41	2,500	1,550	950	600	375	240	150
20	31	1,850	1,150	700	450	275	175	113
30	20	1,250	775	475	300	188	120	**
40	15	925	575	350	225	138	**	**
60	10	625	400	238	150	**	**	**
100	6	363	228	140	90	**	**	**
200	3	181	114	70	**	**	**	**

* Greater than 10,000 feet

** Not recommended, may exceed safe current capacity of wire

Appendix B: Speaker Mounting Hardware and Accessory Reference

Model	Mounting Hardware	Accessories
BS-1030B/W	Ceiling/Wall-Mount Bracket included **WCB-12/W** Ceiling/Wall-Mount Bracket (optional)	
BS-20W/WHT	Ceiling/Wall-Mount Bracket included	
F-101C/M	**BBF-100** Back-box (requires TBF-100) **TBF-100** Tile-bridge	
F-121C/M	**BBF-100** Back-box (requires TBF-100) **TBF-100** Tile-bridge	**E-03R** 900 Series EQ Module **AC-120** Dual Channel Rack-Mount Processor
F-160G/W/M	**WCB-12/W** Ceiling/Wall-Mount Bracket	
F-160WP	**YS-150WP** Ceiling/Wall-Mount Bracket	
F-240G/W/M	**CMB-31/W** Ceiling-Mount Bracket **WCB-24/W** Wall-Mount Bracket (Economy) **WCB-31/W** Wall-Mount Bracket	
F-505G/W	**HY-30/W** Ceiling-Mount Bracket **HY-501B/W** Wall-Mount Bracket	
F-505WP/-L	**HY-30/W** Ceiling-Mount Bracket **HY-501B/W** Wall-Mount Bracket **YS-500** Pole/Wall-Mount Bracket (requires YS-60B for pole-mounting) **YS-60B** Pole bands	
F-605G/W	**HY-30/W** Ceiling-Mount Bracket **HY-601B/W** Wall-Mount Bracket	
F-605WP/-L	**HY-30/W** Ceiling-Mount Bracket **HY-601** Wall-Mount Bracket **YS-600** Pole/Wall-Mount Bracket (requires YS-60B for pole-mounting) **YS-60B** Pole bands	
FB-100	Six rigging points on enclosure (mounting hardware supplied by others).	**E-07S** 900 Series Low-Pass-Filter Module **MT-S0601** Matching Transformer
H-1	Mounting hardware included (see installation manual for details) **HY-H1** Wall-Mount Bracket also available separately for pre-construction (included w/ H-1). Note: Also fits RACO 953 gang-box, supplied by others, not required for installation.	**E-04R** 900 Series EQ Module
H-2/WP	Mounting hardware included (see installation manual for details)	**E-05R** 900 Series EQ Module
H-3/WP	Mounting hardware included (see installation manual for details)	**E-06R** 900 Series EQ Module
HB-1	Mounting hardware included (see installation manual for details)	**E-07S** 900 Series Low Pass-Filter Module **MT-S0601** Matching Transformer
PC-671R/RV	Back-box, tile-bridge, and rails (supplied by others)	

BICSI/TIA-607-B Telecommunications Grounding Busbars

- Meet BICSI and TIA-607-B requirements for network systems grounding applications
- Made of high conductivity copper and tin-plated to inhibit corrosion
- Come pre-assembled with brackets and insulators attached for quick installation
- Use Panduit component labels, sold separately, to identify busbars to meet TIA/EIA-606-A, see chart below

TGB

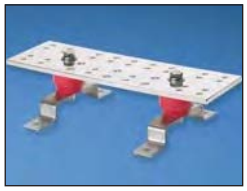

TMGB

Part Number	Bar Size	No. of Mounting Positions: 1/4" Stud Hole with 5/8" Hole Spacing	No. of Mounting Positions: 3/8" Stud Hole with 1" Hole Spacing	Std. Pkg. Qty.
Telecommunications Grounding Busbars (TGB)				
GB2B0304TPI-1	1/4" x 2" x 10"	4	3	1
GB2B0306TPI-1	1/4" x 2" x 12"	6	3	1
GB2B0312TPI-1	1/4" x 2" x 20"	12	3	1
GB2B0514TPI-1	1/4" x 2" x 24"	14	5	1
Telecommunications Main Grounding Busbars (TMGB)				
GB4B0612TPI-1	1/4" x 4" x 12"	12	6	1
GB4B0624TPI-1	1/4" x 4" x 20"	24	6	1
GB4B1028TPI-1	1/4" x 4" x 24"	28	10	1

Telecommunications Grounding and Bonding Conductor Label Kit

Part Number	Part Description	Std. Pkg. Qty.
LTYK	Label kit includes printed tag and one flame retardant cable tie.	1

For complete labeling solutions and product information, reference charts on pages O.1 – O.18.

Component Labels for BICSI/TIA-607-B Telecommunications Grounding Busbars

Suggested Label Solutions for TIA/EIA-606-A Compliance				
Telecommunications Grounding Busbar Part Number	Laser/Ink Jet Desktop Printer Label	TDP43ME Thermal Transfer Desktop Printer Label	PanTher™ LS8E Hand-Held Printer Label	Cougar™ LS9 Hand-Held Printer Label
All GB2B and GB4B Parts	C200X100FJJ	C200X100YPT	C200X100FJC	T100X000VPC-BK

EZ-PATH® SERIES 44+ FIRE RATED PATHWAY

APPLICATIONS

EZ-PATH® Series 44+ Fire Rated Pathway is designed for easy installation in floors and walls. Tested and approved cable capacities range from 0 to 100% visual fill. EZ-PATH® Series 44+ Fire Rated Pathway when installed with available single wall plates is designed for new cable installations. In these installations, the device does not require mechanical attachment to either the wall or the wall framing and must be installed after the wallboard has been installed. Split floor plates and multi-gang wall and floor brackets permit installation around previously installed cables if so desired. These installations require mechanical attachment to the barrier. A list of available accessories along with their intended use is shown on page 2 under available components.

EZ-PATH® Series 44+ Fire Rated Pathway Fire Rated Pathway provides exceptional cable capacity. A single unit installed in a wall exceeds the cable carrying capacity of a 6" (152 mm) sleeve utilizing typical putty firestop systems (35% cable loading). Multiple ganged pathways utilizing available wall bracket kits provide additional capacity or segregation of cables by use, type, installer or vendor as desired.

PRODUCT DESCRIPTION

The EZ-PATH® Series 44+ Fire Rated Pathway is a pathway device designed to allow cables to penetrate fire-rated walls and floors without the need for firestopping. This device features a built-in fire and smoke sealing system that automatically adjusts to the amount of cables installed. Once installed in a fire barrier, cables can be easily added or removed at any time without the need to remove or reinstall firestopping materials.

The EZ-PATH® Series 44+ Fire Rated Pathway consists of an enclosed heavy gauge galvanized steel pathway lined with intumescent material engineered for rapid expansion when exposed to fire or high temperatures, quickly sealing the pathway and preventing the passage of flames and smoke. EZ-PATH® Series 44+ Fire Rated Pathway is painted safety orange for easy identification. Its compact square profile allows a maximum number of cables to be installed in a relatively small area. The pathway measures approximately 4" x 4 5/8" and is 14" long (102 x 118 x 356 mm) and can be increased by 6" (152mm) for every Series 44+ Extension module (EZD44ES) installed..

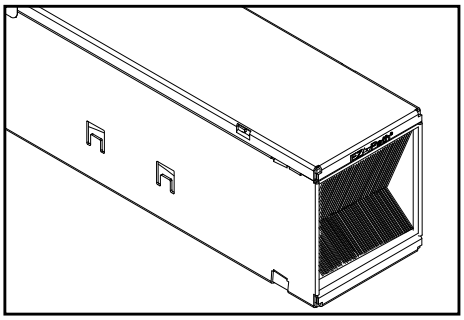

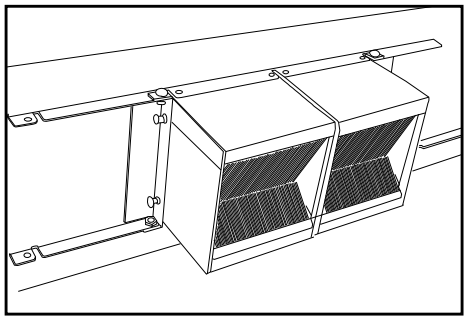

PERFORMANCE

EZ-Path® Series 44+ Fire Rated Pathway is UL Tested and Classified in accordance with ASTM E814 (UL1479) & CAN/ULC-S115. Systems are available for common floor and wall constructions with ratings up to and including 4 hours.

SPECIFICATIONS

All data, video, and communications cable bundles shall utilize an enclosed fire rated pathway device wherever said cables penetrate rated walls and floors. The fire-rated pathway shall contain a built-in fire sealing system sufficient to maintain the hourly fire rating of the barrier being penetrated. The self-contained sealing system shall automatically adjust to the installed cable loading and shall permit cables to be installed, removed, or retrofitted without the need to remove or reinstall firestop materials. The pathway shall be UL Classified and/or FM Systems Approved and tested to the requirements of ASTM E814 (UL1479) & CAN/ULC-S115.

FEATURES & BENEFITS

- Easy to install.
- No firestopping required.
- Firestopped at all stages of use.
- UL Tested - Low Leakage!
- Acoustically Tested
- UL Classified for the complete range of its capacity.
- Interlocking design for easy gang installations.
- Permits cable segregation by use, type, vendor.
- More than TWICE the capacity of Standard EZ-Path 33.

SPECIFIED DIVISIONS

DIV. 7	07 84 00	Penetration Firestopping
DIV. 26	26 00 00	Electrical
DIV. 27	27 00 00	Communications

UL CERTIFIED SAFETY US-CA R14579

FIRESTOP DEVICE CERTIFIED FOR USE IN THROUGH-PENETRATION FIRESTOP SYSTEMS SEE UL ONLINE CERTIFICATIONS DIRECTORY.

INSTALLATION INSTRUCTIONS

EZ-Path® Series 44+ Fire Rated Pathway is designed for use in all common constructions. Single pathways and mounting hardware may be purchased separately or in complete kits. For multi-gang installations, pathways and appropriate mounting hardware must be purchased separately. Single pathways may be installed in either square or round openings. Ganged pathways are designed to be installed in either square or rectangular openings appropriately sized for the number of units desired (See Installation Instructions). In gypsum board walls where pathways are ganged, wall plates must be secured to the wall's internal studs.

Technical Service 1-800-992-1180
www.stifirestop.com

CABLE INSTALLATION

Cables may easily be added or removed at any time without removing or reinstalling the fire seal. Cables may be added individually or in bundles. Wrapping ends with a low-friction tape facilitates cable insertion. Avoid any sharp or exposed conductors that can potentially damage interior pads. A self-adjusting cable throat automatically adjusts to accommodate the cable bundle as it passes through the pathway. Installation of a pulling line will facilitate future cabling additions.

MAINTENANCE

No maintenance of the pathway is normally required.

TECHNICAL SERVICE

Technical information including Product Data Sheets, Installation Instructions, applicable UL Classified Systems, Certificates of Conformance, and suggested specifications are available at the company's web site (www.stifirestop.com). For all other information, contact the manufacturer directly by dialing (800) 992-1180.

PRECAUTIONARY INFORMATION

The use of this device is subject to local, regional and national codes. Consult the local Building Code Official or Authority Having Jurisdiction regarding any regional or local requirements that might influence the selection or use of this product.

AVAILABILITY

See Ordering Information below. EZ-PATH® Fire-Rated Pathway Products are available from designated authorized STI distributors. Consult the factory or visit the web site (www.stifirestop.com) for the names and locations of the nearest sales representatives or distributors.

ORDERING INFORMATION

Catalog Number	Description
EZDP44S2	EZ-Path Series 44+ Fire-Rated Pathway Kit Full Kit with device, wall plates & labels
EZDP144FKS2	EZ-Path Series 44+ Fire-Rated Pathway Floor Kit Full Kit with device, floor plate & labels
EZP144W	One Pair (2) 44 single wall plate pack
EZP544W	EZ-Path Series 44+ 5 gang wall plate brackets
EZP144F	EZ-Path Series 44+ Split floor plate pack
EZD44S2	EZ-Path Series 44+ Device
EZD44ES	EZ-Path Series 44+ Extension Module
EZDG444S2	Single Bank Floor Grid - Four (4) Devices with floor frame
EZDG844S2	Multi-slot Frame Kit for 8 Pathways - (Includes eight (8) Series 44 devices with EZG844)
EZDG1644S2	Multi-slot Frame Kit for 16 Pathways - (Includes sixteen (16) Series 44 devices with EZG1644)
EZG444	Multi-Slot Frame for Four (4) Pathways
EZG444CP	Splice Plate for Floor Grid
EZG844	Multi-Slot Frame for Eight (8) Pathways
EZG1644	Multi-Slot Frame for Sixteen (16) Pathways
EZP144RS	(Retrofit Wall Plate Pack)
EZDP144RS2	(EZ-Path Series 44+ Fire-Rated Pathway Retrofit Kit Full Kit with device, wall plates & labels

PHYSICAL PROPERTIES

Dimensions:	4" w x 4 5/8"H x 14" L (102 x 118 x 356 mm)
Shell Composition:	0.059" (1.5 mm) thick galv. steel
Cable Loading Area:	3 3/8" x 3 3/4" (86 x 95 mm)
Allowable Cable Fill:	0 to 100% visual fill
Fire Ratings:	1, 2, 3 or 4 hours
Expansion Begins:	350°F (177°C)
Volume Expansion:	800%
Sample Cable Volume:	210 (Cat6 0.236" OD)
In-Service Temperature:	Not to exceed 120°F (49°C)
Shelf Life:	No Limit

IMPORTANT NOTICE: All statements, technical information, and recommendations contained herein are based upon testing believed to be reliable, but the accuracy and completeness thereof is not guaranteed.

LIMITED WARRANTY: STI warrants that its products will be free of defects for one year from the date of purchase. In the event a product does not conform to this warranty, the sole and exclusive remedy is, at STI's option, replacement of the product or refund of the purchase price. The warranty provided herein shall be void and of no effect in the event that the product is not installed in accordance with STI's published instructions, listed systems and applicable building and safety codes. THIS WARRANTY IS IN LIEU OF ALL OTHER REPRESENTATIONS AND EXPRESSED OR IMPLIED WARRANTIES (including the implied warranties of merchantability or fitness for a particular use) AND UNDER NO CIRCUMSTANCES SHALL STI BE LIABLE FOR ANY DIRECT, INDIRECT, SPECIAL, INCIDENTAL OR CONSEQUENTIAL DAMAGES OR LOSSES, INCLUDING, WITHOUT LIMITATION, ANY LOSS OF REVENUE, PROFIT OR USE. Prior to use, the user shall determine the suitability of the product for its intended use, and the user assumes all risks and liability for subsequent use. No person other than an officer of STI is authorized to bind STI to any other warranty for any product for which this warranty is issued.

MADE IN THE USA – COPYRIGHT © 2016 SPECIFIED TECHNOLOGIES INC.

Specified Technologies Inc.
THE FIRESTOP AUTHORITY

Specified Technologies Inc. · Somerville NJ 08876 USA · Phone: 800.992.1180 · www.stifirestop.com

EZ-PATH® SERIES 44+ FIRE RATED PATHWAY

APPLICATIONS

EZ-PATH® Series 44+ Fire Rated Pathway is designed for easy installation in floors and walls. Tested and approved cable capacities range from 0 to 100% visual fill. EZ-PATH® Series 44+ Fire Rated Pathway when installed with available single wall plates is designed for new cable installations. In these installations, the device does not require mechanical attachment to either the wall or the wall framing and must be installed after the wallboard has been installed. Split floor plates and multi-gang wall and floor brackets permit installation around previously installed cables if so desired. These installations require mechanical attachment to the barrier. A list of available accessories along with their intended use is shown on page 2 under available components.

EZ-PATH® Series 44+ Fire Rated Pathway Fire Rated Pathway provides exceptional cable capacity. A single unit installed in a wall exceeds the cable carrying capacity of a 6" (152 mm) sleeve utilizing typical putty firestop systems (35% cable loading). Multiple ganged pathways utilizing available wall bracket kits provide additional capacity or segregation of cables by use, type, installer or vendor as desired.

PRODUCT DESCRIPTION

The EZ-PATH® Series 44+ Fire Rated Pathway is a pathway device designed to allow cables to penetrate fire-rated walls and floors without the need for firestopping. This device features a built-in fire and smoke sealing system that automatically adjusts to the amount of cables installed. Once installed in a fire barrier, cables can be easily added or removed at any time without the need to remove or reinstall firestopping materials.

The EZ-PATH® Series 44+ Fire Rated Pathway consists of an enclosed heavy gauge galvanized steel pathway lined with intumescent material engineered for rapid expansion when exposed to fire or high temperatures, quickly sealing the pathway and preventing the passage of flames and smoke. EZ-PATH® Series 44+ Fire Rated Pathway is painted safety orange for easy identification. Its compact square profile allows a maximum number of cables to be installed in a relatively small area. The pathway measures approximately 4" x 4 5/8" and is 14" long (102 x 118 x 356 mm) and can be increased by 6" (152mm) for every Series 44+ Extension module (EZD44ES) installed..

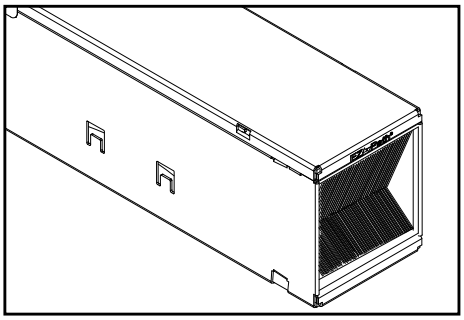

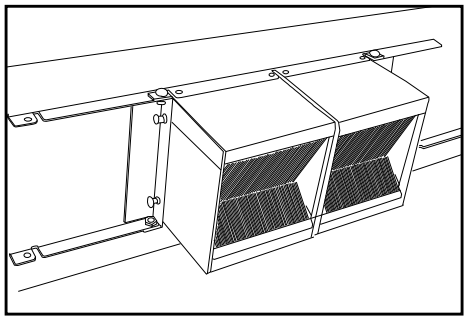

PERFORMANCE

EZ-Path® Series 44+ Fire Rated Pathway is UL Tested and Classified in accordance with ASTM E814 (UL1479) & CAN/ULC-S115. Systems are available for common floor and wall constructions with ratings up to and including 4 hours.

SPECIFICATIONS

All data, video, and communications cable bundles shall utilize an enclosed fire rated pathway device wherever said cables penetrate rated walls and floors. The fire-rated pathway shall contain a built-in fire sealing system sufficient to maintain the hourly fire rating of the barrier being penetrated. The self-contained sealing system shall automatically adjust to the installed cable loading and shall permit cables to be installed, removed, or retrofitted without the need to remove or reinstall firestop materials. The pathway shall be UL Classified and/or FM Systems Approved and tested to the requirements of ASTM E814 (UL1479) & CAN/ULC-S115.

FEATURES & BENEFITS

- Easy to install.
- No firestopping required.
- Firestopped at all stages of use.
- UL Tested - Low Leakage!
- Acoustically Tested
- UL Classified for the complete range of its capacity.
- Interlocking design for easy gang installations.
- Permits cable segregation by use, type, vendor.
- More than TWICE the capacity of Standard EZ-Path 33.

SPECIFIED DIVISIONS

DIV. 7	07 84 00	Penetration Firestopping
DIV. 26	26 00 00	Electrical
DIV. 27	27 00 00	Communications

UL CERTIFIED SAFETY US-CA R14579

FIRESTOP DEVICE CERTIFIED FOR USE IN THROUGH-PENETRATION FIRESTOP SYSTEMS SEE UL ONLINE CERTIFICATIONS DIRECTORY.

INSTALLATION INSTRUCTIONS

EZ-Path® Series 44+ Fire Rated Pathway is designed for use in all common constructions. Single pathways and mounting hardware may be purchased separately or in complete kits. For multi-gang installations, pathways and appropriate mounting hardware must be purchased separately. Single pathways may be installed in either square or round openings. Ganged pathways are designed to be installed in either square or rectangular openings appropriately sized for the number of units desired (See Installation Instructions). In gypsum board walls where pathways are ganged, wall plates must be secured to the wall's internal studs.

Technical Service 1-800-992-1180
www.stifirestop.com

CABLE INSTALLATION

Cables may easily be added or removed at any time without removing or reinstalling the fire seal. Cables may be added individually or in bundles. Wrapping ends with a low-friction tape facilitates cable insertion. Avoid any sharp or exposed conductors that can potentially damage interior pads. A self-adjusting cable throat automatically adjusts to accommodate the cable bundle as it passes through the pathway. Installation of a pulling line will facilitate future cabling additions.

MAINTENANCE

No maintenance of the pathway is normally required.

TECHNICAL SERVICE

Technical information including Product Data Sheets, Installation Instructions, applicable UL Classified Systems, Certificates of Conformance, and suggested specifications are available at the company's web site (www.stifirestop.com). For all other information, contact the manufacturer directly by dialing (800) 992-1180.

PRECAUTIONARY INFORMATION

The use of this device is subject to local, regional and national codes. Consult the local Building Code Official or Authority Having Jurisdiction regarding any regional or local requirements that might influence the selection or use of this product.

AVAILABILITY

See Ordering Information below. EZ-PATH® Fire-Rated Pathway Products are available from designated authorized STI distributors. Consult the factory or visit the web site (www.stifirestop.com) for the names and locations of the nearest sales representatives or distributors.

ORDERING INFORMATION

Catalog Number	Description
EZDP44S2	EZ-Path Series 44+ Fire-Rated Pathway Kit Full Kit with device, wall plates & labels
EZDP144FKS2	EZ-Path Series 44+ Fire-Rated Pathway Floor Kit Full Kit with device, floor plate & labels
EZP144W	One Pair (2) 44 single wall plate pack
EZP544W	EZ-Path Series 44+ 5 gang wall plate brackets
EZP144F	EZ-Path Series 44+ Split floor plate pack
EZD44S2	EZ-Path Series 44+ Device
EZD44ES	EZ-Path Series 44+ Extension Module
EZDG444S2	Single Bank Floor Grid - Four (4) Devices with floor frame
EZDG844S2	Multi-slot Frame Kit for 8 Pathways - (Includes eight (8) Series 44 devices with EZG844)
EZDG1644S2	Multi-slot Frame Kit for 16 Pathways - (Includes sixteen (16) Series 44 devices with EZG1644)
EZG444	Multi-Slot Frame for Four (4) Pathways
EZG444CP	Splice Plate for Floor Grid
EZG844	Multi-Slot Frame for Eight (8) Pathways
EZG1644	Multi-Slot Frame for Sixteen (16) Pathways
EZP144RS	(Retrofit Wall Plate Pack)
EZDP144RS2	(EZ-Path Series 44+ Fire-Rated Pathway Retrofit Kit Full Kit with device, wall plates & labels

PHYSICAL PROPERTIES

Dimensions:	4" w x 4 5/8"H x 14" L (102 x 118 x 356 mm)
Shell Composition:	0.059" (1.5 mm) thick galv. steel
Cable Loading Area:	3 3/8" x 3 3/4" (86 x 95 mm)
Allowable Cable Fill:	0 to 100% visual fill
Fire Ratings:	1, 2, 3 or 4 hours
Expansion Begins:	350°F (177°C)
Volume Expansion:	800%
Sample Cable Volume:	210 (Cat6 0.236" OD)
In-Service Temperature:	Not to exceed 120°F (49°C)
Shelf Life:	No Limit

IMPORTANT NOTICE: All statements, technical information, and recommendations contained herein are based upon testing believed to be reliable, but the accuracy and completeness thereof is not guaranteed.

LIMITED WARRANTY: STI warrants that its products will be free of defects for one year from the date of purchase. In the event a product does not conform to this warranty, the sole and exclusive remedy is, at STI's option, replacement of the product or refund of the purchase price. The warranty provided herein shall be void and of no effect in the event that the product is not installed in accordance with STI's published instructions, listed systems and applicable building and safety codes. THIS WARRANTY IS IN LIEU OF ALL OTHER REPRESENTATIONS AND EXPRESSED OR IMPLIED WARRANTIES (including the implied warranties of merchantability or fitness for a particular use) AND UNDER NO CIRCUMSTANCES SHALL STI BE LIABLE FOR ANY DIRECT, INDIRECT, SPECIAL, INCIDENTAL OR CONSEQUENTIAL DAMAGES OR LOSSES, INCLUDING, WITHOUT LIMITATION, ANY LOSS OF REVENUE, PROFIT OR USE. Prior to use, the user shall determine the suitability of the product for its intended use, and the user assumes all risks and liability for subsequent use. No person other than an officer of STI is authorized to bind STI to any other warranty for any product for which this warranty is issued.

MADE IN THE USA – COPYRIGHT © 2016 SPECIFIED TECHNOLOGIES INC.

Specified Technologies Inc.
THE FIRESTOP AUTHORITY

Specified Technologies Inc. · Somerville NJ 08876 USA · Phone: 800.992.1180 · www.stifirestop.com

UNIVERSAL RACK

KEY FEATURES

- Supports 19" rack-mount equipment designed for two-post panel mounting like patch panels and network switches or use with shelves to support computer servers.
- Easy positioning of equipment or shelves with marked and numbered rack-mount spaces.
- Quick attachment of equipment with threaded equipment mounting holes and included equipment-mounting screws.
- Delivers unassembled in a single carton — quick and easy bolt-together assembly takes less than 10 minutes.
- Lightweight aluminum construction for easy transport and positioning during installation.
- Integrated grounding with a built-in attachment point for a ground (earthing) connection.
- Attach CPI vertical cable managers to the side of the rack through pre-punched holes.
- Secure the rack to the floor quickly with a concrete, wood or raised floor installation kit through pre-punched holes in base angle.

APPLICATIONS

- Use with vertical and horizontal cable managers to support interconnect and network equipment in telecommunications rooms, equipment rooms and data centers.
- Use with shelves to support equipment.

USE WITH

- Motive™ Cable Management
- Evolution® Cable Management
- Velocity® Cable Management
- Rack and Frame Installation Kit
- Raised Floor Rack Support For 3" Channel

RELATED ACCESSORIES

- 3" Channel Rack-To-Runway Mounting Plate
- Vertical PDUs for Racks
- Rack Shelves

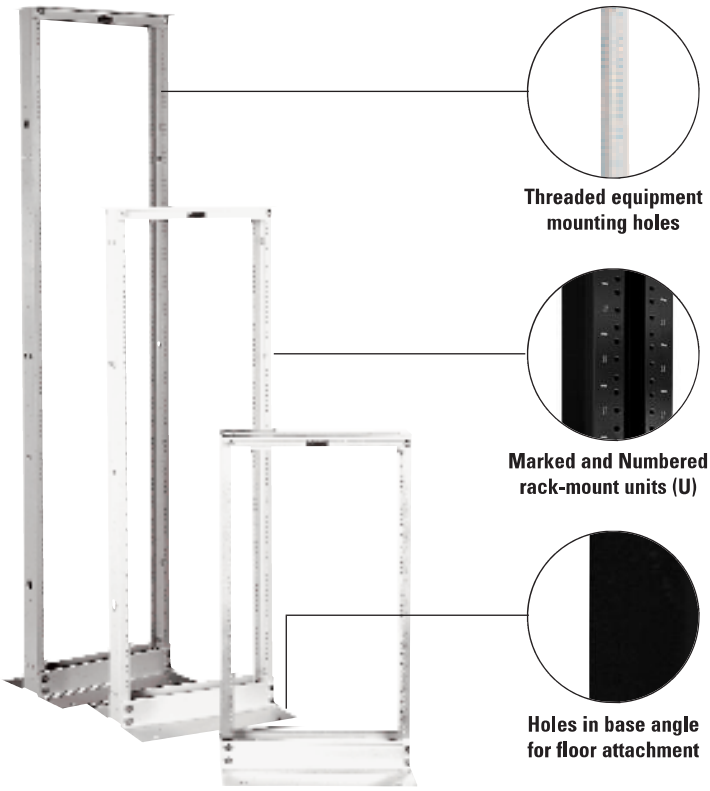

California OSHPD OPM-0112-13

Universal Rack is a heavy duty storage solution for patch panels and network switches and can be used with shelves to hold computer servers. Universal Rack uses less floor space than a cabinet or a four-post rack. Use Universal Rack in telecommunications rooms or equipment rooms to save floor space and hold heavy equipment.

Universal Rack meets project specifications. Universal Rack holds 1,500 lb (680.4 kg) of equipment, has integrated gounding and is available UL and cUL Listed as a communications circuit accessory. Universal Rack supports 19", 23" or 35" wide rack-mount equipment and shelves and is available in several heights. Equipment attaches to the front or rear of the 3"D (76 mm) vertical mounting channels with screws. Equipment mounting positions are marked and numbered making it easy to position and install equipment or shelves.

Racks deliver unassembled in a compact carton. Universal Rack is easy to assemble. Components bolt together with included hardware. Assembly holes in the rack uprights are threaded. Assembly takes approximately 10 minutes. Two-post racks must be secured to building structure. Universal Rack has pre-punched base angles making it easy to attach the rack to the floor. Use a CPI installation kit for wood, slab or raised floors.

Most Universal Rack applications require cable management. Vertical cable managers attach directly to the side of Universal Rack. CPI cable managers organize cables by-rack-mount-space simplifying future moves, adds and changes to the network. The best solution includes horizontal managers in between patch panels and network switches to fan patch cords into individual port connections.

See reverse for product selection. Contact CPI Technical Support for configuration assistance.

US & Canada
+1-800-834-4969
Toronto, Ontario, Canada
+905-850-7770
chatsworth.com

Latin America
+52-55-5203-7525
Toll Free within Mexico
01-800-01-7592
chatsworth.com.co

Europe
+44-1628-524-834
chatsworth.com

Middle East & Africa
Dubai, UAE
+971-4-2602125
chatsworth.ae

Asia Pacific
+86 21 6880-0266
chatsworth.com.cn

techsupport@chatsworth.com

CHATSWORTH PRODUCTS

PatchRunner™ Vertical Cable Managers

PANDUIT®

SPECIFICATION SHEET

specifications

The vertical cable manager shall consist of a metal backbone with cable management fingers that align with EIA rack spacing. The fingers shall be molded out of plastic and provide integral bend radius control throughout the entire length. The backbone shall have pass through holes with rolled edges that provide bend radius control. The manager shall accept a metal, hinged door that can open to the right or left. The manager shall accept plastic slack management spools that can be repositioned as required. The vertical panel shall be able to manage all the cable on the rack without the aid of horizontal cable managers.

technical information

6.5 Foot Managers and Doors						7 Foot Managers and Doors						8 Foot Managers and Doors					
Part Number	RU	Height in (mm)	Width in (mm)	Depth in (mm)		Part Number	RU	Height in (mm)	Width in (mm)	Depth in (mm)		Part Number	RU	Height in (mm)	Width in (mm)	Depth in (mm)	
PRV679	42	78.9 (2004)	6.0 (152)	16.4 (417)	Dual Sided Vertical Managers	PRV6	45	83.9 (2131)	6.0 (152)	16.4 (417)	Dual Sided Vertical Managers	PRV696	52	95.5 (2426)	6.0 (152)	16.4 (417)	
						PRV8	45	83.9 (2131)	8.0 (203)	16.4 (417)		PRV896	52	95.5 (2426)	8.0 (203)	16.4 (417)	
						PRV10	45	83.9 (2131)	10.0 (253)	16.4 (417)		PRV1096	52	95.5 (2426)	10.0 (253)	16.4 (417)	
PRV1279	42	78.9 (2004)	12.0 (305)	16.4 (417)		PRV12	45	83.9 (2131)	12.0 (305)	16.4 (417)		PRV1296	52	95.5 (2426)	12.0 (305)	16.4 (417)	
						PRV15	45	83.9 (2131)	15.0 (381)	16.4 (417)		PRV1596	52	95.5 (2426)	15.0 (381)	16.4 (417)	
PRVF679	42	78.9 (2004)	6.0 (152)	9.7 (246)	Single Sided Vertical Managers	PRVF6	45	83.9 (2131)	6.0 (152)	9.7 (246)	Single Sided Vertical Managers	PRVF696	52	95.5 (2426)	6.0 (152)	9.7 (246)	
						PRVF8	45	83.9 (2131)	8.0 (203)	9.7 (246)		PRVF896	52	95.5 (2426)	8.0 (203)	9.7 (246)	
						PRVF10	45	83.9 (2131)	10.0 (253)	9.7 (246)		PRVF1096	52	95.5 (2426)	10.0 (253)	9.7 (246)	
PRVF1279	42	78.9 (2004)	12.0 (305)	9.7 (246)		PRVF12	45	83.9 (2131)	12.0 (305)	9.7 (246)		PRVF1296	52	95.5 (2426)	12.0 (305)	9.7 (246)	
						PRVF15	45	83.9 (2131)	15.0 (381)	9.7 (246)		PRVF1596	52	95.5 (2426)	15.0 (381)	9.7 (246)	
PRD679	42	77.8 (1977)	6.1 (155)	1.6 (40)	Dual Hinged Metal Doors	PRD6	45	82.8 (2104)	6.1 (155)	1.6 (40)	Dual Hinged Metal Doors	PRD696	52	94.4 (2399)	6.1 (155)	1.6 (40)	
						PRD8	45	82.8 (2104)	8.1 (206)	1.6 (40)		PRD896	52	94.4 (2399)	8.1 (206)	1.6 (40)	
						PRD10	45	82.8 (2104)	10.1 (257)	1.6 (40)		PRD1096	52	94.4 (2399)	10.1 (257)	1.6 (40)	
PRD1279	42	77.8 (1977)	12.1 (308)	1.6 (40)		PRD12	45	82.8 (2104)	12.1 (308)	1.6 (40)		PRD1296	52	94.4 (2399)	12.1 (308)	1.6 (40)	
						PRD15	45	82.8 (2104)	15.1 (384)	1.6 (40)		PRD1596	52	94.4 (2399)	15.1 (384)	1.6 (40)	

key features and benefits

High-density	Minimizes area required for network layout, freeing up valuablefloor space
Curved fingers	Support cables as they transition to the vertical pathway eliminating the need for horizontal managers
Individual fingers	Aligns with rack spaces to simplify cable routing for moves, adds,and changes
Integral bend radius control	Maintains cable bend radius ensuring network performance and system reliability
Slack management spools	Organize and manage patch cord slack allowing for standardization of patch cord lengths
Dual hinged door	Opens to the left or right to allow easy access to vertical pathway without having to completely remove door
Snap-on vertical retainers	Can be placed on fingers to help retain cables in channel for improved cable management and appearance

applications

PatchRunner™ Vertical Cable Managers are designed to manage high-density networking equipment in, up to, half the area required by traditional cable management systems. Molded cable management fingers, with integral bend radius control, combine with Panduit angled patch panels to eliminate the need for horizontal cable managers. This frees up rack space for additional patch panels, active equipment, or cable pathways reducing the number of racks that may be required for the network layout. The reduction in square footage combined with fewer components ordered, inventoried and installed results in significant cost savings for the network infrastructure. When used with Panduit connectivity, patch cords, and racks, the user receives a complete cable management solution that maximizes density while minimizing the area required for their network.

Vertical Cable Managers – 6.5 Foot

Dual-sided:	
6" wide:	PRV679
12" wide:	PRV1279
Single-sided:	
6" wide:	PRVF679
12" wide:	PRVF1279

Dual Hinged Doors – 6.5 Foot

6" wide:	PRD679
12" wide:	PRD1279

Standard EIA Racks – 6.5 Foot

2 post rack:	R2P79
4 post rack:	R4P79
4 post rack:	R4PCN79

Vertical Cable Managers – 7 Foot

Dual-sided	
6" wide:	PRV6*
8" wide:	PRV8*
10" wide:	PRV10*
12" wide:	PRV12*
15" wide:	PRV15*
Single-sided	
6" wide:	PRVF6*
8" wide:	PRVF8*
10" wide:	PRVF10*
12" wide:	PRVF12*
15" wide:	PRVF15*

Dual Hinged Doors – 7 Foot

6" wide:	PRD6
8" wide:	PRD8
10" wide:	PRD10
12" wide:	PRD12
15" wide:	PRD15

Enhanced Dual Hinged Doors – 7 Foot

6" wide:	PED6B1
8" wide:	PED8B1
10" wide:	PED10B1
12" wide:	PED12B1

Standard EIA Racks – 7 Foot

19" wide #12-24 threaded rail:	R2P*
23" wide #12-24 threaded rail:	R2PW
19" wide #12-24 threaded rail:	R2P6S*

NetManager® Horizontal Cable Managers

2 RU manager front only:	NMF2
3 RU manager front only:	NMF3
4 RU manager front only:	NMF4

Horizontal Managers for Pathways

Cable routing trough:	CMT4
	CMLT19
	CMUT19

Accessories

7" front slack management spool:	PRSP7
5" rear slack management spool:	PRSP5
End panel:	PREP*B1
Cable retainer:	WR5E-X

* For part numbers 8 feet tall, add "96" to end of part number. Ex: PRV696 or PRVF696

PatchRunner™ Vertical Cable Managers

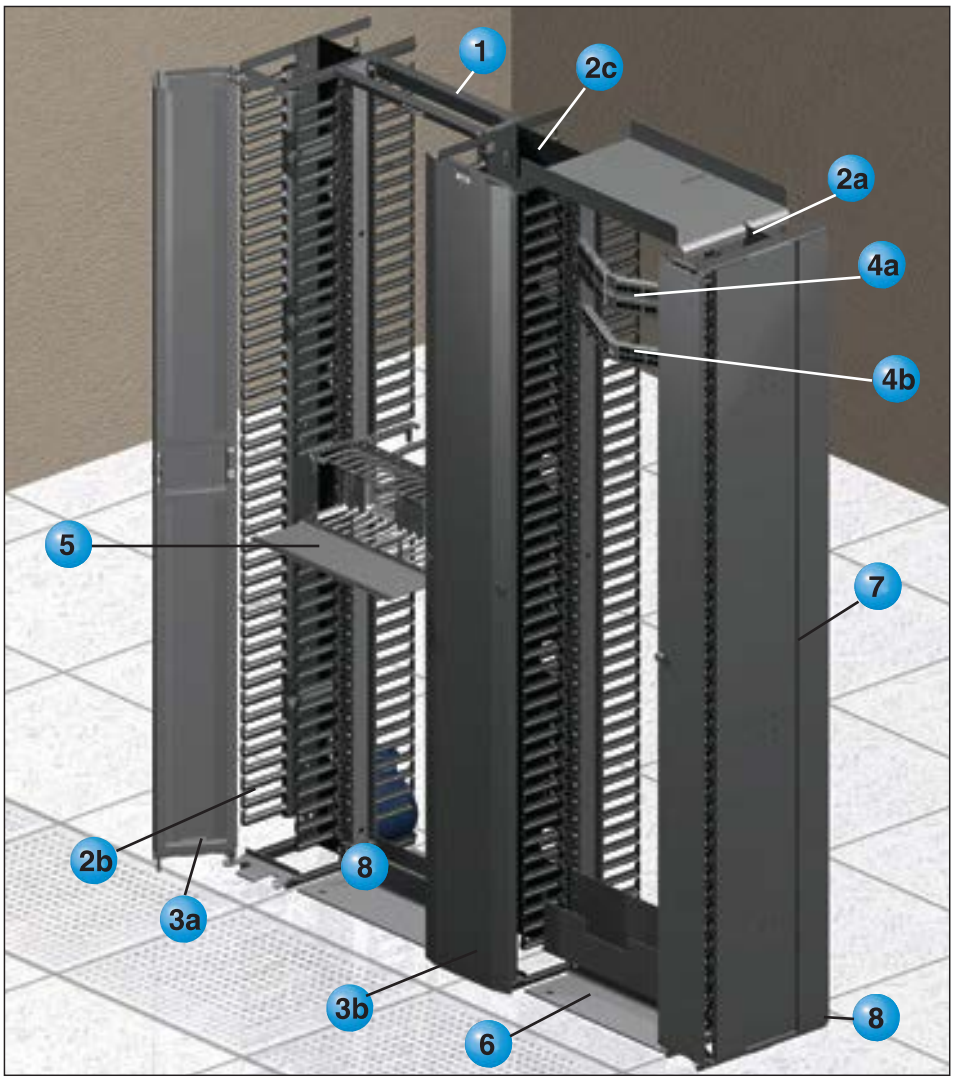

1 R2P – 19" Standard EIA Rack 19" x 7', 45 RU

PATCHRUNNER™ VERTICAL MANAGERS

2a PRV6 – 6" wide

2b PRV8 – 8" wide

2c PRV12 – 12" wide

HINGED DOORS

3a PRD8 – Dual Hinge, 8" wide

3b PED12B1 – Dual Hinge, 12" wide

ANGLED MODULAR PATCH PANELS

4a CPPLA48WBLY – 2 RU, 48-Port

4b CPPA48HDWBLY – 1 RU, High Density 48-Port

5 NM4 – Cable Pathway, 4 RU

6 CMT4 – Trough, 4 RU

7 PREPB1 – End Panel

8 RFG6X8 – Cool Boot™ Raised Floor Air Sealing Grommet

cable capacity chart

Part Number	Front Channel w/ Spool					Front Channel No Spool					Rear Channel				
	Channel Area (in²)	Cat. 6A (28AWG - 0.185")	Cat. 6A (24AWG - 0.275")	Cat. 6 (28AWG - 0.150")	Cat. 6 (24AWG - 0.235")	Channel Area (in²)	Cat. 6A (28AWG - 0.185")	Cat. 6A (24AWG - 0.275")	Cat. 6 (28AWG - 0.150")	Cat. 6 (24AWG - 0.235")	Channel Area (in²)	Cat. 6A (28AWG - 0.185")	Cat. 6A (24AWG - 0.275")	Cat. 6 (28AWG - 0.150")	Cat. 6 (24AWG - 0.235")
PRV6* (dual sided)	28.2	419	190	638	260	37.8	562	254	855	348	27.6	410	185	624	254
PRVF6* (single sided)											-	-	-	-	-
PRV8* (dual sided)	44.7	664	300	1011	412	54.3	808	365	1229	500	39	580	262	882	359
PRVF8* (single sided)											-	-	-	-	-
PRV10* (dual sided)	61.1	909	411	1383	563	70.7	1052	476	1600	652	50.3	748	338	1138	463
PRVF10* (single sided)											-	-	-	-	-
PRV12* (dual sided)	77.6	1154	522	1756	715	87.2	1297	587	1973	804	61.7	918	415	1396	569
PRVF12* (single sided)											-	-	-	-	-
PRV15* (dual sided)	102.3	1522	688	2315	943	111.9	1665	753	2532	1031	78.7	1171	530	1781	725
PRVF15* (single sided)											-	-	-	-	-
Single PRV Finger	4.6	85	38	130	53										

Capacities are based on a fill rate of 40% to accommodate proper cable routing techniques.
The above cable diameters represent the nominal Panduit cable diameter per performance level.
*For part numbers that are 8 foot tall, add "96" to the end of the part number.

WORLDWIDE SUBSIDIARIES AND SALES OFFICES

PANDUIT CANADA
Markham, Ontario
cs-cdn@panduit.com
Phone: 800.777.3300

PANDUIT EUROPE LTD.
London, UK
cs-emea@panduit.com
Phone: 44.20.8601.7200

PANDUIT SINGAPORE PTE. LTD.
Republic of Singapore
cs-ap@panduit.com
Phone: 65.6305.7575

PANDUIT JAPAN
Tokyo, Japan
cs-japan@panduit.com
Phone: 81.3.6863.6000

PANDUIT LATIN AMERICA
Guadalajara, Mexico
cs-la@panduit.com
Phone: 52.33.3777.6000

PANDUIT AUSTRALIA PTY. LTD.
Victoria, Australia
cs-aus@panduit.com
Phone: 61.3.9794.9020

For a copy of Panduit product warranties, log on to www.panduit.com/warranty

For more information

Visit us at www.panduit.com

Contact Customer Service by email: cs@panduit.com or by phone: 800.777.3300

©2016 Panduit Corp.
ALL RIGHTS RESERVED.

RKSP144--WW-ENG
Replaces WW-RKSP12
2016-11-28

SPECIFICATIONS

- Open floor-mount two-post rack supports 19"W EIA, 23"W or 35"W rack-mount equipment
- For indoor use only, in environmentally controlled areas; may not be used outdoors, in industrial or harsh environments, or in plenum spaces
- Available sizes:
  - Heights: See Dimension Table
  - Width: 20.3" (515.9 mm), 24.3" (617.5 mm), 26.3" (922.3 mm)
  - Depth: 15" (381 mm)
- Equipment space:
  - Heights: See Dimension Table
  - Width: 19" EIA (17-3/4" clearance), 23" (21-3/4" clearance), 35" (33-3/4" clearance)
  - Depth: 20"D (508 mm)

  Note: Double-sided shelves for 26"D (660.4 mm) equipment are available. Use QuadraRack® 4-Post Frame when rack-mount equipment exceeds 20"D.
- Equipment Support:
  - 1 pair C-shaped equipment mounting channels
  - 19"W, 23"W or 35"W
  - EIA-310-D compliant, Universal hole pattern
  - 5/8"-5/8"-1/2" vertical hole spacing
  - Threaded #12-24 equipment mounting holes (50) #12-24 Screws included
  - Fixed in place
- Cable Management
  Use vertical and horizontal cable managers, sold as accessories
- Load capacity:
  1,500 lb (680.4 kg) of equipment
- Grounding/Bonding
  - Top angles, base angles and side channels are electrically bonded by assembly hardware
  - One exception - top angles are not electrically bonded on Flush Bolted Racks (P/N 467XX)
  - A masked mounting location for ground lug with two 1/4-20 threaded studs spaced 5/8" apart is provided inside the side channel
  - Racks that are over 6'H (1.8 m) have top and bottom mounting locations
  - Use the CPI Grounding Jumper (P/N 40159-008) as a rack bonding conductor
- Certifications:
  - EIA-310-D compliant
  - Select models are UL Listed as a communications circuit accessory
  - OSHPD OPM-0261-13, Preapproval of Manufacturer's Certification (OPM)
- Material:
  Aluminum extrusion
- Construction:
  Bolted assembly, Ships unassembled
- Finish:
  Clear grained aluminum or Epoxy-polyester hybrid powder coat paint. Available in black, gray, computer beige or glacier white.

DIMENSIONS

Height ft (m)	U
3 (0.9)	17
4 (1.2)	24
5 (1.5)	31
5.5 (1.7)	34
6 (1.8)	38
6.5 (2.0)	41
7 (2.1)	45
7.5 (2.3)	48
8 (2.4)	51
8.5 (2.6)	55
9 (2.7)	58

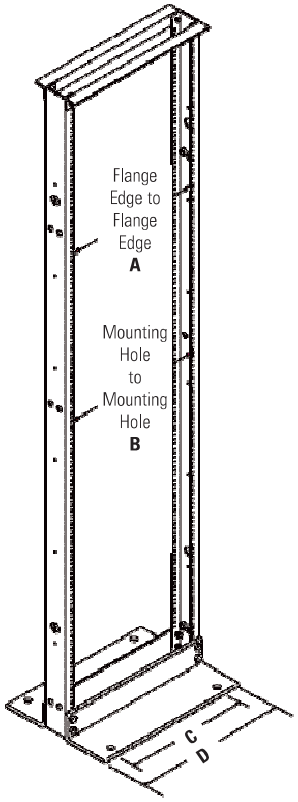

Dimension	19" EIA Rack in (mm)	23" EIA Rack in (mm)
A	17.75 (450.9)	21.75 (552.5)
B	18.31 (465.1)	22.31 (566.7)
C	16 (410.0)	20 (510.0)
D	20.31 (515.9)	24.31 (617.5)

ORDERING INFORMATION

The part numbers listed below are the most popular styles. There are two other top bar/angle styles that are not shown in the tables below:

19"W Universal Rack			
Part Number		Description	Shipping Weight
19"W EIA	UL Listed		
46353-X31	48353-X31	36"H x 19"W, 17U	25 (11.3)
46353-X20	48353-X20	48"H x 19"W , 24U	28 (12.7)
46353-X19	48353-X19	60"H x 19"W, 31U	35 (15.9)
46353-X00	48353-X00	66"H x 19"W, 34U	36 (16.3)
46353-X01	48353-X01	72"H x 19"W, 38U	37 (16.8)
46353-X02	48353-X02	78"H x 19"W, 41U	38 (17.2)
46353-X03	48353-X03	84"H x 19"W, 45U	39 (17.7)
46353-X05	48353-X05	90"H x 19"W, 48U	40 (18.1)
46353-X15	48353-X15	96"H x 19"W, 51U	41 (18.6)
46353-X17	48353-X17	102"H x 19"W, 55U	41 (18.6)
46353-X08	48353-X08	108"H x 19"W, 58U	43 (19.5)

X=color: 1=Gray, 2=Computer Beige, 5=Clear, 7=Black, E=Glacier White. Also available with flat top bars (P/N 460XX) or flush bolted top angles (P/N 467XX).

23"W Universal Rack			
Part Number		Description	Shipping Weight
23"W	UL Listed		
46383-X31	48383-X31	36"H x 23"W, 17U	26 (11.8)
46383-X20	48383-X20	48"H x 23"W, 24U	29 (13.2)
46383-X19	48383-X19	60"H x 23"W, 31U	36 (16.3)
46383-X00	48383-X00	66"H x 23"W, 34U	39 (17.6)
46383-X01	48383-X01	72"H x 23"W, 38U	40 (18.1)
46383-X02	48383-X02	78"H x 23"W, 41U	41 (18.6)
46383-X03	48383-X03	84"H x 23"W, 45U	42 (19.1)
46383-X05	48383-X05	90"H x 23"W, 48U	43 (19.5)
46383-X15	48383-X15	96"H x 23"W, 51U	44 (20)
46383-X17	48383-X17	102"H x 23"W, 55U	45 (20.4)
46383-X08	48383-X08	108"H x 23"W, 58U	46 (20.9)

X=color: 1=Gray, 2=Computer Beige, 5=Clear, 7=Black, E=Glacier White. Also available with flat top bars (P/N 460XX) or flush bolted top angles (P/N 467XX).

35"W Universal Rack			
Part Number		Description	Shipping Weight lb (kg)
35"W	UL Listed		
46363-X01	N/A	72"H x 35"W, 38U	49 (22.2)
46363-X03	N/A	84"H x 35"W, 45U	51(23.1)

X=color: 1=Gray, 2=Computer Beige, 5=Clear, 7=Black, E=Glacier White. Also available with flush bolted top angles (P/N 467XX). There are no shelves for 35"W Universal Racks. Use with block-mounting brackets.

CHATSWORTH PRODUCTS

While every effort has been made to ensure the accuracy of all information, CPI does not accept liability for any errors or omissions and reserves the right to change information and descriptions of listed services and products.
©2016 Chatsworth Products, Inc. All rights reserved. Chatsworth Products, CPI, CPI Passive Cooling, eConnect, MegaFrame, Saf-T-Grip, Seismic Frame, SlimFrame, TeraFrame, GlobalFrame, CUBE-iT PLUS, Evolution, OnTrac, QuadraRack and Velocity are federally registered trademarks of Chatsworth Products. Simply Efficient, Secure Array and Clik-Nut are trademarks of Chatsworth Products. All other trademarks belong to their respective companies. Rev.8 09/17 MKT-60020-314

ENHANCED CABLE MANAGEMEMENT FOR CPI CABINETS

KEY FEATURES

- Cable openings in Enhanced Vertical Manager allow cables to exit by RMU. Openings have rounded edges to protect cable and will not deform or break.
- The back side of the Enhanced Vertical Manager has four edge-protected cable pass-through ports for front-to-back cabling.
- Cover snaps on and opens to the right or left for easy access to cables during moves, adds and changes.
- Front-to-Back Managers adjust in depth to connect the front and rear Enhanced Vertical Manager.

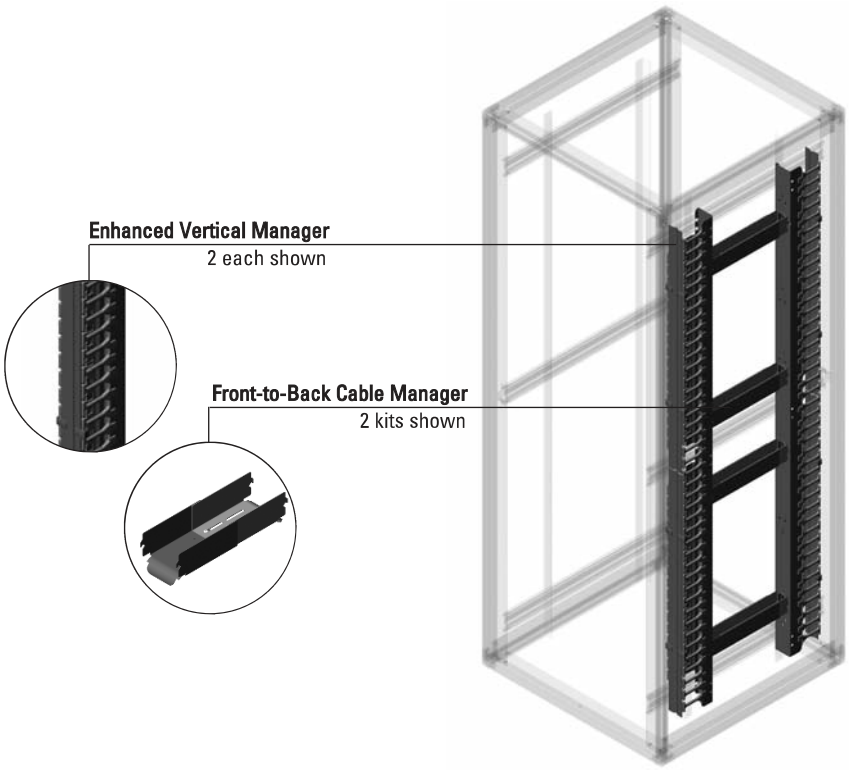

APPLICATIONS

- Enhanced Vertical and Front-to-Back Cable Managers provide physical protection and support for patch and equipment cords within CPI M-Series MegaFrame Cabinets.
- Use Enhanced Vertical and Front-to-Back Cable Managers in CPI MegaFrame Cabinets used in Data Centers of large enterprise networks when cabinets support network, fiber and/or computer and data storage equipment.

RELATED ACCESSORIES

- M-Series MegaFrame Cabinet System
- 23"-19" Rail Adapter Kit
- Fiber Management Spools
- Horizontal Cable Tray
- Universal Horizontal Cable Managers
- Double-Sided Universal Horizontal Cable Managers
- Saf-T-Grip® Reusable Cable Management Straps

Enhanced Vertical and Front-to-Back Managers are accessories for the CPI M-Series MegaFrame® Cabinet System. MegaFrame Cabinet features integrated cable management space along both sides of the cabinet frame. Cable managers used within this space can be adjusted in depth (front-to-rear) to align cables with equipment.

Enhanced Vertical Manager allows cables to be organized by rack-mount space, making it easier to trace individual cables during moves, adds and changes. Additionally, two Enhanced Vertical Managers can be connected with Front-to-Back Managers (as shown above) to create a complete pathway for patch cords that connect network switches and computers within the same or adjacent cabinets.

Enhanced Vertical Manager is available in two sizes for large and extra-large cable capacities. The narrow version can be added to any MegaFrame Cabinet. The wide version is used in any 23" wide MegaFrame Cabinet that has been converted into a 19" rack solution with CPI's 23"-19" Rail Adapter Kit. Both models include a snap-on door to protect cables. The matching Front-to-Back Managers (sold in pairs) snap onto the vertical managers and adjust to match the depth of the cable managers.

See reverse for product selection. Contact CPI Technical Support for configuration assistance.

CHATSWORTH PRODUCTS, INC.

800-834-4969
techsupport@chatsworth.com
www.chatsworth.com

SPECIFICATIONS

Enhanced Vertical Manager

- Single-sided trough
- 1 RMU high cable openings
- Edge-protected cable ports
- Slots for cable straps
- Snap-on cover

- **Two sizes:**
  Narrow for all MegaFrame Cabinets
  Wide for the 23"W MegaFrame Cabinet with 23"-19" Rail Adapter Kit

- **Cable capacities:**
  See the cable fill table at
  www.chatsworth.com/cablefill

- **Size:**
  Narrow - 3.50"W x 5.23"D
  Wide - 4.75"W x 8.77"D

- **Heights:**
  7' (68.50"), 6'-6" (62.96"), 6' (56.50")

- **Materials:**
  Aluminum sheet
  UL 94V-0 composite

- **Finish:**
  Black

Front-to-Back Cable Manager

- Telescoping trough
- Sold in pairs

- **Two Sizes:**
  Narrow - use with P/N 13171-70X in 30", 36", or 39"D Cabinets
  Wide - use with P/N 13170-70X in 36" or 39"D Cabinets

- **Cable capacities:**
  See the cable fill table at
  www.chatsworth.com/cablefill

- **Size:**
  Narrow - 1.74"W x 2.38"H
  Wide - 3.77"W x 2.38"H

- **Depth (Adjustable):**
  Narrow - 12.30" to 22.25"
  Wide - 8" to 12"

- **Material:**
  Aluminum sheet

- **Finish:**
  Black

DIMENSIONS

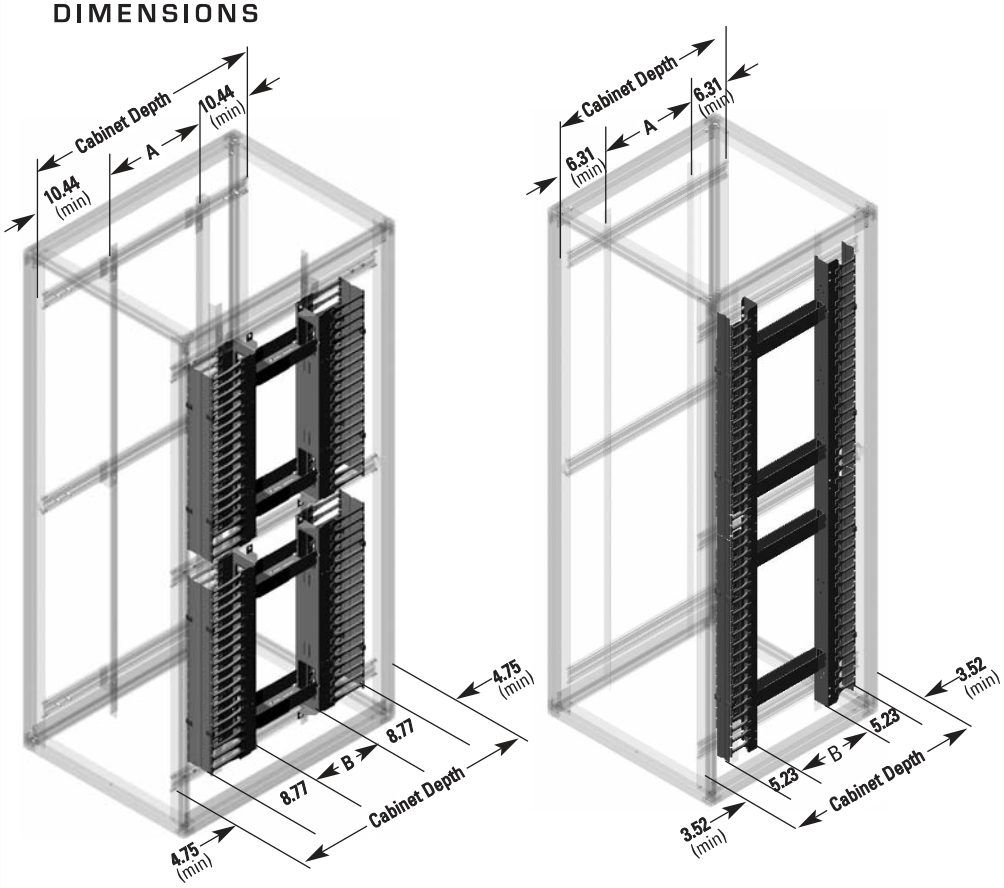

Wide Enhanced Vertical & Front-to-Back *CPI P/N 13170-70X & 13168-701*			
Cabinet Depth	Rail-to-Rail	Back-to-Back	
	A	B (Max)	B (Min)
30"	3.20	3.20	-
36"	9.00	9.00	8.00
39"	12.00	12.00	8.00

Wide Enhanced Vertical & Front-to-Back *CPI P/N 13171-70X & 13169-701*			
Cabinet Depth	Rail-to-Rail	Back-to-Back	
	A	B (Max)	B (Min)
30"	17.38	13.25	12.30
36"	23.38	19.25	12.30
39"	26.38	22.25	12.30

Notes: *Dimensions are in inches. Wide Front-to-Back Manager cannot be used in 30"D Cabinet.*

ORDERING INFORMATION

Narrow Enhanced Vertical & Front-to-Back Cable Managers *For 19" or 23" Wide MegaFrame Cabinets*			
Part Number	Description	Color	Shipping Weight
13171-702	Enhanced Vertical Manager, 6' High Cabinets	Black	9 lb
13171-701	Enhanced Vertical Manager, 6'-6" High Cabinets	Black	10 lb
13171-700	Enhanced Vertical Manager, 7' High Cabinets	Black	11 lb
13169-701	Front-to-Back Management Tray, 2 each	Black	3 lb

Wide Enhanced Vertical & Front-to-Back Cable Managers *For 23" Wide MegaFrame Cabinets converted to 19" rack-mount*			
Part Number	Description	Color	Shipping Weight
13170-702	Enhanced Vertical Manager, 6' High Cabinets	Black	11 lb
13170-701	Enhanced Vertical Manager, 6'-6" High Cabinets	Black	12 lb
13170-700	Enhanced Vertical Manager, 7' High Cabinets	Black	13 lb
13168-701	Front-to-Back Management Tray, 2 each	Black	2 lb

CHATSWORTH PRODUCTS, INC.

©2008 Chatsworth Products, Inc. All rights reserved. CPI, Saf-T-Grip, Seismic Frame, SlimFrame and MegaFrame are federally registered trademarks of Chatsworth Products, Inc. CPI Passive Cooling, Cube-iT Plus, TeraFrame, Thinline II and QuadraRack are trademarks of Chatsworth Products, Inc. All other trademarks belong to their respective companies.. MKT-60020-235 Rev.3 04/08

Product Cut Sheet

ELECTRONIC LOCK KIT, SYSTEM 1000

Each lock can be programmed with multiple access codes eliminating keys and allowing a master code to open all cabinets, while different user codes open individual cabinets or groups of cabinets.

Key Features:

- Standalone electronic keypad lock (not networked, no audit trail)
- Three user levels with programmable access codes:
  - 8-digit Master code – full administrative rights
  - 8-digit Sub-Master code – set/delete user code
  - 4-digit User code
- 3 Access codes: 1 Master code, 1 Sub-Master code, 1 User code per lock
- Approximately 15,000 openings per battery change
- Low Battery warning LED
- External battery override with 9 VDC battery
- Powered by 2 x 1.5 VDC AAA batteries

Specifications:

- Includes: Lock handle, door mounting plate and hardware
- Material: zinc-alloy handle, steel mounting plate
- Finish: Silver-colored handle, black mounting plate

Ordering:

- Select part number to match the cabinet, door style and type of latch.
- Use retrofit kits to replace existing handles.

Electronic Lock Kit, System 1000 For F-Series TeraFrame Gen 3 Cabinet System					
Part Number – Door/Style			Latch Type	Door Height (U)	Shipping Weight lb (kg)
Front Door Single, Perf.	Rear Door, Single, Solid	Rear Door, Double, Perf.			
39222-C00	39223-C00	N/A	Single-Point	All	3 (1.4)
39226-C00	39227-C00	39225-C00	Two-Point	42	5 (2.3)
39226-C01	39227-C01	39225-C01	Two-Point	43	5 (2.3)
39226-C02	39227-C02	39225-C02	Two-Point	44	5 (2.3)
39226-C03	39227-C03	39225-C03	Two-Point	45	5 (2.3)
39226-C04	39227-C04	39225-C04	Two-Point	46	5 (2.3)
39226-C05	39227-C05	39225-C05	Two-Point	47	5 (2.3)
39226-C06	39227-C06	39225-C06	Two-Point	48	6 (2.7)
39226-C07	39227-C07	39225-C07	Two-Point	49	6 (2.7)
39226-C08	39227-C08	39225-C08	Two-Point	50	6 (2.7)
39226-C09	39227-C09	39225-C09	Two-Point	51	6 (2.7)
39226-C10	39227-C10	39225-C10	Two-Point	52	6 (2.7)
Retrofit Kits					
39222-C00	39223-C00	N/A	Single-Point	Any	3 (1.4)
39226-C99	39227-C99	39225-C99	Two-Point	Any	3 (1.4)

Note: Electronic Lock Kit includes a door latch and mounting hardware. Order the door separately. Use retrofit electronic lock kits to replace an existing swing handle on the cabinet door. Use the kits listed at the top of the order matrix with new doors. To order the lock kit pre-installed on the F-Series TeraFrame Gen 3 Cabinet door, use the CPI Product Configurator on the CPI website.

Electronic Lock Kit, System 1000 For GF-Series GlobalFrame Gen 2 Cabinet System					
Part Number – Door/Style			Latch Type	Door Height (U)	Shipping Weight lb (kg)
Front Door Single, Perf.	Rear Door, Single, Solid	Rear Door, Double, Perf.			
39224-C00	39223-C00	39225-C00	See Note	42	5 (2.3)
39224-C00	39223-C00	39225-C03	See Note	45	5 (2.3)
39224-C00	39223-C00	39225-C06	See Note	48	6 (2.7)
39224-C00	39223-C00	39225-C10	See Note	52	6 (2.7)
Retrofit Kits					
39224-C00	39223-C00	39225-C99	See Note	Any	3 (1.4)

Note: On GlobalFrame, all latch kits are single-point except P/N 39225 which is two-point for the double rear door. Use retrofit electronic lock kits to replace an existing swing handle on the cabinet door. Use the kits listed at the top of the order matrix with new doors.

Electronic Lock Kit, System 1000 For ThinLine II Wall-Mount Cabinet		
Part Number	Description	Shipping Weight lb (kg)
13830-700	Electronic Lock Kit, System 1000, Single-Point Latch	3 (1.4)

CHATSWORTH PRODUCTS

©2013 Chatsworth Products, Inc. All rights reserved. CPI, CPI Passive Cooling, GlobalFrame, MegaFrame, Saf-T-Grip, Seismic Frame, SlimFrame, TeraFrame, Cube-iT Plus, Evolution, OnTrac, Velocity and QuadraRack are federally registered trademarks of Chatsworth Products. eConnect and Simply Efficient are trademarks of Chatsworth Products. All other trademarks belong to their respective companies.12/13/NB

Closet Connector Housings (CCH)

A LANscape® Solutions Product

Designed based on thousands of hours of voice of customer feedback, Corning Cable Systems Closet Connector Housings (CCHs) offer more than two dozen innovative features that make installation and troubleshooting of fiber optic connectivity faster, easier and more cost-effective. From fiber and cable routing and strain relief to port labeling and termination, these housings reduce the risk of error that can disrupt networks.

LANscape® Solutions | Photo MM003

CORNING | LANscape® Solutions

Closet Connector Housings (CCH)

A LANscape® Solutions Product

features and benefits |

Interconnect and cross-connect capability	Ideal for field connectorization
Removable, translucent top covers (1U, 2U, 3U) and removable rear cover (4U)	Visibility and ease of access for installation, testing and trouble-shooting
Internal and external strain-relief options	Flexibility for installation and moves, adds and changes (MACs)
Accepts panels, modules and cassettes	Variety of field termination options
Adaptable to use as a modular splice housing	Splices are stored and protected in same footprint

Closet Connector Housings

Corning Cable Systems Closet Connector Housings (CCHs) provide interconnect or cross-connect capabilities between outside plant, riser or distribution cables and opto-electronics. Like all LANscape® Solutions hardware, the housings accept CCH connector panels. In addition, the housings accept CCH cassettes and CCH modules.

Corning Cable Systems CCH Hardware Includes the CCH-01U, CCH-02U, CCH-03U, CCH-04U | Photo LAN2511

CCH-01U with Translucent Top (Covers Partially Open) | Photo LAN2337

CORNING | LANscape® Solutions

Closet Connector Housings (CCH)

A LANscape® Solutions Product

The units are designed for rack mounting in 19-in (48 cm) racks or optional 23-in (58 cm) equipment racks (1.75-in EIA hole spacing). They are available in rack space options of 1U (two panels, cassettes or modules), 2U (four panels, cassettes or modules), 3U (six panels, cassettes or modules) and 4U (twelve panels, cassettes or modules). The 1U, 2U and 3U options feature a slide-out tray and see-through, removable top covers. The CCH-04U features a clear door, removable front and rear enclosures and a platinum-colored interior for maximum visibility and access.

Documentation labels are provided and components can be added as needed to construct a fiber distribution frame for any application. All housings include a removable tinted polycarbonate front door. All housings have field-installable lock kits available for both front and rear doors.

Every CCH housing is shipped complete with strain-relief brackets, routing clips and guides and mounting brackets for proper installation.

CCH-03U Installed with Splice Cassettes | Photo LAN2519

CCH-04U Installed with CCH Connector Panels (Sold Separately) | Photo LAN2616

specifications and ordering information |

	Dimensions (H x W x D) cm (in)	Shipping Weight kg (lb)
CCH-01U	4.4 x 48 x 43 (1.75 x 19 x 17)	5.0 (11.0)
CCH-02U	8.9 x 48 x 43 (3.5 x 19 x 17)	6.5 (14.2)
CCH-03U	13.3 x 48 x 43 (5.25 x 19 x 17)	7.75 (17.0)
CCH-04U	17.8 x 48 x 43 (7 x 19 x 17)	8.0 (17.6)

Closet Connector Housings (CCH)

A LANscape® Solutions Product

specifications and ordering information | (continued)

Part Number	Description
Closet Connector Housings	
CCH-01U	Closet Connector Housing; accepts up to 2 CCH panels, cassettes or modules; comes with blank panels and hardware to strain-relieve cables internally or externally
CCH-02U	Closet Connector Housing; accepts up to 4 CCH panels, cassettes or modules; comes with blank panels and hardware to strain-relieve cables internally or externally
CCH-03U	Closet Connector Housing; accepts up to 6 CCH panels, cassettes or modules; comes with blank panels and hardware to strain-relieve cables internally or externally
CCH-04U	Closet Connector Housing; accepts up to 12 CCH panels, cassettes or modules; comes with blank panels and hardware to strain-relieve cables internally or externally

If you need the previous CCH housing (pre-January 2012), use the following part numbers (see LAN-1392-EN):

Part Number	Description
Classic Closet Connector Housings	
CLSSC-01U	Classic Closet Connector Housing; accepts up to 2 CCH panels; comes with blank panels and hardware to strain relieve 1 cable with the universal cable clamp (UCC) or up to (5) 0.4 in or smaller cables with the UCC insert. Does not accept CCH cassettes.
CLSSC-02U	Classic Closet Connector Housing; accepts up to 4 CCH panels; comes with blank panels and hardware to strain relieve 1 cable with the universal cable clamp (UCC) or up to (5) 0.4 in or smaller cables with the UCC insert. Does not accept CCH cassettes.
CLSSC-03U	Classic Closet Connector Housing; accepts up to 6 CCH panels; comes with blank panels and hardware to strain relieve 1 cable with the universal cable clamp (UCC) or up to (5) 0.4 in or smaller cables with the UCC insert. Does not accept CCH cassettes.
CLSSC-04U	Classic Closet Connector Housing; accepts up to 12 CCH panels; comes with blank panels and hardware to strain relieve 1 cable with the universal cable clamp (UCC) or up to (5) 0.4 in or smaller cables with the UCC insert. Does not accept CCH cassettes.

Closet Connector Housings (CCH)

A LANscape®
Solutions Product

CCH Cassettes

CCH Splice Cassettes enable fast field termination and easy modular management of connectorization within the housing.

The CCH Splice Cassette supports fusion splicing of individual or ribbon fibers, with heat shrinks, pigtail slack and cable slack managed within a single space-saving footprint. This eliminates the need for individual splice trays or separate splice housings, as well as allowing splicing to be done away from the rack housing in a suitable workspace as needed. The modular design makes it easy to access the fiber in an individual cassette without disturbing the other fibers in the housing.
A CCH panel with the desired adapter configuration can be ordered separately and fits easily into the cassette.

Each cassette is shipped with 1 rail for use with CCH-01U/2U/3U housings, and 2 rails used with CCH-04U housings. Grommets and cable ties for additional strain relief and protective tubing for incoming cable are also included. Splice cassettes ship with 12 single-fiber heat-shrink splice protectors.

CCH Splice Cassette | Photo LAN2452

CCH Slack Cassette

A CCH Slack Cassette option with no splice tray, suitable for use with field-installable connectors, is also available. The Slack Cassette is an economical way to provide modularity, segregation and added protection and security to your direct terminated fibers inside of any of the 4 CCH housing options.

Each cassette is shipped with 1 rail for use with CCH-01U/2U/3U housings, and 2 rails used with CCH-04U housings. Grommets and cable ties for additional strain relief and protective tubing for incoming cable are also included.

CCH Slack Cassette | Photo LAN2984

Closet Connector Housings (CCH)

A LANscape®
Solutions Product

specifications and ordering information |

Part Number	Description
CCH-CS	CCH Splicing Cassette; accepts 1 CCH Panel and up to 24 single-fiber or 6 ribbon heat-shrink splice protectors; comes with 12 single-fiber heat-shrink splice protectors, grommets and cable ties for strain relief, protective braided tubing, 1 rail for use with CCH-01U/2U/3U housings and 2 rails used with CCH-04U housings
CCH-CF	CCH Slack Storage Cassette; accepts 1 CCH Panel and provides modular slack storage for direct factory or field termination of incoming (e.g., distribution) cables; comes with grommets and cable ties for strain-relief, protective braided tubing, 1 rail for use with CCH-01U/2U/3U housings and 2 rails used with CCH-04U housings

	Dimensions (H x W x D) cm (in)	**Shipping Weight kg (lb)**
CCH-CS	16.2 x 3.5 x 20 (6.4 x 1.4 x 7.9)	0.5 (1)
CCH-CF	16.2 x 3.5 x 20 (6.4 x 1.4 x 7.9)	0.5 (1)

Closet Connector Housings (CCH)

A LANscape®
Solutions Product

CCH Pigtailed Cassettes

CCH Pigtailed Splice Cassettes enable faster field splicing and easy modular management of connectorization within the housing.

The CCH Pigtailed Splice Cassettes are pre-loaded and pre-routed for quick fusion splicing of either individual or ribbon fiber pigtails, utilizing the same space-saving platform as the standard CCH Splice Cassette.

The pre-routed Pigtailed Cassettes reduce field labor by streamlining the features and components of the pigtail cassette to allow for efficiencies in the field. They are loaded with a pigtail assembly and a CCH Connector Panel. The pigtails have 900 µm protection at the connector panel for added durability, routed into the splice tray layer, where it transitions to either 250 µm fiber or bare ribbon (depending on the splicing method desired) for ease of splicing.

The Pigtailed Cassette allows the elimination of individual splice trays or separate splice housings, as well as allowing splicing to be done away from the rack housing in a suitable workspace as needed. The modular design makes it easy to access the fiber in an individual cassette without disturbing the other fibers in the housing.

Each cassette is shipped with the CCH Connector Panel and choice of pigtails, 1 rail for use with CCH-01U/2U/3U housings, and 2 rails used with CCH-04U housings. Grommets and cable ties for additional strain relief and protective tubing for incoming cable are also included. Splicing cassettes ship with the appropriate number and type of fiber heat-shrink splice protectors.

CCH Pigtailed Cassette | Photo LAN2741

CCH Pigtailed Cassette | Photo LAN2593

Closet Connector Housings (CCH)

A LANscape® Solutions Product

specifications and ordering information |

Pigtailed Splice Cassettes (CCH-CS)

CCH Splice Cassette (CCH-CS) loaded with CCH panel and factory-terminated pigtails. Available with ribbon or single-fiber splicing configurations. Includes appropriate number and type of heat shrinks and protective tubing depending on fiber count and cable type. See matrix on the next page to build your part number.

Multimode	
Loss	0.35 dB typical (all fibers) at 1300 nm, 0.5 dB max*

Single-Mode	
Loss	0.15 dB typical (all fibers) at 1310 nm, 0.4 dB max*

The following 6 products are in the core CCH product set and are stocked at our distributors for immediate availability.

Part Number	Description	Type
CCH-CS12-59-P00RE	12 F, SC, UPC, Duplex, Single-mode (OS2), Single-fiber (250 µm)	Rack-Mountable Hardware
CCH-CS12-6T-P00RE	12 F, ST® Compatible, UPC, Simplex, Single-mode (OS2), Single-fiber (250 µm)	Rack-Mountable Hardware
CCH-CS12-A9-P00RE	12 F, LC, UPC, Duplex, Single-mode (OS2), Single-fiber (250 µm)	Rack-Mountable Hardware
CCH-CS24-A9-P00RE	24 F, LC, UPC, Duplex, Single-mode (OS2), Single-fiber (250 µm)	Rack-Mountable Hardware
CCH-CS12-E4-P00TE	12 F, LC, PC, Duplex, 50 µm (OM3), Single-fiber (250 µm)	Rack-Mountable Hardware
CCH-CS24-E4-P00TE	24 F, LC, PC, Duplex, 50 µm (OM3), Single-fiber (250 µm)	Rack-Mountable Hardware

	Dimensions (H x W x D) cm (in)	**Shipping Weight kg (lb)**
CCH-CS □□ - □□ - P00 □□	16.2 x 3.5 x 20 (6.4 x 1.4 x 7.9)	0.75 (1.5)

CORNING | LANscape® Solutions

Closet Connector Housings (CCH)

A LANscape® Solutions Product

ordering information | (continued)

CCH Pigtailed Splice Cassettes

CCH - CS □□ - □□ - P00 □ □
|1 |2 |3 |4

|1

Select fiber count.
06 = 6 fibers
08 = 8 fibers
12 = 12 fibers
16 = 16 fibers
24 = 24 fibers
See Note 1

|2

Select adapter code (see Adapter/Connector Code Options table on following page).

|3

Select fiber type.
K = 625 µm multimode (OM1)
B = 50 µm multimode (OM2)
T = 50 µm multimode (OM3)
Q = 50 µm multimode (OM4)
R = Single-mode (OS2)

|4

Select splicing type.
E = Single fiber splicing
J = Ribbon splicing (only for fiber counts of 12 or 24)

Note:
1) Fiber count for desired adapter is available in table on following page.

Part Number	Description
Part Number Examples	
CCH-CS12-59-P00RE	Closet Connector Housing Pigtail Cassette with 6 SC duplex single-mode adapters, with 12 single-mode SC pigtails routed inside the cassette for single-fiber splicing
CCH-CS24-E4-P00TE	Closet Connector Housing Pigtail Cassette with 12 LC duplex aqua OM3/4 adapters, with 24 OM3 LC pigtails routed inside the cassette for single-fiber splicing

Closet Connector Housings (CCH)

A LANscape® Solutions Product

adapter/connector code options |

Adapter Code	Fiber Type	Alignment	Housing	Fiber/ Adapter	Available Fiber/Panel Counts 6	8	12	16	24
LC Duplex									
A8	62.5 µm multimode (OM1)	Ceramic	Composite	2	X	X	X	X	X
D3	50 µm multimode (OM2)	Ceramic	Composite	2	X	X	X	X	X
E4	50 µm multimode (OM3/4)	Ceramic	Composite	2	X	X	X	X	X
A9	Single-mode, UPC (OS2)	Ceramic	Composite	2	X	X	X	X	X
B3	Single-mode, APC (OS2)	Ceramic	Composite	2	X	X	X	X	X
SC Duplex									
91	62.5 µm multimode (OM1)	Metal	Composite	2	X	X	X		
G7	50 µm multimode (OM2)	Ceramic	Composite	2	X	X	X		
E7	50 µm multimode (OM3/4)	Ceramic	Composite	2	X	X	X		
59	Single-mode, UPC (OS2)	Ceramic	Composite	2	X	X	X		
D9	Single-mode, APC (OS2)	Ceramic	Composite	2	X	X	X		
SC									
56	62.5 µm multimode (OM1)	Metal	Composite	1	X	X	X		
G6	50 µm multimode (OM2)	Ceramic	Composite	1	X	X	X		
E6	50 µm multimode (OM3/4)	Ceramic	Composite	1	X	X	X		
3C	Single-mode, UPC (OS2)	Ceramic	Composite	1	X	X	X		
6C	Single-mode, APC (OS2)	Ceramic	Composite	1	X	X	X		
ST® Compatible Connector									
5T	62.5 µm multimode (OM1)	Ceramic	Metal	1	X	X	X		
G5	50 µm multimode (OM2)	Ceramic	Metal	1	X	X	X		
H3	50 µm multimode (OM3/4)	Ceramic	Metal	1	X	X	X		
6T	Single-mode, UPC (OS2)	Ceramic	Metal	1	X	X	X		
FC									
11	Single-mode, UPC (OS2)	Metal	Metal	1	X	X	X		
21	Single-mode, APC (OS2)	Metal	Metal	1	X	X	X		
MT-RJ, pinned									
97	62.5 µm multimode (OM1)	N/A	Composite	2		X	X	X	X
G1	50 µm multimode (OM2)	N/A	Composite	2		X	X	X	X
E1	50 µm multimode (OM3/4)	N/A	Composite	2		X	X	X	X
98	Single-mode, UPC (OS2)	N/A	Composite	2		X	X	X	X

Fiber Type	Housing Color
62.5 µm multimode (OM1)	Beige
50 µm multimode (OM2)	Black
50 µm multimode (OM3/4)	Aqua
Single-mode, UPC (OS2)	Blue
Single-mode, APC	Green

Note: For keyed LC ordering information, please refer to LAN-701-EN.

Closet Connector Housings (CCH)

A LANscape® Solutions Product

ordering information | (continued)

Part Number	Description	
Accessories		
Strain Relief		
UCC-001	Universal Cable Clamp Kit for use with external strain-relief bracket of CCH housings. Includes one UCC clamp and inserts for one cable up to 1.125-in diameter or up to five 0.4-in or smaller cables.	
CPP-SSR-KIT	Central Member Strain-Relief Kit. Includes one clamp, washers and screw to attach to CCH internal strain-relief bracket.	
Mounting		
CCH1-RECESS-KIT-5	Includes 5 pairs of brackets to recess mount 5 CCH-01U housings	
CCH2-RECESS-KIT-5	Includes 5 pairs of brackets to recess mount 5 CCH-02U housings	
CCH3-RECESS-KIT-5	Includes 5 pairs of brackets to recess mount 5 CCH-03U housings	
CCH4-RECESS-KIT-5	Includes 5 pairs of brackets to recess mount 5 CCH-04U housings	
CCH4-3INCH-KIT-5	Includes 5 pairs of brackets to mount 5 CCH-04U housings with 3-in frontal projection (standard CCH-04U frontal projection is 5-in)	
CDF-01U-23-BKT	23-in Mounting Brackets for the CCH-01U	
CDF-02U-23-BKT	23-in Mounting Brackets for the CCH-02U	
CDF-03U-23-BKT	23-in Mounting Brackets for the CCH-03U	
CDF-04U-23-BKT	23-in Mounting Brackets for the CCH-04U	

CORNING | LANscape® Solutions

Closet Connector Housings (CCH)

A LANscape®
Solutions Product

ordering information | (continued)

Part Number	Description	
Mounting		
CDF-01U-24-BKT	24-in Mounting Brackets for the CCH-01U	
CDF-02U-24-BKT	24-in Mounting Brackets for the CCH-02U	
CDF-03U-24-BKT	24-in Mounting Brackets for the CCH-03U	
CDF-04U-24-BKT	24-in Mounting Brackets for the CCH-04U	
Miscellaneous		
FDC-CABLE-GRND	Armored Cable Grounding Kit; contains armored grounding clip and ground strap	
CCHA-LOCK-KIT	CCH Hardware Lock Kit, compatible with CCH-01U, CCH-02U, CCH-03U, CCH-04U front and rear doors	
CJP-01U	Closet Jumper Management Panel; provides jumper management in a 1.75-in rack space	
CJP-02U	Closet Jumper Management Panel; provides jumper management in a 3.5-in rack space	
CJP-03U	Closet Jumper Management Panel; provides jumper management in a 5.25-in rack space	

CORNING | LANscape® Solutions

Closet Connector Housings (CCH)

A LANscape® Solutions Product

ordering information | (continued)

Part Number	Description	
Replacement Parts		
Covers and Doors		
CCH1-TOP-COVER-2	Top Covers (2) for CCH-01U, CCH-02U and CCH-03U, with 2 label cards	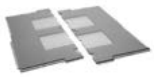
CCH1-DOOR-FRONT	Front Door for CCH-01U, includes hinges and latches	
CCH2-DOOR-FRONT	Front Door for CCH-02U, includes hinges and latches	
CCH3-DOOR-FRONT	Front Door for CCH-03U, includes hinges and latches	
CCH4-DOOR-FRONT	Front Door for CCH-04U, includes hinges and latches	
CCH1-DOOR-REAR	Rear Door for CCH-01U, includes hinges and latches	
CCH2-DOOR-REAR	Rear Door for CCH-02U, includes hinges and latches	
CCH3-DOOR-REAR	Rear Door for CCH-03U, includes hinges and latches	
CCH4-DOOR-REAR	Rear Door for CCH-04U, includes hinges and latches	
Labeling		
CCH1-LABEL-CARD-20	Plastic Label Holder Cards for CCH-01U, CCH-02U, CCH-03U; 20 per pack	
CCH4-LABEL-CARD-20	Plastic Label Holder Cards for CCH-04U; 20 per pack	
CCHA-LABEL-PNL-50	Additional Adhesive Labels for the CCH; contains 50 labels	

CORNING | LANscape® Solutions

Closet Connector Housings (CCH)

A LANscape® Solutions Product

ordering information | (continued)

Part Number	Description	
Strain Relief		
CCH1-STRN-INT	Internal Strain-relief Bracket for the CCH-01U, CCH-02U, CCH-03U	
CCH1-STRN-EXT	External Strain-relief Bracket for the CCH-01U, CCH-02U, CCH-03U	
CCH4-STRN-INT	Internal Strain-relief Bracket for the CCH-04U	
CCH4-STRN-EXT	External Strain-relief Bracket for the CCH-04U	
CCHA-CLIP-BTF-2	Transitional Strain-relief Clip for CCH-01U, CCH-02U, CCH-03U, CCH-04U; 2 per pack	
Fiber and Cable Management		
CCH1-CASS-RAIL	1 Stacker Rail for CCH-01U, CCH-02U, CCH-03U; for use with CCH cassettes	
CCH4-CASS-RAIL-24	Small Rails for CCH-04U; for use with CCH cassettes; 24 per pack	
CCHA-CLIP-SLCK-8	Segregated Fiber Routing Clips for CCH-01U, CCH-02U, CCH-03U, CCH-04U; 8 per pack	
CCH1-GUIDE-JMPR-3	Front Jumper Routing Guide for the CCH-01U, CCH-02U, CCH-03U; 3 per pack	
CCH4-CLIP-JMPR-8	Front Jumper Routing Guide for the CCH-04U; 8 per pack	
CCHA-CLIP-PNL-24	Panel Clips for the CCH-01U, CCH-02U, CCH-03U, CCH-04U; 24 per pack	

CORNING | LANscape® Solutions

Velocity® Cable Management for CPI Rack Systems

An economical cable management solution for CPI Rack Systems. Create vertical and horizontal pathways that store and organize premise cables and patch cords on two- and four-post Rack Systems.

ADVANTAGES

Increased Cable Capacity
Single-sided vertical managers are deeper to provide more cable capacit

Compact Packaging
Reduces waste, freight costs and uses less storage space.

Simplified Cable Management
Optimize cable pathways using the integrated T-shaped cable guides and protect cables with snap-on covers

Tool-less Assembly
Components snap together for quick and easy assembly

PATENTED

KEY FEATURES

- Quick and easy tool-less snap together design takes approximately 3 - 5 minutes to unpack, assemble and install
- Compact packaging is 25% - 57% smaller than comparable managers, easy to ship, requires less storage space, reduces waste and makes cartons easier to handle
- Larger cross-section on single-sided vertical managers provides up to 1/3 more cable management space
- Openings on the side of the manager align with each rack-mount unit
- T-shaped cable guides provide more space between fingers to organize cables by rack-mount unit
- Rounded edges on cable guides and openings protect cables as they enter and exit the manager
- Openings in the back of the manager allow easy front-to-rear cabling
- Snap-on covers secure and protect cables

SPECIFICATIONS

Description	Vertical and horizontal cable managers for open two- and four-post CPI Rack Systems
	For indoor use only, in environmentally controlled areas; may not be used outdoors, in harsh environments or in air-handling spaces
Single-Sided Cable Manager Includes:	Four vertical side sections with T-shaped cable guides (fingers) spaced 1U apart
	Four mid panels with attachment points for cable management accessories
	Two splice plates used to assemble the top and bottom side sections
	Two half-height covers that snap onto the T-shaped cable guides
	Eight M8 hex bolts, washers and hex flange nuts to secure cable managers to the rack
Double-Sided Cable Manager Includes:	Four vertical side sections with T-shaped cable guides (fingers) spaced 1U apart
	Four mid panels with attachment points for cable management accessories
	Two splice plates used to assemble the top and bottom side sections
	Four half-height covers that snap onto the T-shaped cable guides
	Eight M8 hex bolts, washers and hex flange nuts to secure cable managers to the rack
Horizontal Cable Manager Includes:	One 19"W EIA rack-mount cable manager with T-shaped cable guides (fingers)
	One cover that snaps onto the T-shaped cable guides
	Four #12-24 x 1" rack-mount screws and four M6 x 25 mm rack-mount screws
Construction:	Snaps together
Finish:	Black epoxy-polyester hybrid powder coat paint on steel parts; black plastic

Availability Statement

US & Canada
+1-800-834-4969
Toronto, Ontario, Canada
+905-850-7770
chatsworth.com
techsupport@chatsworth.com

Latin America
+52-55-5203-7525
Toll Free within Mexico
01-800-01-7592
chatsworth.com.co

Europe
+44-1628-524-834
chatsworthproducts.co.uk

Middle East & Africa
Dubai, UAE
+971-4-2602125
chatsworth.ae

Asia Pacific
+86 21 6880-0266
chatsworth.com.cn

CHATSWORTH PRODUCTS

SPECIFICATIONS

Packaging:	Each vertical cable manager ships unassembled in a single carton
	Each horizontal cable manager ships fully assembled in a single carton
Sizes:	See ordering information at right
Cable Fill:	See cable fill table at www.chatsworth.com/cablefill
Material:	Vertical cable manager has steel mid panels and splice plates and plastic sides; covers on 3.6"W (91mm) and 6"W (152 mm) managers are plastic; covers on 10"W (254 mm) and 12" (305 mm) managers are steel with plastic hinges
	Horizontal cable manager is plastic
Finish:	

USE WITH

- Standard Rack 3"D (80 mm)
- QuadraRack™ Server Frame
- QuadraRack™ 4-Post Frame
- Adjustable QuadraRack™
- Adjustable ServerRack
- Adjustable Rail QuadraRack™
- Adjustable Rail ServerRack

RELATED PRODUCTS

- Cable Spool Kit
- Cable Lashing Bar Kit
- Cable Ring Kit
- Jumper Trays
- Patch Panel Wire Management Bar

Design

Velocity Cable Management includes single- and double-sided vertical cable managers available in four widths and three heights, and matching single-sided horizontal cable managers in three heights. The vertical cable managers ship unassembled in compact packaging to reduce shipping costs and storage space, providing easier staging and handling on the job site with less packaging to remove. No tools are required to assemble the cable manager. The components simply snap together and the manager bolts to the side of the rack with included hardware.

The vertical cable manager features a large cross section to maximize internal cable management space. To simplify cable management, T-shaped cable guides and openings on the sides of the manager align with each rack-mount unit and have rounded edges to protect cables from snags. Snap-on covers are included and swing open to the right or left to provide easy access and protect cables when closed. The manager has openings in the body which allow cables to pass easily front-to-rear. Add the accessory Cable Spool Kit to manage fiber, the Cable Lashing Bar Kit to secure large cable bundles or the Cable Ring Kit to create a rear pathway on the back of single-sided managers.

The horizontal cable manager ships fully assembled and also features T-shaped cable guides at the top and bottom of the manager to organize patch cords. Two cable openings in the rear of the manager allow front-to-rear cabling and the snap-on cover stays in the opened position to provide easy access to cables.

See inside for product details. Contact CPI Technical Support for configurations assistance.

Features quick and easy tool-less snap together design that takes approximately 3 - 5 minutes to unpack, assemble and install

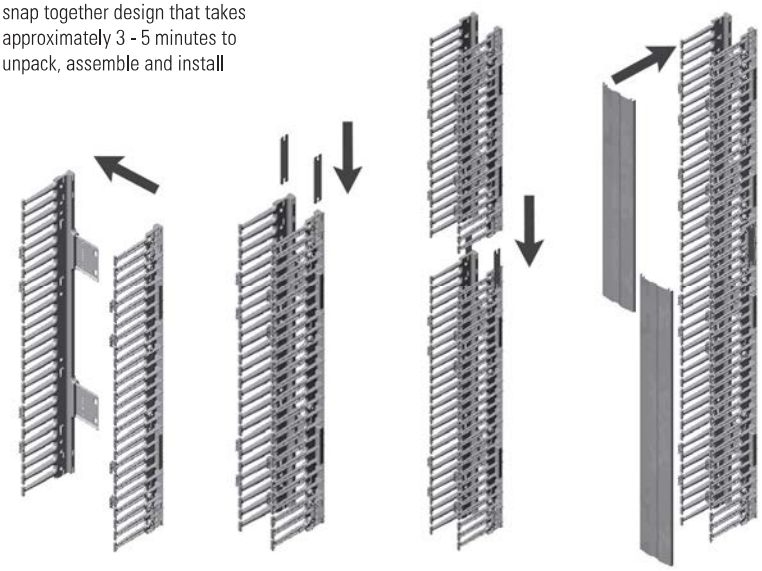

Step 1:
Insert mid panel into plastic cable side section

Step 2:
Insert the two splice plates into the slots at the end of each side section

Step 3:
Slide the top side section onto the protruding ends of the splice plates until fully seated

Step 4:
Mount each cover by positioning over the hinges and pressing firmly to snap into place

ORDERING INFORMATION

Part Number	Single-Sided Vertical Cable Managers H x W x D in (mm)	Shipping Weight lb (kg)
For 6'H (1.8 m), 38U Racks		
13901-701	70 x 3.6 x 9.7 (1778 x 91 x 246)	17 (7.7)
13902-701	70 x 6 x 9.8 (1778 x 152 x 249)	19 (8.2)
13904-701	70 x 10 x 10.3 (1778 x 254 x 262)	30 (13.6)
13905-701	70 x 12 x 10.4 (1778 x 305 x 264)	32 (14.5)
For 7'H (2.1 m), 45U Racks		
13901-703	80.5 x 3.6 x 9.7 (2045 x 91 x 246)	18 (8.2)
13902-703	80.5 x 6 x 9.8 (2045 x 152 x 249)	20 (9.1)
13904-703	80.5 x 10 x 10.3 (2045 x 254 x 262)	32 (14.5)
13905-703	80.5 x 12 x 10.4 (2045 x 305 x 264)	34 (15.4)
For 8'H (2.4 m), 51U Racks		
13901-715	91 x 3.6 x 9.7 (2311 x 91 x 246)	18 (8.2)
13902-715	91 x 6 x 9.8 (2311 x 152 x 249)	20 (9.1)
13904-715	91 x 10 x 10.3 (2311 x 254 x 262)	32 (14.5)
13905-715	91 x 12 x 10.4 (2311 x 305 x 264)	34 (15.4)

Notes: Color is Black. Velocity Single-Sided Vertical Cable Managers are 9.5 inches deep (241 mm) without doors. The overall depth listed in the order table varies due to the bevel on the door which differs slightly with width. Usable depth is 7.5 inches (191 mm). Usable width is 1.3 inches (33 mm) less than overall width.

Part Number	Double-Sided Vertical Cable Managers H x W x D in (mm)	Shipping Weight lb (kg)
For 6'H (1.8 m), 38U Racks		
13911-701	70 x 3.6 x 16.4 (1778 x 91 x 417)	23 (10.4)
13912-701	70 x 6 x 16.6 (1778 x 152 x 422)	26 (11.8)
13914-701	70 x 10 x 17.5 (1778 x 254 x 445)	37 (16.8)
13915-701	70 x 12 x 17.8 (1778 x 305 x 446)	40 (18.1)
For 7'H (2.1 m), 45U Racks		
13911-703	80.5 x 3.6 x 16.4 (2045 x 91 x 417)	25 (11.8)
13912-703	80.5 x 6 x 16.6 (2045 x 152 x 422)	28 (12.7)
13914-703	80.5 x 10 x 17.5 (2045 x 254 x 445)	40 (18.1)
13915-703	80.5 x 12 x 17.8 (2045 x 305 x 446)	43 (19.5)
For 8'H (2.4 m), 51U Racks		
13911-715	91 x 3.6 x 16.4 (2311 x 91 x 417)	27 (12.2)
13912-715	91 x 6 x 16.6 (2311 x 152 x 422)	30 (13.6)
13914-715	91 x 10 x 17.5 (2311 x 254 x 445)	44 (20.0)
13915-715	91 x 12 x 17.8 (2311 x 305 x 446)	47 (21.3)

Notes: Color is Black. Velocity Double-Sided Vertical Cable Managers are 16 inches deep (406 mm) without doors. The overall depth listed in the order table varies due to the bevel on the door which differs slightly with width. Usable depth in the front of the manager is 7.5 inches (191 mm). Usable depth at the rear of the manager is 5.5 inches (140 mm). Usable width is 1.3 inches (33 mm) less than overall width.

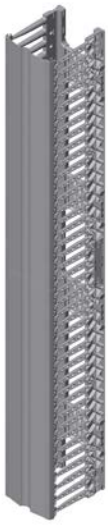

Single-Sided (13905-703)

Double-Sided (13915-703)

Single-Sided Horizontal Cable Managers		
Part Number	**Description H x W x D in (mm)**	**Shipping Weight lb (kg)**
13930-701	1U x 19 x 5.9 (150)	2 (0.9)
13930-702	2U x 19 x 5.9 (150)	3 (1.4)
13930-703	3U x 19 x 5.9 (150)	3 (1.4)

Notes: Color is Black. 1U = 1.75 inches (44.45 mm); the overall height of the manager is .03 inches (0.16 mm) less than the full rack-mount unit height. Usable depth is 3.7 inches (94 mm). The usable height of the manager varies but is 1.2 inches (31 mm) less than the overall height of the manager at the narrowest point.

ACCESSORIES

Cable Spool Kit

The Cable Spool Kit includes four small cable spools to provide slack management and strain relief for patch cords and jumper cables inside the Velocity Vertical Cable Managers.

- Use in 6"W (152 mm) or wider vertical cable managers; one kit per side
- Attaches to the mid panel with included hardware
- Spools are 2" (51 mm) in diameter and 6"L (152 mm)
- Made from aluminum; painted black
- Each kit includes four spools and mounting hardware

Cable Distribution Spools

Cable Distribution Spools provide slack management and strain relief for patch cords and jumper cables inside Velocity Vertical Cable Managers.

- Use in 10"W (254 mm) or 12"W (305 mm) vertical cable manager, (will not fit in other sizes)
- Attaches to the mid panel with included hardware
- Spools are 2.75" (69.9 mm) in diameter and 5.9"L (150 mm)
- Made from black plastic
- Each kit includes four spools and mounting hardware

Cable Distribution Spool Spacer Kit

Cable Distribution Spool Spacer Kit includes eight spacers that are used with the Cable Distribution Spools (P/N 15008-001) inside Velocity Vertical Cable Managers to offset the spool so that the front edge of the spool is close to the front edge of the cable management fingers.

- Use in 10"W (254 mm) or 12"W (305 mm) vertical cable managers; use on the front side of double-sided managers only
- Attaches to the mid panel with included hardware
- Spacers are 2.8" (71 mm) in diameter and 2.5"L (64 mm)
- Made from black plastic
- Each kit includes eight spacers and mounting hardware

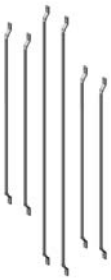

Cable Lashing Bar Kit

The Cable Lashing Bar Kit provides tie points for cables inside Velocity Vertical Cable Managers.

- Use in 6"W (152 mm) or wider vertical cable managers; one kit per side
- Attaches to the rear/mid panel with included hardware
- Bars are .23" (5.7 mm) in diameter; two bars are 23.7"L (602 mm); four bars are 16.6"L (422 mm)
- Made from steel; zinc-plated, silver-colored
- Each kit includes six lashing bars and mounting hardware

Velocity Cable Management for Rack Systems		
Part Number	Description H x W ft (m) x in (mm)	Shipping Weight lb (kg)
13935-701	Cable Spool Kit, Black, Pack of 4	2 (0.9)
15008-001	Distribution Spools, Black, Pack of 4	2 (0.9)
35505-001	Distribution Spool Spacer Kit, Black	1 (0.5)
13928-001	Cable Lashing Bar Kit, Zinc Plated, Silver	2 (0.9)
13934-716	Cable Ring Kit, For 3.6"W (91 mm) x 6'H (1.8 m) Managers	8 (3.6)
13934-717	Cable Ring Kit, For 3.6"W (91 mm) x 7'H (2.1 m) Managers	9 (4.1)
13924-718	Cable Ring Kit, For 3.6"W (91 mm) x 8'H (2.4 m) Managers	11 (5.0)
13934-726	Cable Ring Kit, For 6"W (152 mm) x 6'H (1.8 m) Managers	9 (4.1)
13934-727	Cable Ring Kit, For 6"W (152 mm) x 7'H (2.1 m) Managers	11 (5.0)
13934-728	Cable Ring Kit, For 6"W (152 mm) x 8'H (2.4 m) Managers	12 (5.4)
13934-746	Cable Ring Kit, For 10"W (254 mm) x 6'H (1.8 m) Managers	12 (5.4)
13934-747	Cable Ring Kit, For 10"W (254 mm) x 7'H (2.1 m) Managers	14 (6.4)
13934-748	Cable Ring Kit, For 10"W (254 mm) x 8'H (2.4 m) Managers	15 (6.8)
13934-756	Cable Ring Kit, For 12"W (305 mm) x 6'H (1.8 m) Managers	14 (6.4)
13934-757	Cable Ring Kit, For 12"W (305 mm) x 7'H (2.1 m) Managers	16 (7.3)
13934-758	Cable Ring Kit, For 12"W (305 mm) x 8'H (2.4 m) Managers	18 (8.2)

Cable Ring Kit

The Cable Ring Kit creates a separate cable pathway on the back of a Velocity Single-Sided Vertical Cable Manager for premise cables.

- Match the kit to the width and height of the vertical cable managers; one kit per manager
- Attaches to the sides with included hardware
- Rings are C-shaped, 3.0"H x 7.7"D (76 mm x 196 mm), with a plastic latch that spins open to provide access to cables
- Cable opening on 3.6"W (91 mm) rings is 1.4"W (36 mm); cable opening on other rings is 3.8"W (97 mm)
- Rings are made from aluminum and painted black; latch is black plastic
- Each kit includes multiple rings and mounting hardware. The (-7X6) kits include six rings, the (-7X7) kits include seven rings, the (-7X8) kits include eight rings
- Color is black.

Scan or click here to visit our CPI Online Catalog.

For product CSI Specs visit the Support & Downloads page on **www.chatsworth.com**.

CHATSWORTH PRODUCTS

While every effort has been made to ensure the accuracy of all information, CPI does not accept liability for any errors or omissions and reserves the right to change information and descriptions of listed services and products.
©2016 Chatsworth Products, Inc. All rights reserved. Chatsworth Products, CPI, CPI Passive Cooling, eConnect, MegaFrame, Saf-T-Grip, Seismic Frame, SlimFrame, TeraFrame, GlobalFrame, Cube-iT Plus, Evolution, OnTrac, QuadraRack and Velocity are federally registered trademarks of Chatsworth Products. Simply Efficient is a trademark of Chatsworth Products. All other trademarks belong to their respective companies. Rev.2 01/16 MKT-60020-475

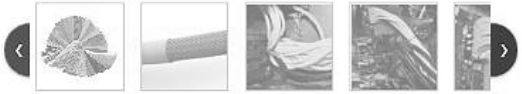

What's special about this color PET expandable sleeving?

- Easy to install, light weight, and flexible
- Quality Polyethylene (PET) construction gives sleeving a high tensile strength and makes it cut and abrasion resistant
- Adds a professional finishing touch to cable and wire management projects
- Moisture resistant, prevents rot and fungus (MIL-E-5272)
- Click for More Features

The unique properties of PET Expandable Braided Sleeving enable quick and easy installation over irregularly shaped areas, including large connectors. PET expandable sleeving is readily used for cable management in the automotive, computer, industrial, scuba, electronics, A/V industries, and the military. This sleeving also works great around the home and office, for PC cable management or TV cables in your home theater.

- Need more quantity? Take a look at our BULK orders
- Also available: BLACK Braided Sleeving

Price | **Features** | Specifications | Manuals | Related Items | Request a Quote | Q & A

- Continuous operating temperature of -103° F to 257° F; **PET** melt temperature is 446° F
- Offered in 16 vivid colors (use as a color coding system for easy identification of bundles)
- Good chemical resistance
- Monofilament size: 0.010"
- UV light resistant
- Neon Yellow, Neon Green, Neon Red, Neon Pink, Neon Blue, Nitrox & Ice Cream are UV Reactive
- Allows moisture to dissipate from assembly

1. Click here to find out How to Terminate the Ends of your Expandable Braided Sleeving
2. Not sure what size to use? Click here for some basic guidelines for use on common cable
3. How do we measure braided sleeving? View here

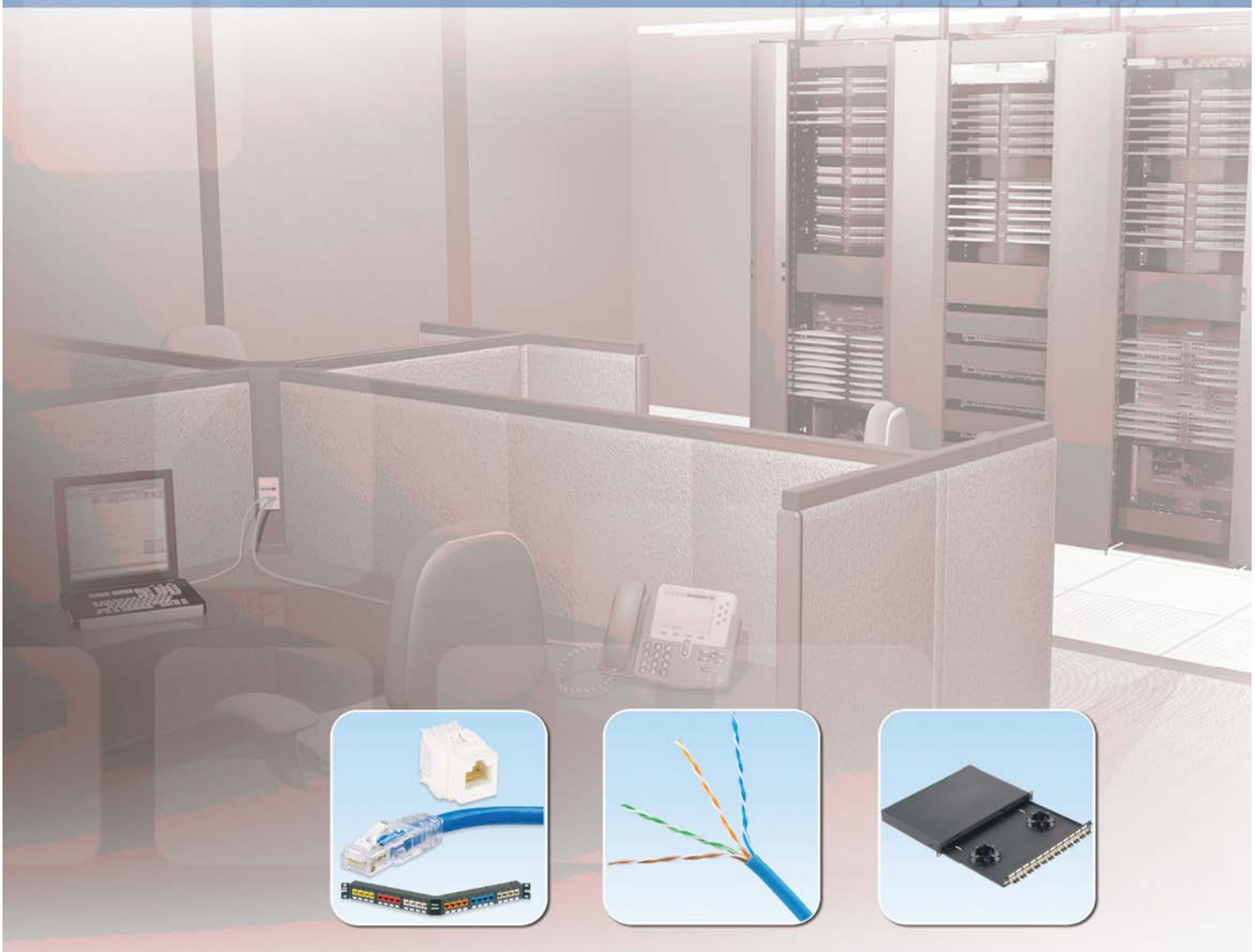

NetKey™ Cabling System

PANDUIT™

infrastructure for a connected world

PANDUIT™

NetKey™ Cabling System

The NetKey™ Copper and Fibre Cabling System provides a complete, standards compliant cabling infrastructure solution for voice, data and video applications. NetKey™ Modules feature the universal "keystone" design and are compatible with a wide assortment of modular patch panels, faceplates and surface mount boxes. When teamed with complementary Panduit products, the NetKey™ solutions cover all your needs from the telecommunication room to the work area with the proven innovation and quality you depend on from Panduit.

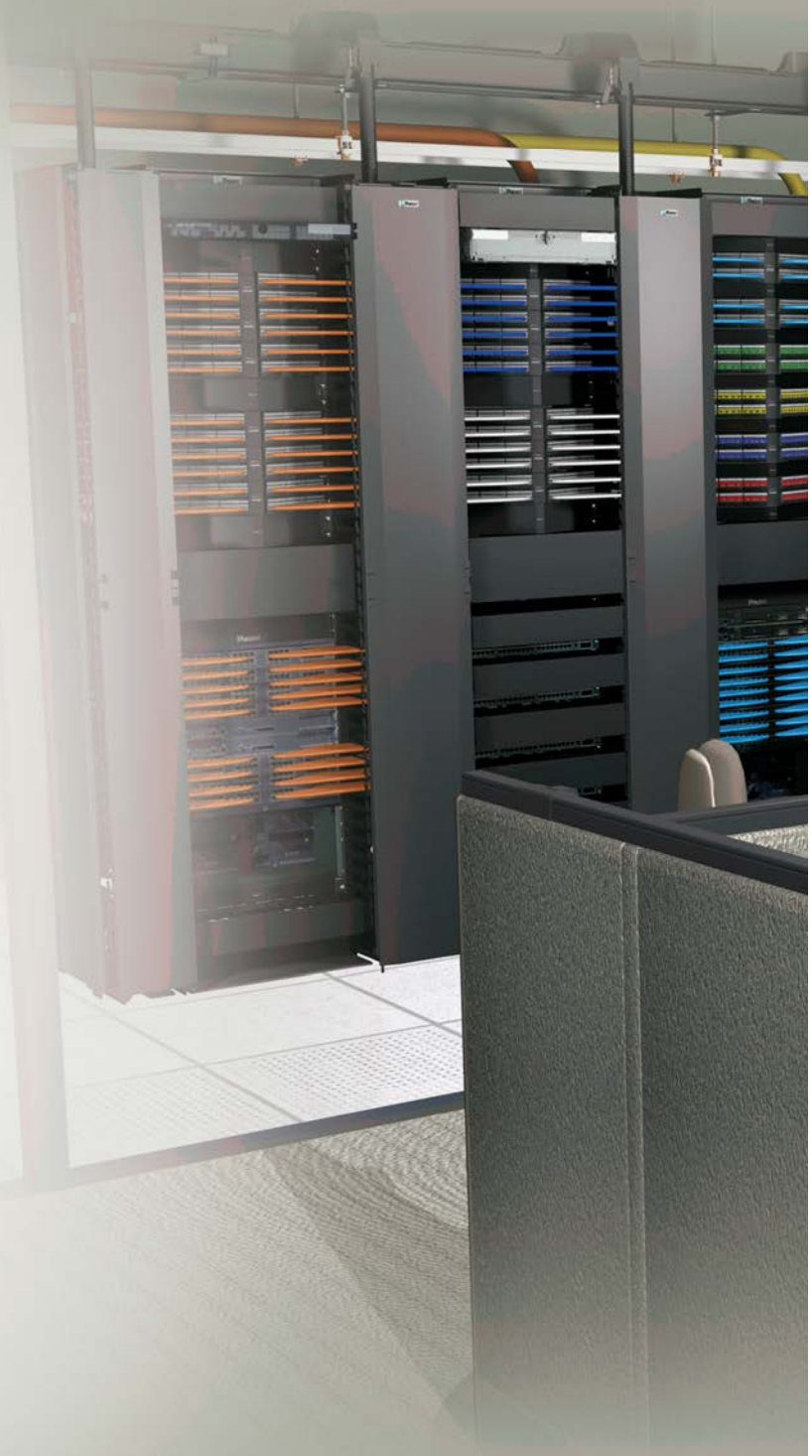

NetKey™ Copper Cable
Page 4

NetKey™ Modules
Pages 5, 7 and 15

NetKey™ Copper and Fibre Patch Cords
Pages 5, 8 and 9

PANDUIT™

NetKey Fiber Patch Cords
Page 6

NetKey Fiber Adapters and Enclosures
Page 7

NetKey™ Patch Panels
Page 10

NetKey™ Faceplates and Surface Mount Boxes
Pages 11 – 14

Identification and Labelling Systems
Page 23

NetKey A/V Modules
Page 13

Racks and Cable Management
Page 22

NetKey™ Copper Cable

- Meets ISO/IEC and ANSI/TIA-568-C.2 Category 6A/Class E(A), Category 6/Class E, and Category 5e/Class D performance requirements
- Reduced cable diameter for improved installation and termination
- Descending length cable markings enable easy identification of remaining cable
- Third party verified to ISO 11801 and ANSI/TIA-568-C.2
- 305m (1,000 ft.) in an easy-pay-out box

NUC6C04BU-CE

NUL6CR04BU-CE

Part Number	Description
Category 6A U/UTP Copper Cable	
NUL6X04BU-CEG	Category 6A, low smoke zero halogen (LSZH - IEC60332-1), 4-pair, 23 AWG, U/UTP, copper cable, Blue.
Category 6 UTP Copper Cable – Reduced Diameter	
NUL6CR04BU-CE^	Category 6, low smoke zero halogen (LSZH), 4-pair, UTP, blue copper cable.
NUC6CR04BU-CE^	Category 6, PVC (CM), 4-pair, UTP, blue copper cable.
Category 6 UTP Copper Cable	
NUL6C04BU-CE^	Category 6, low smoke zero halogen (LSZH), 4-pair, UTP, blue copper cable.
NUC6C04BU-CE^	Category 6, PVC (CM), 4-pair, UTP, blue copper cable.
Category 5e UTP Copper Cable	
NUL5C04BU-CE^	Category 5e, low smoke zero halogen (LSZH), 4-pair, UTP, blue copper cable.
NUC5C04BU-CE^	Category 5e, PVC (CM), 4-pair, UTP, blue copper cable.

^For standard colours replace colour suffix BU (Blue) with IG (International Grey)or WH (White).
Please contact Customer Service for additional colours and flame ratings.

NetKey™ Copper Category 6A, 6, 5e, and 3 Jack Modules

- Exceeds all industry performance standards for Category 6A, 6, 5e and 3
- Punchdown jack modules are 100% performance tested and individually serialized for future traceability
- Supports PoE, PoE+, and PoE++
- Snap in and out of keystone openings for easy moves, adds and changes
- Universal label includes T568A and T568B wiring schemes

NK6X88MIW
NK6X88IW-Q

NK6TMIW

NK688MIW
NK688MIW-Q

NKP5E88MIW
NKP5E88MIW -Q

NK5E88MIWY
NK5E88MIW-Q

NK388MIWY

NK366UMIWY

NK366MIWY

Part Number	Description	Colour
NetKey™ Category 6A UTP Jack Modules*		
NK6X88MIW	Category 6A, component compliant, 8-position, 8-wire, keystone punchdown jack module.	Off White.
NK6X88MIW-Q	Category 6A, component compliant, 8-position, 8-wire, keystone punchdown jack module. Convenience pack of 25.	Off White.
NetKey™ Category 6 UTP Jack Modules*		
NK6TMIW	Category 6, 8-position, 8-wire, keystone TP termination style jack module.	Off White.
NK688MIW	Category 6, component-compliant, 8-position, 8-wire, keystone punchdown jack module.	Off White.
NK688MIW-Q	Category 6, component-compliant, 8-position, 8-wire, keystone punchdown jack module. Convenience pack of 25.	Off White.
NetKey™ Category 5e UTP Jack Modules*		
NKP5E88MIW	Category 5e, component-compliant 8-position, 8-wire, keystone punchdown jack module.	Off White.
NKP5E88MIW-Q	Category 5e, component-compliant 8-position, 8-wire, keystone punchdown jack module. Convenience pack of 25.	Off White.
NK5E88MIWY	Category 5e, component-compliant 8-position, 8-wire, keystone leadframe jack module.	Off White.
NK5E88MIW-Q	Category 5e, component-compliant 8-position, 8-wire, keystone leadframe jack module. Convenience pack of 25.	Off White.
NetKey™ Category 3 UTP Jack Modules**		
NK388MIWY	Category 3, 8-position, 8-wire, keystone leadframe jack module.	Off White.
NK366UMIWY	Category 3, 6-position, 6-wire, keystone leadframe jack module. Termination cap color-coded to USOC wiring scheme.	Off White.
NK366MIWY	Category 3, 6-position, 6-wire, keystone leadframe jack module.	Off White.

* For standard colors, replace IW (Off White) with: EI (Electric Ivory), IG (International Gray), WH (White), BL (Black), BU (Blue), RD (Red), YL (Yellow), GR (Green), OR (Orange) or VL (Violet).
** For standard colors, replace IW (Off White) with: EI (Electric Ivory), IG (International Gray), WH (White) or BL (Black).

NetKey™ Copper UTP Patch Cords

- Meet all industry performance standards for Category 6A, 6 and 5e
- 100% performance tested
- Available in a variety of colours and lengths for design flexibility

NK6APC3BU
NK6PC3MBUY

NK5EPC3MBUY

Part Number	Description
Category 6A	
NK6APC3BU	Category 6A, UTP patch cord with modular plugs on each end.
Category 6	
NK6PC3MBUY	Category 6, UTP patch cord with modular plugs on each end.
Category 5e	
NK5EPC3MBUY	Category 5e, UTP patch cord with modular plugs on each end.

^Available in 0.5, 1, 2, 3, 4, 5 metre lengths.
*For standard colours other than Off White, add suffix BL (Black), BU (Blue), RD (Red), YL (Yellow), GR (Green) OR (Orange), VL (Violet) or GY (Grey) before Y in the part number. For example, the part number of a blue, Category 6, 5-metre patch cord is NK6PC5MBUY.

NetKey™ Fibre Optic Patch Cords and Pigtails*

- Compliant with ANSI/TIA 568-C.3-1 and ISO/IEC 11801, TIA-604-5 (FOCIS-5)
- Patch cords and pigtails include OM3 fiber or OM1, OM2, or OS2 fiber in 900µm tight-buffered fiber, 1.6mm or 3.0mm duplex zipcord jacketed cable
- 100% performance tested assures that patch cords and pigtails are standard compliant
- Q.C. identification label quality control reference provides lifetime traceability of test data

LC to LC Patch Cord

SC to SC Patch Cord

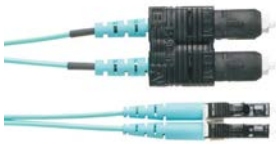

SC to LC Patch Cord

ST to ST Patch Cord

Part Number	Description
LC to LC Patch Cords	
NKFP62ELLLSM001	OM1 2 Fiber 1.6mm LSZH Jacket Patch Cord LC Duplex to LC Duplex - 1 meter
NKFP52ELLLSM001	OM2 2 Fiber 1.6mmLSZH Jacket Patch Cord LC Duplex to LC Duplex - 1 meter
NKFPX2ELLLSM001	OM3 2 Fiber 1.6mm LSZH Jacket Patch Cord LC Duplex to LC Duplex - 1 meter
NKFPZ22LLLSM001	OM4 2 Fiber 2.0mm LSZH Jacket Patch Cord LC Duplex to LC Duplex - 1 meter
NKFP92ELLLSM001	OS2 2 Fiber 1.6mm LSZH Jacket Patch Cord LC Duplex to LC Duplex - 1 meter
LC to LC OM1 and OM2 patch cords are available in lengths of 1-5, 10, 15, 20m. LC to LC OS2 and OM3 patch cords are available in lengths of 1-15, 20, 25, 30, 35, 40, 45, 50m.	
SC to SC Patch Cords	
NKFP623LSSSM001	OM1 2 Fiber 3.0mm LSZH Jacket Patch Cord SC Duplex to SC Duplex - 1 meter
NKFP523LSSSM001	OM2 2 Fiber 3.0mm LSZH Jacket Patch Cord SC Duplex to SC Duplex - 1 meter
NKFPX23LSSSM001	OM3 2 Fiber 3.0mm LSZH Jacket Patch Cord SC Duplex to SC Duplex - 1 meter
NKFP923LSSSM001	OS2 2 Fiber 3.0mm LSZH Jacket Patch Cord SC Duplex to SC Duplex - 1 meter
SC to SC patch cords are available in lengths of 1-5, 10, 15, and 20m.	
SC to LC Patch Cords	
NKFP62ELLSSM001	OM1 2 Fiber 1.6mm LSZH Jacket Patch Cord LC to SC - 1 meter
NKFP52ELLSSM001	OM2 2 Fiber 1.6mm LSZH Jacket Patch Cord LC to SC - 1 meter
NKFPX2ELLSSM001	OM3 2 Fiber 1.6mm LSZH Jacket Patch Cord LC to SC - 1 meter
SC to LC OM1 and OM2 patch cords are available in lengths of 1-5, 10, 15, 20m. SC to LC OS2 and OM3 patch cords are available lengths of 1-15, 20, 25, 30, 35, 40, 45, 50m	
ST to ST Patch Cords	
NKFP623L22SM001	OM1 2 Fiber 3.0mm LSZH Jacket Patch Cord ST to ST - 1 meter
NKFP523L22SM001	OM2 2 Fiber 3.0mm LSZH Jacket Patch Cord ST to ST - 1 meter
NKFPX23L22SM001	OM3 2 Fiber 3.0mm LSZH Jacket Patch Cord ST to ST - 1 meter
NKFP923L22SM001	OS2 2 Fiber 3.0mm LSZH Jacket Patch Cord ST to ST - 1 meter
ST to ST patch cords are available in lengths of 1-5, 10, 15, and 20m.	

*For standard meter lengths other than 1 meter (2, 3, 5 or 10), change the length designation in the part number to the desired length. For example, the part number for a 2 meter, ST to ST, OM1, riser, duplex patch cord is NKFP623R22SM002

NetKey™ Fibre Optic Patch Cords and Pigtails (continued)

LC to Pigtail

SC to pigtail

ST to Pigtail

Part Number	Description
LC Pigtails	
NKFP61BN1NNM001	OM1 1 Fiber 900um Buffered Pigtail LC - 1 Meter
NKFP51BN1NNM001	OM2 1 Fiber 900um Buffered Pigtail LC - 1 Meter
NKFPX1BN1NNM001*	OM3 1 Fiber 900um Buffered Pigtail LC - 1 Meter
NKFPZ1BN1NNM001*	OM4 1 Fiber 900um Buffered Pigtail LC - 1 Meter
NKFP91BN1NNM001*	OS2 1 Fiber 900um Buffered Pigtail LC - 1 Meter
SC Pigtails	
NKFP61BN3NNM001	OM1 1 Fiber 900um Buffered Pigtail SC - 1 Meter
NKFP51BN3NNM001	OM2 1 Fiber 900um Buffered Pigtail SC - 1 Meter
NKFPX1BN3NNM001*	OM3 1 Fiber 900um Buffered Pigtail SC - 1 Meter
NKFP91BN3NNM001*	OS2 1 Fiber 900um Buffered Pigtail SC - 1 Meter
ST Pigtails	
NKFP61BN2NNM001	OM1 1 Fiber 900um Buffered Pigtail ST - 1 Meter
NKFP51BN2NNM001	OM2 1 Fiber 900um Buffered Pigtail ST - 1 Meter
NKFPX1BN2NNM001	OM3 1 Fiber 900um Buffered Pigtail ST - 1 Meter
NKFP91BN2NNM001	OS2 1 Fiber 900um Buffered Pigtail ST - 1 Meter

* 2 meter pigtails available for these parts. For 2 meter configuration, replace last digit with "2". For example, NKFPX-1BN3NNM002.

NetKey Fiber Optic Pigtail Kits

Part Number	Description
LC to pigtail (OS2)	
NKFP91BN1NKM001	NK 1-fiber OS2 LC to pigtail, 900μm tight buffered cable, 1m (12-color pigtail set)
LC to pigtail (OM3)	
NKFPX1BN1NKM001	NK 1-fiber OM3 LC to pigtail, 900μm tight buffered cable, 1m (12-color pigtail set)
LC to pigtail (OM4)	
NKFPZ1BN1NKM001	NK 1-fiber OM4 LC to pigtail, 900μm tight buffered cable, 1m (12-color pigtail set)

NetKey™ Fibre Optic Adapters

NKDLCMIW

NKSCMZIW

NKSTMIW

Part Number	Description	Colour
LC Adapters		
NKDLCMIW	Keystone module supplied with one LC Sr./Jr. SFF multimode duplex adapter with phosphor bronze split sleeves.	Off White
NKDLCMZIW	Keystone module supplied with one LC Sr./Jr. SFF singlemode duplex adapter with zirconia ceramic split sleeves.	Off White
SC Adapters		
NKSCMIW	Keystone module supplied with one SC multimode simplex adapter with phosphor bronze split sleeve.	Off White
NKSCMZIW	Keystone module supplied with one SC singlemode simplex adapter with zirconia ceramic split sleeve.	Off White
ST Adapters		
NKSTMIW	Keystone module supplied with one ST multimode simplex adapter with phosphor bronze split sleeve.	Off White

For standard colours other than IW (Off White), replace suffix with BL (Black), EI (Electric Ivory), IG (International Grey) WH (White) or AQ (Aqua).

NetKey™ Fibre Enclosures

- Factory configured with 6, 12, or 24 duplex LC or SC adapters for fast and easy cabling and installation
- Slide-out drawer slides forward a full 300mm for service access to all fibre terminations, connections and/or splices
- Mounting hardware and fiber routing accessory kit included
- Supports fusion splicing with appropriate slack storage and cable management provisions
- Simple two-piece, all-metal body construction for easy and economical installation with no loose components to misplace; improved protection over plastic fibre drawers

NKFD1W12EIDLC

Part Number	Description
SC Adapters*	
NKFD1W6AQDSC	Pre-loaded fiber drawer with 6 SC aqua duplex adapters
NKFD1W6BLDSC	Pre-loaded fiber drawer with 6 SC black duplex adapters
NKFD1W6EIDSC	Pre-loaded fiber drawer with 6 SC electric ivory duplex adapters
NKFD1W6BUDSCZ	Pre-loaded fiber drawer with 6 SC blue duplex adapters with zirconia ceramic split sleeve

* For a 12 adapter enclosure, replace the 6 with 12.

LC Adapters**	
NKFD1W12AQDLC	Pre-loaded fiber drawer with 12 LC aqua duplex adapters
NKFD1W12BLDLC	Pre-loaded fiber drawer with 12 LC black duplex adapters
NKFD1W12EIDLC	Pre-loaded fiber drawer with 12 LC electric ivory duplex adapters
NKFD1W12BUDLCZ	Pre-loaded fiber drawer with 12 LC blue duplex adapters with zirconia ceramic split sleeve

** For a 24 adapter enclosure, replace the 12 with 24.

NetKey® Patch Panels (continued)

NKPPA24FMY
NKPPA48FMY

NKPP24FMY
NKPP48FMY

SRBM19BLY

TLBP2S-V

Modular Patch Panels

NKFP12W	12-port modular patch panel with front removable faceplate. Mounts to wall with standard 89D bracket (WB89D).
NKFP24Y	24-port modular patch panel with front removable faceplate, 1 RU.
NKMP24Y	24-port flush-mount modular patch panel, 1 RU.
NKFP48Y	48-port modular patch panel with front removable faceplate, 2 RU.
NKMP48Y	48-port flush-mount modular patch panel, 2 RU.
NKPPA24FMY	24-port flush mount angled modular patch panel, 1 RU.
NKPPA48FMY	48-port flush mount angled modular patch panel, 2 RU.
NKPP24FMY	24-port flush mount modular patch panel, 1 RU.
NKPP48FMY	48-port flush mount modular patch panel, 2 RU.
NKPP48HDY	48-port high-density flush-mount patch panel supplied with 6 eight-port rear-mounted faceplates, 1 RU.
NKPPA48HDY	48-port high-density angled flush-mount patch panel supplied with 6 eight-port rear-mounted faceplates, 1 RU

Wall Mount Bracket

WB89D	Wall mount bracket. Ideal for use with 12-port punchdown or modular patch panels.

Strain Relief Bars

SRB19BLY	Strain relief bar extends 2" from standard 19" rack for additional cable support.
SRBM19BLY	Strain relief bar with six Tak-Ty® Hook & Loop Cable Ties; supports, manages, and provides proper bend radius protection for up to 72 cables.

Filler Panels

TLBP1S-V	1 RU tool-less filler panel, 9.52mm (3/8 in.) square holes.
TLBP1R-V	1 RU tool-less filler panel, M5 (#10) or M6 (#12) round tapped holes.
TLBP2S-V	2 RU tool-less filler panel, 9.52mm (3/8 in.) square holes.
TLBP2R-V	2 RU tool-less filler panel, M5 (#10) or M6 (#12) round tapped holes.
CPAF1BLY	1 RU angled filler panel.
CPAF2BLY	2 RU angled filler panel.

Information taken from updated North America line card, NKLC34

NetKey™ Faceplates

- Accept all NetKey™ Modules
- Available in a variety of port densities
- Optional labels for easy port identification

NKFPLUKF2SAW

NKFPLUKF4SAW

NK2HSFIWY

NK4HSFIWY

Part Number	Description	Colour
UK		
NKFPLUKF2SAW	Single gang, 86mm x 86mm, shuttered faceplate with label and icon slots. Accepts two NetKey™ Modules. Includes two M3.5-0.5 x 30mm panhead mounting screws.	Arctic White
NKFPLUKF4SAW	Single gang, 86mm x 86mm, shuttered faceplate with label and icon slots. Accepts four NetKey™ Modules. Includes two M3.5-0.5 x 30mm panhead mounting screws.	Arctic White
Italian		
NK2HSFIWY	Single gang, horizontal, sloped faceplate with labels. Accepts two NetKey™ Modules.	Off White
NK4HSFIWY	Single gang, horizontal, sloped faceplate with labels. Accepts four NetKey™ Modules.	Off White

NetKey™ Faceplate Kits

NKUKS2AW

NKUKS4AW-2G

NKUKS2SAW

NKUKS4SAW-2G

Part Number	Description	Colour
UK		
NKUKS2AW	Single gang, sloped faceplate kit with labels. Kit includes one 86 x 86mm faceplate frame and sloped insert. Accepts two NetKey™ Modules.	Arctic White
NKUKS4AW-2G	Double gang, sloped faceplate kit with labels. Kit includes one 146mm x 86mm faceplate frame and two sloped inserts. Accepts four NetKey™ Modules.	Arctic White
NKUKS2SAW	Single gang, sloped, shuttered faceplate kit with labels. Kit includes one 86mm x 86mm faceplate frame and one sloped, shuttered insert. Accepts two NetKey™ Modules.	Arctic White
NKUKS4SAW-2G	Double gang, sloped, shuttered faceplate kit with labels. Kit includes one 146mm x 86mm faceplate frame and two sloped, shuttered inserts. Accepts four NetKey™ Modules.	Arctic White

NetKey™ Faceplate Kits (continued)

NKFS2AW

NKFS2SAW

NKAGS2AW

NKAGS2SAW

NKDS2EW

NKDS2SEW

NKFD66S2SEW

NKLKCLS2EW

NKLKCLS2SEW

Part Number	Description	Colour
French, Spanish, Belgian and Portuguese		
NKFS2AW	Single gang, sloped faceplate kit. Kit includes one 45mm x 45mm faceplate frame and one sloped insert. Accepts two NetKey™ Modules.	Arctic White
NKFS2SAW	Single gang, sloped, shuttered faceplate kit. Kit includes one 45mm x 45mm faceplate frame and one sloped, shuttered insert. Accepts two NetKey™ Modules.	Arctic White
German, French, Spanish, Portuguese and Danish		
NKAGS2AW	Single gang, sloped faceplate kit with labels. Kit includes one 50mm x 50mm faceplate frame and one sloped insert. Accepts two NetKey™ Modules.	Arctic White
NKAGS2SAW	Single gang sloped, shuttered faceplate kit with labels. Kit includes one 50mm x 50mm faceplate frame and one sloped, shuttered insert. Accepts two NetKey™ Modules.	Arctic White
Danish		
NKDS2EW	Single gang, sloped, faceplate kit with labels. Kit includes one 71.1mm x 50.4mm faceplate frame and one sloped insert. Accepts two NetKey™ Modules.	European White
NKDS2SEW	Single gang, sloped, shuttered faceplate kit with labels. Kit includes one 71.1mm x 50.4mm faceplate frame and one sloped insert. Accepts two NetKey™ Modules.	European White
NKFD66S2SEW	Single gang, sloped, shuttered faceplate kit. Compatible with LK Opus 66* frame. Kit includes one 58.8mm x 58.8mm faceplate frame and one sloped, shuttered insert. Ideal for in-wall and surface mount box installations. Accepts two NetKey™ Modules.	European White
NKLKCLS2EW	Single gang, sloped, faceplate kit with labels. Compatible with LK Clic'line* frame. Kit includes one 71.3mm x 45mm faceplate frame and one sloped insert. Accepts two NetKey™ Modules.	European White
NKLKCLS2SEW	Single gang, sloped, shuttered, faceplate kit with labels. Compatible with LK Clic'line* frame. Kit includes one 71.3mm x 45mm face-plate frame and one sloped, shuttered insert. Accepts two NetKey™ Modules.	European White

*Opus 66 and Clic'line are trademarks of Lauritz Knudsen.

NetKey™ Inserts, Frames and Adapters

NKHS2AW-X

NKHS2SAW-X

CBUKAWY

CBUKAW-2GY

CBAGAW

FCFPAW

CBFAW

NKBTAL1WH-X

NKBTA1WH-X

NKFA1SAW-X

NK6CSSAW-X

NK6CSAW-X

Part Number	Description	Colour
Inserts		
NKHS2AW-X	1/2 size, sloped modular insert. Accepts two NetKey™ Modules.	Arctic White
NKHS2SAW-X	1/2 size, sloped, shuttered modular insert. Accepts two NetKey™ Modules.	Arctic White
Frames		
CBUKAWY	86mm x 86mm, single gang faceplate frame with label. Accepts one 1/2 size module insert.	Arctic White
CBUKAW-2GY	86mm x 146mm, double gang faceplate frame with labels. Accepts two 1/2 size module inserts.	Arctic White
CBAGAW	50mm x 50mm, single gang faceplate frame with labels. Accepts one 1/2 size module insert.	Arctic White
FCFPAW	80mm x 80mm, faceplate frame accepts all 50mm x 50mm adapters.	Arctic White
Adapters		
CBFAW	45mm x 45mm adapter, accepts one 1/2 size module insert.	Arctic White
NKBTAL1WH-X	Adapter with label pocket accepts one NetKey™ module, for Bticino Light series faceplates.	White
NKBTA1WH-X	Adapter accepts one NetKey™ module, for Bticino Living International series faceplates.	White
NKFA1SAW-X	22.5mm x 45mm 1-Position Shuttered Adapter with label accepts one NetKey™ module.	Off White
NK6CSSAW-X	Sloped, shuttered module snaps into standard UK LJU6C floor box mounting plates, faceplates and patch panels and accepts one Net-Key™ Module.	Off White
NK6CSAW-X	Single gang, 25.4mm x 32mm, shuttered adapter. Compatible with LJU6C frame. Accepts one NetKey™ Module.	Arctic White

*For standard colours other than White, replace WH in part number with BL (Black) or IW (Off White).

NetKey™ Modular Furniture Faceplate

Part Number	Description	Colour
NK4MFIW	Snap-on modular furniture faceplate. Compatible with modular furniture panel cutout dimensions 34mm to 35.56mm – 67mm to 69mm. Accepts up to four NetKey™ Modules.	Off White
NK4MFABL	Snap-on 4-port sloped modular furniture faceplate. Compatible with modular furniture panel cutout dimensions 34mm to 35.56mm – 67mm to 69mm. Accepts up to four NetKey™ Modules.	Black

For standard colours other than Off White, replace IW in part number with AW (Arctic White), BL (Black), EI (Electric Ivory), WH (White) or IG (International Grey).

NetKey™ Surface Mount Boxes

- Accept all NetKey™ Modules
- Include mounting screws and adhesive tape
- Compatible with Panduit™ LD3, LD5, and LD10 Raceway

NK2BXIW-A

NK4BXIW-AY

NK6BXIW-AY

CBM-X

Part Number	Description	Colour
NK2BXIW-A	Surface mount box accepts two NetKey™ Modules.	Off White
NK4BXIW-AY	Surface mount box accepts four NetKey™ Modules.	Off White
NK6BXIW-AY	Surface mount box accepts six NetKey™ Modules.	Off White
CBM-X	Optional magnet for mounting on metal surfaces. Compatible with NK2BXIW-A and NK4BXIW-AY.	—

For surface mount box standard colours other than IW (Off White), replace suffix with AW (Arctic White), EI (Electric Ivory), IG (International Grey) or WH (White).

NetKey™ Audio/Video Modules and Inserts

NKFIW

NKBNCMIWY

NKRSMBIWY

NKRTMRIW

NKRPMRIW

NKSPMIW

NKSVCIW

NKBPBIWY

NK35MSSIW

NK35MSCIW

Part Number	Description	Colour
F-Type Module		
NKFIW	Keystone module supplied with F-type 3 GHz coupler.	Off White
50 Ohm BNC Coax Module		
NKBNCMIWY	Keystone module supplied with 50 ohm industry standard coax bulkhead coupler.	Off White
RCA Modules		
NKRSMRIWY	Keystone module supplied with RCA solder type connector. Inserts available in multiple colours.	Off White
NKRTMBIW	Keystone module supplied with RCA pass-through connector. Inserts available in multiple colours.	Off White
NKRPMRIW	Keystone module supplied with RCA punchdown connector. Inserts available in multiple colours.	Off White
S-Video Modules		
NKSPMIW	Keystone module supplied with SVHS punchdown connector.	Off White
NKSVCIW	Keystone module supplied with S-Video pass-through connector.	Off White
5-Way Binding Post Module		
NKBPBIWY	Keystone module supplied with 5-way binding post.	Off White
3.5mm Stereo Connector		
NK35MSSIW	Keystone module supplied with 3.5mm (1/8") stereo solder type headset connector.	Off White
NK35MSCIW	Keystone module supplied with 3.5mm (1/8") stereo headset coupler.	Off White

^For RCA modules, replace second R (red), with B (black), Y (yellow), or W (white) for alternate insert colors.
^^For alternate color, replace second B (Black) with R (Red).
For standard colours other than IW (Off White), replace suffix with AW (Arctic White), EI (Electric Ivory), WH (White), IG (International Grey) or BL (Black). 5-Way Binding Post Module (NKBP^IWY) only available in EI (Electric Ivory) and WH (White).

NetKey™ Audio/Video Modules and Inserts (continued)

NKHDMIIW

NKUSBAAIW

NKBMIW-X

CHR3RGBIW

CHD9CIWY

Part Number	Description	Colour
HDMI Coupler		
NKHDMIIW	Keystone module supplied with one HDMI 2.0 Type A female to female coupler module.	Off White
USB Coupler		
NKUSBAAIW	Keystone module supplied with one USB 2.0 female A to female A coupler module.	Off White
Blank Module		
NKBMIW-X	Blank keystone module reserves space for future use.	Off White
RCA Inserts		
CHR3RGBIW	1/3 insert supplied with three RCA pass-through couplers. Inserts are red, green and blue. Ideal for component video.	Off White
CHR3WYRIW	1/3 insert supplied with three RCA pass-through couplers. Inserts are white, yellow and red. Ideal for composite video or left/right stereo.	Off White
D-Subminiature Inserts		
CHD9CIWY	1/3 insert supplied with 9-pin female to female coupler.	Off White
CHD15HDCIWY	1/3 insert supplied with 15-pin female to female coupler.	Off White
CHD15HDSCIWY	1/3 insert supplied with 15-pin HD screw down DB connector mounted to printed circuit board. SVGA compatible.	Off White

^For RCA modules, replace second R (red), with B (black), Y (yellow), or W (white) for alternate insert colors.
^^For alternate color, replace second B (Black) with R (Red).
For standard colours other than IW (Off White), replace suffix with AW (Arctic White), EI (Electric Ivory), WH (White), IG (International Grey) or BL (Black). 5-Way Binding Post Module (NKBP^IWY) only available in EI (Electric Ivory) and WH (White).

Termination Tools

PDT110

NKSPB

CJT

JR-PAN-2

CGJT

Part Number	Description
Pan-Punch™ Termination Tool	
PDT110	Single pair punchdown tool and blade terminates and cuts UTP cable in one operation. Ideal for use with Pan-Punch™ Punchdown System.
PDTH110	Replacement blade for single pair punchdown tool (PDT110).
NetKey™ Jack Module Termination Tools	
JR-PAN-2*	Fluke** JackRapid Termination Tool for Category 6 and Category 5e NetKey™ Punchdown Modules.
CJT-X	Termination tool for Category 3 NetKey™ Leadframe Jack Modules.
CGJT	Terminates Giga-TXTM TP style jack modules.
Punchdown Base	
NKSPB	Base used to assist in terminating punchdown modules.

*Fluke JackRapid Termination Tool available through distribution.
Visit www.fluke.com to locate a local distributor.
**Fluke is a registered trademark of Fluke Corporation.

Identification and Labeling Systems

- Variety of labelling systems and labels enable quick and easy network identification

LS8EQ-KIT

LS8EQ

LS8E

LS8E-KIT

TDP43ME

S100X150VAC
and
S100X150VA1Y

Part Number	Description
PanTher™ LS8EQ and Cougar™ LS9Q Hand-Held Thermal Transfer Printers	
LS8EQ-KIT-ACE	Includes LS8EQ hand-held printer with QWERTY keypad, PANTHERLINK Software, one cassette of S100X150VAC self-laminating labels, six AA alkaline batteries, LS8-CASE, LS8-PCKIT, LS8-IB, LS8-WS, quick reference card, and operator's manual and AC power adapter for Europe.
LS8EQ-KIT	Includes LS8EQ hand-held printer with QWERTY keypad, PANTHERLINK Software, one cassette of S100X150VAC self-laminating labels, six AA alkaline batteries, LS8-CASE, LS8-PCKIT, LS8-IB, LS8-WS, quick reference card, and operator's manual.
LS8EQ	Includes hand-held printer with QWERTY keypad, PANTHERLINK™ Software, one cassette of S100X150VAC self-laminating labels, six AA alkaline batteries, and quick reference card.
PanTher™ LS8E Hand-Held Thermal Transfer Printer and Accessories	
LS8E	LS8E printer, one cassette of self-laminating labels, six AA alkaline batteries and quick reference card.
LS8E-KIT	LS8E printer, one cassette of self-laminating labels, six AA alkaline batteries, rigid carrying case, LS8-PCKIT, LS8-IB, operator's manual and quick reference card.
S100X150VAC	Self-laminating, white vinyl label for use with LS8E printer.
Thermal Transfer Desktop Printer and Accessories	
TDP43ME/E	300 dpi printer; includes printer, Panduit® Easy-Mark Labeling Software, RMEH4BL hybrid black ribbon, USB cable, user manual, quick start card, driver disk, and the following power cords: EuroPlug, Swiss, UK, and Japan JIS 8303 3-pin; for use outside N.A.
S100X150VA1Y	Self-laminating, white vinyl label for use with thermal transfer desktop printer.

For complete identification offering, reference the Panduit Physical Infrastructure Systems Catalogue (SA-NCCB51) or visit www.panduit.com.

Racks and Cable Management

- Cable management products and accessories maintain bend radius control and cable performance while bundling and securing cable to prevent snags and stress from over bending

ER4P23

WMPV45E

WMPSE

WMP1E

CMPH1

CMPH2

CMPHF1

SRM19FM1

SRM19FM2

RGS134-1Y

RGS134-10-1Y

RGCBNJ660P22

Part Number	Description
ER4P23	4 post EIA rack with #12-24 threaded rails. Dimensions: 2134mm X 515mm X 584mm (84.0"H X 20.3"W X 23.0"D)
WMPV45E	NetRunner™ Front and Rear Vertical Cable Manager with dual hinged cover, wire retainers and side mount brackets. 45 RU.
WMPSE	PatchLink™ Front and Rear Horizontal Cable Manager with dual hinged cover. 1 RU.
WMP1E	PatchLink™ Front and Rear Horizontal Cable Manager with dual hinged cover. 2 RU.
CMPH1	OpenAccess™ Front and Rear Horizontal Cable Manager with optional snap on cover. 1 RU.
CMPH2	OpenAccess™ Front and Rear Horizontal Cable Manager with optional snap on cover. 2 RU.
CMPHF1	OpenAccess™ Front Only Horizontal Cable Manager with optional snap on cover. 1 RU.
SRM19FM1	Rack mount shelve, 13.6 kg capacity, 1 RU.
SRM19FM2	Rack mount shelve, 22.6 kg capacity, 2 RU.
RGS134-1Y	Rack grounding strip (1.9m length, 17mm width, 1.27mm thickness). Provided with 5cc of antioxidant, one grounding sticker, and three each M6 x 12mm and #12-24 x 1/2" thread-forming screws.
RGS134-10-1Y	10 rack grounding strips (1.9m length, 17mm width, 1.27mm thickness). Provided with 5cc of antioxidant, one grounding sticker, and 30 each M6 x 12mm and #12-24 x 1/2" thread forming screws.
RGCBNJ660P22	Common bonding network to rack jumper kit. Provided with HTAP that bonds to MCBN sizes ranging from 16mm^2 - 25mm^2.

For complete cable management and bonding/grounding offering, reference the Panduit Physical Infrastructure Systems Catalogue (SA-NCCB51) or visit www.panduit.com.

Coax RG-6, Quad Shield

CM, CMR, CMP

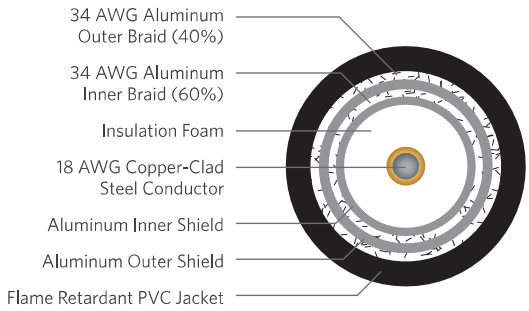

PRODUCT DESCRIPTION

Superior Essex RG-6, Quad Shield coaxial cables are designed to support technologies such as extended bandwidth satellite service, high definition TV signals, CATV and two-way cable modems. Superior Essex maintains tight tolerances to cable diameter requirements of leading connector manufacturers.

APPLICATIONS

- HDTV and CATV
- Two-way cable modems
- Extended bandwidth satellite service

FEATURES	BENEFITS
RG-6, Quad Shield Coaxial cable with bandwidth that exceeds 3 GHz	"Future-proofing" the installation. Supports extended bandwidth satellite service and high-definition TV signals
Tight foamed polyethylene (CM and CMR) or fluoropolymer (CMP) insulating skin bonds around center conductor	Exhibits better transmission characteristics
Black and white jacket colors available for CM, CMR and CMP versions	Helps differentiate incoming service versus internal cabling infrastructure

SPECIFICATIONS

Conductor	Copper clad steel
AWG (mm)	18 (1.02)
Inner Shield	CM/CMR: 2.8 mil aluminum foil CMP: Aluminum/polyester/aluminum
Inner Braid	34 AWG aluminum (60%)
Outer Shield	CM/CMR: 1.8 mil aluminum foil CMP: Aluminum/polyester/aluminum
Outer Braid	34 AWG aluminum (40%)
Insulation	CM/CMR: Polyethylene CMP: FEP
Jacket	PVC (polyvinyl chloride)
Nominal Impedance Ohms	75
Nominal Velocity of Propagation %	CM/CMR: 85 CMP: 80
Performance Compliance	UL® 13 UL 444 CSA C22.2 No. 214-08 UL 1685 UL 1666 NFPA 262 RoHS-compliant/RoHS 2-compliant
NRTL Programs	UL, c(UL) Listed CM UL, c(UL) Listed CMR UL, c(UL) Listed CMP

UL is a registered trademark of UL LLC.

PART NUMBERS AND PHYSICAL CHARACTERISTICS

Listing	Part Number	Component Jacket Color	Nominal Diameter Overall in (mm)	Nominal Diameter Dielectric in (mm)	Nominal Diameter Shield in (mm)	Approx. Weight lbs/kft (kg/km)	Package	Packages per Pallet
CM	78-147-91	White	0.30 (7.5)	0.18 (4.6)	0.19 (4.8)	29 (43)	1,000' Plywood reel	27
CM	79-147-91	Black	0.30 (7.5)	0.18 (4.6)	0.19 (4.8)	29 (43)	1,000' Plywood reel	27
CM	78-147-9P	White	0.30 (7.5)	0.18 (4.6)	0.19 (4.8)	29 (43)	1,000' POP™ box	20
CM	79-147-9P	Black	0.30 (7.5)	0.18 (4.6)	0.19 (4.8)	29 (43)	1,000' POP box	20
CMR	78-148-91	White	0.30 (7.5)	0.18 (4.6)	0.19 (4.8)	30 (45)	1,000' Plywood reel	27
CMR	79-148-91	Black	0.30 (7.5)	0.18 (4.6)	0.19 (4.8)	30 (45)	1,000' Plywood reel	27
CMP	78-14C-91	White	0.26 (6.7)	0.17 (4.3)	0.23 (5.9)	30 (45)	1,000' Plywood reel	25
CMP	78-14C-9P	White	0.26 (6.7)	0.17 (4.3)	0.22 (5.5)	32 (47)	1,000' POP box	36
CMP	79-14C-91	Black	0.26 (6.7)	0.17 (4.3)	0.23 (5.9)	30 (45)	1,000' Plywood reel	25

SUPERIOR ESSEX
800.551.8948
SuperiorEssexCommunications.com
*All information, content, data, specifications, packaging and part numbers detailed herein are subject to change. For the most up-to-date information, please visit SuperiorEssexCommunications.com. Purchase of this product is subject exclusively to the then current **Superior Essex International LP Terms and Conditions of Sale for Communications Cable, Wire and Connectivity Products**, which can be found on our website, SuperiorEssexCommunications.com, or provided to you upon request.*
Rev 06/18
Ed 13.3

ELECTRICAL SPECIFICATIONS

Frequency MHz	CM/CATV and CMR/CATVR Attenuation Maximum Specification dB/100 ft (dB/100 m)	CM/CATV and CMR/CATVR Attenuation Maximum Typical dB/100 ft (dB/100 m)	CM/CATV and CMR/CATVR SRL, Typical dB
55	1.6 (5.3)	1.3 (4.8)	20
211	3.1 (10.1)	2.7 (9.0)	20
270	3.5 (11.5)	3.1 (10.3)	20
300	3.7 (12.1)	3.4 (11.0)	20
330	3.9 (12.8)	3.6 (11.7)	20
400	4.3 (14.1)	4.0 (13.1)	20
450	4.6 (15.0)	4.1 (13.6)	20
550	5.1 (16.7)	4.7 (15.3)	20
750	6.0 (19.7)	5.2 (17.1)	20
870	6.5 (21.3)	6.0 (19.7)	20
1000	7.0 (23.0)	6.5 (21.2)	20
1200		7.2 (23.7)	18
1450		8.0 (26.1)	18
1800		8.8 (29.0)	18
2200		9.8 (32.1)	18
2600		10.7 (35.2)	15
3000		11.7 (38.3)	15

Frequency MHz	CMP/CL2P Attenuation, Nominal dB/100 ft (dB/100 m)	CMP/CL2P SRL, Nominal dB
1	0.50 (1.64)	10
3.6	0.78 (2.56)	10
10	0.94 (3.08)	10
50	1.93 (6.33)	10
71.5	2.32 (7.61)	10
100	2.74 (8.99)	10
135	3.19 (10.47)	10
200	3.89 (12.76)	10
360	5.22 (17.13)	10
540	6.19 (20.31)	10
720	7.72 (25.33)	10
900	9.01 (29.56)	10
1000	9.61 (31.53)	10
1450	12.40 (40.68)	10
1800	14.36 (47.11)	10
2000	15.50 (50.85)	10
2250	16.96 (55.64)	10
3000	20.76 (68.11)	10

*All information, content, data, specifications, packaging and part numbers detailed herein are subject to change. For the most up-to-date information, please visit SuperiorEssexCommunications.com. Purchase of this product is subject exclusively to the then current **Superior Essex International LP Terms and Conditions of Sale for Communications Cable, Wire and Connectivity Products**, which can be found on our website, SuperiorEssexCommunications.com, or provided to you upon request.*

Coax RG-11, Quad Shield

CMR, CMP

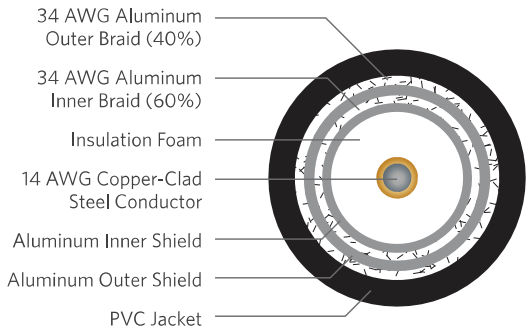

PRODUCT DESCRIPTION

Superior Essex RG-11, Quad Shield coaxial cables are designed to support technologies such as extended bandwidth satellite service, high definition TV signals, CATV and two-way cable modems. Superior Essex maintains tight tolerances to cable diameter requirements of leading connector manufacturers.

APPLICATIONS

- HDTV, CATV
- Two-way cable modems
- Extended bandwidth satellite service

FEATURES	BENEFITS
RG-11, Quad Shield Coaxial cable with bandwidth that exceeds 3 GHz	"Future-proofing" the installation. Supports extended bandwidth satellite service and high-definition TV signals
Tight foamed polyethylene (CM and CMR) or fluoropolymer (CMP) insulating skin bonds around center conductor	Exhibits better transmission characteristics
Black and white jacket colors available for CMR and CMP versions	Helps differentiate incoming service versus internal cabling infrastructure
Interlock armored version	Provides additional mechanical and fire safety protection

SPECIFICATIONS

Conductor	Copper clad steel
AWG (mm)	14 (1.62)
Inner Shield	Aluminum/Poly Tape
Inner Braid	34 AWG aluminum (60%)
Outer Shield	Aluminum/Poly Tape
Outer Braid	34 AWG aluminum (40%)
Insulation	CMR: Foam PE CMP: FEP
Jacket	PVC (polyvinyl chloride)
Nominal Impedance Ohms	75
Nominal Velocity of Propagation %	CMR: 84 CMP: 84
Performance Compliance	UL® 13 UL 444 CSA C22.2 No. 214-08 UL 1685 UL 1666 NFPA 262 RoHS-compliant/RoHS 2-compliant
NRTL Programs	UL, c(UL) Listed CMR UL, c(UL) Listed CMP

UL is a registered trademark of UL LLC.

PART NUMBERS AND PHYSICAL CHARACTERISTICS

Listing	Part Number	Component Jacket Color	Nominal Diameter Overall in (mm)	Nominal Diameter Dielectric in (mm)	Nominal Diameter Shield in (mm)	Approx. Weight lbs/kft (kg/km)	Package	Packages per Pallet
CMR	79-348-91	Black	0.41 (10.3)	0.28 (7.11)	0.33 (8.6)	56 (85)	1,000' Plywood reel	24
CMR	78-348-91	White	0.41 (10.3)	0.28 (7.11)	0.33 (8.6)	56 (85)	1,000' Plywood reel	24
CMP	78-34C-91	White	0.37 (9.6)	0.28 (7.11)	0.33 (8.6)	67 (100)	1,000' Plywood reel	36

SUPERIOR ESSEX
800.551.8948
SuperiorEssexCommunications.com
*All information, content, data, specifications, packaging and part numbers detailed herein are subject to change. For the most up-to-date information, please visit SuperiorEssexCommunications.com. Purchase of this product is subject exclusively to the then current **Superior Essex International LP Terms and Conditions of Sale for Communications Cable, Wire and Connectivity Products**, which can be found on our website, SuperiorEssexCommunications.com, or provided to you upon request.*
Rev 06/18
Ed 13.3

ELECTRICAL SPECIFICATIONS

CMR

Frequency MHz	Attenuation Maximum Specification dB/100 ft (dB/100 m)	SRL, Typical dB
5	0.38 (1.25)	20
55	0.96 (3.15)	20
211	2.13 (6.99)	20
350	2.42 (7.94)	
550	3.04 (9.97)	
750	3.65 (11.97)	
870	4.06 (13.32)	
1000	4.35 (14.27)	
1450	5.29 (17.35)	
3000	7.81 (25.62)	

CMP/CL2P

Frequency MHz	Attenuation, Nominal Specification dB/100 ft (dB/100 m)	SRL, Nominal dB
1	0.25 (0.82)	20
10	0.80 (2.62)	20
50	1.20 (3.93)	20
100	1.70 (5.57)	20
200	2.50 (8.20)	20
400	3.60 (11.80)	
700	5.10 (16.72)	
900	6.00 (19.67)	
1000	6.50 (21.31)	
1450	8.00 (26.23)	
1800	9.10 (29.84)	
2200	10.10 (33.11)	
3000	12.00 (39.34)	

*All information, content, data, specifications, packaging and part numbers detailed herein are subject to change. For the most up-to-date information, please visit SuperiorEssexCommunications.com. Purchase of this product is subject exclusively to the then current **Superior Essex International LP Terms and Conditions of Sale for Communications Cable, Wire and Connectivity Products**, which can be found on our website, SuperiorEssexCommunications.com, or provided to you upon request.*

Indoor 5-1000 MHz Taps

DGT Series

DGT

DGT-2

DGT-4

DGT-8

❍ Features & Benefits

- 1, 2, 4 and 8 Port Models with 5-1000 MHz Bandwidth
- -60 dBmV Spurious Signals and 2nd Order Harmonics with a +55 dBmV Return Input Carrier
- Category A3 Standard 6 KV, 100 kHz Ring Wave Surge Withstand Capability on All Ports
- -120 dB RFI, Solder Back Design
- Machine Threaded Flat F Ports
- Compliant with SCTE Splitter Guidelines
- Zinc Alloy Die-Cast Housing

❍ Specifications

DGT (1Port)(dB)	6	8	10	12	14	16	18	20	24	30
Insertion Loss										
5-15 MHz:	1.8 ± 0.3	1.6 ± 0.3	1.3 ± 0.3	1.0 ± 0.3	1.0 ± 0.3	1.0 ± 0.3	1.0 ± 0.3	1.0 ± 0.3	1.0 ± 0.3	1.0 ± 0.3
15-42 MHz:	1.9 ± 0.3	1.5 ± 0.3	1.4 ± 0.3	1.1 ± 0.3	1.0 ± 0.3	0.9 ± 0.3	0.9 ± 0.3	0.9 ± 0.3	0.9 ± 0.3	0.9 ± 0.3
43-550 MHz:	2.3 ± 0.3	1.85 ± 0.3	1.6 ± 0.3	1.2 ± 0.3	1.2 ± 0.3	1.1 ± 0.3	1.1 ± 0.3	1.1 ± 0.3	1.1 ± 0.3	1.1 ± 0.3
551-1000 MHz:	2.7 ± 0.3	2.5 ± 0.5	1.8 ± 0.5	1.2 ± 0.3	1.4 ± 0.3	1.3 ± 0.3	1.3 ± 0.3	1.3 ± 0.3	1.3 ± 0.3	1.3 ± 0.3
Return Loss In/Out (dB min)										
5-15 MHz:	16	18	18	18	18	18	18	18	18	18
15-42 MHz:	18	18	20	20	20	20	20	20	20	20
43-550 MHz:	18	20	20	20	18	18	18	18	18	18
551-1000 MHz:	18	18	18	18	18	18	18	18	18	18
Return Loss Tap (dB min)										
5-15 MHz:	18	18	18	18	18	18	18	18	18	18
15-42 MHz:	20	20	20	20	20	20	20	20	20	20
43-550 MHz:	20	20	20	20	18	20	20	20	20	20
551-1000 MHz:	18	18	18	18	18	18	18	18	18	18
Isolation Tap-Out (dB min)										
5-15 MHz:	23	23	24	28	30	31	35	35	39	40
15-42 MHz:	23	23	25	25	25	30	31	32	36	36
43-550 MHz:	20	20	22	22	22	26	26	28	30	34
551-1000 MHz:	20	20	20	20	20	21	23	25	28	32
Tap Loss (dB)										
5-1000 MHz:	6.5 ± 1.5	8 ± 1.5	10 ± 1.5	12 ± 1.5	14 ± 1.5	16 ± 1.5	18 ± 1.5	20 ± 1.5	24 ± 1.5	30 ± 1.5

❍ Specifications

DGT-2 (2 Port)(dB)	8	10	12	14	16	18	20	24
Insertion Loss								
5-15 MHz:	3.5 ± 0.3	2.0 ± 0.3	1.9 ± 0.3	1.5 ± 0.3	0.8 ± 0.3	0.7 ± 0.3	0.7 ± 0.3	0.7 ± 0.3
15-42 MHz:	3.4 ± 0.3	1.9 ± 0.3	1.5 ± 0.3	1.3 ± 0.3	0.7 ± 0.3	0.6 ± 0.3	0.6 ± 0.3	0.6 ± 0.3
43-550 MHz:	3.6 ± 0.3	2.0 ± 0.3	1.9 ± 0.5	1.4 ± 0.3	1.1 ± 0.3	0.8 ± 0.3	0.8 ± 0.3	0.8 ± 0.3
551-1000 MHz:	4.2 ± 0.3	2.5 ± 0.3	2.2 ± 0.5	1.7 ± 0.3	1.3 ± 0.3	1.0 ± 0.3	1.0 ± 0.3	1.0 ± 0.3
Return Loss In/Out (dB min)								
5-15 MHz:	18	18	18	18	18	18	18	18
15-42 MHz:	18	18	18	18	19	20	20	20
43-550 MHz:	18	20	20	20	20	20	20	20
551-1000 MHz:	18	18	18	18	18	18	18	18
Return Loss Tap (dB min)								
5-15 MHz:	18	18	18	18	18	18	18	18
15-42 MHz:	18	18	18	18	19	20	20	20
43-550 MHz:	18	20	20	20	20	20	20	20
551-1000 MHz:	18	18	18	18	18	18	18	18
Isolation Tap-Out (dB min)								
5-15 MHz:	28	28	30	30	30	30	32	34
15-42 MHz:	28	28	30	30	30	30	32	34
43-550 MHz:	26	26	26	26	28	28	28	33
551-1000 MHz:	22	22	22	22	23	23	25	29
Isolation Tap-Tap (dB min)								
5-15 MHz:	20	20	20	20	20	20	20	20
15-42 MHz:	22	22	22	24	22	22	22	22
43-550 MHz:	22	22	22	22	22	22	22	22
551-1000 MHz:	20	20	20	20	20	20	20	20
Tap Loss (dB)								
5-1000 MHz:	8.0 ± 1.5	10 ± 1.5	12 ± 1.5	14 ± 1.5	16 ± 1.5	18 ± 1.5	20 ± 1.5	24 ± 1.5

DGT-4 (4 Port)(dB)	10	12	14	16	17	18	20	24
Insertion Loss								
5-15 MHz:	3.5 ± 0.3	3.5 ± 0.3	2.0 ± 0.3	1.3 ± 0.3	1.3 ± 0.3	1.0 ± 0.3	0.8 ± 0.3	0.7 ± 0.3
15-42 MHz:	3.7 ± 0.3	3.7 ± 0.3	1.9 ± 0.3	1.2 ± 0.3	1.2 ± 0.3	1.0 ± 0.3	0.6 ± 0.3	0.6 ± 0.3
43-550 MHz:	3.9 ± 0.3	3.9 ± 0.3	2.0 ± 0.5	1.5 ± 0.3	1.5 ± 0.3	1.2 ± 0.3	0.8 ± 0.3	0.8 ± 0.3
551-1000 MHz:	4.2 ± 0.3	4.2 ± 0.3	2.5 ± 0.5	1.9 ± 0.3	1.9 ± 0.3	1.5 ± 0.3	1.0 ± 0.3	1.0 ± 0.3
Return Loss In/Out (dB min)								
5-15 MHz:	16	16	16	16	16	18	18	18
15-42 MHz:	16	16	16	16	16	18	18	18
43-550 MHz:	18	18	16	20	18	18	18	18
551-1000 MHz:	18	18	16	18	18	18	18	18
Return Loss Tap (dB min)								
5-15 MHz:	18	18	18	18	18	18	18	18
15-42 MHz:	18	18	18	18	18	18	18	18
43-550 MHz:	18	18	18	18	18	18	18	18
551-1000 MHz:	18	18	18	18	18	18	18	18
Isolation Tap-Out (dB min)								
5-15 MHz:	24	24	27	30	28	30	30	36
15-42 MHz:	24	24	27	28	28	20	20	35
43-550 MHz:	22	22	24	26	24	28	28	30
551-1000 MHz:	20	20	21	23	21	24	25	29
Isolation Tap-Tap (dB min)								
5-15 MHz:	20	20	20	20	20	20	20	20
15-42 MHz:	20	20	20	20	20	20	20	20
43-550 MHz:	22	22	22	24	24	24	24	24
551-1000 MHz:	20	20	20	20	20	20	20	20
Tap Loss (dB)								
5-1000 MHz:	10.5 ± 1.5	12 ± 1.5	14 ± 1.5	16 ± 1.5	17 ± 1.5	18 ± 1.5	20 ± 1.5	24 ± 1.5

❍ Specifications

DGT-8 (8 Port)

Insertion Loss (dB)	11	14	17	20	23	27
5-15 MHz:	NA	5.1 ± 0.3	3.4 ± 0.3	1.0 ± 0.3	0.5 ± 0.3	0.5 ± 0.3
15-42 MHz:	NA	5.1 ± 0.3	3.4 ± 0.3	1.0 ± 0.3	0.6 ± 0.3	0.6 ± 0.3
43-550 MHz:	NA	5.5 ± 0.3	4.0 ± 0.3	1.5 ± 0.3	1.0 ± 0.3	1.0 ± 0.3
551-1000 MHz:	NA	6.0 ± 0.5	4.2 ± 0.5	2.0 ± 0.5	1.6 ± 0.5	1.2 ± 0.5
Return Loss In/Out (dB min)						
5-15 MHz:	18	18	18	18	18	18
15-42 MHz:	18	18	18	18	18	18
43-550 MHz:	18	18	18	18	18	18
551-1000 MHz:	18	18	18	18	18	18
Return Loss Tap (dB min)						
5-15 MHz:	18	18	18	18	18	18
15-42 MHz:	18	18	18	18	18	18
43-550 MHz:	18	18	18	18	18	18
551-1000 MHz:	18	18	18	18	18	18
Isolation Tap-Out (dB min)						
5-15 MHz:	NA	25	25	25	25	25
15-42 MHz:	NA	25	25	25	25	30
43-550 MHz:	NA	25	25	25	25	25
551-1000 MHz:	NA	25	26	26	26	26
Isolation Tap-Tap (dB min)						
5-15 MHz:	23	23	25	25	25	25
15-42 MHz:	23	23	25	25	25	25
43-550 MHz:	22	22	22	22	22	22
551-1000 MHz:	20	22	22	22	22	22
Tap Loss (dB)						
5-1000 MHz:	11.5 ± 1.5	14 ± 1.5	17 ± 1.5	20 ± 1.5	23 ± 1.5	27 ± 1.5

❍ Ordering Information

Model	Stock No.	Description
DGT	1955	Directional Tap, 1 Output, Low Intermod., 5-1000 MHz, Values: 6, 8, 10, 12, 14, 16, 18, 20, 24, 30
DGT-2	1956	Directional Tap, 2 Output, Low Intermod., 5-1000 MHz, Values: 8, 10, 12, 14, 16, 18, 20, 24
DGT-4	1957	Directional Tap, 4 Output, Low Intermod., 5-1000 MHz, Values: 10, 12, 14, 16, 18, 20, 24
DGT-8	1958	Directional Tap, 8 Output, Low Intermod., 5-1000 MHz, Values: 11, 14, 17, 20, 23, 27

PANDUIT™

Panduit Corp.
World Headquarters
Tinley Park, IL 60487

800.777.3300

www.panduit.com

© 2017 Panduit Corp. ALL RIGHTS RESERVED. **NKLC18–SA-UKE** 8/2017

APPENDIX 8:

FIRE PROTECTION
CALCULATIONS AND DATA SHEETS

Hydrant Flow Test Report

Project Name:	AJR Command Center		
Project Location:	Warrenton, VA		
Test Performed by:	Jacob Watkins	Date:	May 18, 2021
Representative of:	Jacobs	Time:	10:28 AM
Purpose:	Determine available flow and pressure for fire suppression sprinkler systems		

Notes: Height from gauge hydrant to building finished floor elevation: 0 feet

	ID	Outlet Size	Outlet Coefficient
Gauge Hydrant:	#35	2.5	0.90
Flow Hydrant 1:	#34	2.5	1.40

Coefficient Note: Hydrant outlet discharge coefficients shall be determined per NFPA 291 -

Outlet with flow tube (stream straightener):	0.95
Outlet smooth and rounded:	0.90
Outlet square and sharp:	0.80
Outlet square and projecting into barrel:	0.70

Static Pressure:	(before test)	60 psig
Residual Pressure:	(one hydrant flowing)	55 psig

	Pitot Reading	Calculated Flow
Hydrant Flow Rate	28 psig	885 gpm
	Total Flow:	885 gpm
	Available Flow @ 20 psig:	2,720 gpm

Preliminary Sprinkler Calculations

Project Name: AJR Command Center
Project Location: Warrenton, VA
Calcs Performed by: Jacobs Engineering Date: January 21, 2022

Hydrant Flow Test Results				
Static Pressure	Residual Pressure	@	Hydrant Flow	Water Outlet Size
60 psig	55 psig		885 gpm	2.5 inches

Note: The sprinkler contractor will be required to perform their own hydrant flow, in order to verify the available pressure is similar to the above hydrant flow test results.

Sprinkler System Requirements			
Sprinkler Starting Pressure	Full Pressure	@	Required Flow
29.2 psi	54.4 psi		108 gpm

Summary of Design Assumptions and Sprinkler System Requirements	
Design Criteria:	NFPA 13 (2019 Edition)
System Description:	Wet Pipe
Hazard Description:	Light Hazard: ATCT CAB
Design Parameters:	Light Hazard: 0.10 gpm/sqft over 900* sqft with Spklr k= 5.6. Hose Stream Requirement & Duration: 100 gpm for 60 min *Area reduction taken for quick response sprinklers

Sprinkler System Demand Flow Estimate				
A. Overhead Requirement				Notes
Design Density (D)	=	0.10	90 gpm	
Area of Operation*	=	900 sqft		
Overflow Factor	=	20%	18 gpm	
B. Hose Stream Demand				
		Inside:	0 gpm	For Information Only -
		Outside:	100 gpm	Outside hose not included in flow estimate, but considered for available pressure
C. Total Flow Required:			108 gpm	

Preliminary Sprinkler Calculations

Sprinkler System Demand Pressure Estimate

1. Start / End Head Pressure:		16.2 psi	End pressure based on
			Area per sprinkler: 225 sqft
2. Elevation Loss:		13.0 psi	Flow per sprinkler: 22.5 gpm
Friction Loss Factor:	0.433 psi/ft		Sprinkler k-factor: 5.6
Elevation Distance:	30.0 ft		
Pressure required to start:		29.2 psi	
3. Estimated Friction Loss in Pipe			
Building		4.2 psi	
Safety Factor:	20%		
Estimate Flow:	108 gpm		
C-factor:	120		
Diameter of Pipe:	3.0 inches		
Friction Loss Factor:	0.018 psi/ft		
Pipe Distance:	200.0 ft		
		10 psi	Estimated Branchline Loss
Underground		1.0 psi	
Safety Factor:	20%		
Estimate Flow:	108 gpm		
C-factor:	140		
Diameter of Pipe:	4.0 inches		
Friction Loss Factor:	0.003 psi/ft		
Pipe Distance:	250.0 ft		
Pressure Loss in Pipe:		5.2 psi	
4. Backflow Preventer Loss:		10.0 psi	
5. Total Pressure Required:		54.4 psi	

Demand Pressure with Available Water Supply Pressure

Sprinkler Demand:	108 gpm	
Outside Hose Demand:	100 gpm	
Available Pressure at Sprinkler Demand:	59.9 psi	
Available Pressure at Sprinkler/Hose Demand:	59.7 psi	
Total Estimated Pressure Required:	54.4 psi	
Safety Factor:	5.2 psi	Water Supply Adequate
		Fire Pump Not Required

Water Supply and Sprinkler Demand Graph

Project Name: AJR Command Center
Project Location: Warrenton, VA
Calcs Performed by: Jacobs Engineering Date: January 21, 2022

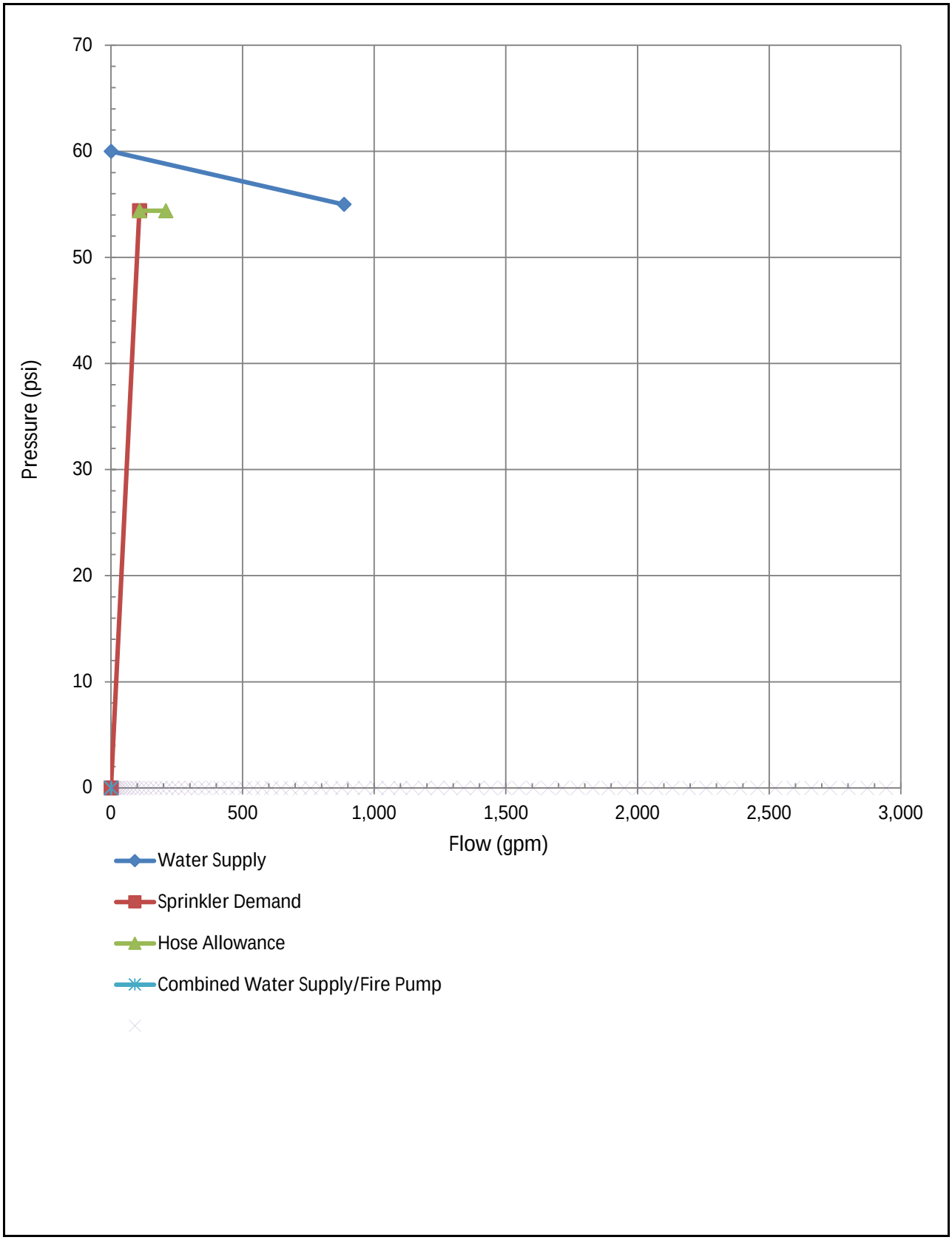

APPENDIX 9:

SUSTAINABILITY
CHECKLIST AND STRATEGIES DIAGRAMS

WARRENTON SUSTAINABILITY DIAGRAM
FIRST FLOOR

LEGEND

- OCCUPANT HEALTH & WELFARE
- *LOW-EMITTING FINISH MATERIALS AND FURNITURE
- *INDOOR AIR QUALITY AND THERMAL CONDITIONS
- CIRCADIAN RHYTHM LIGHTING
- GLARE CONTROL WITH MANUAL SHADES
- *MOISTURE CONTROL & INDOOR AIR QUALITY
- OPERATIONAL RECYCLING COLLECTION
- DIVERT WASTE FROM LANDFILL
- REDUCE CARBON FOOTPRINT
- EFFICIENT HVAC SYSTEM
- EFFICIENT SITE LIGHTING
- COMMISSIONING OF ENERGY SYSTEMS
- *EFFICIENT INTERIOR LIGHTING AND CONTROLS
- ENERGY METERING
- BENCHMARKING BUILDING PERFORMANCE DURING OPERATIONS PHASE
- PLUMBING FIXTURES SAVING 20%+
- WATER METER CONFORMANCE TO IgCC 601.3.4.1CONSUMPTION MANAGEMENT
- NO SMOKING POLICY
- ELECTRIC VEHICLE RECHARGE STATIONS
- RADON MITIGATION
- *LEAST TOXIC PEST MANAGEMENT
- ERGONOMIC FURNITURE
- *FURNITURE MANUFACTURER'S PROGRAM FOR RECYCLING OR REFURBISHING WORKSTATIONS AFTER USEFUL LIFE

*TYPICAL THROUGHOUT

WARRENTON SUSTAINABILITY DIAGRAM
SECOND FLOOR

LEGEND

- OCCUPANT HEALTH & WELFARE
- *LOW-EMITTING FINISH MATERIALS AND FURNITURE
- *INDOOR AIR QUALITY AND THERMAL CONDITIONS
- CIRCADIAN RHYTHM LIGHTING
- GLARE CONTROL WITH MANUAL SHADES
- *MOISTURE CONTROL & INDOOR AIR QUALITY
- OPERATIONAL RECYCLING COLLECTION
- DIVERT WASTE FROM LANDFILL
- REDUCE CARBON FOOTPRINT
- EFFICIENT HVAC SYSTEM
- EFFICIENT SITE LIGHTING
- COMMISSIONING OF ENERGY SYSTEMS
- *EFFICIENT INTERIOR LIGHTING AND CONTROLS
- ENERGY METERING
- BENCHMARKING BUILDING PERFORMANCE DURING OPERATIONS PHASE
- PLUMBING FIXTURES SAVING 20%+
- WATER METER CONFORMANCE TO IgCC 601.3.4.1CONSUMPTION MANAGEMENT
- NO SMOKING POLICY
- ELECTRIC VEHICLE RECHARGE STATIONS
- RADON MITIGATION
- *LEAST TOXIC PEST MANAGEMENT
- ERGONOMIC FURNITURE
- *FURNITURE MANUFACTURER'S PROGRAM FOR RECYCLING OR REFURBISHING WORKSTATIONS AFTER USEFUL LIFE

*TYPICAL THROUGHOUT

2020 Guiding Principles Checklist for Appendix B - Existing Buildings

"The Guiding Principles for Sustainable Federal Buildings and Associated Instructions (Guidance) provide agencies with a means to meet those requirements as well as Executive Order (E.O. 13834, Efficient Federal Operations (May 17, 2018) and Implementing Instructions for Executive Order 13834 (April 2019) (E.O. 13834 Implementing Instructions). The six Guiding Principles align with the definition of a high-performance green building established in the Energy Independence and Security Act (EISA) of 2007)."

S: Criteria based on statutory or regulatory requirements. NDAA aligned criteria that are applicable to the Department of Defense.
Std: Criteria that are based on green building industry standards, rather than statutory or regulatory requirements.
[C/I] Criteria where campus-wide or installation-wide protocols, policies, contracts can be used to demonstrate, upon assessment, that criteria was met at the building level.
For more information about the Guiding Principles and FEMP Support: **http://energy.gov/eere/femp/guiding-principles-sustainable-federal-buildings**

Agency: Federal Aviation Administration	**Department/Region: Department of Transportation**	**Federal Real Property ID:**
Building Name: Warrenton Command Center	**Address: Vint Hill**	**Checklist Manager: L. Davisson/JACOBS**
Federal Campus:	**City & State: Warrenton, VA**	**Date: Jan. 18, 2022**

Instructions: This Existing Buildings checklist contains 30 criteria. To qualify as a sustainable Federal building under this Guidance the building must meet all 12 of the Core criteria. For the remaining 18 "Non-Core" criteria, agencies must meet a minimum of 50 percent (9 of 18) . For building evaluation purposes, "not applicable" may be used where the building's inherent function, mission, safety, or designation prevents compliance with a specific Guiding Principle, element, or sub-element. "Not applicable" is equivalent to compliance with that Guiding Principle, element, or sub-element. Metrics marked as "N/A" should be justified and documented.

Reference Key:
(S) Criteria based on statutory or regulatory requirements.
(S*) NDAA aligned "S" criteria that are applicable to the Department of Defense (DoD).
(Std) Criteria based on green building industry standards rather than statutory or regulatory requirements.
[C/I] Criteria where campus-wide or installation-wide protocols, policies and/or contracts can be used to demonstrate, upon assessment, that the criteria was met at the building level.

Existing Building	Compliance	
	12 CORE	9 NON-CORE

Guiding Principle	Core or Non-Core	Metric	Options For Compliance (Choose one of the following in each category)	Compliance (dropdown box) Yes/No/In-Process/Not Applicable	Notes/Comments
I. Employ Integrated Assessment, Operation, and Management Principles					
EBc1.1 Integrated Design and Management	**Option 1:** Utilize any current building or portfolio risk assessment to determine and prioritize design parameters to ensure resilient building design and operations over the intended service life of the building, considering mission criticality, cost and	Ensure that sustainability goals for the operation of the building are established and incorporated into the building's Operations and Maintenance (O&M) procedures. If a renovation project is planned in the building, ensure that sustainability goals have been developed as part of the project to meet the Guiding Principles and that they are incorporated into applicable project design documents.	☐ **Option 1:** Use a collaborative, integrated process and team to operate the building project. Ensure opportunities to optimize energy, water, materials, indoor environmental quality, recycling/composting, occupant health/wellness, transportation, siting/landscape, the protection of historic propertiesand other cultural resources, community integration, and building resilience. ☑ **Option 2:** For buildings with renovation projects, use a collaborative integrated process and team tailored to the size and function of the bulding to plan, program, design, construct, commission, and transition to operation the building renovation. Identify team members and roles. Ensure all opportunities from Option 1 are considered in the project. ☐ **Option 3**: Use an integrated design process consistent with 2018 International Green Construction Code (IgCC) Appendix F Integrated Design.	**Yes**	Project uses Integrated Project team; Energy goals and environmental goals established via Guiding Principles. Sustainable design charrette was held on June 8, 2021 with the project team. A Charrette Report is available.
EBc1.2 Sustainable Siting	NON-CORE (S) [C/I]	Follow all relevant requirements of 41 CFR § 102-76.20 of the Federal Management Regulation to make a positive contribution to the surrounding landscape, and comply with the National Environmental Policy Act of 1969, as amended, 42 U.S.C. 4321 et seq., and the National Historic Preservation Act of 1966, as amended, 54 U.S.C. Subtitle III, Division A.	☐ **Option 1**: Assess all relevant opportunities for enhancements to the site sustainability. Site selection should consider the following: 1) avoid development of prime farmland; 2) preserve areas with permeable soils; 3) avoid or, if not possible, minimize potential harm to or within the floodplain; 4) protect/conserve existing landscapes, wetlands, forest, and wilderness areas; 5) minimize site disturbance; 6) preserve threatened or endangered species and their habitats, including pollinators' habitats; 7) improve linkages and connections to surrounding destinations and neighborhoods; 8) use historic properties, especially those located in central business districts; and 9) incorporate appropriate security design parameters. Agencies can reference GSA'S Sustainable Facilities Tool (SFTool) and (EPA's) Smart Growth, (USDA) pollinators resources, the Secretary of the Interior's Standards for Rehabilitation & Illustrated Guidelines on Sustainability for Rehabilitating Historic Buildings. ☐ **Option 2:** In the case of full or partial building renovation projects, use an integrated design process to apply 2018 IgCC Section 501.3.1 (5.3.1) Site Selection and 501.3.2 (5.3.2) Predesign Site Inventory and Assessment as applicable.	**No**	Although the project uses Integrated Project team and process, the Predesign Site Inventory and Assessment described in IgCC 501.3.2 was not included.
EBc1.3 Stormwater Management	NON-CORE (S) [C/I]	Choose one of the Options:	☑ **Option 1:** Employ or maintain strategies, such as low impact development (LID), that reduce stormwater runoof and discharges of polluted water offsite to protect the natrual hydrology and watershed health. ☐ **Option 2**: For buildings with renovation projects disturbing a Project a surface area of 5,000 or more sqft, use planning, design, construction, and maintenance strategies to maintain or restore the predevelopment hydrology of the property in terms of temperature, rate, volume, and duration of flow, in accordance with statutory requirements (42 U.S.C. § 17094). ☐ **Option 3**: Project with a surface area fewer than 5,000 sqft, use site planning, desgn, construction and maintenance strategies such as low impact development (LID) to manage on-site stormwater and to maintain or restore hydrologic condisions after development, to the maximum extent that is technically practicable.	**No**	

Guiding Principle	Core or Non-Core	Metric	Options For Compliance (Choose one of the following in each category)	Compliance (dropdown box) Yes/No/In-Process/Not Applicable	Notes/Comments
EBc1.4 Infrastructure Utilization and Optimization	NON-CORE (Std) [C/I]	Assess existing transit opportinities and prioritize transportation strategies that promote alternative transportation. Strategies may include walking, cycling, alternative fuel and electric vehicles, walkability factors and transit incentives applicable to the building. Include the building in any master planning related to transportations. Bulding Occupants should be able to participate in all transport. Also choose and implement one of the Options.	☐ **Option 1:** Assess and develop plans to optimize or facilitate building occupants' access (within walking distance) of existing or planned bus, streetcar, shuttle, and rapid transit stops; light or heavy rail stations; commuter rail stations or ferry terminals. Ensure a program is in place that reviews and alerts bulding occupants of new services and opportunities. ☐ **Option 2:** Consistent with 42 U.S.C. § 6364, establish an electric vehicle supply equipment (EVSE) policy and install one or more electric vehicle charging stations if parking is provided. ☐ **Option 3:** Verify that building occupants are able to access preferred parking for alternative fuel vehicles (may include parking for agency fleet alternative fuel vehicles). ☐ **Option 4:** Provide an alternative transportation program to support walkability and connection to transportation networks, including pedestrian access to sidewalks, pathways, and bicycle trails to reduce transportation congestion and parking. The program may include alternative transit education; preferred parking for rideshare vehicles; transit discounts; telecommuting and bicycle racks. ☐ **Option 5:** Conform to 2018 IGCC Section 1001.3.2.4 (10.3.2.4) Transportation Management Plan and Section 501.3.7.3 (5.3.7.3) Site Vehicle Provisions.	**No**	
EBc1.5 Commissioning	CORE (S)	Employ commissioning based on the designation of the building per Section 432 of the Energy Independence and Security Act of 2007 ((42 U.S.C. 8253(f)(2)(B)) and tailored to the size and complexity of the building AND ONE OF THE FOLLOWING OPTIONS:	☑ **Option 1: For a building identified as a "covered facility" (42 U.S.C. § 8253 (f)(2)(B)):** Ensure compliance with 42 U.S.C. § 8253 (f)(3)(B) to identify and assess (re/retro-) commissioning measures for the facility in accordance with DOE Federal Energy Management Program's (FEMP) Facility Energy Management Guidlines and Criteria for Energy and Water Evaluations in Covered Facilities and Commissioning for Federal Facilities guidance. ☐ **Option 2**: **For a building not identified as a "covered facility" (42 U.S.C. § 8253 (f)(2)(B))**: Ensure the building has previosly been commissioned, recommissioned, or retro-commissioned and has not had a major change in mission or function, occupancy, energy consumption, water consumtion or major facility upgrades, or renovations since previous commissioning. If the building has not previously been commissioned or major changes have occurred, identify and assess (re/retro-) commissioning measures for the facility, in accordancee with FEMP's Commissioning for Federal Facilities guidance. ☐ **Option 3: For either a "covered" or "non-covered" facility (42 U.S.C. § 8253 (f)(2)(B)):** Implement ongoing commissioning in accordance with FEMP's Commissioning for Federal Facilities_guidance, which identifies on-going commissioning as an appropriate pathway for large and complex facilities with high energy use and/or frequent tenant comlaints. For covered facilities, ensure compliance wth all statutory reporting requiremenets, per 42 U.S.C. § 8253 (f)(3)(B), when using on-going commissioning.	**Yes**	Commissioning tailored to the complexity of the project will be employed. Option 1 will be met under the exception for buildings that undergo recommissioning.
II. Optimize Energy Performance					
EBc2.1 Energy Efficiency	CORE (S)	Employ strategies to improve energy performance and reduce energy usage and, for all procurements involving energy-consuming products and services, incorporate energy-efficiency criteria consistent with ENERGY STAR and FEMP-designated energy-efficient products in accordance with 42 U.S.C § 8259b (10 CFR § 436.40–436.43).	☐ **Option 1:** Ensure building energy use is 20% below a FY 2015 energy use baseline. ☐ **Option 2:** Ensure building energy use is 30% below a FY 2003 energy use baseline. ☐ **Option 3:** Ensure the building has an ENERGY STAR score of 75 or higher. ☐ **Option 4:** For building types not eligible to receive an ENERGY STAR, demonstrate that the building is in the top quartile of energy performance for its building type. ☑ **Option 5:** For buildings with renovation projects, comply to Federal design energy performance specifications established under with 10 CFR Parts 433 subpart A, and 10 CFR parts 435 subpart A by designing to exceed ANSI/ASHRAE/IES Standard 90.1 by at least 30%, where life cycle cost-effective.	**Yes**	30% savings is demonstrated.
EBc2.2 Energy Metering	CORE (S)	Verify the use of existing meters or, if no meter exists, install building-level meters for electricity or advanced meters to the maximum extent practicable for electricity, and standard metering devices for natural gas and stem in accordance with , as required by DOE's Federal Building Metering Guidance, per 42 U.S.C. § 8253(e)(1).	☑ **Compliance**	**Yes**	There is an existing natatural gas and water meter. Power metering in accordance with the electric utility's (NOVEC) requirements is included. The exiting commercial electric utility A new DDC system with BACnet controls system is included.
EBc2.3 Renewable Energy	NON-CORE (S) [C/I]	Evaluate applicable renewable electric energy strategies related to the project or building that could support, as needed, agency progress toward renewable energy goals where cost-effective, per 42 U.S.C. § 15852(a). *[Campus/Installation-wide approach can be utilized if the agency has assessed and can verify that the building will directly benefit from the renewable energy system. An internal energy accounting or tracking system to apportion renewable energy or attributes to the building to avoid any double counting]*	☐ **Option 1:** Implement, as appropriate, life cycle cost-effective on-site renewable electric or thermal energy projects or utilize alternative energy systems such as waste heat, combined heat/power (CHP), or fuel cell energy systems If that is not feasible the agency should establish an internal energy accounting or tracking system to apportion power purchases from off-site renewable sources or renewable energy certificates (RECs) to the building. ☐ **Option 2:**. Comply with 42 U.S.C § 6834(a)(3)(A)(iii) where 30% of the hot water demand is to be met through the installation and use of solar hot water heaters. ☐ **Option 3:** Comply with 2018 IgCC Section 701.4.1.1 (7.4.1.1) On-Site Renewable Energy Systems with the exception that there is no minimum energy production (kBtu/ft2) requirement.	**No**	

Guiding Principle	Core or Non-Core	Metric	Options For Compliance (Choose one of the following in each category)	Compliance (dropdown box) Yes/No/In-Process/Not Applicable	Notes/Comments
EBc2.4 Benchmarking	NON-CORE (S) [C/I]	Benchmark building performance at least annually and regularly monitor building energy performance against historical performance data and peer buildings where feasible. Choose one of the Options:	☑ **Option 1: For a building identified as a "covered facility" (42 U.S.C. § 8253 (f)(2)(B)):** Benchmark building performance at least annually, preferably using ENERGY STAR Portfolio Manager, and regularly monitor building energy performance in accordance with criteria established by DOE's Federal Building Energy Use Benchmarking Guidance_ per 42 U.S.C. § 8253(f)(8). ☐ **Option 2: For a building not identified as a "covered facility" (42 U.S.C. § 8253 (f)(2)(B)):** Benchmark using a system consistent with agency policy, including alternative benchmarking systems and/or strategies not subject to public disclosure, if applicable. Agencies can refer to DOE's Federal Building Energy Use Benchmarking Guidance for additional resources. ☐ **Option 3:** For buildings with renovation projects, conform to 2018 IgCC Section 1001.3.2.1.3.2 (10.3.2.1.3.2) Track and Assess Energy Consumption.	**Yes**	The Owner will collect building project energy data in a report format during the Operations phase of the project.
III. Protect and Conserve Water					
EBc3.1 Indoor Water Use	CORE (S)	Employ strategies that minimize water use and verify purchasing policies or procedures are in place that reuire water efficient fixtures. Agencies should refer to EPA's WaterSense, GSA's SFTool: Water, and DOE-FEMP's Water Efficiency in Federal Buildings and Campuses resources for additioal details on available water conservation technologies and best management practices.	☐ **Option 1:** Ensure that water use is 20 percent below a FY 2007 water use baseline (from meter readings or engineering estimates) If baseline year data is not available or reliable, data from the earliest post-baseline year that is available and reliable can be used. ☑ **Option 2:** Conduct analysis showing at least a 20 percent reduction when comparing installed fixture performance to a base case that represents the code-minimum, using the FEMP Water Evaluation Data Tool or water fixture performance calculator. Conform to 2018 IgCC Section 601.3.2.1 (6.3.2.1) Plumbing Fixtures and Fittings or 601.3.2.6 (6.3.2.6) Medical and Laboratory Facilities (if applicable). ☐ **Option 3:** To maximize water savings in HVAC systems, single-pass (also called "once-through") cooling equipment using potable water should be eliminated or retrofitted to recirculate or recapture discharge water in other applications (such as irrigation). Cooling towers should maximize cycles of concentration in accordance with 2018 IgCC Section 601.3.2.3 (6.3.2.3) HVAC Systems and Equipment. ☐ **Option 4:** Develop and implement a strategic water management plan in accordance with the applicable F EMP Best Management Practices (BMPs) for Water Efficiency.	**Yes**	Specified plumbing fixture rates demonstrate at least a 20% reduction as compared to a baseline.
EBc3.2 Water Metering	NON-CORE (Std)	Choose one of the Options:	☐ **Option 1:** Install building level water meters (standard or advanced) and monitor to ensure optimized management of water use during occupancy, including detection of leaks in accordance with DOE's Federal Building Metering Guidance. ☑ **Option 2:** For buildings with renovation projects, conform to 2018 IgCC Section 601.3.4.1 (6.3.4.1) Consumption Management.	**Yes**	Measurement devices with remote communication capability shall be provided to collect water consumption data for domestic water suppy.
EBc3.3 Outdoor Water Use	NON-CORE (Std) [C/I]	Evaluate and implement, water efficient landscaping best practices that incorporate native, non-invasive, drought tolerant, and low maintenance plant species. Utilize landscaping best practices resources provided by GSA's SFTool - Water, DOE-FEMP's Water Efficiency in Federal Buildings and Campuses, EPA's WaterSense - Outdoors.	☐ **Option 1:** Employ water efficient irrigation strategies to reduce outdoor potable water consumption and demonstrate that the permanent irrigation system uses 50% or less of the amount of potable water assuming typical annual baseline water use. Refer to DOE-FEMP's Water Efficiency in Federal Buildings and Campuses resource on establishing a baseline. Install water meters for irrigation systems serving more than 25,000 square feet of landscaping. ☐ **Option 2:** If installing or using landscaping, utilize xeriscaping techniques or do not irrigate beyond the establishment of plantings when landscaping. ☐ **Option 3:** Conform to 2018 IgCC Section 601.3.1.1 (6.3.1.1) Landscape Design. For irrigation areas larger than 25,000 sqft : conform to Section 601.3.1.2 (6.3.1.2) Irrigation and Section 601.3.4.1 (6.3.4.1) Consumption Management	**Not Applicable**	No irrigation is proposed.
EBc3.4 Alternative Water	NON-CORE (Std) [C/I]	Choose one of the Options:	☐ **Option 1 :** Implement, where technically feasible and permitted by local laws and regulations, methods to utilize alternative sources of water for indoor/outdoor use, such as harvested rainwater, treated wastewater, air handler condensate capture, grey water, and reclaimed water. ☐ **Option 2:** Implement methods to utilize alternative sources of water that conform to 2018 IgCC Definition of Water, Alternative on-site sources.	**Not Applicable**	
IV. Enhance the Indoor Environment					
EBc4.1 Ventilation and Thermal Comfort	CORE (S)	Choose one of the Options:	☐ **Option 1:** In accordance with 41 CFR §§ 102-74.195 and 102-74.185 of the Federal Management Regulation (which references ASHRAE "Ventilation for Acceptable Indoor Air Quality" Standard 62 where physically practical); comply with all ventilation and thermal comfort requiements. Refer to the GSA's SFTool Enhancing Health with Indoor Air resources on enhancing indoor air quality. ☑ **Option 2:** Conform to 2018 IgCC Sections 801.3.1 (8.3.1) Indoor Air Quality and 801.3.2 (8.3.2) Thermal Environmental Conditions for Human Occupancy.	**Yes**	IgCC requirements to meet ASHRAE 62.1 Sections 4 - 6 as well as ASHRAE 55 Sections 6.1 and 6.2 will be met.

Guiding Principle	Core or Non-Core	Metric	Options For Compliance (Choose one of the following in each category)		Compliance (dropdown box) Yes/No/In-Process/Not Applicable	Notes/Comments
EBc4.2 Daylighting and Lighting Controls	NON-CORE (S)	Verify the building maintains all required illumination levels in accordance with 41 CFR § 102-74.180 of the Federal Management Regulation, and maximize the use of automatic dimming controls or accessible manual controls in regularly occupied spaces.	☐ ☑ ☐	**Option 1:** Ensuring regularly occupied spaces along the exterior wall have fenestration, and control solar gain, daylight transmittance, and glare. Evaluate and assess occupant workplaces to allow more open space around windows with appropriate glare controls, except where not appropriate because of building function, mission or structural constraints. **Option 2**: If nregularly occupied spaces do not have adequate daylighting, utilize circadian-effective lighting based on computer analysis or simulation tools to design optimal lighting conditions for the regularly occupied spaces. **Option 3:** Conform to 2018 IgCC Sections 801.3.7 (8.3.7) Glare Control, 801.4.1.1.1 (8.4.1.1.1) Minimum Daylight Area, and 801.4.1.2 (8.4.1.2) Minimum Sidelighting Effective Aperture for Office Spaces and Classrooms, and 801.4.1.3 (8.4.1.3) Shading for Offices; or 801.5.1 (8.5.1) Daylight Simulation.	**Yes**	Regularly occupied spaces along the exterior wall have fenestration and control of solar gain, daylight transmittance, and glare. Regularly occupied spaces that do not have access to daylight will incorporate circadian-effective lighting based to design optimal lighting conditions for those spaces has been incorporated. In addition to the minimum requirement, the design includes scheduling to incorporate circadian-effective lighting at all regularly occupied spaces, even those with fenestration.
EBc4.3 Low-Emitting Materials and Products	NON-CORE (Std) [C/I]	Choose one of the Options:	☐ ☑	**Option 1:** Verify policy or purchasing procedures are in place to utilize low-emitting material. Applicable materials and products may include common supplies and replacements for composite wood products, flooring and carpet systems, wall panels, insulation, adhesives, sealants, interior paints and finishes, solvents, janitorial supplies, and furnishings. Refer to EPA's Volatile Organic Compounds' Impact on Indoor Air Quality resources for information on low-emitting products. **Option 2:** Conform to 2018 IgCC Section 801.4.2 (8.4.2) Materials or Section 801.5.2 (8.5.2) Materials.	**Yes**	Specifications include the requirements for low-emitting materials.
EBc4.4 Radon Mitigation	CORE (S) [C/I]	Choose one of the Options:	☑ ☐	**Option 1:** Conform to 41 CFR § 102-80.20 of the Federal Management Regulation, test for radon and mitigate high levels to maintain a level at or below 4 pCi/L (picocuries/liter). **Option 2:** Conform to 2018 IgCC Section 1001.3.1.9 (10.3.1.9) Soil-Gas Control.	**Yes**	A radon venting system exists within the building; portions below slab will be retained and new venting components will be added above the slab. Compliance with the GP Option 1 criterion, which requires testing for radon as well as mitigation of high radon levels, is specified.
EBc4.5 Moisture and Mold Control	NON-CORE (Std)	Choose one of the Options:	☐ ☑	**Option 1:Verify a** moisture control strategy is in place (may be part of the operations and maintenance protocols) for controlling moisture flows and condensation to prevent building damage, minimize mold contamination, and reduce health risks related to moisture. **Option 2:** For buildings with renovation projects, conform to 2018 IgCC Section 801.3.6 (8.3.6) Moisture Control.	**Yes**	To comply, a dynamic heat and moisture analysis would be specified to be performed on above-grade portions of the building envelope
EBc4.6 Indoor Air Quality during Construction	NON-CORE (Std)	Choose one of the Options:	☐ ☑	**Option 1:** Implement or verify a policy is in place to protect indoor air quality during operations as well as during any applicable renovations in the existing building. This may include strategies for having permanent entryway systems in place to capture dirt and particulates entering the building and specific procedures to protect occupants during renovations. **Option 2:** For buildings with renovation projects, conform to 2018 IgCC Sections 1001.3.1.5 (10.3.1.5) IAQ Construction Management, and 1001.3.1.8 (10.3.1.8) Construction Activity Pollution Prevention: Protection of Occupied Areas.	**Yes**	Specifications include requirements for an IAQ Plan during construction.

Guiding Principle	Core or Non-Core	Metric	Options For Compliance (Choose one of the following in each category)	Compliance (dropdown box) Yes/No/In-Process/Not Applicable	Notes/Comments
EBc4.7 Environmental Smoking Control	CORE (S) [C/I]	Choose one of the Options:	☑ **Option 1:** Comply with 41 CFR § 102-74.315 and 102-74.330 of the Federal Management Regulation, prohibit smoking in any form inside and within 25 feet of all building entrances, operable windows, and building ventilation intakes. Ensure signage is installed as appropriate. ☐ **Option 2:** Conform to 2018 IgCC Section 801.3.1.7 (8.3.1.7) Environmental Tobacco Smoke.	**Yes**	Smoking will be prohibited. Signage will be provided as appropriate.
EBc4.8 Integrated Pest Management	NON-CORE (S) [C/I]	Conform to 41 CFR § 102-74.35 of the Federal Management Regulation, ensure effective and environmentally sensitive integrated pest management (IPM) services including the planning, development, operations, and maintenance for pest control, removal, and prevention in both indoor and outdoor spaces. Ensure that pest management contracts coordinate with service programs that have a bearing on pest activity, such as food service, landscaping, child care, waste management, and repairs and operations. Refer to GSA's IPM definition, EPA's IPM resources, and GSA's SFTool Pest Management	☑ **Compliance**	**Yes**	It is recommended that the FAA develop a policy for Integrated Management for implementation.
EBc4.9 Occupant Health and Wellness	NON-CORE (S) [C/I]	Choose one of the Options:	☐ **Option 1:** Evaluate the feasibility of implementing occupant health and wellness efforts and promote two or more strategies that are cost-effective and applicable to the building mission. Agencies are encouraged to assess and promote occupant health and wellness strategies. Refer to GSA's SFTool for additional strategies and guidance on health and wellness in Federal facilities. Examples: 1) Implementing biophilic design strategies that connect a majority of interior spaces with nature, using views, finishes, plants, daylighting, outdoor access, or other strategies; 2) Providing healthy dining following the U.S Department of Health and Human Services (HHS) / GSA Health and Sustainability Guidelines for Federal Concessions and Vending Operations where appropriate; 3) Designing stairwells as a desirable option for circulation to support active occupants; 4) Implementing a fitness program, constructing or providing access to a fitness center or multi-use space; 5) Installing bicycle parking with safe, secure storage; 6) Providing adjustable-height desks or computer risers for 25% of the regular occupied spaces; and 7) Providing water bottle-refilling stations, establish a process to test water quality annually, and ensure proper maintenance of the stations. Refer to EPA's Drinking Water ☐ **Option 2:** Achieve certification utilizing any Health & Wellness Standards and Rating System identified by GSA, under its authorities per 42 U.S.C. § 17092.	**No**	The program does not include sufficient elements to meet all facets of the requirements.
V. Reduce the Environmental Impact of Materials					
EBc5.1 Materials - Recycled Content	CORE (S) [C/I]	Verify that a policy or procedures are in place to procure and use Resource Conservation and Recovery Act (RCRA) section 6002 compliant products that meet or exceed EPA's Comprehensive Procurement Guideline Program in accordance with 42 U.S.C. § 6962 et seq.	☑ **Compliance**	**Yes**	Specifications address the requirements for recycled content.
EBc5.2 Materials - Biobased Content	CORE (S) [C/I]	Verify that a policy or procedures are in place to procure and use U.S. Department of Agriculture (USDA) BioPreferred products, in accordance with 7 U.S.C. § 8102.	☑ **Compliance**	**Yes**	Specifications address the requirements for biobased content.
EBc5.3 Products	NON-CORE (Std) [C/I]	Choose one of the Options:	☐ **Option 1:** Verify that a policy or procedures are in place to procure and use products recommended under EPA's Recommendations of Specifications, Standards, and Ecolabels for Federal Purchasing as appropriate and applicable. ☑ **Option 2:** For buildings with renovation projects, conform to 2018 IgCC Section 901.4.1.4 (9.4.1.4) Multiple-Attribute Product Declaration or Certification.	**Yes**	At least 10 products and/or materials will be specified to have environmental product declarations that meet IgCC 901.4.1.4 criteria.
EBc5.4 Ozone Depleting Substances	CORE (S) [C/I]	Choose one of the Options:	☑ **Option 1:** Verify that a policy or procedures are in place to procure and use safe alternatives for ozone depleting substances in accordance with 42 U.S.C. § 7671k and 42 U.S.C. § 7671l. Maximize the use of safe alternatives, identified by EPA's Significant New Alternative Policy (SNAP) Program. Refer to EPA's SNAP regulations, 40 CFR part 82 which list substitues that have been determined unaccptabl, acceptable use conditions and acceptable subject to narrowed use limits. ☐ **Option 2:** For buildings with renovation projects, conform to 2018 IgCC Section 901.3.3 (9.3.3) Refrigerants.	**Yes**	Compliant refrigerant is specified.
EBc5.5 Hazardous Waste	CORE (S)	Verify that a program or procedures are in place to ensure compliance with all relevant hazardous waste construction or operational acivities that are covered by RCRA subtitle C and subtitle I and the Comprehensive Environmental Response, Compensation, and Liability Act (CERCLA), per 42 U.S.C. § 9601 et seq. and regulations at 40 CFR Parts 239-282. Have a program and procedure to manage hazardous waste, or the building does not generate, store, treat, or dispose of hazardous waste. (40 CFR §§ 260.10 and 261.3)	☑ **Compliance**	**Not Applicable**	Based upon information provided by the FAA, the facility has no known hazardous materials. It is not anticipated that any hazmat abatement will be required for any project work.

Guiding Principle	Core or Non-Core	Metric	Options For Compliance (Choose one of the following in each category)	Compliance (dropdown box) Yes/No/In-Process/Not Applicable	Notes/Comments
EBc5.5 Solid Waste Management	NON-CORE (Std) [C/I]	Verify waste management and recycling policy, program or procedures are in place.	☐ **Option 1:** Conduct an analysis or verify one has been done of non-hazardous, non-construction waste and develop a waste management plan or industry equivalent to increase waste diversion rate. Include in or ensure that the plan estimates waste types and amounts as well as goals for waste diversion to minimize waste sent to landfill. ☑ **Option 2:** Where markets exist, ensure diversion of at least 50 percent of non-hazardous and non-construction related materials from landfill and non-energy generating incineration, in alignment with EPA's Waste Management Hierarchy. ☐ **Option 3:** Conform to 2018 IgCC Section 901.3.4 Areas for Storage and Collection of Recyclables and Discarded Goods. ☑ **Option 4:** For buldings with renovation projects, develop and implement a construction and demolition waste management plan for construction projects. Where markets exist, ensure diversion of at least 50 percent of non-hazardous and non-construction related materials from landfill and non-energy generating incineration, in alignment with EPA's Waste Management Hierarchy.	**Yes**	Requirements for development and implementation of a construction and demolition waste plan are specified. A minimum of 50% diversion away from landfills is required.
VI. Assess and Consider Building Resilience					
EBc6.1 Risk Assessment	NON-CORE (S*) [C/I]	Choose one of the Options:	☐ **Option 1:** Ensure the folloing are or have been incorporated into a site and facility risk assessment where appropriate: 1. Assess long-term mission critical functions such as mission needs, building functions, occupants, and operations. Consider impacts to the surrounding community/building operational needs. 2. Assess the localized risks; identify hazards, threats, vulnerabilities, and consequences. Identify and review any known observed and expected long-term weather-related and geographical hazards to inform and enhance the resilience of the building design/operations. 3. Assess relevant stressors that could exacerbate hazards and risks and check if the frequency is increasing/staying the same/decreasing. 4. As part of any future portfolio planning, consider the potential for any adaptive capacity of the building and operatons to cope with to shocks, stressors, or ability to adjust to new situations. 5. Evaluate and incorporate, as applicable, a comprehensive energy and water infrastructure assessment, investigate alternative energy sources to serve as back-up power. ☐ **Option 2:** Evaluate and integrate the mission critical activities that are apart of a recent agency, facility, installation, or campus resilience or adaptation assessment. This can include Installation Master Plans, climate adaptation plans, or equivalent agency, installation, or campus resilience or adaptation plans. ☐ **Option 3:** Utilize available Federal climate resilience planning tools like the U.S. Climate Resilience Toolkit, the Naval Facilities Engineering Command's Climate Change Installation Adaptation and Resilience Planning Handbook, the NIST Community Resilience Planning Guide for Buildings and Infrastructure Systems, the NIST EDGe$ (Economic Decision Guide Software) Online Tool, the U.S. Army Corps of Engineers climate preparedness and resilience planning tools, the U.S. Department of the Army's Climate Assessment Tool and Climate Resilience Handbook, FEMP's Technical Resilience Navigator	**No**	Although Jacobs performs some analysis of Climate Resilience Risk, the scope of work does not include the level(s) of assessment needed to meet the criteria. The FAA may wish to evaluate the site and facility in a separate scope of work.
EBc6.2 Building Resilience and Adaptations	NON-CORE (S*) [C/I]	Choose one of the Options:	☐ **Option 1:** Utilize any current building or portfolio risk assessment to determine and prioritize design parameters to ensure resilient building design and operations over the intended service life of the building, considering mission criticality, cost, and security. Consider, in the operation plans of the building, campus or instalation, the resilience and adaptive capacity of the building to cope with stressors and mitigat based on mission criticality and cost. Implement or verify no cost and cost-effective climate resilience measures where feasible. Consider the level of passive survivability and functionality during emergencies and integrate any applicable strategies into plans. ☐ **Option 2:** Implement or verify past implementation of applicable cost-effective strategies identified through an agency developed resilience or adaptation plans or any other Federal agency developed climate resilience or risk assessment planning tools. (For examples go to 6.1.)	**No**	