CONSTRUCTION DOCUMENTS
UTAH AIR NATIONAL GUARD
ELECTRONIC SECURITY SQUADRON FACILITY
AND ADDITION TO
ELECTRONIC SECURITY COMMAND COMPLEX
PROJECT NO. USEB939661

PREPARED FOR:
DEPARTMENTS OF THE ARMY AND THE AIR NATIONAL GUARD BUREAU

FFKR *Architecture/Planning/Interior Design* 132 Pierpont Avenue, Suite 200 Salt Lake City, Utah 84101 (801) 521-6186 Fax (801) 539-1916

CONSULTANTS

STRUCTURAL
CALDER-KANKAINEN ENGINEERS
307 WEST 200 SOUTH, SUITE 400
SALT LAKE CITY, UTAH 84101
(801) 328-2726 FAX (801) 328-2737

MECHANICAL
OLSEN & PETERSON ENGINEERS, INC.
14 EAST 2700 SOUTH
SALT LAKE CITY, UTAH 84115
(801) 486-4646 FAX (801) 467-2531

ELECTRICAL
BECHERER NIELSON ASSOCIATES
145 PIERPONT AVENUE
SALT LAKE CITY, UTAH 84101
(801) 532-2196 FAX (801) 532-2305

LANDSCAPE
BRENT MORRIS ASSOCIATES
1074 E. RAYMOND ST.
FRUIT HEIGHTS, UTAH 84037
(801) 544-0064 FAX (801) 546-6669

CIVIL
PRICE ASSOCIATES, ENGINEERS
2050 NORTH REDWOOD ROAD #40
SALT LAKE CITY, UTAH 84116
(801) 355-1000 FAX (801) 355-1096

SYMBOLS LEGEND

- WINDOW DESIGNATION (A)
- DOOR DESIGNATION (13B)
- WALL SECTION (03 / A5.1 — SECTION NUMBER, SHEET NUMBER)
- BUILDING SECTION (03 / A5.1 — SECTION NUMBER, SHEET NUMBER)
- DETAIL REFERENCE (03 / A5.1 — DETAIL NUMBER, SHEET NUMBER)
- NORTH ARROW
- TITLE (SECTION OR DETAIL NUMBER; SCALE; SHEET NUMBER)
- INTERIOR ELEVATION (WALL IDENTIFICATION N/E/S/W; ELEVATION NUMBER 03 / A5.1; SHEET NUMBER)
- PARTITION TYPES (F) — REFER TO SHEET A5.5
- CEILING TYPES (SHOWN ON REFLECTED CEILING PLAN) — ROOM NAME/NUMBER; HEIGHT ABOVE FINISHED FLR.; CIEL'G TYPE
- INTERIOR FINISHES — ROOM NAME; ROOM NUMBER; BASE FINISH; FLOOR FINISH; NORTH WALL; SOUTH WALL; EAST WALL; WEST WALL; DN. / UP

APPROVALS

BASE COMMANDER	3 Apr 96 DATE
BASE CIVIL ENGINEER	3 Apr 96 DATE
SAFETY	3 Apr 96 DATE
USING AGENCY	4 Apr 96 DATE
COMMUNICATIONS	4 Apr 96 DATE
FIRE CHIEF	Assist Chief 3 April 96 DATE
BIOENVIRONMENTAL	3 Apr 96 DATE

MATERIALS LEGEND

- CONCRETE MASONRY
- EARTH
- GRAVEL
- ASPHALT
- CONCRETE
- RIGID INSULATION
- BATT INSULATION
- PLYWOOD
- ACOUSTIC CEILING PANEL
- STEEL/METAL
- CERAMIC TILE
- GYPSUM BOARD
- GROUT
- MARBLE

VICINITY MAP

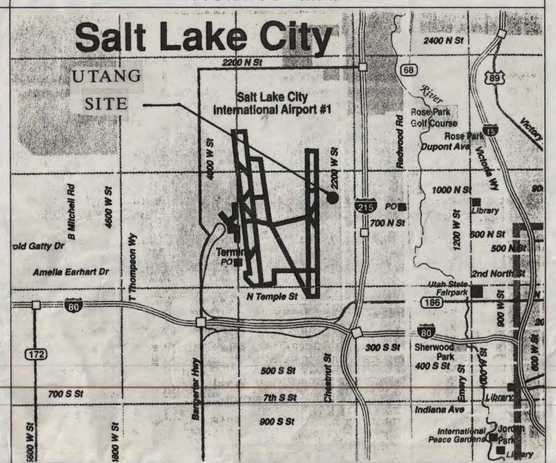

INDEX OF DRAWINGS

NEW SQUADRON FACILITY

	COVER SHEET
C1.1	DEMOLITION PLAN
C2.1	GENERAL PROJECT PLAN
C2.2	GRADING/DRAINAGE PLAN
C2.3	UTILITY SITE PLAN
C3.1	SECTIONS THRU SITE
C4.1	DETAILS
C4.2	DETAILS
C4.3	DETAILS
C5.1	UTILITY PROFILES
L-1	LANDSCAPE/IRRIGATION PLAN
A2.1	FLOOR PLAN
A2.2	ENLARGED FLOOR PLAN, DETAILS
A3.1	ROOF PLAN, DETAILS
A4.1	BUILDING ELEVATIONS
A5.1	BUILDING SECTIONS
A5.2	WALL SECTIONS
A5.3	WALL SECTIONS
A5.4	WALL SECTIONS
A5.5	WALL SECTIONS/PARTITION TYPES
A5.6	MISCELLANEOUS DETAILS
A6.1	INTERIOR ELEVATIONS
A6.2	INTERIOR ELEVATIONS
A6.3	INTERIOR ELEVATIONS
A7.1	REFLECTED CEILING PLANS
A8.1	DOOR SCHEDULE, DETAILS
A8.2	DOOR/WINDOW DETAILS
A8.3	WINDOW SCHEDULE, DETAILS
A9.1	CASEWORK, DETAILS
A10.1	SYSTEMS FURNITURE PLAN, (N.I.C.)
S1.1	STRUCTURAL NOTES, DETAILS
S2.1	FOOTING & FOUNDATION PLAN
S3.1	ROOF FRAMING PLAN
S4.1	STRUCTURAL DETAILS
M1.1	MECHANICAL SCHEDULES
M2.1	MECHANICAL FLOOR PLAN
M3.1	MECHANICAL ROOF PLAN
M4.1	ENLARGED MECHANICAL ROOM
M4.2	MECHANICAL SECTIONS
M5.1	MECHANICAL DETAILS
M5.2	MECHANICAL DETAILS
M5.3	MECHANICAL DETAILS
M5.4	SEISMIC DETAILS
M5.5	SEISMIC DETAILS
P1.1	PLUMBING SCHEDULES & DETAILS
P2.1	PLUMBING FLOOR PLAN
P4.1	ENLARGED PLUMBING PLANS
P5.1	PLUMBING DETAILS
P5.2	PLUMBING DETAILS
FP2.1	FIRE PROTECTION PLAN
E0.1	SCHEDULES & NOTES
E1.1	SITE PLAN
E2.1	LIGHTING PLAN
E3.1	POWER PLAN
E4.1	SCHEMATICS
E5.1	ONE LINE DIAGRAMS
E6.1	ELECTRICAL DETAILS
E7.1	PANEL BOARD SCHEDULES

COMMAND COMPLEX ADDITION

CA1.1	DRIVEWAY SITE PLAN
LA-1	LANDSCAPE/IRRIGATION PLAN
AA2.1	FLOOR PLAN, SECTIONS, DETAILS
AA3.1	ROOF PLAN, REFLECTED CEILING PLAN, DETAILS
AA4.1	BUILDING ELEVATIONS, SECTIONS, DETAILS
AA6.1	INTERIOR ELEVATIONS, DETAILS
SA1.1	STRUCTURAL PLANS & DETAILS
MA2.1	MECHANICAL PLAN
PA1.1	PLUMBING SITE PLAN
PA2.1	PLUMBING PLAN
EA-2.1	ELECTRICAL PLAN, DETAILS

ABI INDEX

#1 ESCC REMODEL
#2 LANDSCAPING
#3 POLE MOUNTED LIGHT FIXTURES
#4 FULL LENGTH GLASS BLOCK AT ADMINISTRATION
#5 OIL/WATER SEPARATORS AND SAMPLING MANHOLE

CODE ANALYSIS

MODEL CODE: UNIFORM BUILDING CODE 1994

ADA CODE: CHAPTER 11, UBC VOL.1

OCCUPANCY: F-1

CONST. TYPE: TYPE V, NON-RATED FULLY SPRINKLERED

BASIC ALLOWABLE AREAS:

8,000 SF

x3 FOR FULLY SPRINKERED BLDG.

24,000 SF TOTAL ALLOWABLE

GROSS BUILIDNG AREA: 13,089 SF

GENERAL NOTES

1. Submit, for User's approval, at set time, dates and procedures for cutting and patching of existing utilities and/or construction. Do not proceed without approval.
2. Utilities: List existing utilities that cutting and patching procedures will disturb or affect. List utilities that will be relocated and those that will be temporarily out-of-service. Indicate how long service will be disrupted.
3. Do not cut and patch new structural elements in a manner that would change their load-carrying capacity or load-deflection ratio. Obtain approval of the cutting and patching of the following structural elements:
   a. Foundation construction.
   b. Bearing and retaining walls.
   c. Structural concrete.
   d. Structural steel.
   e. Lintels.
   f. Stair systems.
   g. Miscellaneous structural metals.
   h. Exterior curtain-wall construction.
   i. Equipment supports.
   j. Piping, ductwork, vessels and equipment.

   Obtain approval of the cutting and patching proposal before cutting and patching the following new or existing operating elements or safety related systems:
   a. Primary operational system and equipment.
   b. Air or smoke barriers.
   c. Water, moisture or vapor barriers.
   d. Membranes and flashings.
   e. Fire protection systems.
   f. Noise and vibration control elements and systems.
   g. Control systems.
   h. Communication systems.
   i. Electrical wiring systems.
4. In general, where cutting, use hand or small power tools designed for sawing or grinding, not hammering and chopping. Cut holes and slots as small as possible, neatly to size required, and with minimum disturbance of adjacent surfaces. Temporarily cover openings when not in use.
5. Visual Requirements: Do not cut and patch new construction exposed on the exterior or in occupied spaces in a manner that would, in the Architect's opinion, reduce the building's aesthetic qualities. Do not cut and patch construction in a manner that would result in visual evidence of cutting and patching. Replace construction cuts and patches in a visually satisfactory manner.
6. Protection: Protect construction that is in place during cutting and patching to prevent damage. Provide protection to construction that is in place from adverse weather conditions.
7. A digging permit from the base will be required before any excavating or trenching will be allowed
8. Any item indicated to be painted; is to have it's color coordinated with the Architect
9. All penetrations through fire-rated assemblies are to be properly firestopped.

DATE PRINTED

APRIL 1, 1996

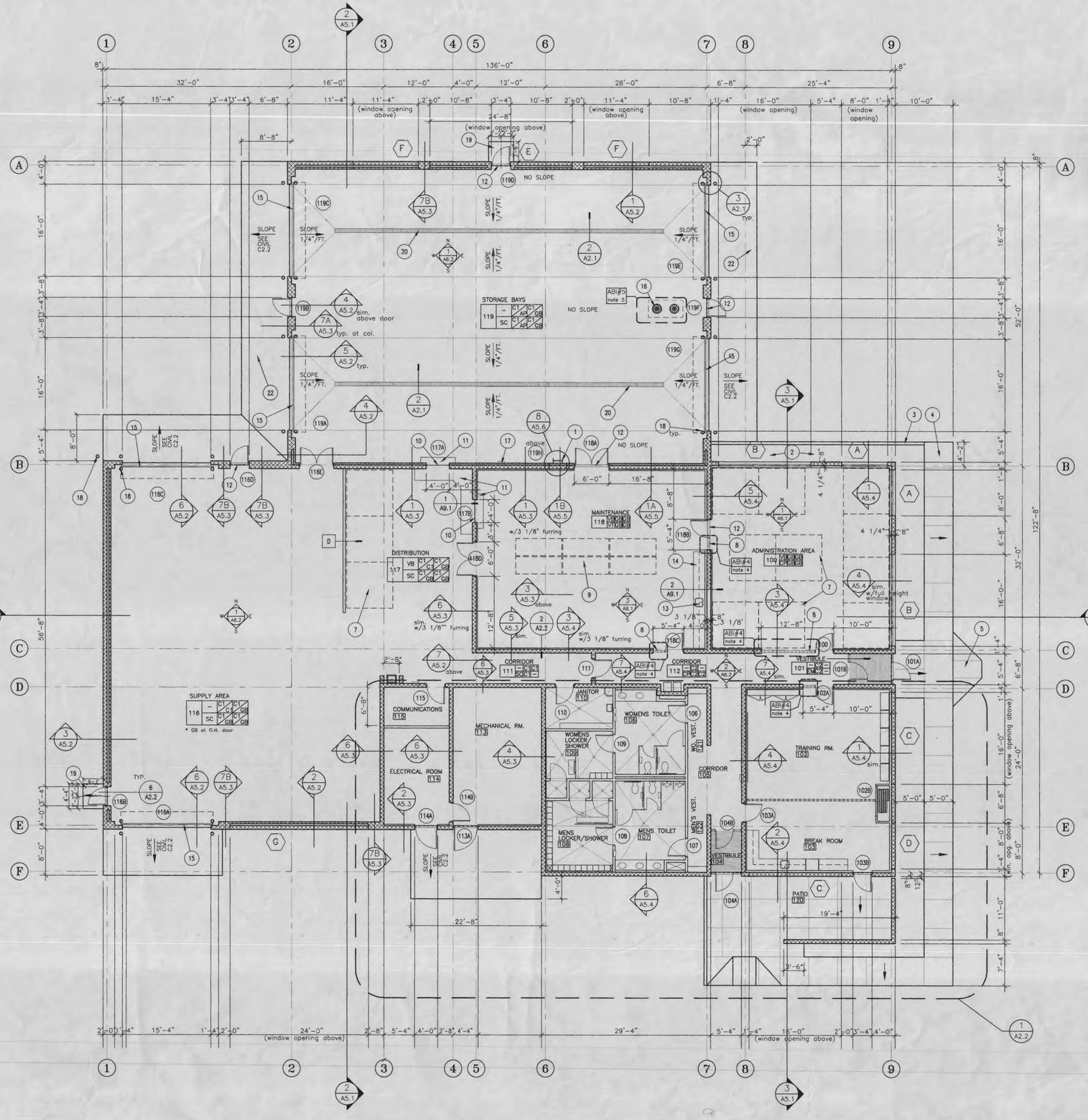

1 A2.1 FLOOR PLAN

SCALE: 1/8" = 1'-0"

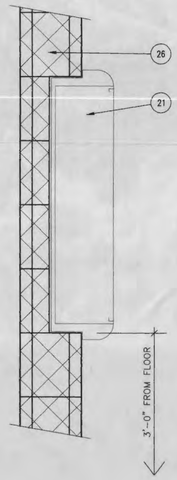

FIRE EXSTINGUISHER CABINET | SCALE: 1-1/2"=1'-0" | 4 A2.1

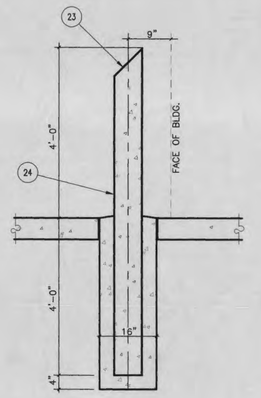

STEEL BOLLARD DETAIL | SCALE: 6"=1'-0" | 3 A2.1

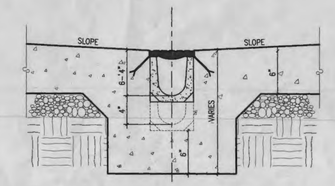

TRENCH DRAIN DETAIL | SCALE: NTS | 2 A2.1

REFERENCE NOTES

1. LADDER TO LOW ROOF
2. LANDSCAPING ABI#2 SEE SPEC. SEE NOTE #3
3. CONCRETE CURB (SEE CIVIL)
4. CONC. SIDEWALK (SEE CIVIL)
5. DISABLED ACCESS RAMP (SEE CIVIL)
6. MECHANICAL EQUIP. (SEE MECH.)
7. SYSTEMS FURNITURE, SEE SHT.A0.1 (NIC)
8. GLASS BLK. MASONRY (SEE NOTE 4)
9. WORK BENCHES (NIC)
10. COILING COUNTER DOORS (PAINTED)
11. PLASTIC LAMINATE COUNTER TOP
12. SCHEDULED THRESHOLD
13. SINK (SEE PLUMB.)
14. BASE AND OVERHEAD CABINETS
15. INSULATED OVERHEAD COILING DOOR
16. OIL AND WATER SEPARATOR SEE PLUMBING ABI #5 SEE NOTE #5
17. FIRE EXTINGUISHER & CABINET
18. STEEL BOLLARD
19. CONCRETE PAD (SEE CIVIL)
20. TRENCH DRAIN, SEE SPEC.
21. NOT USED
22. CONCRETE APRON (SEE CIVIL)
23. 1/4" PL. CAP, WELDED & GROUND
24. 6" D. GROUTED STL. PIPE (PAINTED)
25. CONCRETE SLAB (SEE STRUCT.)
26. CONCRETE MASONRY

GENERAL NOTES

1. ALL WALL FINISHES SHALL BE PAINTED UNLESS OTHERWISE NOTED.
2. FOR ALL EXTERIOR ELEVATIONS, REFER TO CIVIL DRAWING C2.2
3. LANDSCAPING TO BE ELIMINATED UNLESS ABI #2 IS SELECTED.
4. GLASS BLOCK MASONRY TO BE ELIMINATED UNLESS ABI #4 IS SELECTED. IF ABI #4 IS NOT SELECTED AS PART OF THIS WORK, WHERE GLASS BLOCK IS SHOWN ON THE DRAWING, THE BASE BID IS TO INCLUDE 8" CONCRETE MASONRY UNITS WITH HORIZONTAL BOND BEAMS @32" o.c.; TO CREATE A COMPLETE WALL SEPARATION AS DEPICTED ON THE DRAWINGS, INCLUDING APPROPRIATE DOOR JAMB DETAILING.
5. OIL AND WATER SEPARATOR AND MANHOLE SAMPLERS TO BE ELIMINATED UNLESS ABI#5 IS SELECTED

D — PARTITION TYPES SEE SHEET A5.5

FINISH SCHEDULE

ROOM NAME / ROOM NUMBER	BASE FINISH	NORTH WALL	EAST WALL
	FLOOR FINISH	SOUTH WALL	WEST WALL

ROOM NAME / ROOM NUMBER	BASE FINISH	NORTH WALL DN. / UP	EAST WALL DN. / UP
	FLOOR FINISH	SOUTH WALL DN. / UP	WEST WALL DN. / UP

FLOOR FINISH
CP – CARPET TILE
VT – VINYL COMPOSITION TILE
SC – SEALED CONCRETE
CT – CERAMIC TILE FLOOR

BASE FINISH
VB – VINYL BASE AT GYP. BD. WALL
N – NO BASE
CT – CERAMIC TILE BASE

WALL FINISH
C1 – CONCRETE MASONRY, PLAIN FINISH SCORED (PAINTED)
C2 – CONCRETE MASONRY, HONED FINISH SCORED, SEALED
C3 – CONCRETE MASONRY, PLAIN FINISH (PAINTED)
GB – GYPSUM BOARD (PAINTED)
CT – CERAMIC TILE WALL
AP – ACOUSTIC PANEL (PAINTED)

AIR NATIONAL GUARD CIVIL ENGINEERING

UTAH AIR NATIONAL GUARD BASE

785 NORTH 2200 WEST
SALT LAKE CITY, UTAH
84116-2999

FLOOR PLAN

ELECTRONIC SECURITY SQUADRON FACILITY – UTAH AIR NATIONAL GUARD
PROJ. NO. USEB 939661

FFKR Architects Planners II
132 Pierpont Ave. Suite 200
Salt Lake City, Utah 84101
Telephone 801 521-6186

DATE: APRIL 1, 1996
REVISED:
DRAWN BY:
DRAWING NO: A2.1

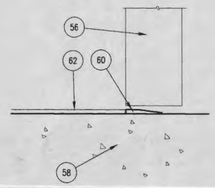

NOT USED | SCALE: NTS | 12 A2.2

TRANSITION DETAIL. VCT TO CONCRETE | SCALE: 6"=1'-0" | 10 A2.2

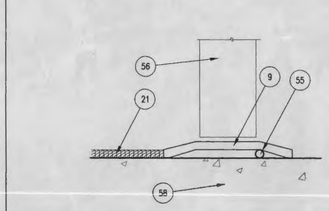

TRANSITION DETAIL. CARPET TO CONCRETE | SCALE: 6"=1'-0" | 8 A2.2

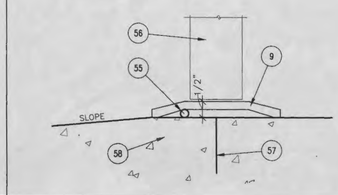

TRANSITION DETAIL. CONCRETE TO CONCRETE | SCALE: 6"=1'-0" | 6 A2.2

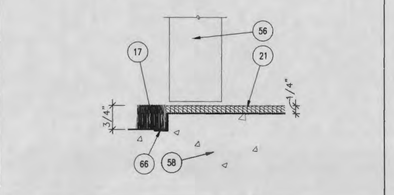

TRANSITION DETAIL. ENTRY MAT TO CARPET | SCALE: 6'=1'-0" | 4 A2.2

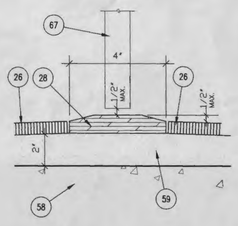

TRANSITION DETAIL. CERAMIC TILE TO CERAMIC TILE | SCALE: 6"=1'-0" | 11 A2.2

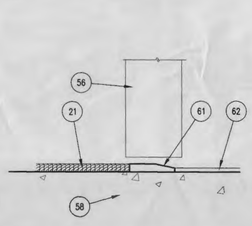

TRANSITION DETAIL. CARPET TO VCT | SCALE: 6"=1'-0" | 9 A2.2

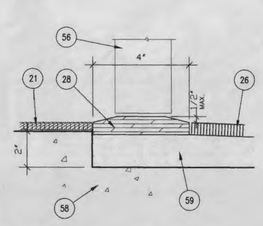

TRANSITION DETAIL. CARPET TO CERAMIC TILE | SCALE: 6"=1'-0" | 7 A2.2

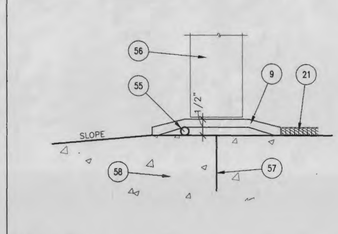

TRANSITION DETAIL. CONCRETE TO CARPET | SCALE: 6'=1'-0" | 5 A2.2

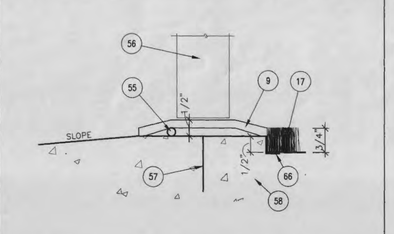

TRANSITION DETAIL. CONCRETE TO ENTRY MAT | SCALE: 6"=1'-0" | 3 A2.2

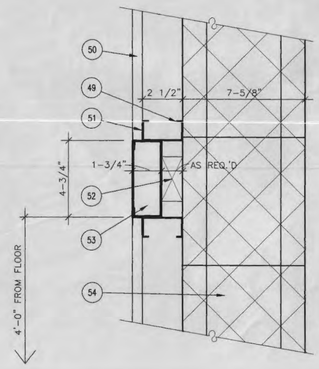

RACEWAY DETAIL | SCALE: 3"=1'-0" | 2 A2.2

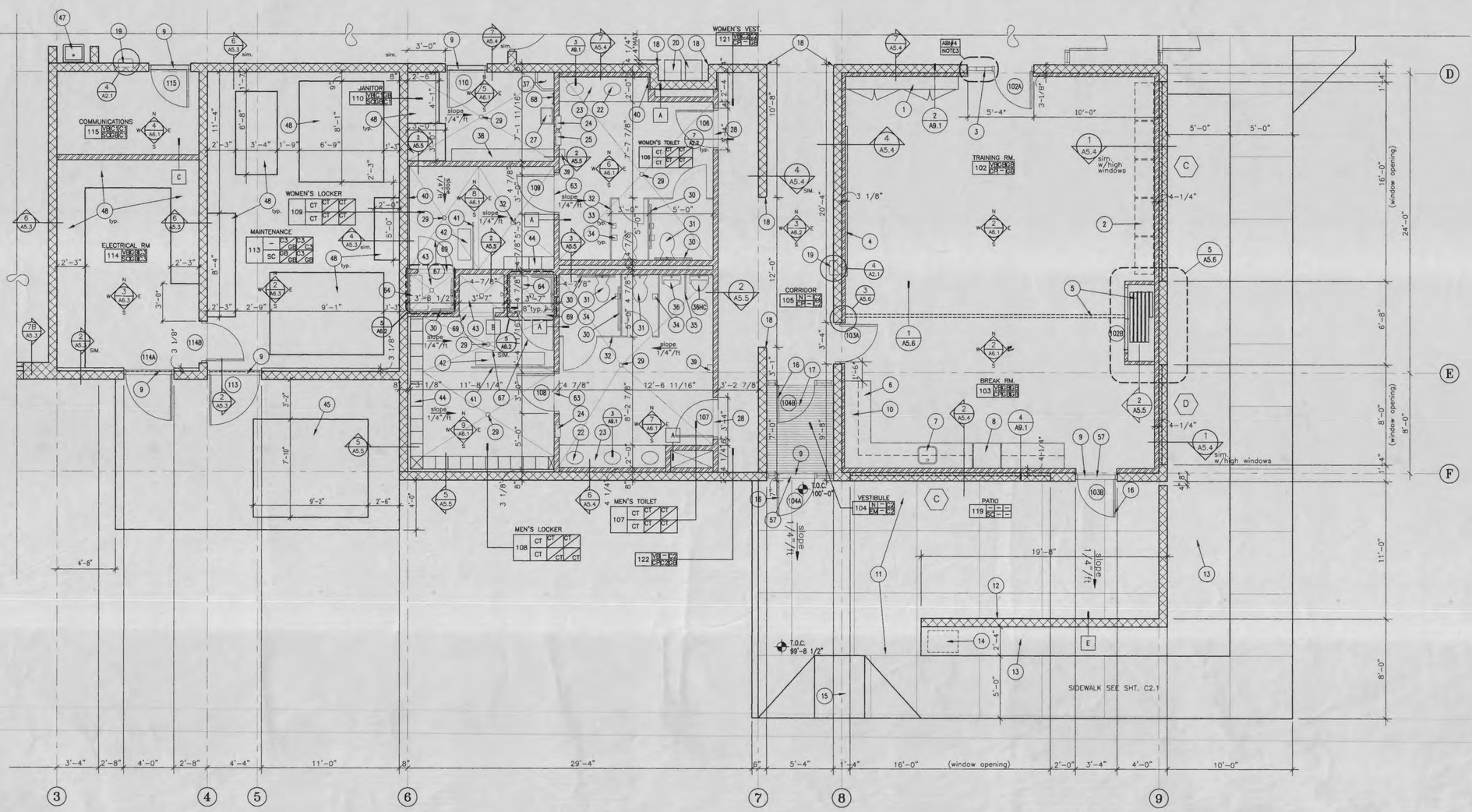

1 A2.2 ENLARGED FLOOR PLAN
SCALE: 1/4" = 1'-0"

GENERAL NOTES

1. ALL FINISHES SHALL BE PAINTED UNLESS OTHERWISE NOTED. COLOR TO BE COORDINATED WITH ARCHITECT.
2. LANDSCAPING TO BE ELIMINATED UNLESS ABI #2 IS SELECTED.
3. GLASS BLOCK MASONRY TO BE ELIMINATED UNLESS ABI #4 IS SELECTED. IF ABI #4 IS NOT SELECTED AS PART OF THIS WORK, WHERE GLASS BLOCK IS SHOWN ON THE DRAWING, THE BASE BID IS TO INCLUDE 8" CONCRETE MASONRY UNITS WITH HORIZONTAL BOND BEAMS @32" o.c.; TO CREATE A COMPLETE WALL SEPARATION AS DEPICTED ON THE DRAWINGS, INCLUDING APPROPRIATE DOOR JAMB DETAILING.

FINISH SCHEDULE

ROOM NAME

ROOM NUMBER	BASE FINISH	NORTH WALL	EAST WALL
	FLOOR FINISH	SOUTH WALL	WEST WALL

ROOM NAME

ROOM NUMBER	BASE FINISH	DN. / UP	DN. / UP
	FLOOR FINISH	DN. / UP	DN. / UP

NORTH WALL | EAST WALL | SOUTH WALL | WEST WALL

FLOOR FINISH

- CP – CARPET TILE
- VT – VINYL COMPOSITION TILE
- SC – SEALED CONCRETE
- CT – CERAMIC TILE FLOOR (RECESS CONCRETE SLAB AS REQUIRED FOR SLOPE)
- EM – ENTRY MAT (RECESS CONC. SLAB 1/2')

BASE FINISH

- VB – VINYL BASE AT GYP. BD. WALL
- N – NO BASE
- CT – CERAMIC TILE BASE WITH CEMENTIOUS WALL BOARD BACK-UP

WALL FINISH

- C1 – CONCRETE MASONRY, PLAIN FINISH SCORED (PAINTED)
- C2 – CONCRETE MASONRY, HONED FINISH SCORED, SEALED
- C3 – CONCRETE MASONRY, PLAIN FINISH
- GB – GYPSUM BOARD (PAINTED)
- CT – CERAMIC TILE WALL WITH CEMENTIOUS WALL BOARD BACK-UP
- AP – ACOUSTIC PANEL (PAINTED)

REFERENCE NOTES

1. 7'-0" HIGH STORAGE CABINETS W/ ADJUSTABLE SHELVING
2. SYSTEMS FURNITURE, CARREL WORKSTATIONS, SEE SHT. A10.1(NIC)
3. GLASS BLOCK MASONRY SEE NOTE #3
4. 4' X 12' MARKER BOARD
5. FOLDING PARTITION
6. BASE CABINETS
7. SINK (SEE PLUMBING)
8. REFRIGERATOR (NIC)
9. SCHEDULED THRESHOLD
10. OVERHEAD CABINETS
11. CONCRETE SLAB ON GRADE PATIO (SEE CIVIL)
12. CONCRETE MASONRY WALL, SEE SPEC.
13. LANDSCAPING, ABI#2, SEE SPEC. SEE NOTE 2
14. GAS METER LOCATION (SEE MECH.)
15. DISABLED ACCESS RAMP (SEE CIVIL)
16. PREFINISHED STEEL ENTRY DOORS
17. RECESS CONCRETE SLAB 1/2' TO RECEIVE ENTRY MAT
18. BULLNOSE CMU CORNER
19. FIRE EXSTINGUISHER & CABINET
20. ELECTRIC WATER COOLER
21. CARPET TILE
22. LAVATORY
23. PLASTIC LAMINATE COUNTER TOP
24. PAPER TOWEL DISPENSER AND WASTE RECEPTICAL
25. FEM. NAPKIN DISPENSER
26. CERAMIC TILE
27. WALL MOUNTED UTILITY SINK (SEE PLUMB.)
28. MARBLE THRESHOLD
29. FLOOR DRAIN (SEE PLUMB.)
30. GRAB BARS
31. WATER CLOSET
32. TOILET PARTITION
33. FEM. NAPKIN DISPOSAL
34. TOILET TISSUE DISPENSER
35. URINAL SCREEN
36. URINAL
37. MOP SINK (SEE PLUMB.)
38. ADJUSTABLE HEAVY DUTY SHELVING
39. HAND DRYER
40. 7/8" CHANNEL FURRING W/ CEMENTITIOUS BACKER BOARD
41. SHOWER ROOM PARTITION
42. SHOWER ROOM BENCH
43. SHOWER, SLOPE 1/4" PER FT. TO DRAIN
44. METAL LOCKERS
45. 10" CONCRETE HOUSEKEEPING PAD WITH #4 BARS EACH WAY TOP AND BOTTOM AT 12" o.c.
46. MECHANICAL EQUIP. (SEE MECH.)
47. WALL MOUNTED SINK (SEE PLUMB.)
48. 4" CONC. HOUSEKEEPING PAD REFER TO MECHANICAL FOR EXACT SIZE AND LOCATION. COORDINATE WITH EQUIP. SUPPLIER
49. 2 1/2" FURRING CHANNEL
50. 5/8" GYP.BD.
51. 'J' SHAPED TRIM
52. CONT. WOOD BLOCKING, FASTEN W/ MASONRY ANCHORS 24" O.C.
53. PREFINISHED ELEC. RACEWAY
54. CONCRETE MASONRY
55. SEALANT
56. SCHEDULED DOOR
57. CONCRETE JOINT
58. CONCRETE SLAB
59. LEVELING GROUNT FOR CERAMIC TILE
60. TILE REDUCER STRIP
61. CARPET EDGE STRIP
62. VINYL COMPOSITION TILE
63. CONTROL JOINT
64. FOLD-UP SHOWER SEAT
65. H.C. SHOWER GRAB BARS
66. ALUMINUM FRAME FOR RECESSED ENTRY MAT
67. METAL FRAMED, TEMPERED GLASS SHOWER DOOR
68. MOP RECEPTOR THRESHOLD SEE 11/A2.2

AIR NATIONAL GUARD CIVIL ENGINEERING

UTAH AIR NATIONAL GUARD BASE

705 NORTH 2200 WEST
SALT LAKE CITY, UTAH
84116-2999

ENLARGED FLOOR PLAN DETAILS

DATE: APRIL 1, 1996
REVISED:
DRAWN BY:
DRAWING NO: A2.2

ELECTRONIC SECURITY SQUADRON FACILITY – UTAH AIR NATIONAL GUARD
PROJ. NO. USEB 939661

FFKR Architects Planners II
132 Pierpont Ave. Suite 200
Salt Lake City, Utah 84101
Telephone 801 521-6186

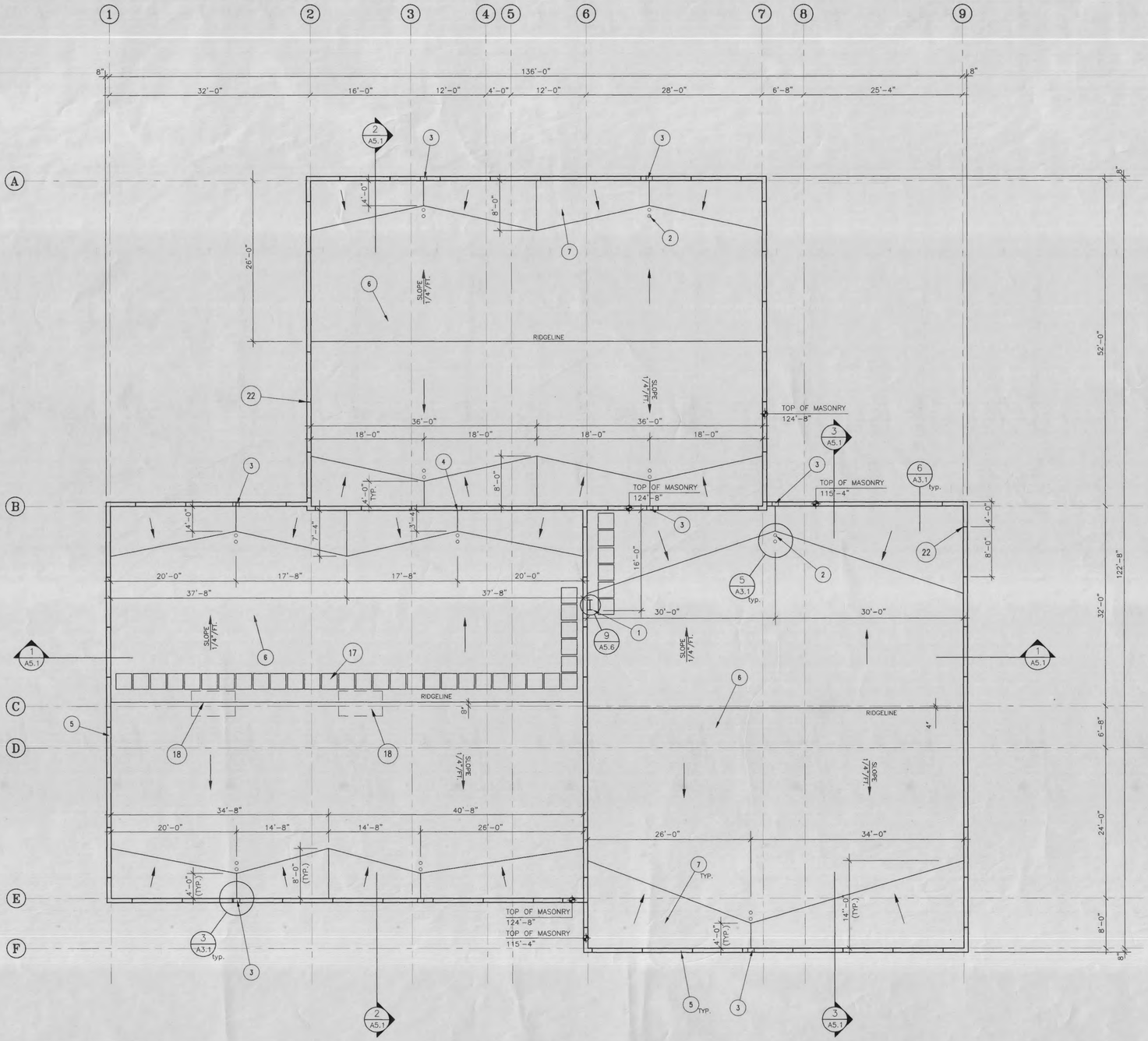

1 A3.1 ROOF PLAN
SCALE: 1/8" = 1'-0"

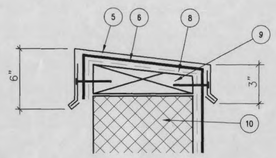

PARAPET COPING DETAIL | SCALE: NTS | 6 A3.1

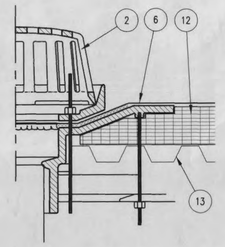

ROOF DRAIN DETAIL | SCALE: NTS | 5 A3.1

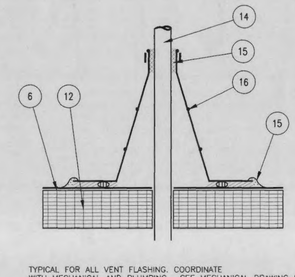

TYPICAL FOR ALL VENT FLASHING. COORDINATE WITH MECHANICAL AND PLUMBING. SEE MECHANICAL DRAWING M3.1

VENT FLASHING DETAIL | SCALE: NTS | 4 A3.1

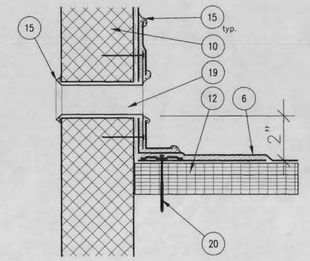

OVERFLOW SCUPPER DET. | SCALE: NTS | 3 A3.1

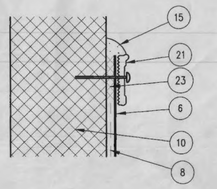

TERMINATION DETAIL | SCALE: NTS | 2 A3.1

REFERENCE NOTES

1. EXTERIOR ROOF LADDER (PAINTED)
2. MAIN (& SECONDARY) ROOF DRAINS
3. OVERFLOW SCUPPER THRU WALL
4. NO SCUPPER
5. METAL COPING (PAINTED)
6. SINGLE-PLY MEMBRANE
7. ROOF CRICKET, 1/4" PER FT. SLOPE
8. ROOFING ADHESIVE
9. WOOD BLOCKING
10. MASONRY PARAPET WALL
11. not used
12. ROOF INSULATION
13. METAL ROOF DECK (SEE STRUCT.)
14. ROOF VENT
15. SEALANT
16. PRE-FORMED VENT PIPE FLASHING
17. WALKWAY PADS
18. MECHANICAL EQUIP. (SEE MECH.)
19. GALVANIZED METAL SCUPPER SLEEVE (WELD WATERTIGHT)
20. FASTENER AND PLATE
21. TERMINATION BAR
22. COPING JOINTS
23. WATER BLOCKING

GENERAL NOTES

1. SEE MECHANICAL SHEET M3.1 FOR ROOF PENETRATIONS
2.

AIR NATIONAL GUARD CIVIL ENGINEERING

UTAH AIR NATIONAL GUARD BASE

785 NORTH 2200 WEST
SALT LAKE CITY, UTAH
84116-2999

ROOF PLAN/DETAILS

ELECTRONIC SECURITY SQUADRON FACILITY – UTAH AIR NATIONAL GUARD
PROJ. NO. USEB 939661

FFKR Architects Planners II
132 Pierpont Ave. Suite 200
Salt Lake City, Utah 84101
Telephone 801 521-6186

DATE: APRIL 1, 1996
REVISED:
DRAWN BY: E. LOFGRAN

DRAWING NO: A3.1

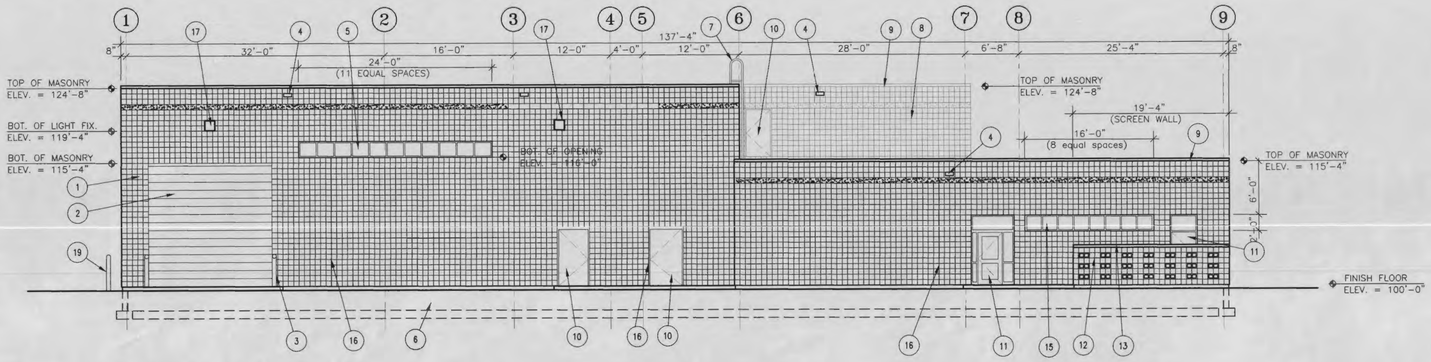

4 A4.1 SOUTH ELEVATION

SCALE: 1/8" = 1'-0"

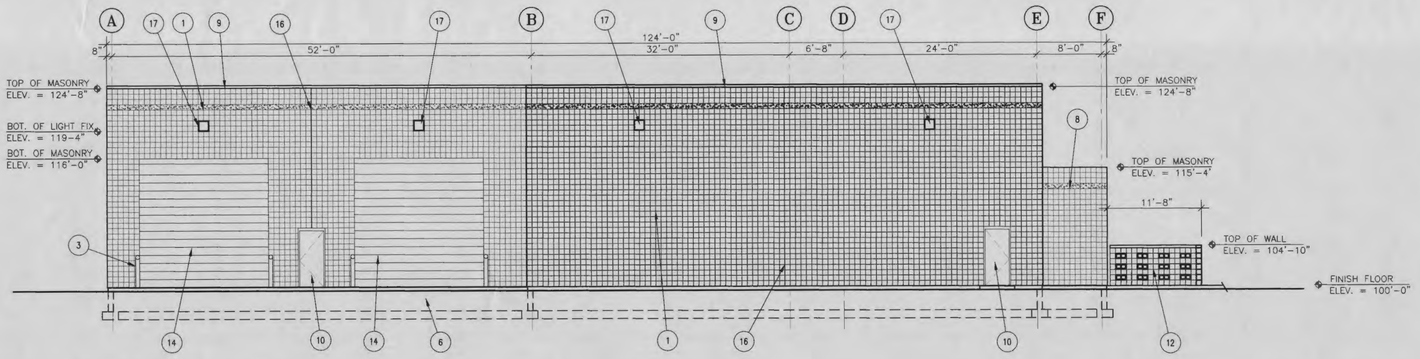

3 A4.1 WEST ELEVATION

SCALE: 1/8" = 1'-0"

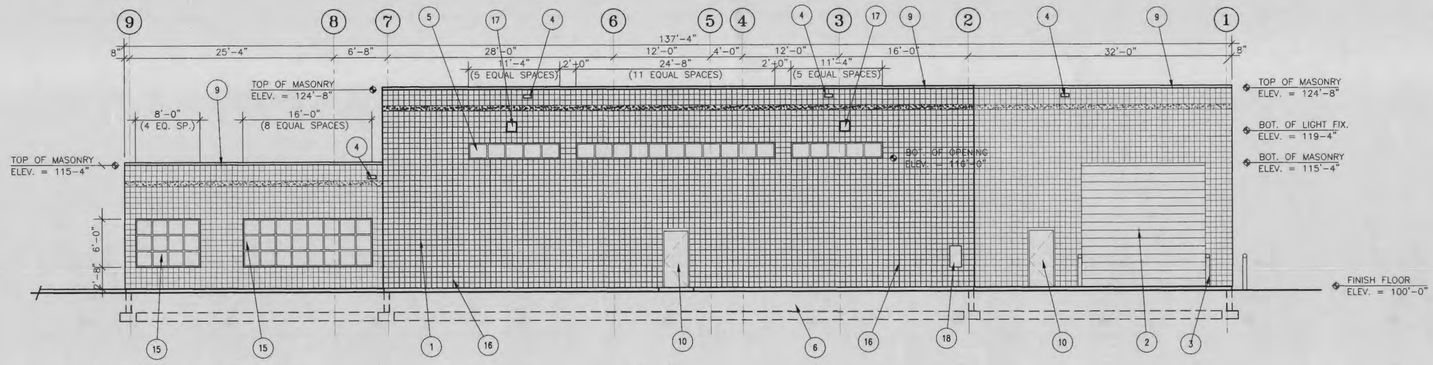

2 A4.1 NORTH ELEVATION

SCALE: 1/8" = 1'-0"

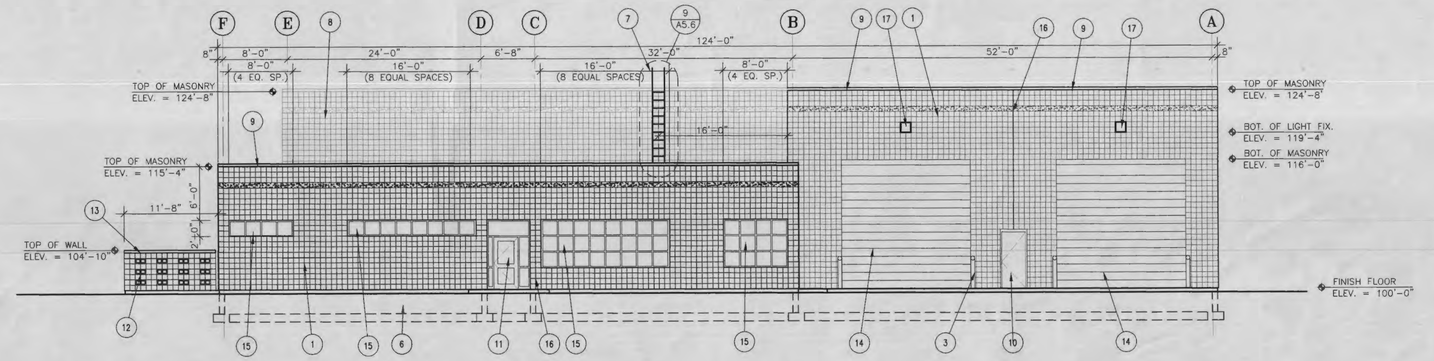

1 A4.1 EAST ELEVATION

SCALE: 1/8" = 1'-0"

REFERENCE NOTES

1. CONCRETE MASONRY
2. 15'X15' INSULATED OVERHEAD COILING DOOR
3. 6"D. PIPE BOLLARD
4. OVERFLOW SCUPPER
5. HOLLOW METAL WINDOWS (PAINTED)
6. CONC. FTG. & FOUND.
7. ROOF LADDER (PAINTED)
8. WALL BEYOND
9. METAL CAP FLASHING (PAINTED)
10. INSULATED H.M. ENTRY DOOR & FRAME
11. PREFINISHED ENTRY DOOR & FRAME
12. 4'-10" CONC. MASONRY SCREEN WALL
13. CONCRETE WALL CAP
14. 16'X16' INSULATED OVERHEAD COILING DOOR
15. PREFINISHED STEEL WINDOWS
16. MASONRY CONSTRUCTION JOINT
17. LIGHTING FIXTURE (SEE ELEC.)
18. IRRIGATION CONTROLLER (SEE LANSCAPING) ABI #2-SEE NOTE 2
19. BOLLARD BEYOND

GENERAL NOTES

1. ALL FINISHES SHALL BE PAINTED UNLESS OTHERWISE NOTED.
2. LANDSCAPING TO BE ELIMINATED UNLESS ABI #2 IS SELECTED

AIR NATIONAL GUARD CIVIL ENGINEERING

UTAH AIR NATIONAL GUARD BASE

785 NORTH 2200 WEST
SALT LAKE CITY, UTAH
84116-2999

BUILDING ELEVATIONS

ELECTRONIC SECURITY SQUADRON FACILITY – UTAH AIR NATIONAL GUARD
PROJ. NO. USEB 939661

FFKR Architects Planners II
132 Pierpont Ave. Suite 200
Salt Lake City, Utah 84101
Telephone 801 521-6186

DATE: APRIL 1, 1996
REVISED:
DRAWN BY: E. LOFGRAN

DRAWING NO: A4.1

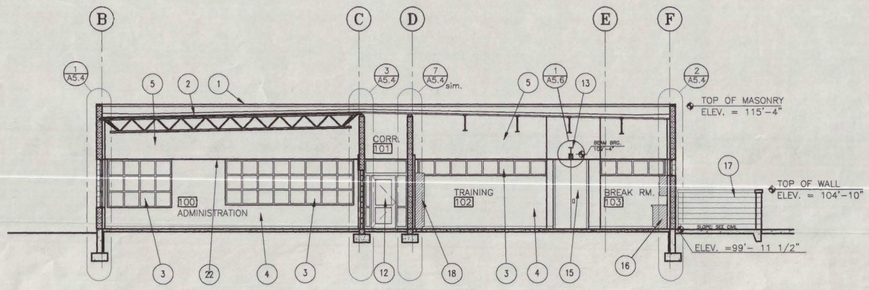

3 / A5.1 BUILDING SECTION LOOKING EAST

SCALE: 1/8" = 1'-0"

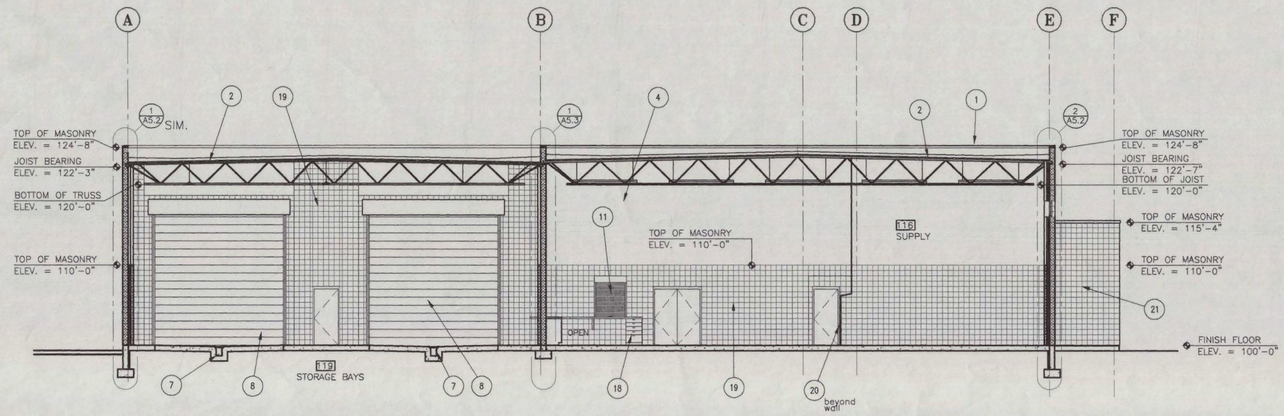

2 / A5.1 BUILDING SECTION LOOKING EAST

SCALE: 1/8" = 1'-0"

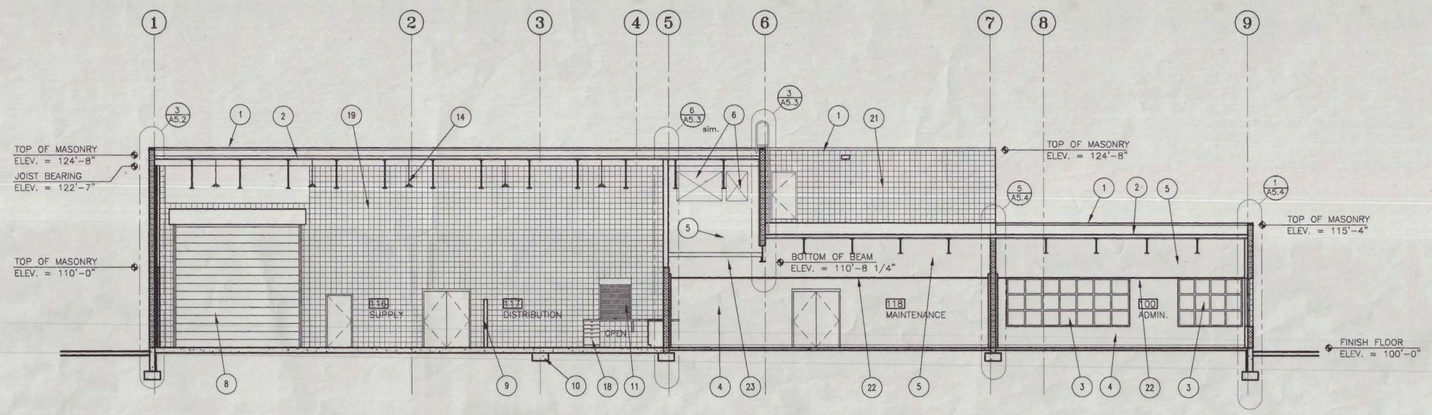

1 / A5.1 BUILDING SECTION LOOKING NORTH

SCALE: 1/8" = 1'-0"

REFERENCE NOTES

1. METAL CAP FLASHING (PAINTED)
2. SINGLE-PLY MEMBRANE ROOF ASSEMBY
3. PREFINISHED STEEL WINDOWS
4. GYP.BD. WALL (PAINTED)
5. CONC. MASONRY ABOVE CEILING, (NOT SHOWN)
6. DUCTWORK OPENINGS IN MASONRY (VERIFY LOCATION W/ MECH.)
7. TRENCH DRAIN
8. INSULATED OVERHEAD COILING DOOR
9. 6'-0" HIGH PARTITION
10. FOOTING FOR FUTURE MEZZANINE
11. COILING COUNTER DOOR
12. PREFINISHED STEEL ENTRY DOOR AND FRAME
13. STEEL BEAM FOR FOLDING PARTITION, SEE S3.1
14. LIGHT FIXTURE (SEE ELEC.)
15. FOLDING PARTITION STORAGE POCKET
16. KITCHEN CASEWORK
17. PATIO SCREEN WALL
18. CASEWORK
19. CONC. MASONRY (PAINTED)
20. UTILITY SINK (SEE PLUMB.)
21. WALL BEYOND
22. SUSPENDED CEILING
23. CEILING SUPPORT FRAMING

GENERAL NOTES

1. SEE SHEETS A6.1 THRU A6.3 FOR INTERIOR ELEVATIONS.

AIR NATIONAL GUARD CIVIL ENGINEERING

UTAH AIR NATIONAL GUARD BASE

785 NORTH 2200 WEST
SALT LAKE CITY, UTAH
84116-2966

BUILDING SECTIONS

ELECTRONIC SECURITY SQUADRON FACILITY – UTAH AIR NATIONAL GUARD
PROJ. NO. USEB 939661

FFKR Architects Planners II
132 Pierpont Ave. Suite 200
Salt Lake City, Utah 84101
Telephone 801 521-6186

DATE: APRIL 1, 1996
REVISED:
DRAWN BY: E. LOCKRAM

DRAWING NO: A5.1

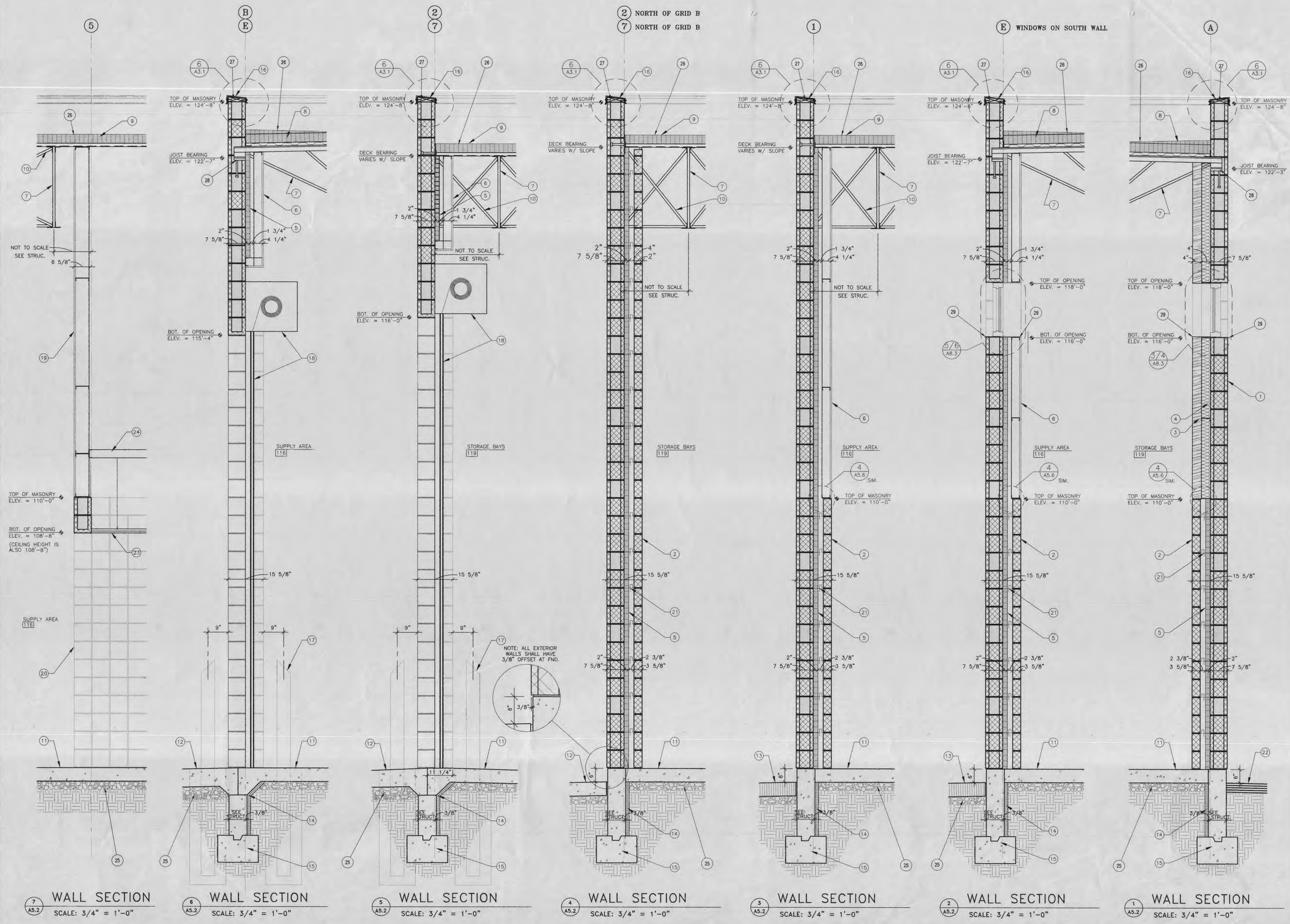

7 A5.2 WALL SECTION
SCALE: 3/4" = 1'-0"

6 A5.2 WALL SECTION
SCALE: 3/4" = 1'-0"

5 A5.2 WALL SECTION
SCALE: 3/4" = 1'-0"

4 A5.2 WALL SECTION
SCALE: 3/4" = 1'-0"

3 A5.2 WALL SECTION
SCALE: 3/4" = 1'-0"

2 A5.2 WALL SECTION
SCALE: 3/4" = 1'-0"

1 A5.2 WALL SECTION
SCALE: 3/4" = 1'-0"

REFERENCE NOTES

1. 8" CMU BLOCK WITH HORIZONTAL BOND BEAMS @ 32" O.C. (TYP.)
2. 4" CMU VENEER WITH HORIZONTAL BOND BEAMS @ 32" O.C. (TYP.)
3. 4" ACOUSTICAL PANELS OVER 4" METAL STUDS @ 24" O.C. TO STRUCTURE ABOVE (TYP.)
4. BATT INSULATION, R-11
5. 2" RIGID WALL INSULATION WITH VERTICAL "Z" FURRING CHANNELS @ 24" O.C. (TYP.)
6. 5/8" GYPSUM BOARD ON 3 5/8" METAL STUDS @ 24" O.C. TO STRUCTURE ABOVE (TYP.)
7. STEEL JOIST (SEE STRUCT.)
8. TAPERED INSULATION CRICKET ON RIGID ROOF INSULATION ON 1 1/2" METAL DECK
9. RIGID ROOF INSULATION ON 1 1/2" METAL DECK (TYP.)
10. METAL BRACING AS REQUIRED (SEE STRUCT.)
11. CONCRETE SLAB (SEE STRUCT.)
12. CONCRETE PAD (SEE CIVIL)
13. ASPHALT PAVING (SEE CIVIL)
14. RIGID FOUNDATION INSULATION (TYP.)
15. SCHEDULED FOOTING & FOUNDATION (SEE STRUCT.)
16. METAL COPING (SEE SHEET A3.1)
17. 4" HIGH METAL BOLLARD (SEE 3/A2.1)
18. OVERHEAD DOOR HOUSING AND TRACK
19. 5/8" GYPSUM BOARD ON 7 1/4" STEEL STUDS AS SHOWN AT 24" O.C. FROM 10'-0" A.A.F. TO STRUCTURE ABOVE
20. 8" CMU WALL BEYOND
21. PROVIDE ADJUSTABLE WALL TIES FOR SEISMIC BRACING @ 16" O.C. VERTICALLY
22. FINISHED GRADE (SEE CIVIL)
23. SCHEDULED CEILING
24. 3 5/8" METAL STUD SUPPORT FRAMING FOR CEILING SYSTEMS
25. 4" MIN. DRAINAGE FILL
26. SINGLE-PLY MEMBRANE, FULLY ADHERED
27. WOOD BLOCKING
28. BEARING PLATE (SEE STRUCT.)
29. METAL SILL FLASHING (PAINTED)

GENERAL NOTES

1.

2. INTERIOR MASONRY WALL FACES SHALL BE ALLIGNED WITH GRIDS

AIR NATIONAL GUARD CIVIL ENGINEERING

UTAH AIR NATIONAL GUARD BASE

795 NORTH 2200 WEST
SALT LAKE CITY, UTAH
84116-2999

WALL SECTIONS

DATE: APRIL 1, 1996
REVISED:
DRAWN BY: R. HANSEN

DRAWING NO: A5.2

ELECTRONIC SECURITY SQUADRON FACILITY – UTAH AIR NATIONAL GUARD
PROJ. NO. USEB 939661

FFKR Architects Planners II
132 Pierpont Ave. Suite 200
Salt Lake City, Utah 84101
Telephone 801 521-6186

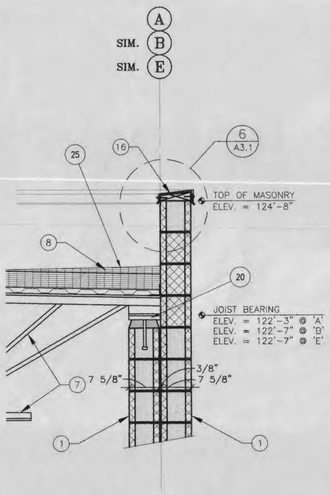

78 A5.3 COLUMN SECTION
SCALE: 3/4" = 1'-0"

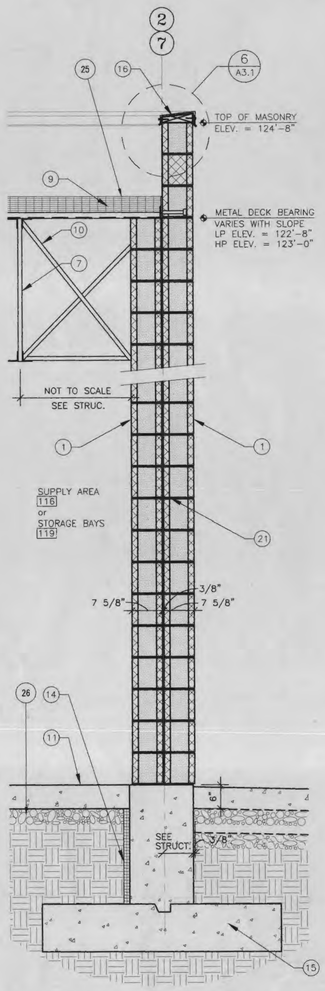

7A A5.3 COLUMN SECTION
SCALE: 3/4" = 1'-0"

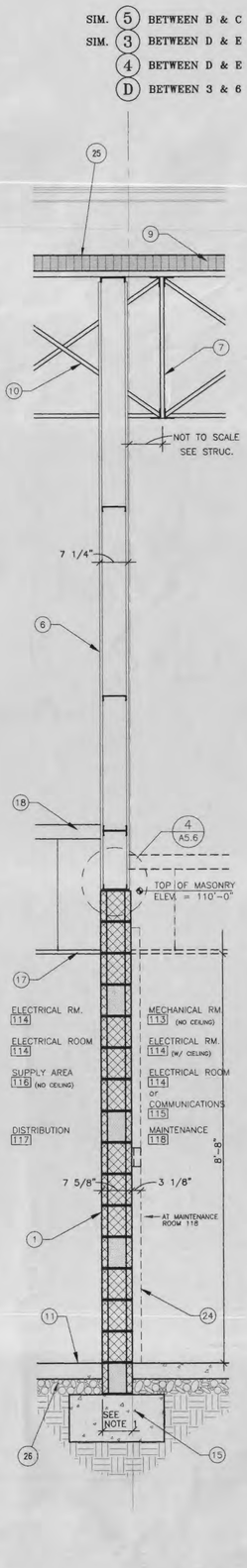

6 A5.3 WALL SECTION
SCALE: 3/4" = 1'-0"

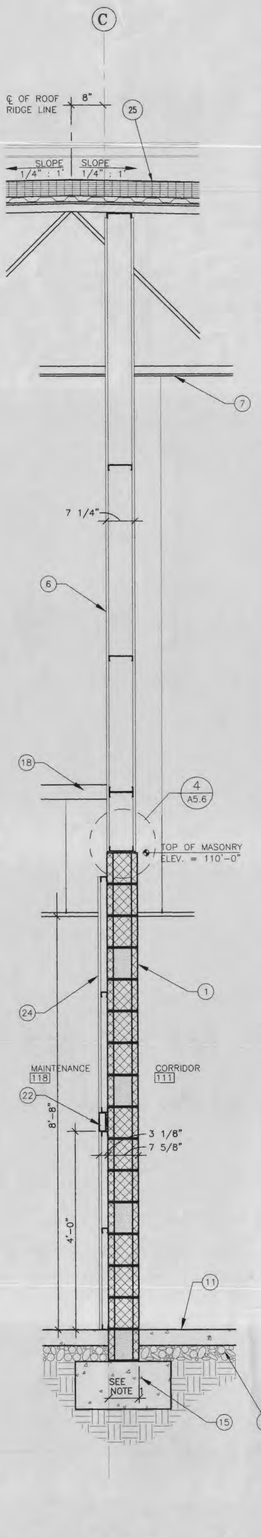

5 A5.3 WALL SECTION
SCALE: 3/4" = 1'-0"

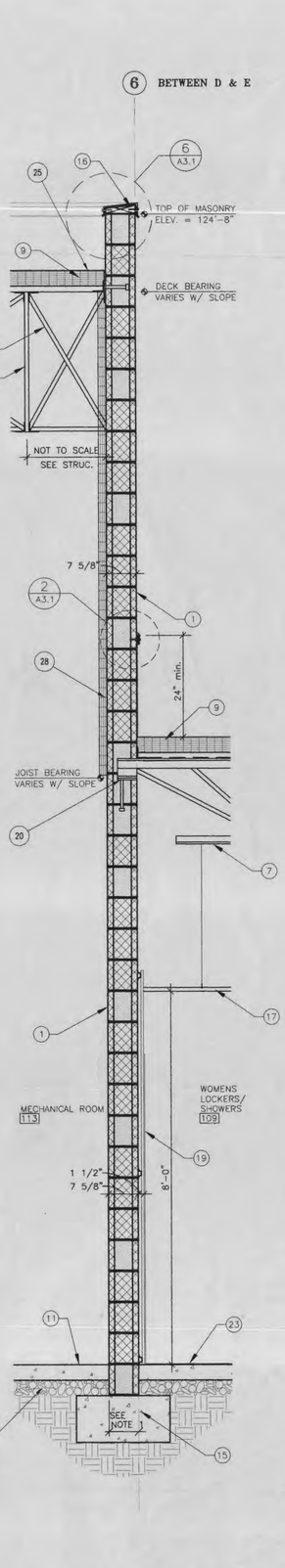

4 A5.3 WALL SECTION
SCALE: 3/4" = 1'-0"

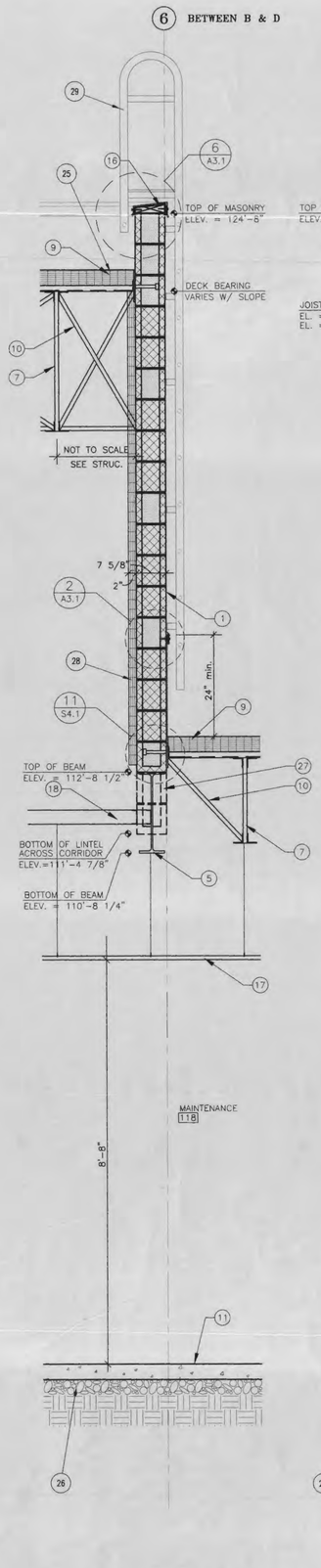

3 A5.3 WALL SECTION
SCALE: 3/4" = 1'-0"

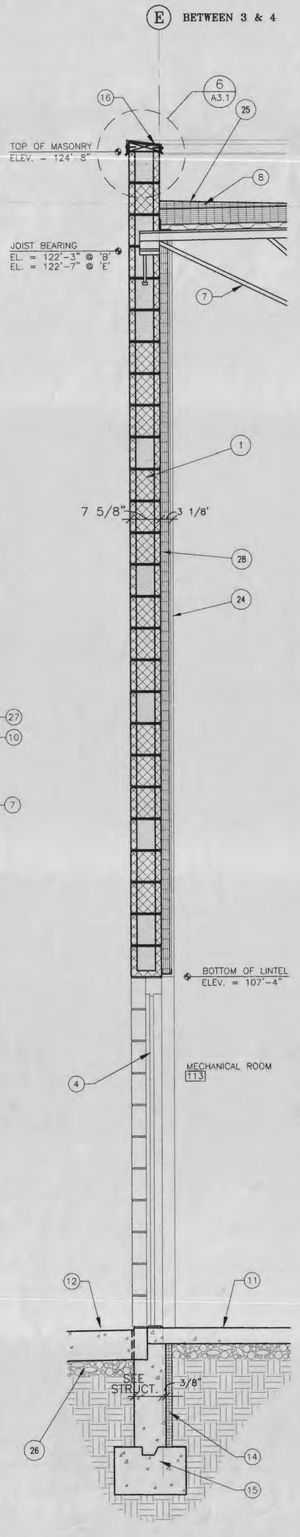

2 A5.3 WALL SECTION
SCALE: 3/4" = 1'-0"

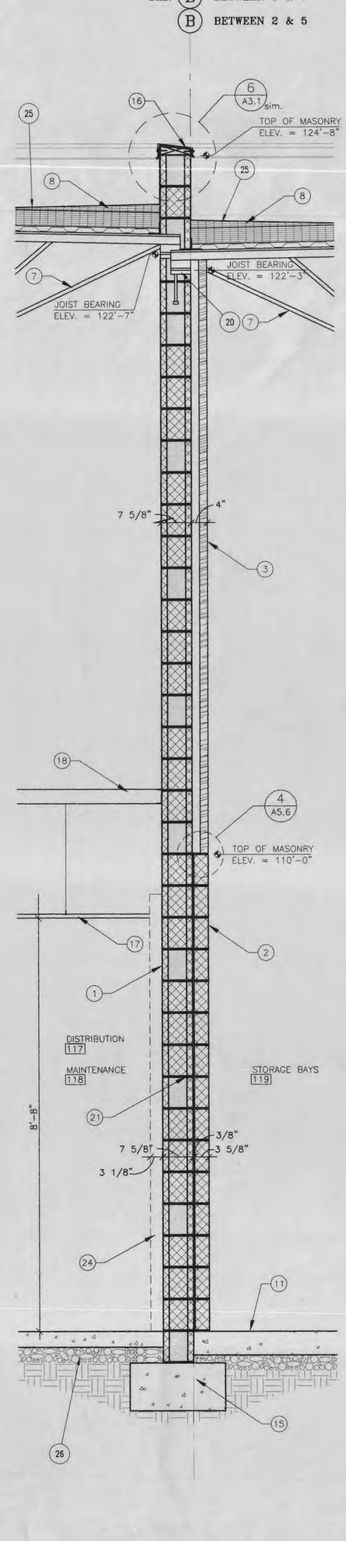

1 A5.3 WALL SECTION
SCALE: 3/4" = 1'-0"

REFERENCE NOTES

1. 8" CMU BLOCK WITH HORIZONTAL BOND BEAMS @ 32" O.C. (SEE STRUCT.)
2. 4" CMU VENEER WITH HORIZONTAL BOND BEAMS @ 32" O.C. (TYP.)
3. 2" ACOUSTIC PANELS OVER 2" METAL STUDS @ 24" O.C. TO STRUCTURE ABOVE (TYP.)
4. SCHEDULED DOOR & FRAME
5. STEEL BEAM (SEE STRUCT.)
6. 5/8" GYPSUM BOARD ON 7 1/4" METAL STUDS (BOTH SIDES) @ 24" O.C. TO STRUCTURE ABOVE (TYP.)
7. STEEL JOIST (SEE STRUC.)
8. TAPERED INSULATION CRICKET ON 4" RIGID ROOF INSULATION ON 5/8" G.B. BASE OVER 1 1/2" METAL DECK
9. 4" RIGID ROOF INSULATION ON 5/8" G.B. OVER 1 1/2" METAL DECK (TYP.)
10. METAL BRACING AS REQUIRED (SEE STRUCT.)
11. CONCRETE SLAB (SEE STRUCT.)
12. CONCRETE PAD (SEE CIVIL)
13. ASPHALT PAVING (SEE CIVIL)
14. 2" RIGID FOUNDATION INSULATION (TYP.)
15. SCHEDULED FOOTING & FOUNDATION (SEE STRUCT.)
16. METAL COPING (PAINTED)
17. SCHEDULED CEILING, SEE SHT. A7.1
18. SUSPENDED CEILING SUPPORT FRAMING
19. CERAMIC TILE ON 5/8" CEMENTITIOUS BACKER BOARD ON 7/8" HAT CHANNEL FURRING @ 24" O.C.
20. BEARING PLATE (SEE STRUCT.)
21. PROVIDE ADJUSTABLE WALL TIES FOR SEISMIC BRACING @ 16" O.C. VERTICALLY
22. ELECTRICAL RACEWAY (SEE ELEC.)
23. CERAMIC TILE ON CONCRETE SLAB. SLOPE TO DRAINS (SEE PLANS)
24. 2 1/2" METAL STUD FURRING W/ 5/8" G.B.
25. FULLY ADHERED MEMBRANE
26. COMPACTED FILL (SEE STRUCT.)
27. MASONRY LINTEL OVER CORRIDOR (SEE STRUCT.)
28. 2" RIGID INSULATION
29. FABRICATED METAL LADDER (PAINTED)

GENERAL NOTES

1. INTERIOR MASONRY WALL FACES SHALL BE ALLIGNED WITH GRIDS
2. FOR EXTERIOR SLAB OR PAVEMENT SLOPES, SEE CIVIL

AIR NATIONAL GUARD
CIVIL ENGINEERING

UTAH AIR NATIONAL GUARD BASE

785 NORTH 2200 WEST
SALT LAKE CITY, UTAH
84116-2999

WALL SECTIONS

ELECTRONIC SECURITY SQUADRON FACILITY – UTAH AIR NATIONAL GUARD
PROJ. NO. USEB 939661

FFKR Architects Planners II
132 Pierpont Ave. Suite 200
Salt Lake City, Utah 84101
Telephone 801 521-6186

DATE: APRIL 1, 1996
REVISED:
DRAWN BY: R. HANSEN
DRAWING NO: A5.3

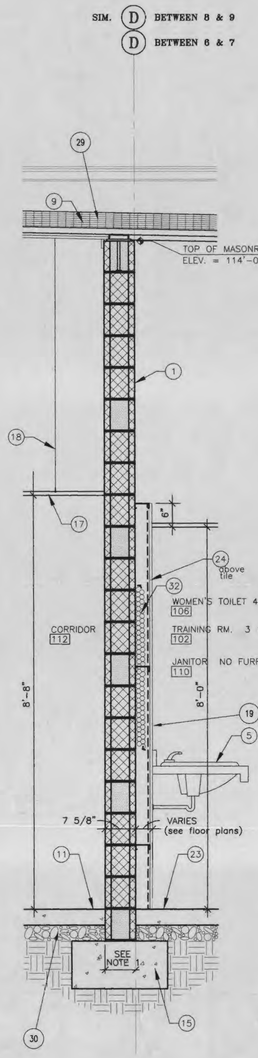

7 WALL SECTION
A5.4
SCALE: 3/4" = 1'-0"

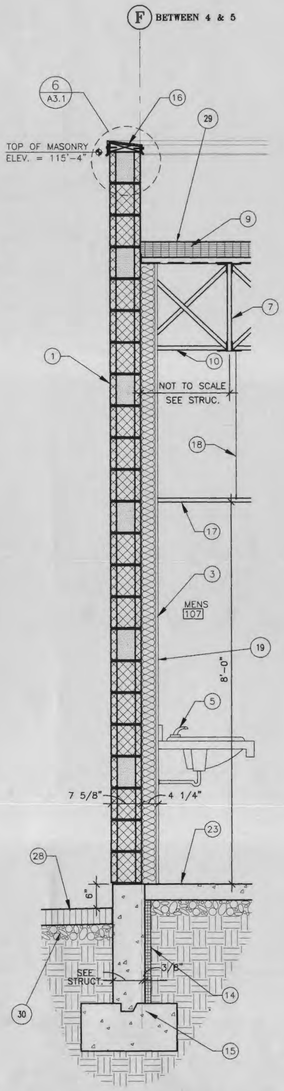

6 WALL SECTION
A5.4
SCALE: 3/4" = 1'-0"

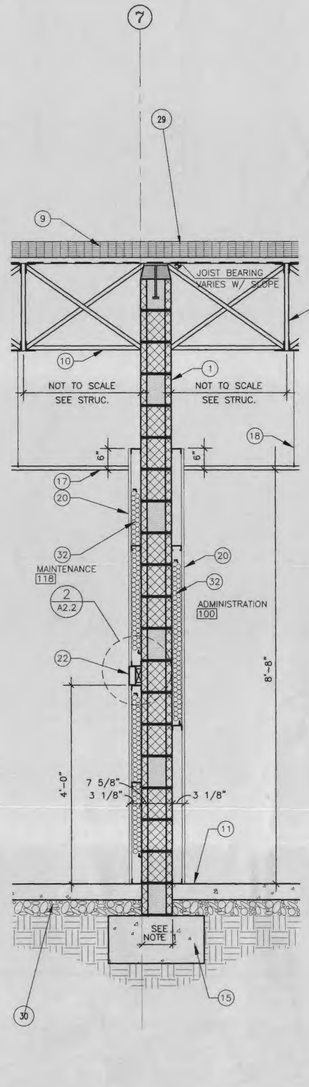

5 WALL SECTION
A5.4
SCALE: 3/4" = 1'-0"

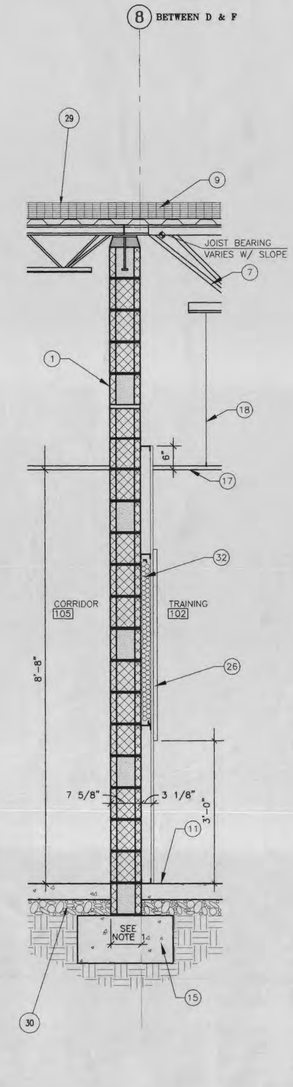

4 WALL SECTION
A5.4
SCALE: 3/4" = 1'-0"

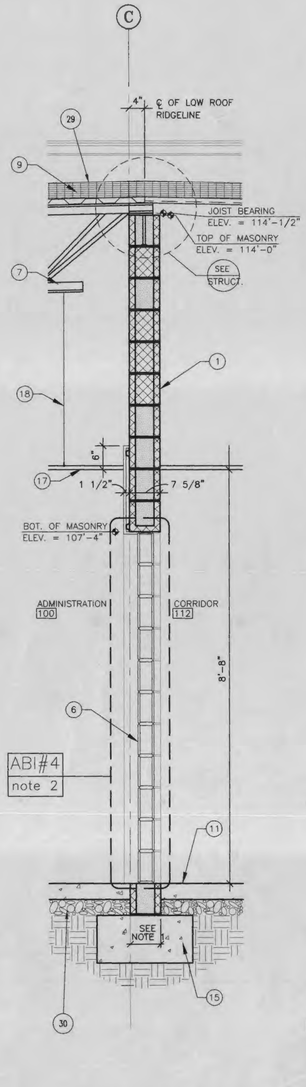

3 WALL SECTION
A5.4
SCALE: 3/4" = 1'-0"

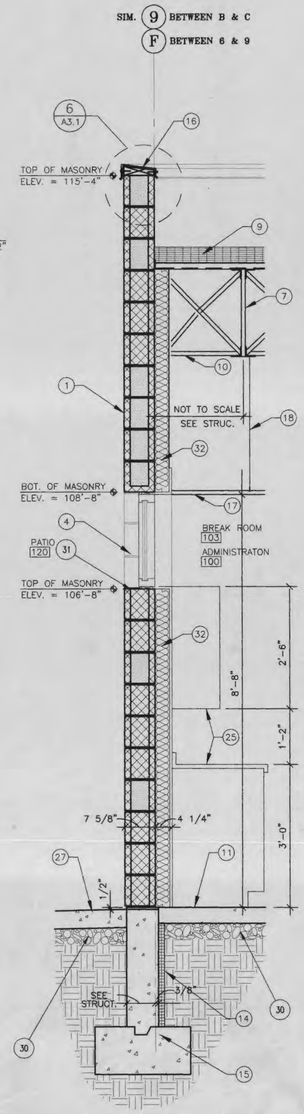

2 WALL SECTION
A5.4
SCALE: 3/4" = 1'-0"

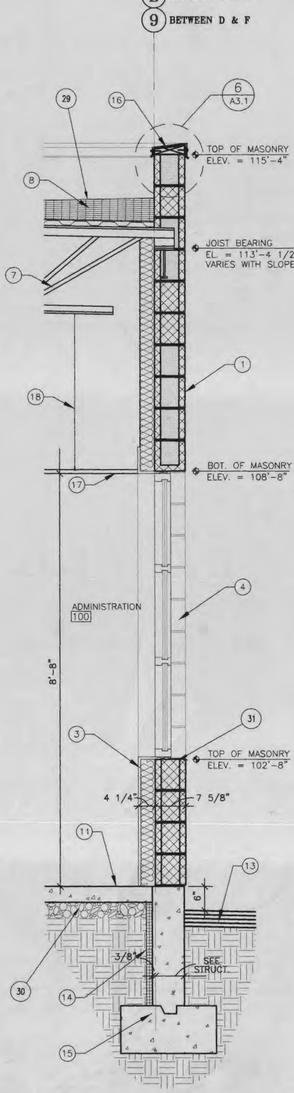

1 WALL SECTION
A5.4
SCALE: 3/4" = 1'-0"

REFERENCE NOTES

1. 8" CMU BLOCK WITH HORIZONTAL BOND BEAMS @ 32" O.C. (TYP.)
2. 5/8" GYPSUM BOARD ON 7/8" CHANNEL
3. 5/8" GYPSUM BOARD ON 3 5/8" METAL STUDS @ 24" O.C. WITH BATT INSULATION TO STRUCTURE ABOVE
4. SCHEDULED WINDOW AND FRAME
5. SCHEDULED PLUMBING FIXTURE (SEE PLUMB)
6. 4"x8"x8" NOM. GLASS BLOCK, SEE NOTE 2
7. STEEL JOIST (SEE STRUC.T)
8. TAPERED INSULATION CRICKET ON 4" RIGID ROOF INSULATION ON 1 1/2" METAL DECK
9. 4" RIGID ROOF INSULATION OVER 1 1/2" METAL DECK (TYP.)
10. METAL BRACING AS REQUIRED (SEE STRUCT.)
11. CONCRETE SLAB (SEE STRUCT)
12. CONCRETE PAD (SEE CIVIL)
13. FINISH GRADE (SEE CIVIL)
14. RIGID FOUNDATION INSULATION (TYP.)
15. SCHEDULED FOOTING & FOUNDATION (SEE STRUC.)
16. METAL COPING (SEE SPECS.)
17. SCHEDULED CEILING
18. SUSPENDED CEILING SUPPORTS
19. CERAMIC TILE ON 5/8" CEMENTITIOUS BACKER BOARD ON 7/8" FURRING CHANNEL @ 24" O.C. TO 6" ABOVE CEILING
20. 5/8" GYP. OVER 2 1/2" FURRING STUDS @ 24" o.c. TO 6" ABOVE CEILING W/ BATT INSULATION
21. PROVIDE ADJUSTABLE WALL TIES FOR SEISMIC BRACING @ 16" O.C. VERTICALLY
22. ELECTRICAL RACEWAY (SEE ELEC.)
23. CERAMIC TILE ON CONCRETE SLAB. SLOPE TO DRAINS (SEE PLANS)
24. 5/8" GYPSUM BOARD ON 3 5/8" METAL STUDS @ 24" O.C. WITH BATT INSULATION TO 6" ABOVE CEILING
25. CASEWORK
26. MARKERBOARD
27. CONCRETE PATIO (SEE CIVIL)
28. ASPHALT PAVING (SEE CIVIL)
29. FULLY ADHERED SINGLE-PLY MEMBRANE
30. 4' DRAINAGE FILL
31. METAL SILL FLASHING (PAINTED)
32. BATT INSULATION (SEE SPECS)

GENERAL NOTES

1. INTERIOR MASONRY WALL FACES SHALL BE ALLIGNED WITH GRIDS
2. GLASS BLOCK MASONRY TO BE ELIMINATED UNLESS ABI #4 IS SELECTED. IF ABI #4 IS NOT SELECTED AS PART OF THIS WORK, WHERE GLASS BLOCK IS SHOWN ON THE DRAWING, THE BASE BID IS TO INCLUDE 8" CONCRETE MASONRY UNITS WITH HORIZONTAL BOND BEAMS @32" o.c.; TO CREATE A COMPLETE WALL SEPARATION AS DEPICTED ON THE DRAWINGS, INCLUDING APPROPRIATE DOOR JAMB DETAILING.

AIR NATIONAL GUARD
CIVIL ENGINEERING

UTAH AIR NATIONAL GUARD BASE

765 NORTH 2200 WEST
SALT LAKE CITY, UTAH
84116-2995

WALL SECTIONS

DATE: APRIL 1, 1996
REVISED:

DRAWING NO:
A5.4

ELECTRONIC SECURITY SQUADRON FACILITY – UTAH AIR NATIONAL GUARD
PROJ. NO. USEB 939661

FFKR Architects Planners II
132 Pierpont Ave. Suite 200
Salt Lake City, Utah 84101
Telephone 801 521-6186

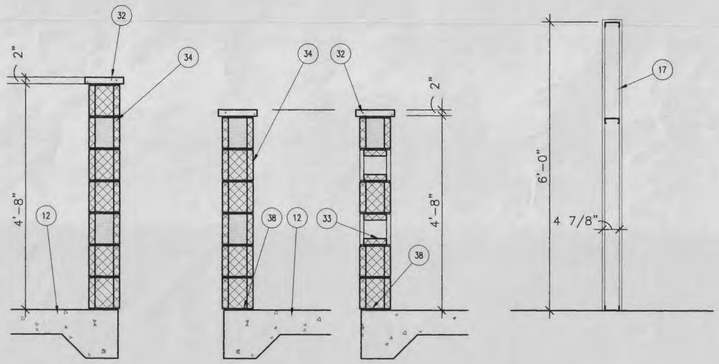

THRU WALL

THRU ROTATED BLOCKS

NOTE: REINFORCE PARTITION USING 18 GA. STEEL STUDS ANCHORED TO WALL & FLOOR

9/A5.5 TYPE F
SCALE: 1 1/2" = 1'-0"
AT DUMPSTER (SEE CIVIL)

8/A5.5 TYPE E
SCALE: 1 1/2" = 1'-0"
AT PATIO

7/A5.5 TYPE D
SCALE: 1 1/2" = 1'-0"
AT DISTRIBUTION 117

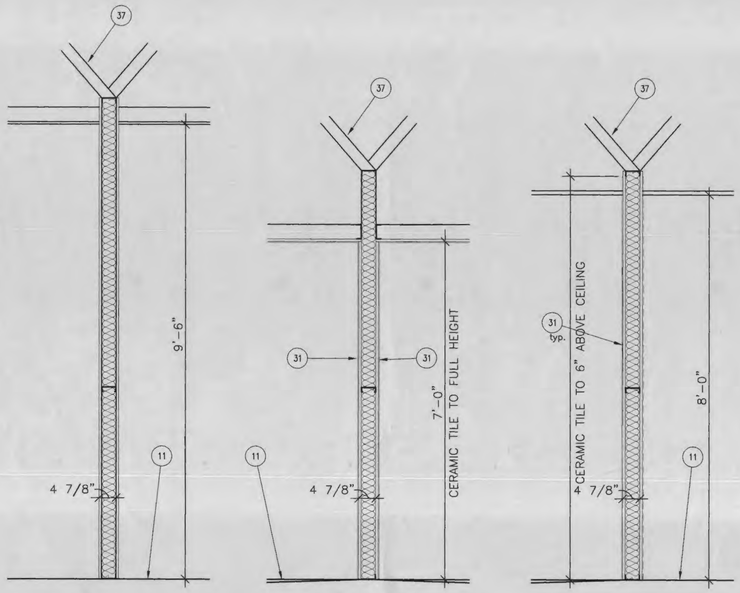

6/A5.5 TYPE C
SCALE: 1 1/2" = 1'-0"

5/A5.5 TYPE B
SCALE: 1 1/2" = 1'-0"
AT SHOWERS

4/A5.5 TYPE A
SCALE: 1 1/2" = 1'-0"
AT RESTROOMS

6/A5.1 BETWEEN E & F
F AT LOCKER AREA ONLY

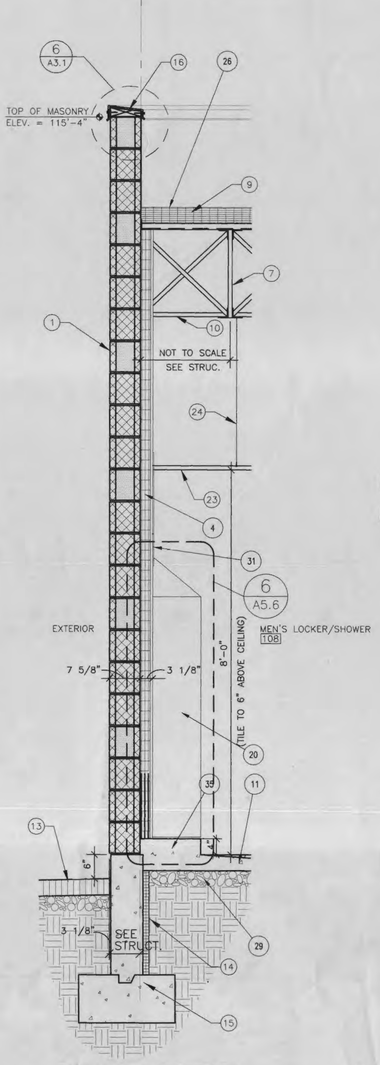

5/A5.5 WALL SECTION
SCALE: 3/4" = 1'-0"

NOT USED

4/A5.5 WALL SECTION
SCALE: 3/4" = 1'-0"

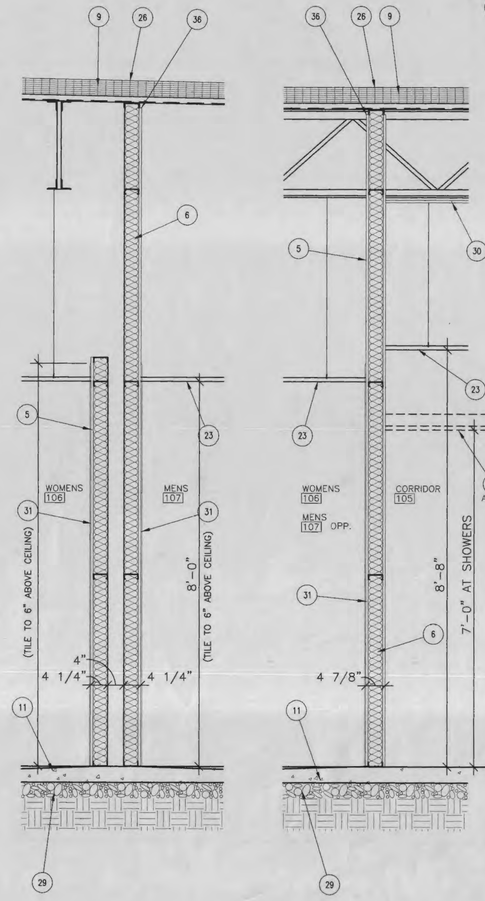

3/A5.5 WALL SECTION
SCALE: 3/4" = 1'-0"

2/A5.5 WALL SECTION
SCALE: 3/4" = 1'-0"

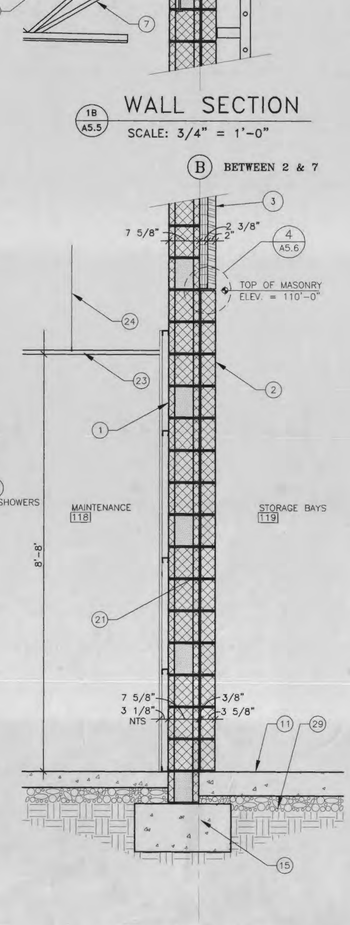

1A/A5.5 WALL SECTION
SCALE: 3/4" = 1'-0"

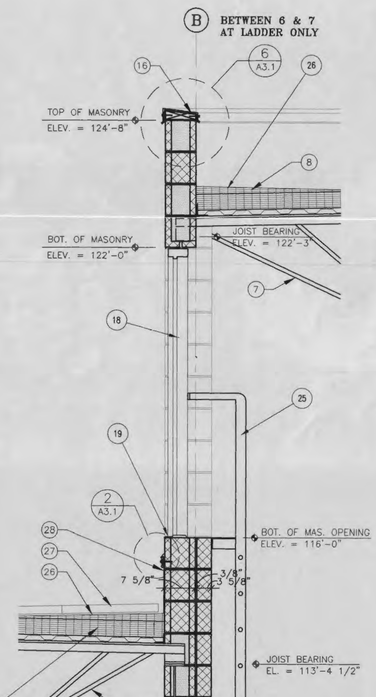

1B/A5.5 WALL SECTION
SCALE: 3/4" = 1'-0"

REFERENCE NOTES

1. 8" CONCRETE MASONRY W/HORIZONTAL BOND BEAMS @ 32" O.C. (SEE STRUCT.)
2. 4" CMU WITH HORIZONTAL BOND BEAMS @ 32" O.C. (SEE STRUCT.)
3. 2" ACOUSTIC PANEL ON 2" RIGID INSULATION W/ "Z" FURRING SPACED HORIZONTALLY 24" O.C.
4. 2 1/2" STEEL STUD FURRING WITH 2" RIGID INSULATION @ 24" O.C.
5. 3 5/8" STEEL STUD WALL TO STRUCTURE W/ 5/8" G.B. BOTH SIDES (OR AS SHOWN)
6. 3 1/2" BATT INSULATION METAL STUDS @ 24" O.C. TO STRUCTURE ABOVE (TYP.)
7. STEEL JOIST (SEE STRUC.)
8. TAPERED INSULATION CRICKET ON 4" RIGID ROOF INSULATION ON 1 1/2" METAL DECK
9. RIGID ROOF INSULATION ON 1 1/2" METAL DECK (TYP.)
10. METAL BRACING AS REQUIRED (SEE STRUCT.)
11. CONCRETE SLAB, SLOPE AS REQ'D.
12. CONCRETE PAD (SEE CIVIL)
13. ASPHALT PAVING (SEE CIVIL)
14. RIGID FOUNDATION INSULATION (TYP.)
15. SCHEDULED FOOTING & FOUNDATION (SEE STRUC.)
16. METAL COPING (PAINTED)
17. 6'-0" HIGH STEEL STUD PARTITION
18. SCHEDULED DOOR AND FRAME
19. METAL THRESHOLD FLASHING
20. METAL LOCKERS
21. PROVIDE ADJUSTABLE WALL TIES FOR SEISMIC BRACING @ 16" O.C. VERTICALLY (SEE STRUCT.)
22. FINISHED GRADE (SEE CIVIL)
23. SCHEDULED CEILING
24. SUSPENDED CEILING SUPPORTS
25. PREFABRICATED STL. LADDER (PAINTED) SEE DETAIL 8/A5.6
26. FULLY ADHERED MEMBRANE
27. PRECAST ROOF PAVERS
28. ROOF TERMINATION STRIP
29. 4" DRAINAGE FILL
30. 2 LAYERS 5/8" G.B. FASTENED TO METAL DECK FOR 1 HR. FIRE RATING
31. CERAMIC TILE ON CEMETITIOUS BACKER BOARD ON 3 5/8" METAL STUD FRAMING
32. 2" X 18" X 24" PRECAST CONC. WALL CAP
33. 6" X 8" X 16" CONCRETE MASONRY
34. REINFORCED CONC. MASONRY PARTITION
35. RAISED CONCRETE CURB FOR LOCKERS, VERIFY DEPTH WITH LOCKER MANUFACTURER
36. SLIP JOINT CHANNEL
37. SEISMIC BRACING TO STRUCTURE
38. WEEP HOLES

GENERAL NOTES

1. INTERIOR MASONRY WALL FACES SHALL BE ALLIGNED WITH GRIDS

AIR NATIONAL GUARD CIVIL ENGINEERING

UTAH AIR NATIONAL GUARD BASE

765 NORTH 2200 WEST
SALT LAKE CITY, UTAH
84116-2999

WALL SECTIONS/PARTITIONS

ELECTRONIC SECURITY SQUADRON FACILITY – UTAH AIR NATIONAL GUARD
PROJ. NO. USEB 939661

FFKR Architects Planners II
132 Pierpont Ave. Suite 200
Salt Lake City, Utah 84101
Telephone 801 521-8186

DATE: APRIL 1, 1996
REVISED:
DRAWN BY: R. HANSEN
DRAWING NO: A5.5

NOT USED

NOT USED

NOT USED

NOT USED

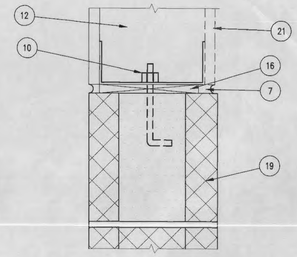

WALL JOINT DETAIL | SCALE 4 | NTS | A5.6

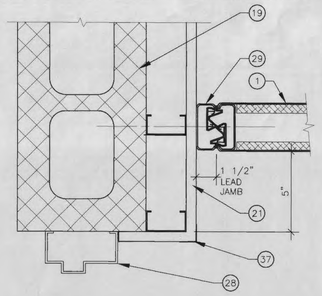

FOLDING PARTITION DETAIL | SCALE 3 | 3" = 1'-0" | A5.6

NOT USED

NOT USED

NOT USED

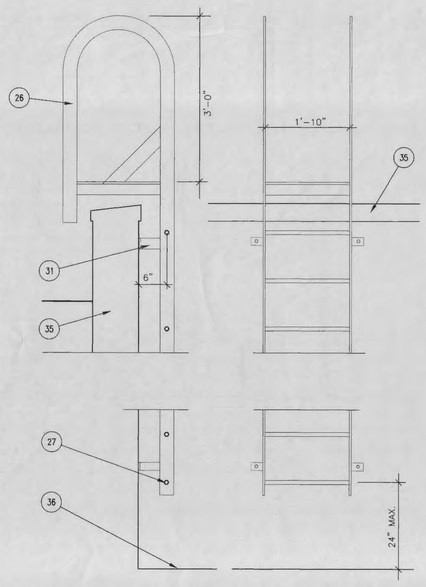

METAL LADDER DETAIL | SCALE NTS | 9 | A5.6

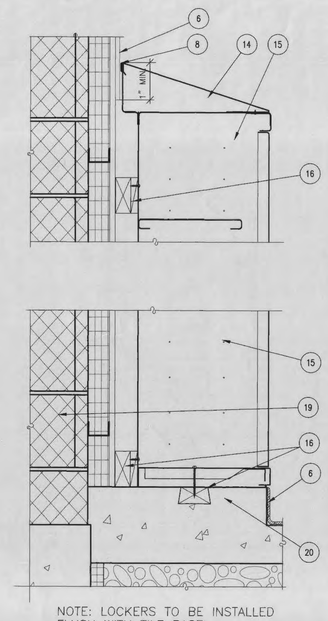

NOTE: LOCKERS TO BE INSTALLED FLUSH WITH TILE BASE.

METAL LOCKER DETAILS | SCALE NTS | 6 | A5.6

NOT USED

NOT USED

NOT USED

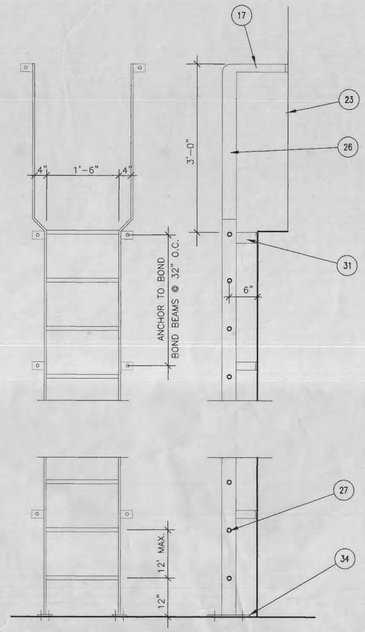

METAL LADDER DETAIL | ELEVATION NTS | 8 | A5.6

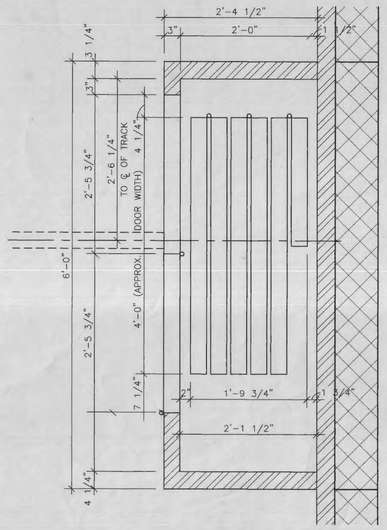

POCKET DOOR PLAN | PLAN SCALE: 1" = 1'-0" | 5 | A5.6

NOT USED

NOT USED

NOT USED

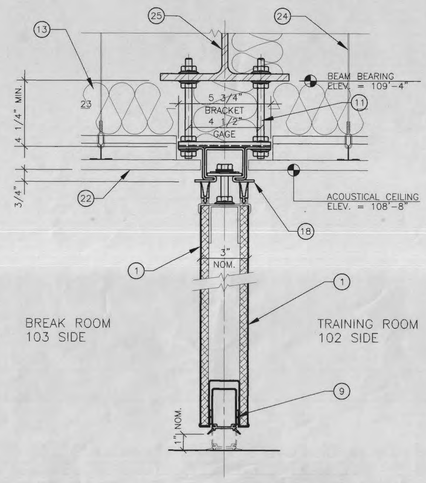

FOLDING DOOR SECTION | VERTICAL SCALE: 3" = 1'-0" | 1 | A5.6

REFERENCE NOTES

1. DOOR PANEL (SEE SPECS.)
2. MASONRY ANCHORS
3. NOT USED
4. VINYL BOTTOM SEAL
5. 7/8" HAT CHANNEL @ 16" O.C.
6. CERAMIC TILE
7. SEALANT
8. END CAP
9. AUTOMATIC DROP SEAL
10. ANCHOR BOLT
11. HANGER RODS TO STRUCTURE
12. STEEL STUD WALL (SIZE VARIES)
13. SOUND INSULATION TO EXTEND 3'-0" BOTH SIDES OF DOOR
14. SLOPED METAL LOCKER CAP
15. METAL LOCKERS
16. WOOD BLOCKING
17. 1/2" X 2" STL. EXTENSION (FASTEN TO DOOR FRAME)
18. STEEL TRACK (PAINTED)
19. MASONRY WALL
20. 4" CONCRETE CURB
21. 5/8" GYPSUM BOARD
22. LAY-IN ACOUSTICAL CEILING PANEL
23. FACE OF DOOR FRAME
24. CEILING SUPPORT WIRES
25. STEEL BEAM (SEE STRUCT.)
26. 1/2" X 3" STEEL SIDERAILS
27. 1"DIA. STEEL RUNGS
28. SCHEDULED H. M. DOOR & FRAME
29. FIXED LEAD JAMB
30. ADJUSTABLE LEAD JAMB
31. 1/2" X 2" FABRICATED STL. BRACKETS WELDED TO SIDE RAILS & ANCHORED TO WALL AT BOND BEAMS 32" O.C.
32. METAL CORNER BEAD (SEE SPECS.)
33. MTL. 'J' SHAPED TRIM (PAINT AS REQ.'D)
34. 4"X 8" X 1/2" STEEL PLT. WELDED TO SIDERAILS & ANCHORED TO FLOOR
35. PARAPET WALL
36. ROOF MEMBRANE
37. CORNER BEAD

AIR NATIONAL GUARD CIVIL ENGINEERING

UTAH AIR NATIONAL GUARD BASE

785 NORTH 2200 WEST
SALT LAKE CITY, UTAH
84116-2999

MISCELLANEOUS DETAILS

ELECTRONIC SECURITY SQUADRON FACILITY – UTAH AIR NATIONAL GUARD
PROJ. NO. USEB 939661

FFKR Architects Planners II
132 Pierpont Ave. Suite 200
Salt Lake City, Utah 84101
Telephone 801 521-6186

DATE: APRIL 1, 1996
REVISED:
DRAWN BY: R. HANSEN

DRAWING NO: A5.6

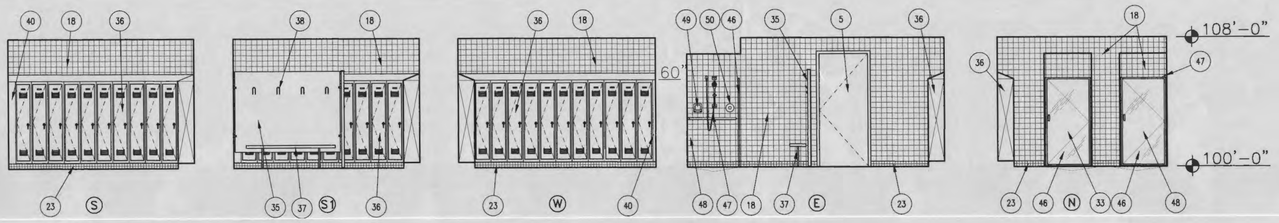

MENS LOCKERS 108/MENS SHOWERS 109

9 / A6.1 — SCALE: 1/4" = 1'-0"

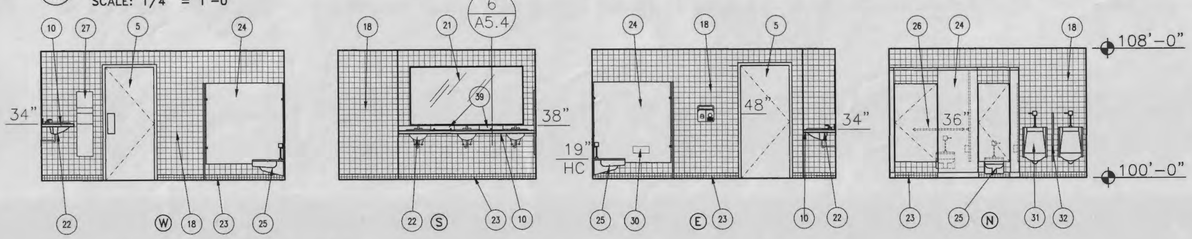

WOMENS SHOWERS/LOCKERS 110

8 / A6.1 — SCALE: 1/4" = 1'-0"

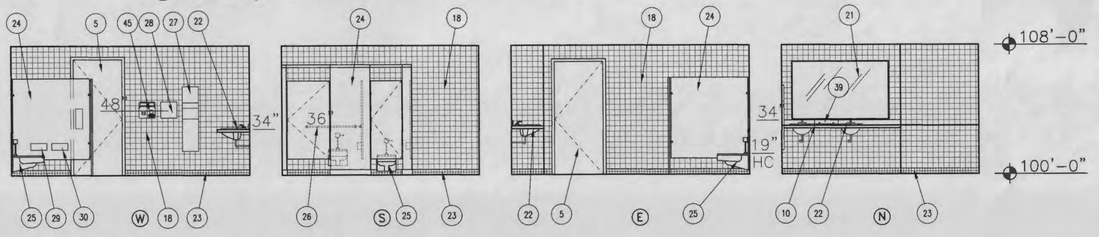

MENS RESTROOM 107

7 / A6.1 — SCALE: 1/4" = 1'-0"

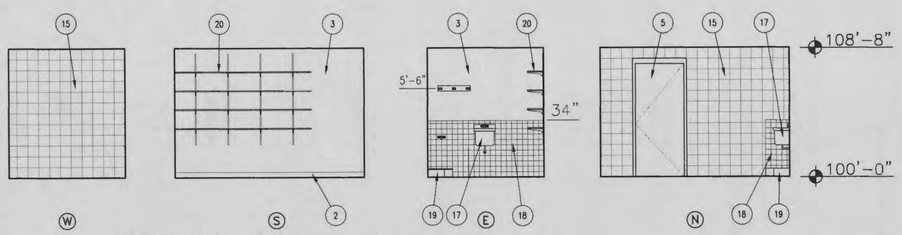

WOMENS RESTROOM 106

6 / A6.1 — SCALE: 1/4" = 1'-0"

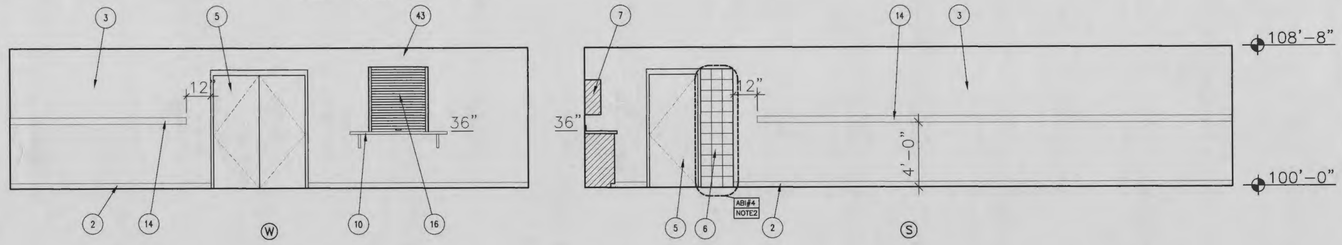

JANITOR 110

5 / A6.1 — SCALE: 1/4" = 1'-0"

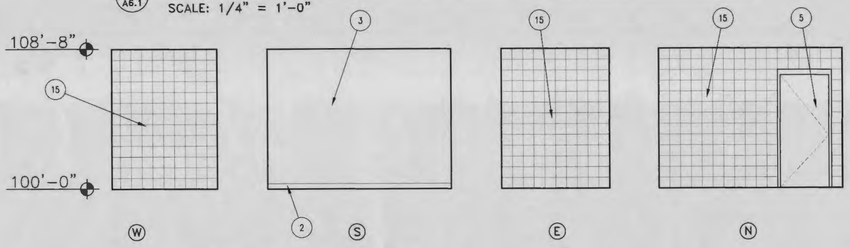

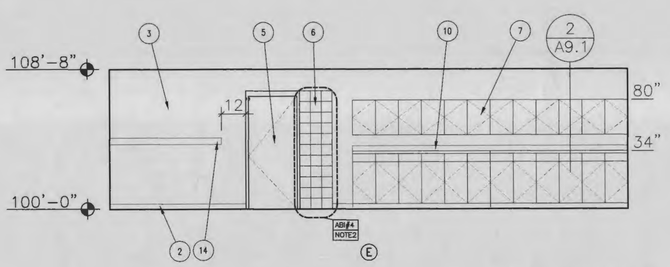

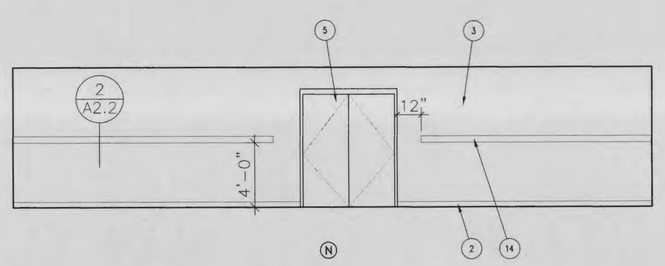

COMMUNICATIONS 115

5 / A9.1 — 4 / A6.1 — SCALE: 1/4" = 1'-0"

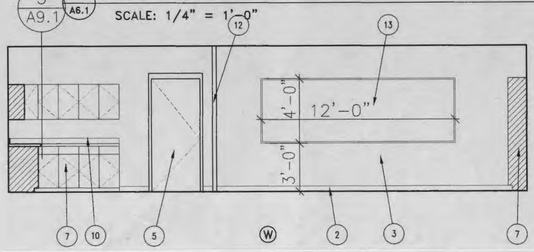

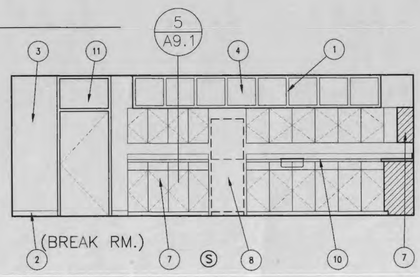

MAINTENANCE 118

3 / A6.1 — SCALE: 1/4" = 1'-0"

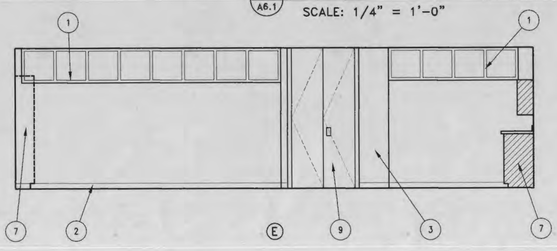

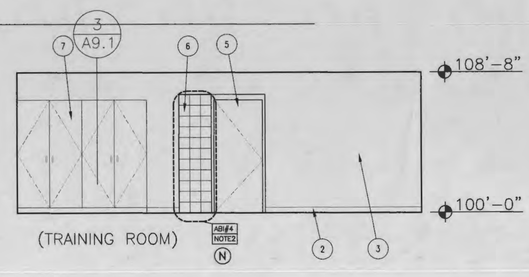

TRAINING ROOM 102 & BREAK ROOM 103

2 / A6.1 — SCALE: 1/4" = 1'-0"

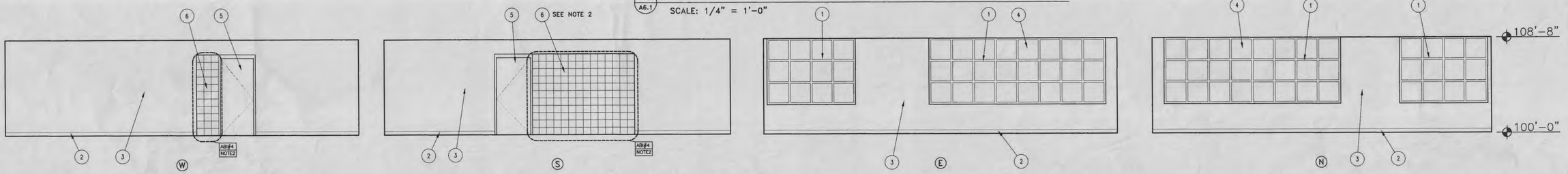

ADMINSTRATION AREA 100

1 / A6.1 — SCALE: 1/4" = 1'-0"

REFERENCE NOTES

1. PREFINISHED STEEL WINDOWS
2. SCHEDULED BASE
3. GYP.BD. (PAINTED)
4. SCHEDULED GLAZING
5. SCHEDULED DOOR & FRAME
6. GLASS BLOCK MASONRY, SEE NOTE 2
7. CASEWORK
8. REFRIGERATOR (NIC)
9. FOLDING PARTITION POCKET DOOR
10. PLASTIC LAMINATE COUNTER TOP
11. PREFINISHED STEEL ENTRY DOORS
12. FOLDING PARTITION
13. MARKER BOARD
14. PREFINISHED RACEWAY (SEE ELEC.)
15. CONCRETE MASONRY
16. COILING COUNTER DOOR
17. UTILITY SINK (SEE PLUMB.)
18. 4" X 4" CERAMIC TILE
19. MOP SINK
20. HEAVY DUTY ADJ. SHELVING
21. 3'X 7' FRAMED MIRROR
22. LAVATORY (SEE PLUMB.)
23. 2" X 2" CERAMIC TILE BASE
24. TOILET PARTITION
25. TOILET
26. GRAB BARS
27. PAPER TOWEL DISPENSER/ DISPOSAL
28. FEM. NAPKIN DISPENSER
29. FEM. NAPKIN DISPOSAL
30. TOILET PAPER DISP.
31. URINAL
32. URINAL SCREEN
33. SHOWER
34. SHOWERHEAD (SEE PLUMB.)
35. LOCKER ROOM PARTITION
36. METAL LOCKERS
37. LOCKER ROOM BENCH (3' WOMEN, 6' MEN)
38. CLOTHING HOOKS
39. SOAP DISPENSER, SEE SPECS
40. METAL LOCKER INFILL PANEL
41. H.C. SHOWER SEAT
42. H.C. SHOWER GRAB BARS
43. COILING DOOR HOUSING
44. S.S. SINK (SEE PLUMB.)
45. HAND DRYER
46. METAL FRAMED, TEMPERED GLASS SHOWER DOOR
47. H.C. SHOWER HEAD SEE SPECS.
48. H.C. SHOWER
49. SOAP HOLDER
50. SHOWER CONTROL

GENERAL NOTES

1. ALL FINISHES SHALL BE PAINTED OR SEALED UNLESS OTHERWISE NOTED.
2. GLASS BLOCK MASONRY TO BE ELIMINATED UNLESS ABI #4 IS SELECTED. IF ABI #4 IS NOT SELECTED AS PART OF THIS WORK, WHERE GLASS BLOCK IS SHOWN ON THE DRAWING, THE BASE BID IS TO INCLUDE 8" CONCRETE MASONRY UNITS WITH HORIZONTAL BOND BEAMS @32" o.c.; TO CREATE A COMPLETE WALL SEPARATION AS DEPICTED ON THE DRAWINGS, INCLUDING APPROPRIATE DOOR JAMB DETAILING.

AIR NATIONAL GUARD CIVIL ENGINEERING

UTAH AIR NATIONAL GUARD BASE

735 NORTH 2200 WEST
SALT LAKE CITY, UTAH
84116-2999

INTERIOR ELEVATIONS

ELECTRONIC SECURITY SQUADRON FACILITY – UTAH AIR NATIONAL GUARD
PROJ. NO. USEB 939661

FFKR Architects Planners II
132 Pierpont Ave. Suite 200
Salt Lake City, Utah 84101
Telephone 801 521-6186

DATE: APRIL 1, 1998
REVISED:
DRAWN BY: E. LOFGRAN

DRAWING NO: **A6.1**

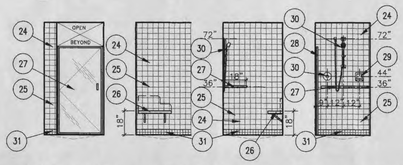

TYPICAL ACCESSIBLE SHOWER

5 / A6.2 SCALE: 1/4" = 1'-0"

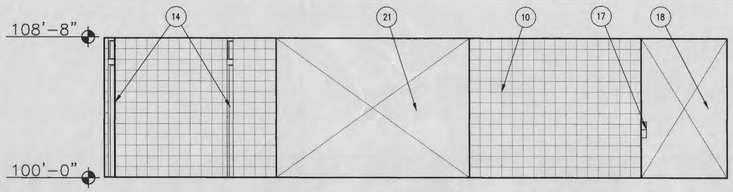

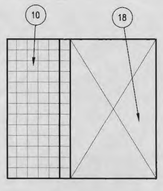

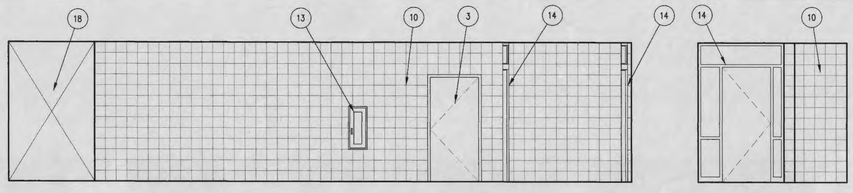

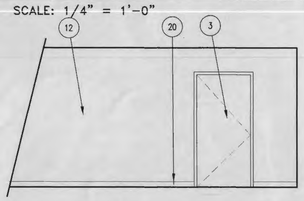

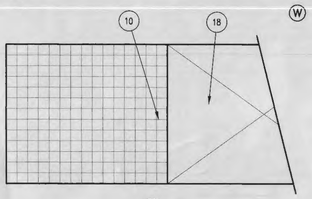

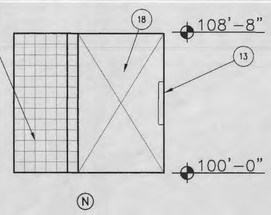

W E N

WOMEN'S TOILET ENTRY (MEN'S OPP.)

3 / A6.2 SCALE: 1/4" = 1'-0"

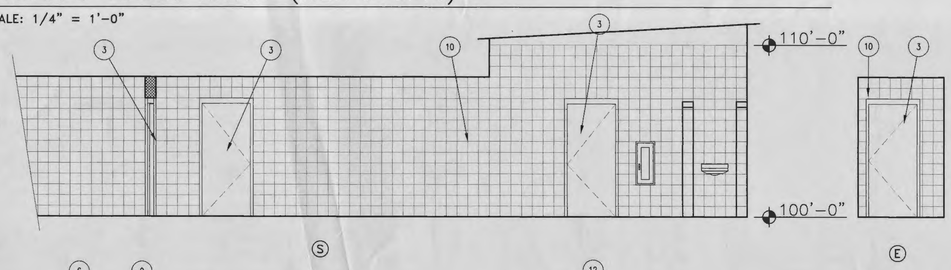

S E

VESTIBULE 104 & CORRIDOR 105

4 / A6.2 SCALE: 1/4" = 1'-0"

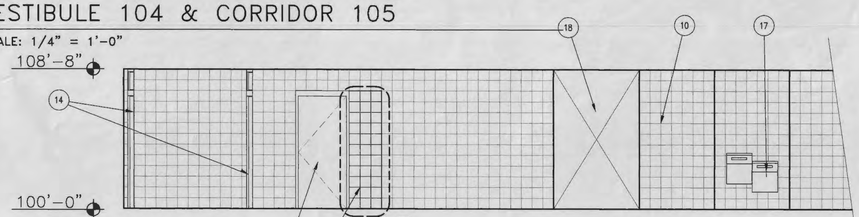

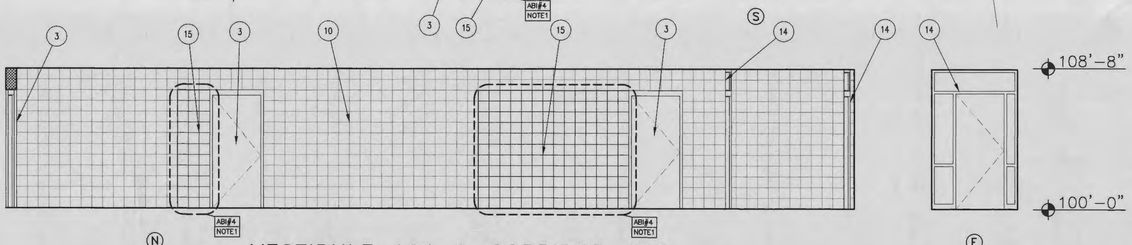

N S E

VESTIBULE 101 & CORRIDOR 112

2 / A6.2 SCALE: 1/4" = 1'-0"

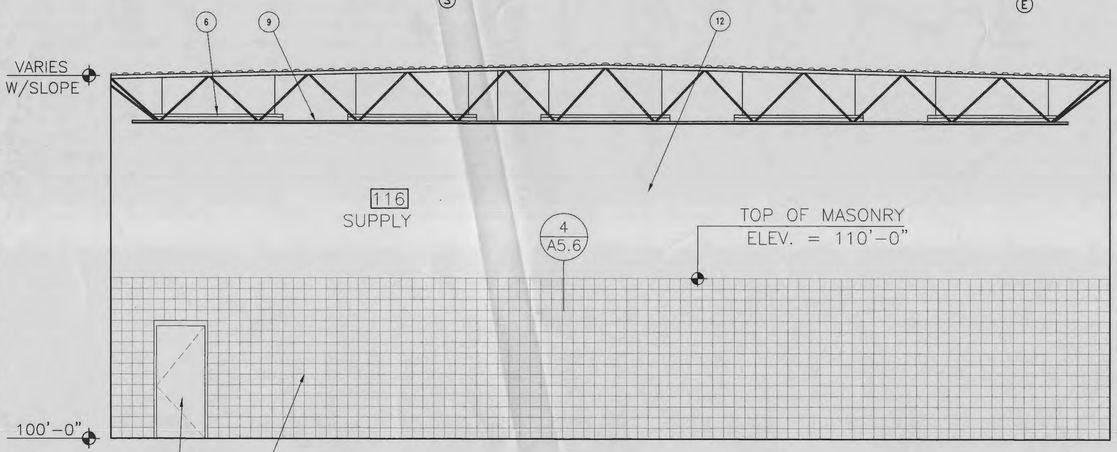

W

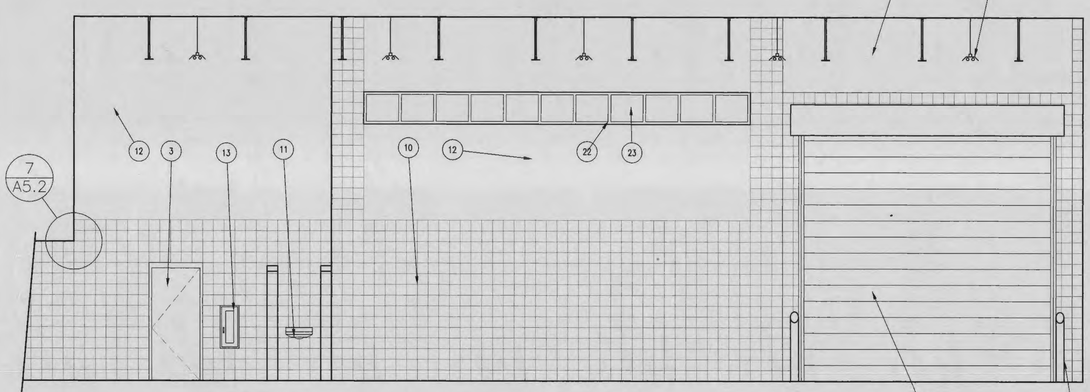

S

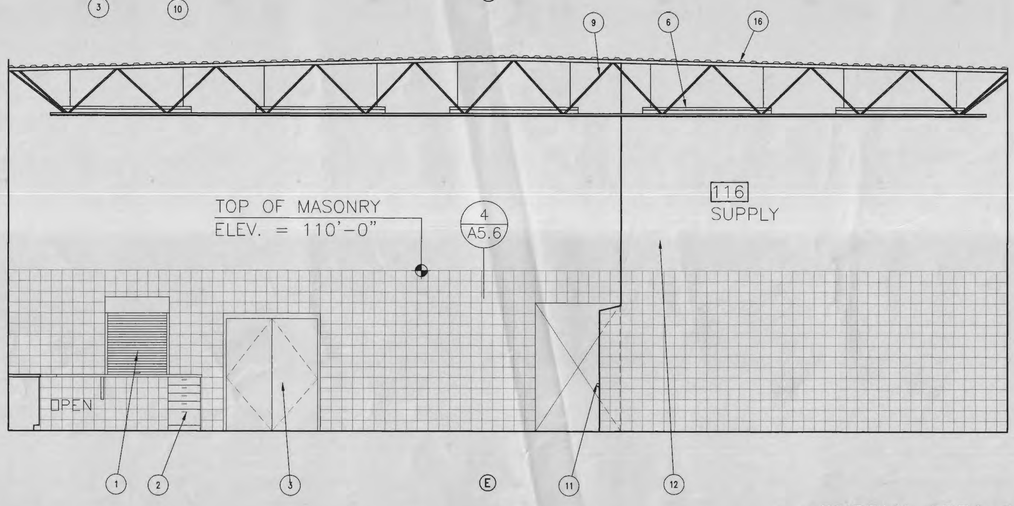

E

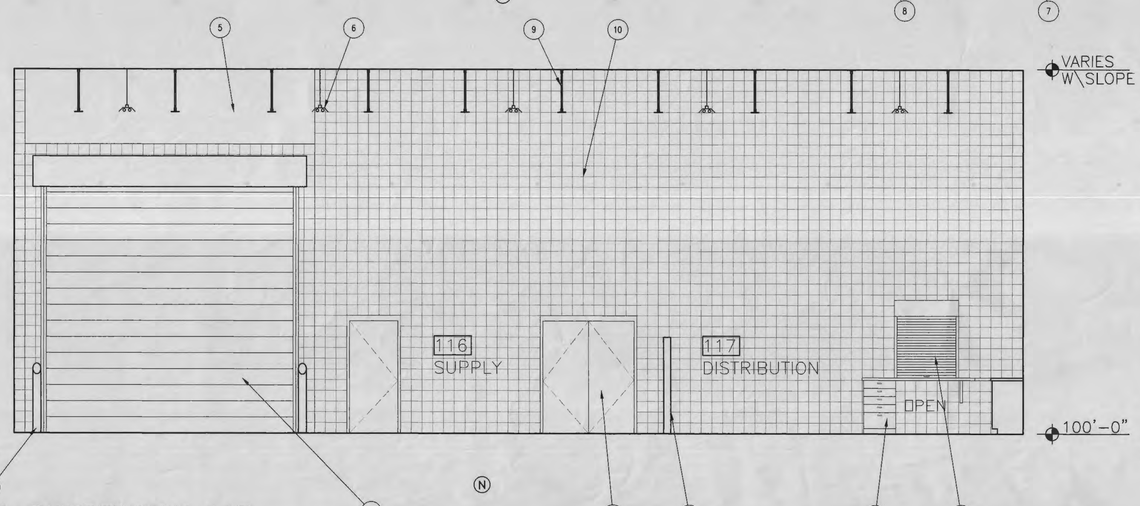

N

SUPPLY AREA 116 & DISTRIBUTION 117

1 / A6.2 SCALE: 1/4" = 1'-0"

REFERENCE NOTES

1. COILING COUNTER DOOR
2. CASEWORK
3. SCHEDULED DOOR & FRAME
4. 6'-0" HIGH PARTITION
5. METAL STUD WALL W/ 5/8" G.B.
6. LIGHT FIXTURE (SEE ELEC.)
7. STEEL BOLLARDS (PAINTED)
8. 15'-4" X 15'-4" INSULATED OVERHEAD COILING DOOR
9. STEEL JOISTS (BRACING NOT SHOWN, SEE STRUCTURAL)
10. CONCRETE MASONRY
11. UTILITY SINK (SEE PLUMBING)
12. GYP. BD. WALL
13. FIRE EXSTINGUISHER & CABINET
14. PREFINISHED STEEL ENTRY DOORS
15. GLASS BLOCK MASONRY ABI#4 SEE NOTE #1
16. STEEL DECK (SEE STRUCT.)
17. WATER COOLERS (SEE PLUMB.)
18. CORRIDOR BEYOND
19. SHOWER CONTROL
20. SCHEDULED BASE
21. GYP. BD WALL BEYOND
22. H.M. WINDOWS (PAINTED)
23. SCHEDULED GLAZING
24. 4"x4" CERAMIC TILE
25. H.C. SHOWER
26. H.C. SHOWER SEAT
27. H.C. GRAB BARS
28. METAL FRAMED, TEMPERED GLASS SHOWER DOOR
29. CERAMIC SOAP HOLDER
30. H.C. SHOWERHEAD
31. 2"x2" CERAMIC TILE BASE

GENERAL NOTES:

1. GLASS BLOCK MASONRY TO BE ELIMINATED UNLESS ABI #4 IS SELECTED. IF ABI #4 IS NOT SELECTED AS PART OF THIS WORK, WHERE GLASS BLOCK IS SHOWN ON THE DRAWING, THE BASE BID IS TO INCLUDE 8" CONCRETE MASONRY UNITS WITH HORIZONTAL BOND BEAMS @32" o.c.; TO CREATE A COMPLETE WALL SEPARATION AS DEPICTED ON THE DRAWINGS, INCLUDING APPROPRIATE DOOR JAMB DETAILING.

AIR NATIONAL GUARD CIVIL ENGINEERING

UTAH AIR NATIONAL GUARD BASE

785 NORTH 2200 WEST
SALT LAKE CITY, UTAH
84116-2999

INTERIOR ELEVATIONS

ELECTRONIC SECURITY SQUADRON FACILITY – UTAH AIR NATIONAL GUARD
PROJ. NO. USEB 939661

FFKR Architects Planners II
132 Pierpont Ave. Suite 200
Salt Lake City, Utah 84101
Telephone 801 521-6186

DATE: APRIL 1, 1996
REVISED:
DRAWN BY: E. LOFGRAN

DRAWING NO: A6.2

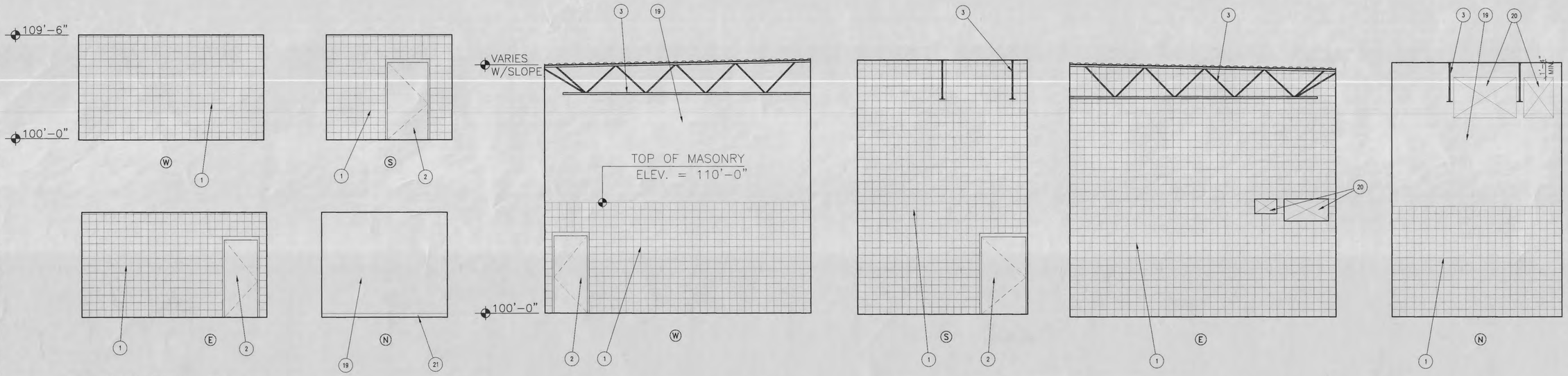

ELECTRICAL RM. 114

3 / A6.3

SCALE: 1/4" = 1'-0"

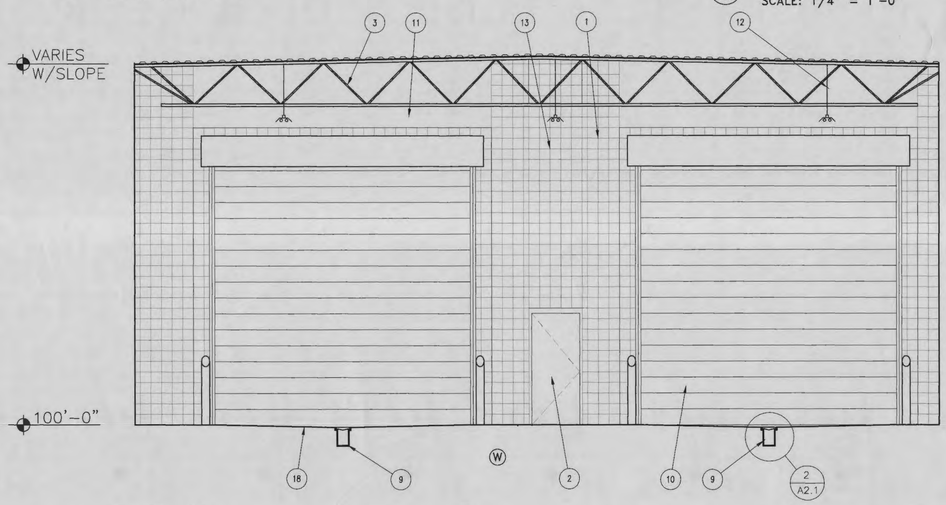

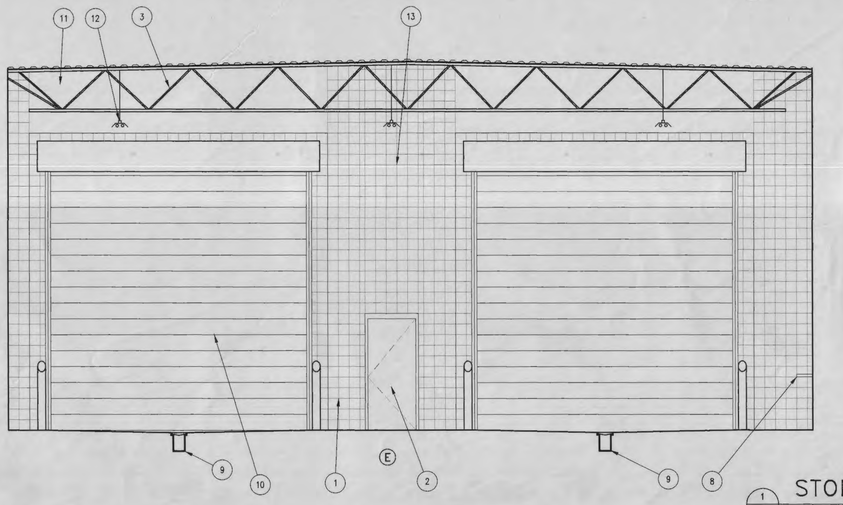

MECHANICAL ROOM 113

2 / A6.3

SCALE: 1/4" = 1'-0"

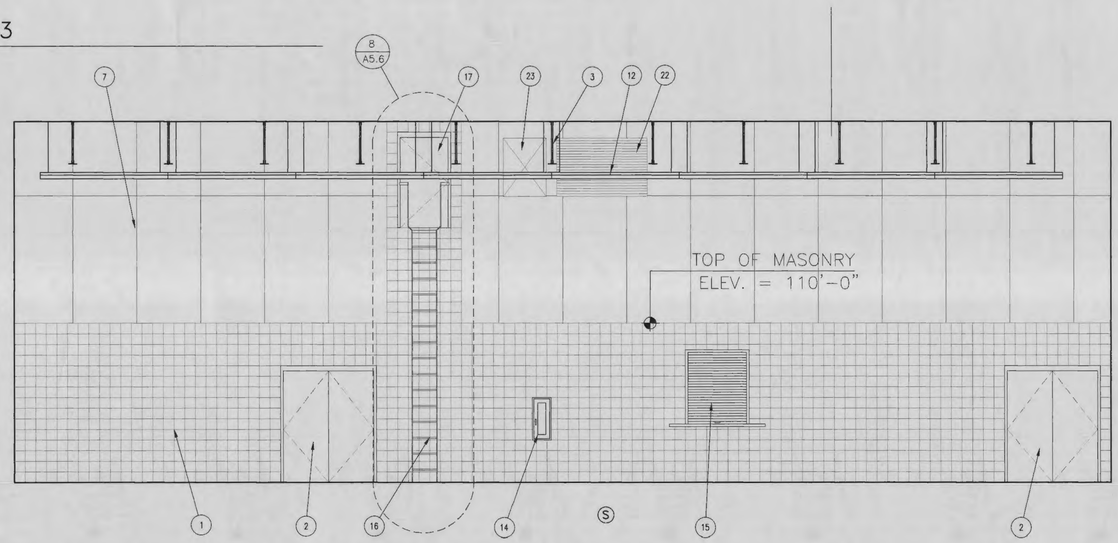

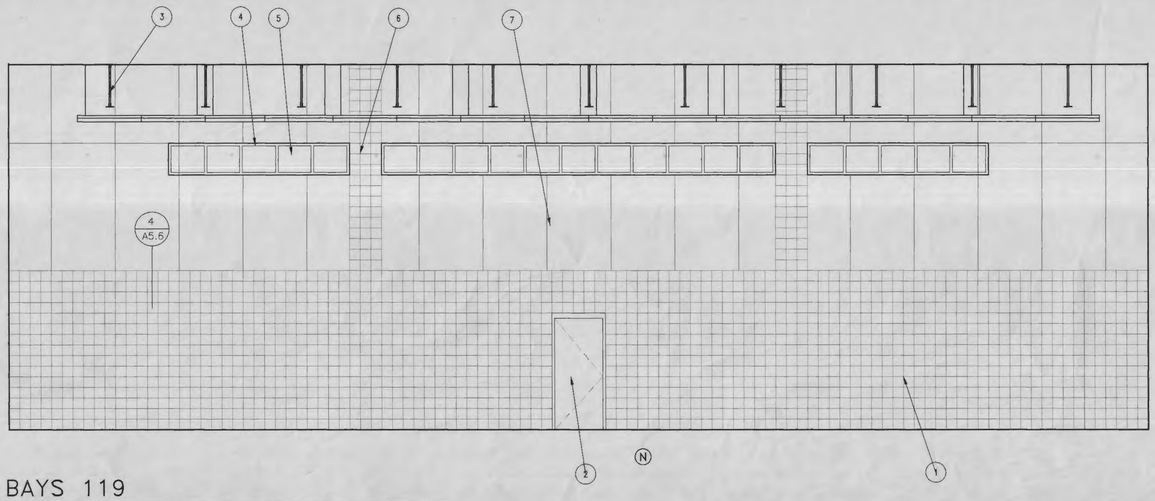

STORAGE BAYS 119

1 / A6.3

SCALE: 1/4" = 1'-0"

REFERENCE NOTES

1. CONCRETE MASONRY
2. SCHEDULED DOOR & FRAME
3. STEEL JOISTS (BRACING NOT SHOWN, SEE STRUCT.)
4. SCHEDULED WINDOWS (PAINTED)
5. SCHEDULED GLAZING
6. CONCRETE MASONRY COLUMN
7. 4' X 8' ACOUSTIC PANELS
8. PLASTIC LAMINATE COUNTER TOP
9. TRENCH DRAIN
10. 16' X 16' INSULATED OVERHEAD COILING DOORS
11. GYP. BD. INFILL WALL
12. LIGHT FIXTURE (SEE ELEC.)
13. CONCRETE MASONRY INFILL OVER DOOR
14. FIRE EXSTINGUISHER & CABINET
15. COILING COUNTER DOOR
16. ROOF ACCESS LADDER (PAINTED)
17. ROOF ACCESS DOOR, SEE SCHED.
18. SLOPE TO DRAIN
19. GYP. BD. WALL
20. OPENINGS THRU WALL FOR MECHANICAL DUCTWORK (VERIFY ACTUAL LOCATIONS)
21. SCHEDULED BASE
22. RETURN AIR GRILL (SEE MECH.)
23. SUPPLY AIR OPENING (SEE MECH.)

AIR NATIONAL GUARD CIVIL ENGINEERING

UTAH AIR NATIONAL GUARD BASE

785 NORTH 2200 WEST
SALT LAKE CITY, UTAH
84116-2999

INTERIOR ELEVATIONS

ELECTRONIC SECURITY SQUADRON FACILITY – UTAH AIR NATIONAL GUARD
PROJ. NO. USEB 939661

FFKR Architects Planners
132 Pierpont Ave. Suite 200
Salt Lake City, Utah 84101
Telephone 801 521-6186

DATE: APRIL 1, 1996
REVISED:
DRAWN BY: E. LOFGRAN

DRAWING NO: A6.3

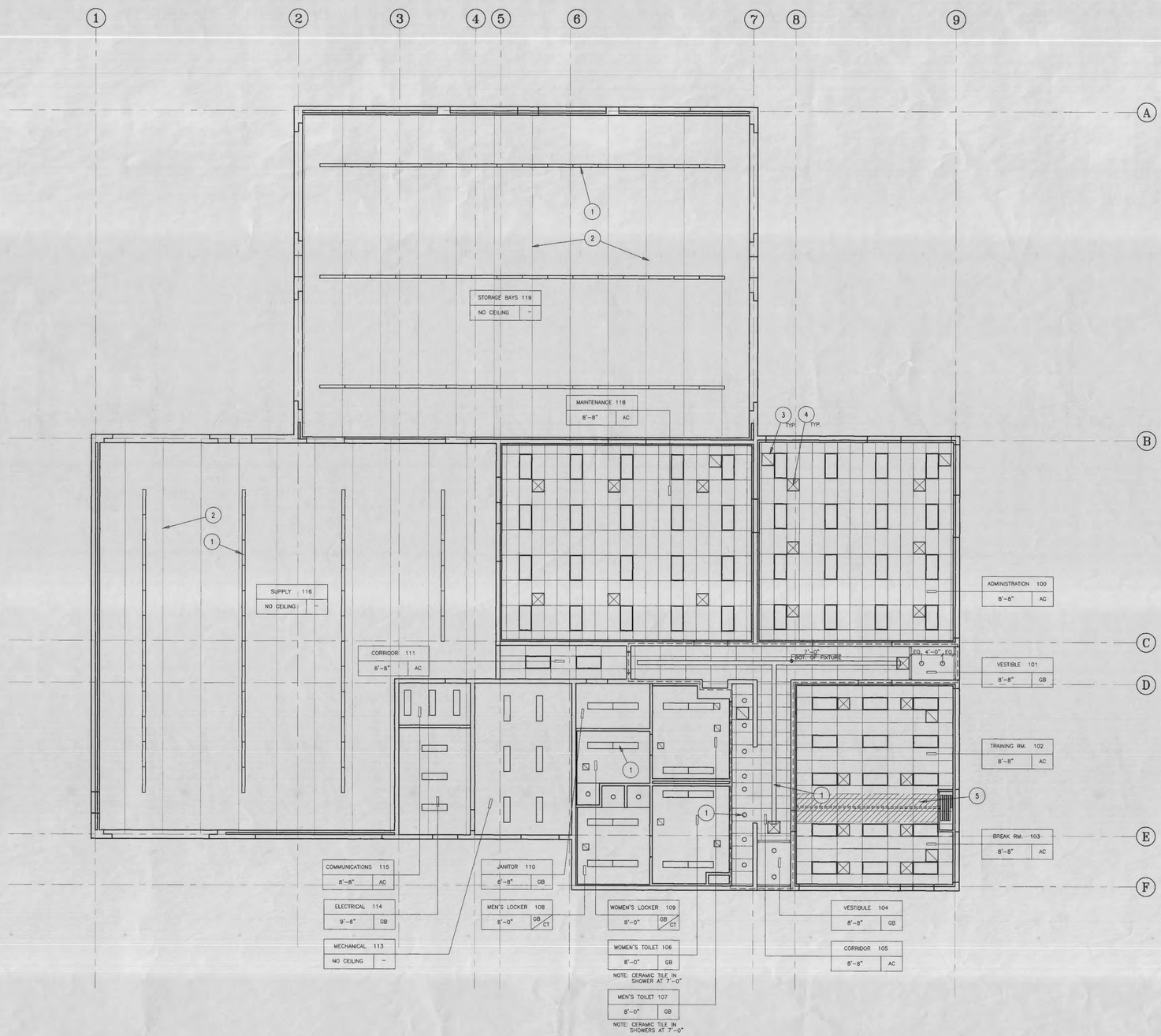

1/A7.1 REFLECTED CEILING PLAN

SCALE: 1/8" = 1'-0"

N

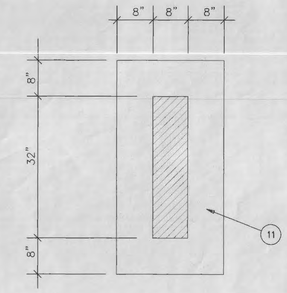

NOTE: ALL CEILING PENETRATIONS OR SURFACE MOUNTED FIXTURES SHALL BE LOCATED WITHIN THE SHADED AREA SHOWN.

CEILING PENETRATION DET. SCALE: NTS — 5/A7.1

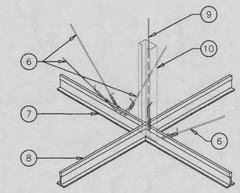

SEISMIC BRACING DETAIL SCALE: NTS — 4/A7.1

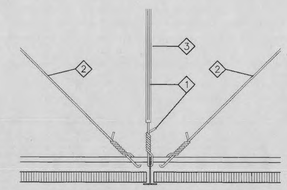

1. HANGING OF MAIN RUNNERS AT 4'-0" O.C. EACH WAY WITH #12 GAUGE SUSPENSION WIRES TIED TO THE JOIST OR STRUCTURE ABOVE.
2. LATERAL SUPPORT SHALL BE PROVIDED BY (4) WIRES OF MIN. #12 GAUGE SPLAYED IN (4) DIRECTIONS 90 DEGREES APART AND CONNECTED TO THE STRUCTURE ABOVE AT AN ANGLE NOT EXCEEDING 45 DEGREES FROM THE PLANE OF CEILING. THESE LATERAL SUPPORT WIRES SHALL BE LOCATED 6" TO 12" IN EACH DIRECTION WITH THE FIRST POINT WITHIN 4'-0" FROM EACH WALL AND SOFFIT.
3. PROVIDE 1/2" DIAMETER CONDUIT AROUND VERTICAL WIRE AT 12'-0" O.C. AT VERTICAL SEISMIC BRACING.
4. LIGHT FIXTURES AND AIR DIFFUSERS SHALL BE SUPPORTED DIRECTLY BY WIRES TO STRUCTURE ABOVE.
5. THIS DETAIL IS TYPICAL AND SHALL BE USED FOR ALL SUSPENDED CEILING TYPES; FOR CEILING TYPES REFER TO REFLECTED CEILING PLAN.

NOTE: AREAS SMALLER THAN 144 SQ. FT. & WITH WALLS ON FOUR SIDES EXTENDING TO STRUCTURE NEED NOT BE BRACED. BOUNDARY WALLS MUST BE BRACED BOTH TOP & BOTTOM INDEPENDANT OF CEILINGS.

SUSPENDED CEILING DET. SCALE: NTS — 3/A7.1

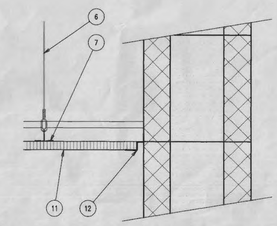

SUSPENDED CEILING DET. SCALE: NTS — 2/A7.1

REFERENCE NOTES

1. SCHEDULED LIGHTING FIXTURE (SEE ELECTRICAL)
2. EXPOSED STEEL JOIST (SEE STRUCT.)
3. MECHANICAL RETURN (SEE MECH.)
4. MECHANICAL SUPPLY (SEE MECH.)
5. ACOUSTIC BATTS TO 3'-0" EACH SIDE OF PARTITION
6. 12 GA. SPLAY WIRES
7. MAIN RUNNER TEE
8. CROSS RUNNER TEE
9. 12 GA. HANGER WIRE 48" O.C.
10. 1 5/8" METAL STUD @ 16" O.C. ATTACHED TO STRUCTURE ABOVE
11. ACOUSTIC PANEL CEILING
12. METAL REVEAL EDGE
13. BRACE DOORS TO MASONRY STUDS

FINISH CIELING SCHEDULE LEGEND

ROOM NAME/NUMBER	
HEIGHT ABOVE FINISHED FLR.	CIEL'G TYPE

CEILING TYPE

GB – GYPSUM BOARD (PAINTED)
AC – ACOUSTIC PANEL (LAY–IN TYPE) (2' X 4' TYPICAL)
CT – CERAMIC TILE

1–HR RATED WALL – – – – – – – –

AIR NATIONAL GUARD CIVIL ENGINEERING

UTAH AIR NATIONAL GUARD BASE

785 NORTH 2200 WEST
SALT LAKE CITY, UTAH
84116-2999

REFLECTED CEILING PL.

ELECTRONIC SECURITY SQUADRON FACILITY – UTAH AIR NATIONAL GUARD
PROJ. NO. USEB 939661

FFKR Architects Planners II
132 Pierpont Ave. Suite 200
Salt Lake City, Utah 84101
Telephone 801 521-6186

DATE: APRIL 1, 1996
REVISED:
DRAWN BY: E. LOFGRAN

DRAWING NO: A7.1

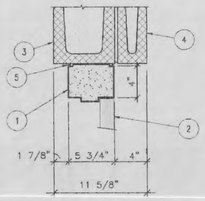

HEAD DETAIL | SCALE 1 1/2" = 1'-0" | 9 A8.1

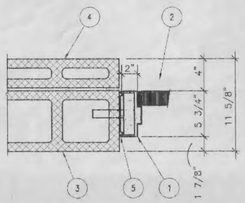

JAMB DETAIL | SCALE 1 1/2" = 1'-0" | 10 A8.1

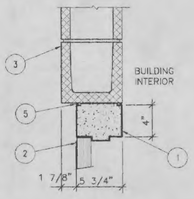

HEAD DETAIL | SCALE 1 1/2" = 1'-0" | 11 A8.1

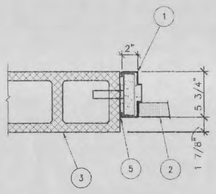

JAMB DETAIL | SCALE 1 1/2" = 1'-0" | 12 A8.1

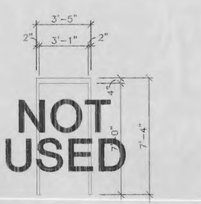

A

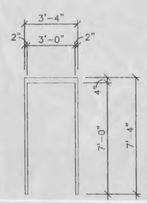

B

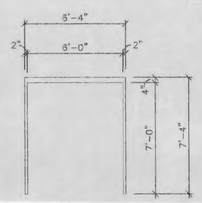

C

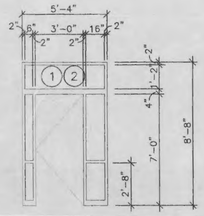

D (PREFINISHED STEEL)

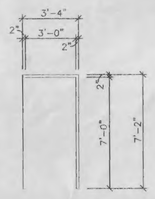

E

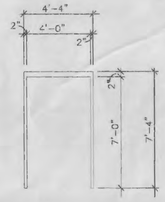

F

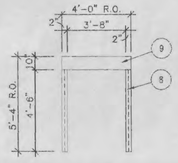

G (BY DOOR MANUFACTURER)

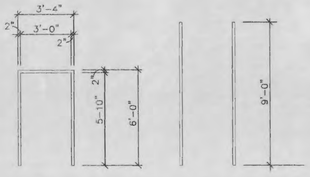

H

J JAMBS ONLY

FRAME TYPES
HOLLOW METAL FRAME TYP. U.N.O.
SCALE: 1/4"=1'-0"

WOOD
A

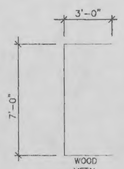

WOOD METAL
B

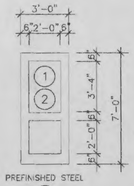

PREFINISHED STEEL
C

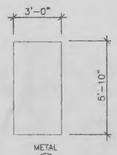

METAL
D

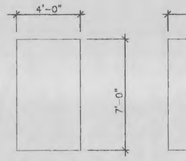

METAL
E

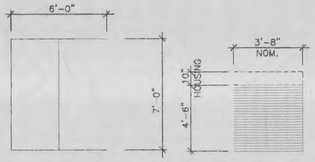

METAL
F

METAL
G

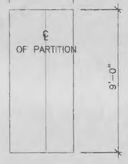

WOOD
H

DOOR TYPES
SCALE: 1/4"=1'-0"

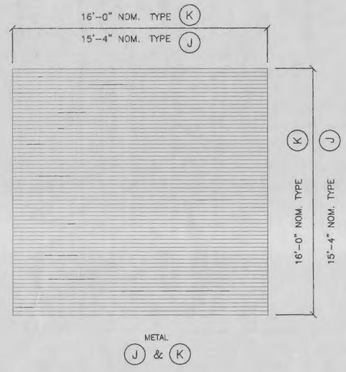

METAL
J & K

DOOR SCHEDULE

OPENING NUMBER	ROOM NAME	FIRE RATING	FRAME TYPE	DOOR TYPE	DOOR: ALUMINUM	DOOR: METAL	DOOR: WOOD	DOOR: THICKNESS	DOOR: HEIGHT	DOOR: WIDTH	DETAILS: JAMB	DETAILS: HEAD	DETAILS: THRESHOLD	HARDWARE GROUP	REMARKS	OPENING NUMBER
								FIRST FLOOR								
100	ADMINISTRATION AREA 100	20 MIN.	B	B			X	1 3/4"	7'-0"	3'-0"	11/A8.2 12/A8.2	13/A8.2 14/A8.2	----	3	NOTE GLASS BLOCK	100
101A	VESTIBULE 101	NR	D	C		X		2"	7'-0"	3'-0"	25/A8.2	1/A8.2	3/A2.2	1	EXTERIOR	101A
101B	VESTIBULE 101	NR	D	C		X		2"	7'-0"	3'-0"	5/A8.2	4/A8.2	4/A2.2	2	INTERIOR	101B
102A	TRAINING ROOM 102	20 MIN.	B	B			X	1 3/4"	7'-0"	3'-0"	11/A8.2 12/A8.2	13/A8.2 14/A8.2	----	3	DETAILS SIMILAR	102A
102B	TRAINING ROOM 102	–	J	H			X	3"	9'-0"	VERIFY	5/A8.1	5/A8.1	----	–	FOLDING PARTITION (SEE A5.6)	102B
103A	BREAK ROOM 103	20 MIN.	B	B			X	1 3/4"	7'-0"	3'-0"	23/A8.2	24/A8.2	----	3		103A
103B	BREAK ROOM 103	NR	B	B		X		1 3/4"	7'-0"	3'-0"	3/A8.2	2/A8.2	5/A2.2	13	INSULATED	103B
104A	VESTIBULE 104	NR	D	C		X		2"	7'-0"	3'-0"	25/A8.2	1/A8.2	3/A2.2	1	EXTERIOR	104A
104B	VESTIBULE 104	NR	D	C		X		2"	7'-0"	3'-0"	5/A8.2	4/A8.2	4/A2.2	2	INTERIOR	104B
105A	NOT USED															105A
105B	NOT USED															105B
106	WOMENS TOILET 106	20 MIN.	E	B			X	1 3/4"	7'-0"	3'-0"	4/A8.1	5/A8.1	7/A2.2	4		106
107	MENS TOILET 107	20 MIN.	E	B			X	1 3/4"	7'-0"	3'-0"	4/A8.1	5/A8.1	7/A2.2	4		107
108	MEN'S SHOWER/LOCKER 108	NR	E	B			X	1 3/4"	7'-0"	3'-0"	4/A8.1	5/A8.1	----	5	DOOR GRILLE REQ'D COORDINATE WITH MECH.	108
109	WOMEN'S SHOWER/LOCKER 109	NR	E	B			X	1 3/4"	7'-0"	3'-0"	4/A8.1	5/A8.1	----	5	DOOR GRILLE REQ'D COORDINATE WITH MECH.	109
110	JANITOR	NR	B	B		X		1 3/4"	7'-0"	3'-0"	12/A8.1	11/A8.1	----	6		110
111	CORRIDOR 111	20 MIN.	B	B			X	1 3/4"	7'-0"	3'-0"	12/A8.1	11/A8.1	8/A2.2	10		111
112	NOT USED															112
113	MECHANICAL ROOM 113	NR	F	E		X		1 3/4"	7'-0"	4'-0"	21/A8.2	22/A8.2	----	12	INSULATED	113
114A	ELECTRICAL ROOM 114	NR	F	E		X		1 3/4"	7'-0"	4'-0"	21/A8.2	22/A8.2	----	12	INSULATED	114A
114B	ELECTRICAL ROOM 114	NR	B	B		X		1 3/4"	7'-0"	3'-0"	1/A8.1	8/A8.2	----	6		114B
115	COMMUNICATIONS	NR	B	B		X		1 3/4"	7'-0"	3'-0"	12/A8.1	11/A8.1	----	6		115
116A	SUPPLY AREA 116	NR	–	J		X		–	15'-4"	15'-4"	7/A8.1	13/A8.1	----	–	ELECTRICAL COILING DOOR (OVERHEAD)	116A
116B	SUPPLY AREA 116	NR	B	B		X		1 3/4"	7'-0"	3'-0"	1/A8.1	8/A8.2	6/A2.2	7		116B
116C	SUPPLY AREA 116	NR	–	J		X		–	15'-4"	15'-4"	7/A8.1	13/A8.1	----	–	ELECTRICAL COILING DOOR (OVERHEAD)	116C
116D	SUPPLY AREA 116	NR	B	B		X		1 3/4"	7'-0"	3'-0"	7/A8.2	8/A8.2	6/A2.2	7		116D
116E	SUPPLY AREA 116	NR	C	F		X		1 3/4"	7'-0"	3'-0"PR	10/A8.1	9/A8.1	----	11	SOUND SEAL	116E
117A	DISTRIBUTION 117	NR	G	G		X		–	4'-6"	3'-8"	6/A5.1	8/A8.1	----	–	MANUAL ROLL-UP COUNTER DOOR R.O. 4' X 5'-4"	117A
117B	DISTRIBUTION 117	NR	G	G		X		–	4'-6"	3'-8"	2/A8.1	3/A8.1	----	–	MANUAL ROLL-UP COUNTER DOOR R.O. 4' X 5'-4"	117B
118A	MAINTENANCE 118	NR	C	F		X		1 3/4"	7'-0"	3'-0"PR	15/A8.2	20/A8.2	----	11	SOUND SEAL	118A
118B	MAINTENANCE 118	NR	B	B			X	1 3/4"	7'-0"	3'-0"	16/A8.2 17/A8.2	18/A8.2 19/A8.2	----	3	NOTE GLASS BLOCK	118B
118C	MAINTENANCE 118	20 MIN.	B	B			X	1 3/4"	7'-0"	3'-0"	11/A8.2 12/A8.2	13/A8.2 14/A8.2	9/A2.2	3	NOTE GLASS BLOCK	118C
118D	MAINTENANCE 118	NR	C	F		X		1 3/4"	7'-0"	3'-0"PR	23/A8.2	24/A8.2	10/A2.2	11		118D
119A	STORAGE BAY 119	NR	–	K		X		–	16'-0"	16'-0"	7/A8.2	13/A8.2	----	–	ELECTRIC INSULATED COILING OVERHEAD DOOR	119A
119B	STORAGE BAY 119	NR	B	B		X		1 3/4"	7'-0"	3'-0"	1/A8.1	8/A8.2	6/A2.2	8	INSULATED	119B
119C	STORAGE BAY 119	NR	–	K		X		–	16'-0"	16'-0"	7/A8.2	13/A8.2	----	–	ELECTRIC INSULATED COILING OVERHEAD DOOR	119C
119D	STORAGE BAY 119	NR	B	B		X		1 3/4"	7'-0"	3'-0"	1/A8.1	8/A8.2	6/A2.2	8	INSULATED	119D
119E	STORAGE BAY 119	NR	–	K		X		–	16'-0"	16'-0"	7/A8.2	13/A8.2	----	–	ELECTRIC INSULATED COILING OVERHEAD DOOR	119E
119F	STORAGE BAY 119	NR	B	B		X		1 3/4"	7'-0"	3'-0"	1/A8.1	8/A8.2	6/A2.2	3	INSULATED	119F
119G	STORAGE BAY 119	NR	–	K		X		–	16'-0"	16'-0"	7/A8.2	13/A8.2	----	–	ELECTRIC INSULATED COILING OVERHEAD DOOR	119G
119H	STORAGE BAY 119	NR	–	D		X		1 3/4"	5'-10"	3'-0"	15/A8.2	11/A8.2	6/A2.2	13	INSULATED	119H

REFERENCE NOTES

1. HOLLOW METAL FRAME, PAINTED GROUT SOLID AT MASONRY WALLS
2. SCHEDULED DOOR
3. 8" C.M.U.
4. 4" C.M.U.
5. SEALANT (TYP. BOTH SIDES)
6. 2" RIGGID INSULATION
7. ROLL UP DOOR (PAINTED)
8. ROLL UP DOOR GUIDE (PAINTED)
9. ROLL UP DOOR HOOD (PAINTED)
10. WALL BEYOND
11. 5/8" GYP. BD. ON 7 1/4" STEEL STUDS @ 16" O.C.
12. CERAMIC TILE
13. ADHESIVE – ANSI A136.1
14. WATER RESISTANT GYPSUM BOARD ASTM C630
15. OVERHEAD COILING DOOR (INSULATED)
16. OVERHEAD COILING DOOR GUIDE
17. OVERHEAD COILING DOOR HOOD
18. GLASS BLOCK
19. SCHEDULED GLAZING
20. THRESHOLD
21. CEILING – SEE A7.1 (REF. CLG. PLAN)
22. 6" METAL STUDS
23. 5/8" GYP. BD. ON 3 5/8" METAL STUDS @ 16" O.C.
24. BATT INSULATION
25. CORNER BEAD
26. 5/8" GYP. BD. ON 2 1/2" METAL STUDS @ 16" O.C.
27. 5/8" GYP. BD. ON 2" METAL "Z" CLIPS @ 24" O.C.
28. FRAMING AS REQD. TO SUPPORT GLASS BLOCK & DOOR FRAME
29. J-SHAPED RETURN

1. ACCESS DOORS AND PANELS SHOWN ON DRAWINGS AND SCHEDULE ARE KNOWN LOCATIONS AND DO NOT LIMIT THE NUMBER OF ACCESS DOORS OR PANELS REQUIRED. COORDINATE WITH ELECTRICAL, SOUND, PLUMBING, HVAC, AND OTHER TRADES AS TO REQUIREMENTS (CODE AND MAINTENANCE) FOR ADDITIONAL ACCESS DOORS AND PANELS.

GLAZING TYPES

1. 1/4" FLOAT, TINTED
2. 1" INSULATED, TINTED
3.

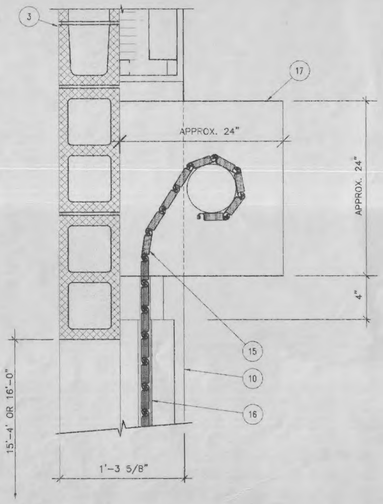

OVERHEAD DOOR/HEAD | SCALE 1 1/2" = 1'-0" | 13 A8.1

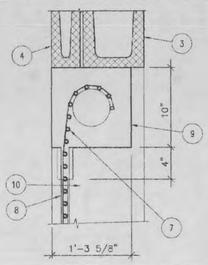

HEAD DETAIL | SCALE HALF FULL SCALE | 8 A8.1

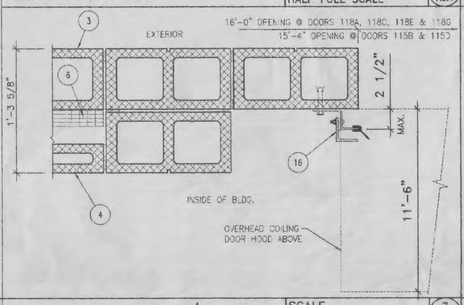

OVERHEAD DOOR/JAMB | SCALE 1 1/2" = 1'-0" | 7 A8.1

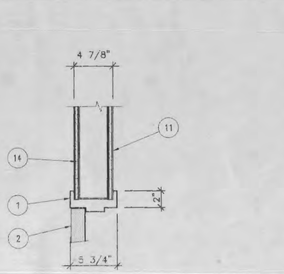

HEAD/JAMB DETAIL | SCALE 1 1/2" = 1'-0" | 5 A8.1

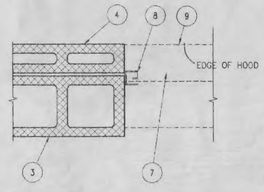

JAMB DETAIL | SCALE 1 1/2" = 1'-0" | 6 A8.1

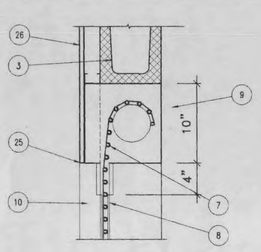

HEAD DETAIL | SCALE 1 1/2" = 1'-0" | 3 A8.1

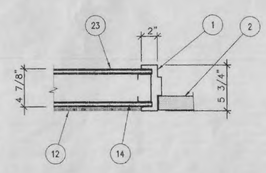

JAMB DETAIL | SCALE 1 1/2" = 1'-0" | 4 A8.1

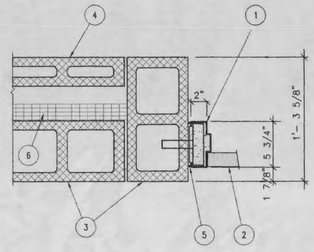

DOOR JAMB | HORIZONTAL SCALE: 1 1/2" = 1'-0" | 1 A8.1

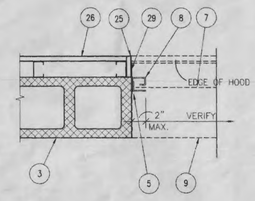

COILING COUNTER DOOR | SCALE 1 1/2" = 1'-0" | 2 A8.1

AIR NATIONAL GUARD CIVIL ENGINEERING

UTAH AIR NATIONAL GUARD BASE

785 NORTH 2200 WEST
SALT LAKE CITY, UTAH
84116-2999

DOOR SCHEDULE & DETAILS

ELECTRONIC SECURITY SQUADRON FACILITY – UTAH AIR NATIONAL GUARD
PROJ. NO. USEB 939661

FFKR Architects Planners II
132 Pierpont Ave. Suite 200
Salt Lake City, Utah 84101
Telephone 801 521-6186

DATE: APRIL 1, 1996
REVISED:

DRAWING NO: A8.1

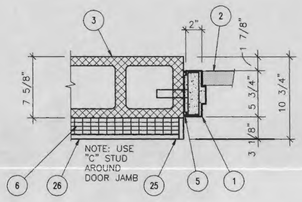

JAMB DETAIL | SCALE 1 1/2" = 1'-0" | 21 A8.2

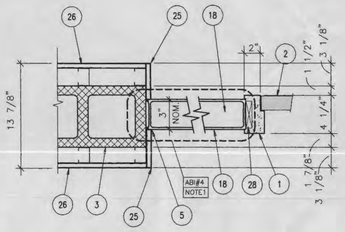

JAMB DETAIL | SCALE 1 1/2" = 1'-0" | 16 A8.2

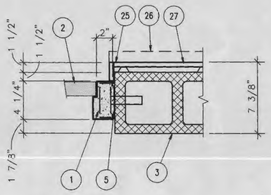

JAMB DETAIL | SCALE 1 1/2" = 1'-0" | 11 A8.2

NOT USED

THRESHOLD DETAIL | SCALE 1 1/2" = 1'-0" | 6 A8.2

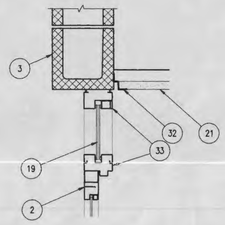

HEAD DETAIL/ENTRY | SCALE 1 1/2" = 1'-0" | 1 A8.2

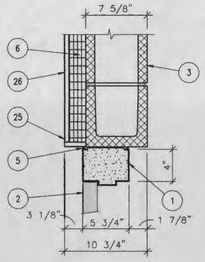

HEAD DETAIL | SCALE 1 1/2" = 1'-0" | 22 A8.2

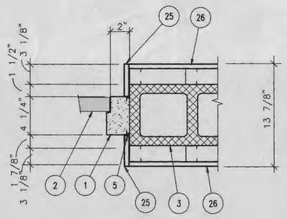

JAMB DETAIL | SCALE 1 1/2" = 1'-0" | 17 A8.2

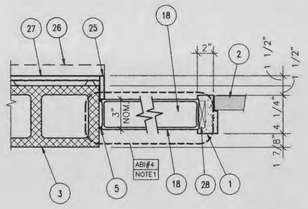

JAMB DETAIL | SCALE 1 1/2" = 1'-0" | 12 A8.2

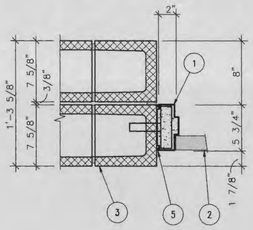

JAMB DETAIL | SCALE 1 1/2" = 1'-0" | 7 A8.2

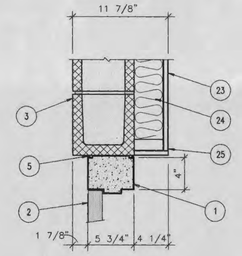

HEAD DETAIL | SCALE 1 1/2" = 1'-0" | 2 A8.2

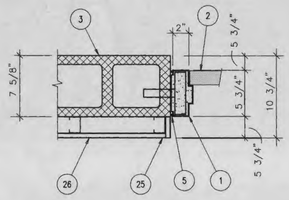

JAMB DETAIL | SCALE 1 1/2" = 1'-0" | 23 A8.2

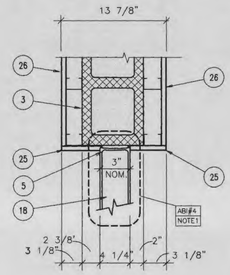

HEAD DETAIL/GLASS BLK. | SCALE 1 1/2"=1'-0" | 18 A8.2

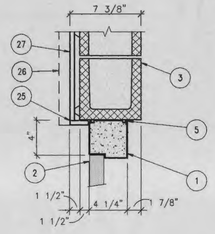

JAMB DETAIL | SCALE 1 1/2" = 1'-0" | 13 A8.2

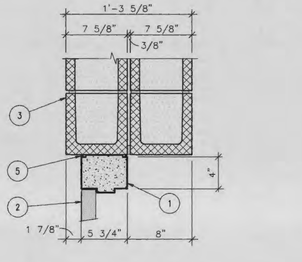

HEAD DETAIL | SCALE 1 1/2" = 1'-0" | 8 A8.2

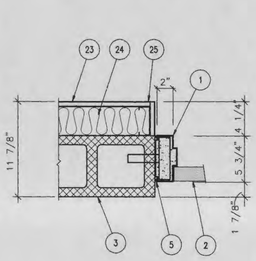

JAMB DETAIL | SCALE 1 1/2" = 1'-0" | 3 A8.2

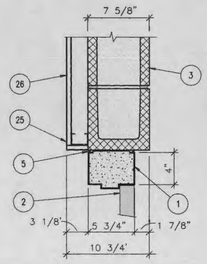

HEAD DETAIL | SCALE 1 1/2" = 1'-0" | 24 A8.2

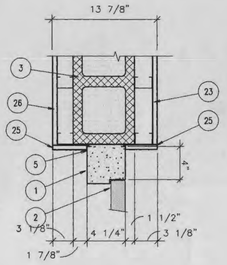

HEAD DETAIL | SCALE 1 1/2" = 1'-0" | 19 A8.2

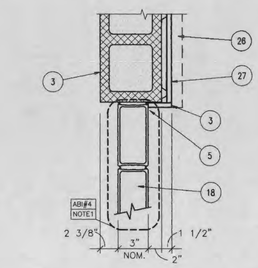

HEAD DETAIL/GLASS BLK. | SCALE 1 1/2" = 1'-0" | 14 A8.2

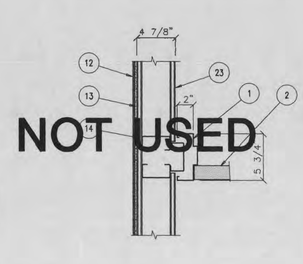

JAMB DETAIL | SCALE 1 1/2" = 1'-0" | 9 A8.2

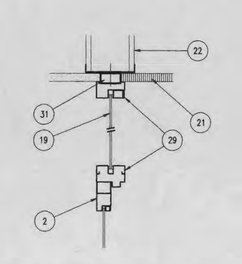

HEAD DETAIL/ENTRY | SCALE 1 1/2" = 1'-0" | 4 A8.2

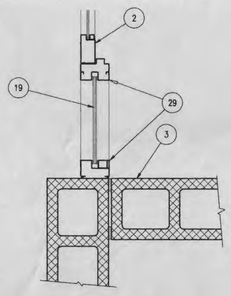

ENTRY DOOR/JAMB | SCALE 1 1/2" = 1'-0" | 25 A8.2

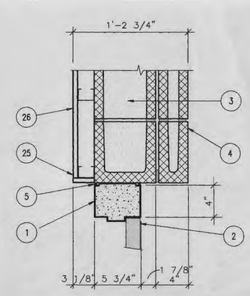

HEAD DETAIL | SCALE 1 1/2" = 1'-0" | 20 A8.2

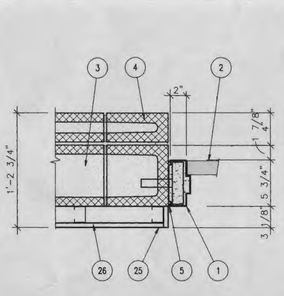

JAMB DETAIL | SCALE 1 1/2" = 1'-0" | 15 A8.2

NOT USED

DOOR JAMB | VERTICAL SCALE: 1 1/2" = 1'-0" | 10 A8.2

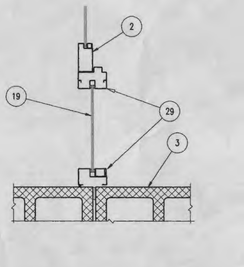

JAMB DETAIL/ ENTRY | SCALE 1 1/2" = 1'-0" | 5 A8.2

REFERENCE NOTES

1. HOLLOW METAL FRAME, PAINTED GROUT SOLID
2. SCHEDULED DOOR
3. 8" C.M.U.
4. 4" C.M.U.
5. SEALANT
6. 2" RIGID INSULATION
7. ROLL UP DOOR
8. ROLL UP DOOR GUIDE
9. ROLL UP DOOR HOOD
10. WALL BEYOND
11. 5/8" GYP. BD. ON 6" STEEL STUDS @ 16" O.C.
12. CERAMIC TILE
13. ADHESIVE – ANSI A136.1
14. WATER RESISTANT GYPSUM BOARD ASTM C630
15. OVERHEAD COILING DOOR (INSULATED)
16. OVERHEAD COILING DOOR GUIDE
17. OVERHEAD COILING DOOR HOOD
18. GLASS BLOCK–ABI#4 SEE NOTE #1
19. SCHEDULED GLAZING
20. THRESHOLD
21. CEILING – SEE A7.1 (REF. CLG. PLAN)
22. 6" METAL STUDS
23. 5/8" GYP. BD. ON 3 5/8" METAL STUDS @ 16" O.C.
24. BATT INSULATION
25. CORNER BEAD
26. 5/8" GYP. BD. ON 2 1/2" METAL STUDS @ 16" O.C. (WHERE INDICATED ON PLAN)
27. 5/8" GYP. BD. ON 7/8" HAT CHANNEL @ 24" O.C.
28. FRAMING AS REQD. TO SUPPORT GLASS BLOCK(ABI#4) & DOOR FRAME
29. PREFINISHED STEEL ENTRY DOOR & FRAME
30. METAL REVEAL EDGE BEAD
31. TUBE STEEL, FASTEN TO WALL THRU WELDED END PLATES CONCEALED ABOVE CEILING
32. CEILING CORNER TRIM
33. DOOR TRANSOM FRAME

GENERAL NOTES:

1. GLASS BLOCK MASONRY TO BE ELIMINATED UNLESS ABI #4 IS SELECTED. IF ABI #4 IS NOT SELECTED AS PART OF THIS WORK, WHERE GLASS BLOCK IS SHOWN ON THE DRAWING, THE BASE BID IS TO INCLUDE 8" CONCRETE MASONRY UNITS WITH HORIZONTAL BOND BEAMS @32" o.c.; TO CREATE A COMPLETE WALL SEPARATION AS DEPICTED ON THE DRAWINGS, INCLUDING APPROPRIATE DOOR JAMB DETAILING.

AIR NATIONAL GUARD CIVIL ENGINEERING

UTAH AIR NATIONAL GUARD BASE

785 NORTH 2200 WEST
SALT LAKE CITY, UTAH
84116-2999

DOOR DETAILS

ELECTRONIC SECURITY SQUADRON FACILITY – UTAH AIR NATIONAL GUARD
PROJ. NO. USEB 939661

FFKR Architects Planners II
132 Pierpont Ave. Suite 200
Salt Lake City, Utah 84101
Telephone 801 521-6186

DATE: APRIL 1, 1996
REVISED:
DRAWN BY: E. LOFGRAN

DRAWING NO: A8.2

NOT USED

VERTICAL SCALE: 1 1/2" = 1'-0" (X A8.3)

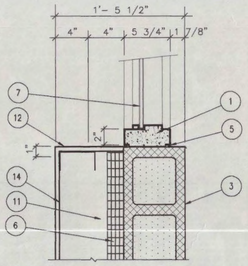

SILL DETAIL

SCALE 1 1/2" = 1'-0" (6 A8.3)

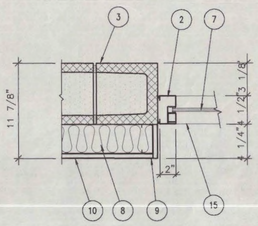

JAMB/HEAD DETAIL

SCALE 1 1/2" = 1'-0" (1 A8.3)

NOT USED

VERTICAL SCALE: 1 1/2" = 1'-0" (X A8.3)

NOT USED

VERTICAL SCALE: 1 1/2" = 1'-0" (X A8.3)

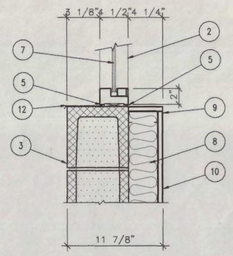

SILL DETAIL

SCALE 1 1/2" = 1'-0" (2 A8.3)

NOT USED

VERTICAL SCALE: 1 1/2" = 1'-0" (X A8.3)

NOT USED

VERTICAL SCALE: 1 1/2" = 1'-0" (X A8.3)

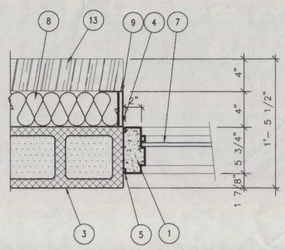

JAMB/HEAD DETAIL

SCALE 1 1/2" = 1'-0" (3 A8.3)

NOT USED

VERTICAL SCALE: 1 1/2" = 1'-0" (X A8.3)

NOT USED

VERTICAL SCALE: 1 1/2" = 1'-0" (X A8.3)

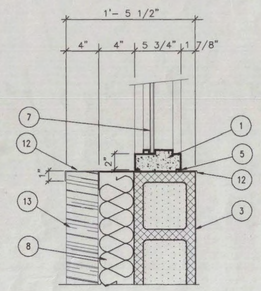

SILL DETAIL

SCALE 1 1/2" = 1'-0" (4 A8.3)

NOT USED

VERTICAL SCALE: 1 1/2" = 1'-0" (X A8.3)

NOT USED

VERTICAL SCALE: 1 1/2" = 1'-0" (X A8.3)

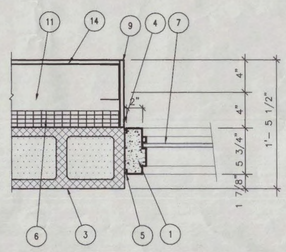

JAMB/HEAD DETAIL

SCALE 1 1/2" = 1'-0" (5 A8.3)

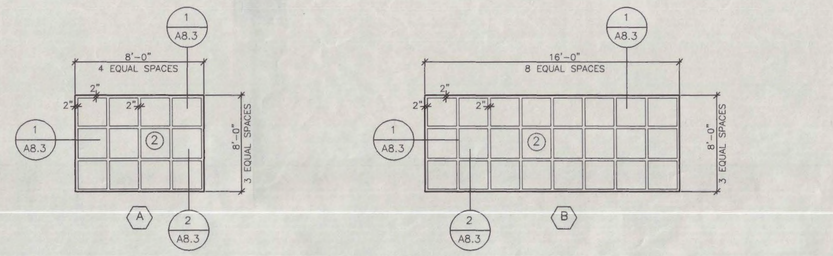

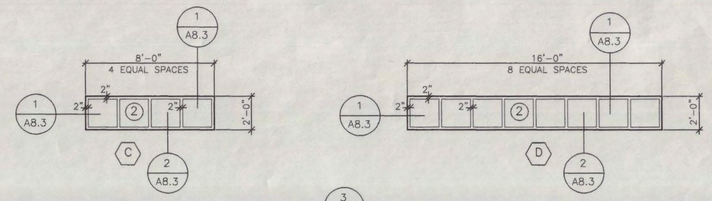

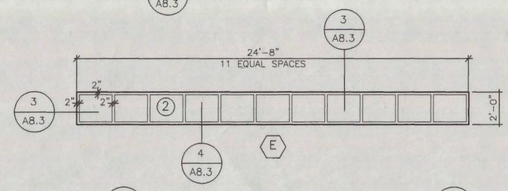

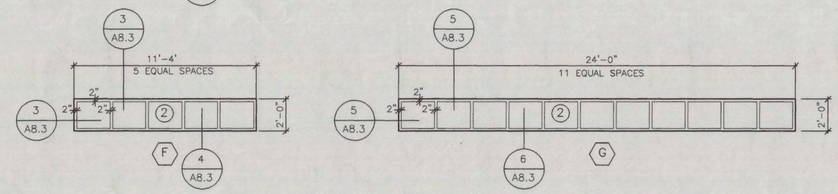

WINDOW TYPES HOLLOW METAL FRAME TYP. U.N.O.
SCALE: 1/4"=1'-0"

REFERENCE NOTES

1. HOLLOW METAL FRAME, PAINTED GROUT SOLID
2. PREFINISHED METAL ENTRY SYSTEM
3. 8" C.M.U.
4. J-SHAPED METAL TRIM
5. SEALANT
6. 2" RIGID INSULATION
7. SCHEDULED GLAZING
8. BATT INSULATION, R-11
9. CORNER BEAD
10. 5/8" GYP. BD. ON 3 5/8" METAL STUDS @ 16" O.C.
11. 4" METAL STUD FRAMING
12. SILL FLASHING (PAINTED)
13. 4" ACOUSTIC PANELS
14. 5/8" GYP. BD.
15. WINDOW FRAME

GENERAL NOTES

1. ALL FINISHES SHALL BE PAINTED UNLESS OTHERWISE NOTED.

GLAZING TYPES

1. 1/4" FLOAT, TINTED
2. 1" INSULATED, TINTED
3.

AIR NATIONAL GUARD CIVIL ENGINEERING

UTAH AIR NATIONAL GUARD BASE

785 NORTH 2200 WEST
SALT LAKE CITY, UTAH
84116-2999

WINDOW TYPES & DETAILS

ELECTRONIC SECURITY SQUADRON FACILITY – UTAH AIR NATIONAL GUARD
PROJ. NO. USEB 939661

FFKR Architects Planners II
132 Pierpont Ave. Suite 200
Salt Lake City, Utah 84101
Telephone 801 521-6186

DATE: APRIL 1, 1996
REVISED:
DRAWN BY: E. LOFGRAN

DRAWING NO: A8.3

NOT USED

SCALE 1 1/2" = 1'-0" (5 / A9.1)

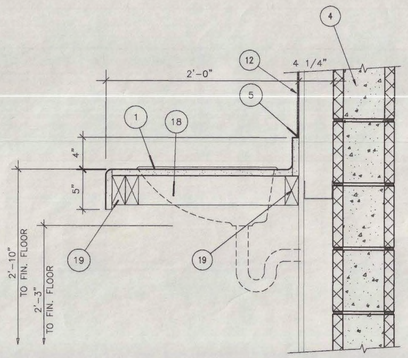

COUNTER DETAIL

SCALE 1 1/2" = 1'-0" (3 / A9.1)

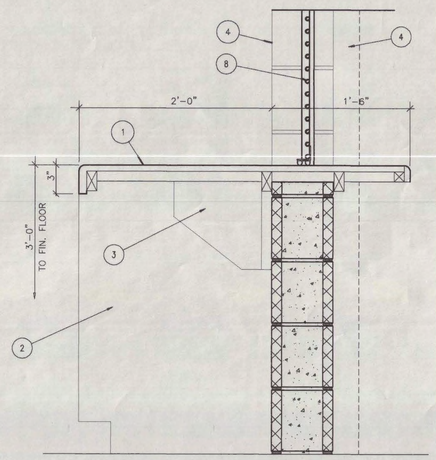

COUNTER SECTION

SCALE 1 1/2" = 1'-0" (1 / A9.1)

NOT USED

SCALE 1 1/2" = 1'-0" (6 / A9.1)

COUNTER SECTION

SCALE 1 1/2" = 1'-0" (4 / A9.1)

CABINET SECTION

SCALE 1 1/2" = 1'-0" (2 / A9.1)

REFERENCE NOTES

1 PLASTIC LAMINATE COUNTERTOP WITH CONTINUOUS BACKSPLASH AND EDGES
2 DRAWERS BEYOND
3 COUNTER SUPPORT AS REQUIRED
4 SCHEDULED WALL
5 SEALANT
6 PLASTIC LAMINATE FACE AND BACK
7 ROLL UP DOOR
8 ROLL UP DOOR GUIDE
9 FIXED MELAMINE SHELF
10 CABINET/CASEWORK WITH FUSED MELAMINE FACE
11 5/8" GYP. BD. ON 2 1/2" STEEL STUDS @ 16" O.C.
12 CERAMIC TILE
13 ADJUSTABLE FUSED MELAMINE SHELVING, BAND ALL EXPOSED VISIBLE EDGES
14 5/8" GYP. BD. ON 3 5/8" METAL STUDS AT @ 16" O.C.
16
17
18 SCHEDULED SINK (SEE PLUMB.)
19 WOOD BLOCKING
20 1/2" BLOCKING
21 BASE LEVELERS/ TOE KICK AS SHOWN
22 PLASTIC LAMINATE ON DRAWER FRONTS

AIR NATIONAL GUARD CIVIL ENGINEERING

UTAH AIR NATIONAL GUARD BASE

705 NORTH 2200 WEST
SALT LAKE CITY, UTAH
84116-2999

CASEWORK/DETAILS

ELECTRONIC SECURITY SQUADRON FACILITY – UTAH AIR NATIONAL GUARD
PROJ. NO. USEB 939661

FFKR Architects Planners II
132 Pierpont Ave. Suite 200
Salt Lake City, Utah 84101
Telephone 801 521-6186

DATE: APRIL 1, 1996
REVISED:
DRAWN BY: E. LOFGRAN
DRAWING NO: A9.1

02 A10.1 **SUPPLY AREA WORKSTATIONS FURNISHING PLAN**
SCALE: 3/8" = 1'-0"

01 A10.1 **ADMINISTRATION TRAINING FURNISHING PLAN**
SCALE: 3/8" = 1'-0"

SYSTEMS FURNITURE LEGEND

36	Powered Panel
36	Nonpowered Panel
E	Finished End
R C R C	Direct Connect, Right: Baseline, Beltline
A A	Receptacle, Duplex, Circuit A: Baseline, Beltline
B B	Receptacle, Duplex, Circuit B: Baseline, Beltline
C C	Receptacle, Duplex, Circuit C: Baseline, Beltline
FAKB	Keyboard Tray, Fully Adjustabele
U	Flipper Door Unit
L	Tasklight
BBF FF PBE PBF	Pedestal, Freestanding: 6,6,12; 12,12; 3,6,18; 3,6,12
P	Pencil Drawer
T	Tackboard
B	Tool Bar
S E !	Shelf: Standard, EDP, 7.5"
L C F C	Direct Connect, Left: Baseline, Beltline
SP	Support Panel

	A01*	A02I	A03	ETH0
48	27"	32"	31"	27"
48	34"	39"	40"	38"
48	42"	47"	--	--
48	48"	53"	54"	54"
48	62"	62"	63"	--
48	--	67"	68"	70"
48	80"	85"	80"	86"

* AsNew, Series 1; Phoenix, 3-Circuit
! A01, AsNew, Phoenix: With Base
! AsNew, Series 2; Phoenix, 4-Circuit

FOR REFERENCE ONLY
NOT FOR CONSTRUCTION

REFERENCE NOTES

GENERAL NOTES:
1. FOR REFERENCE ONLY. SYSTEMS FURNITURE TO BE BID UNDER SEPARATE CONTRACT
2. GLASS BLOCK MASONRY TO BE ELIMINATED UNLESS ABI #4 IS SELECTED. IF ABI #4 IS NOT SELECTED AS PART OF THIS WORK, WHERE GLASS BLOCK IS SHOWN ON THE DRAWING, THE BASE BID IS TO INCLUDE 8" CONCRETE MASONRY UNITS WITH HORIZONTAL BOND BEAMS @32" o.c.; TO CREATE A COMPLETE WALL SEPARATION AS DEPICTED ON THE DRAWINGS, INCLUDING APPROPRIATE DOOR JAMB DETAILING.

CMU WALL

UTAH AIR NATIONAL GUARD BASE
785 NORTH 2200 WEST
SALT LAKE CITY, UTAH
84116-2998

FURNISHING PLAN

ELECTRONIC SECURITY SQUADRON FACILITY – UTAH AIR NATIONAL GUARD
PROJ. NO. USEB 939661

FFKR Architects Planners II
132 Pierpont Ave. Suite 200
Salt Lake City, Utah 84101
Telephone 801 521-8186

DATE: APRIL 1, 1996
REVISED:
DRAWN BY: E. LOFGRAN
DRAWING NO: A10.1

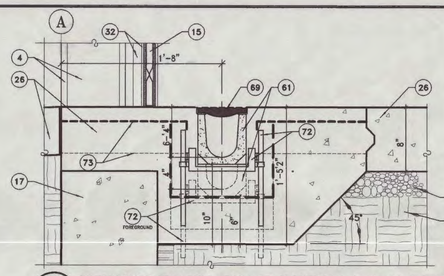

12 AA2.1 **TRENCH DRAIN CHAIR INSTALLATION DETAIL**
SCALE: 1 1/2" = 1'-0"

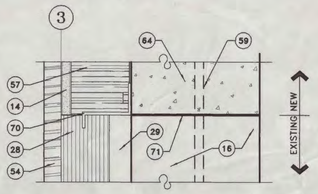

11 AA2.1 **WALL CONNECTION DETAIL**
SCALE: 3" = 1'-0"

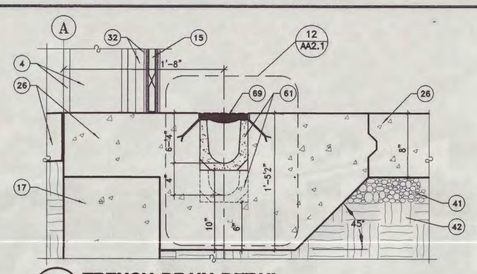

10 AA2.1 **TRENCH DRAIN DETAIL**
SCALE: 1 1/2" = 1'-0"

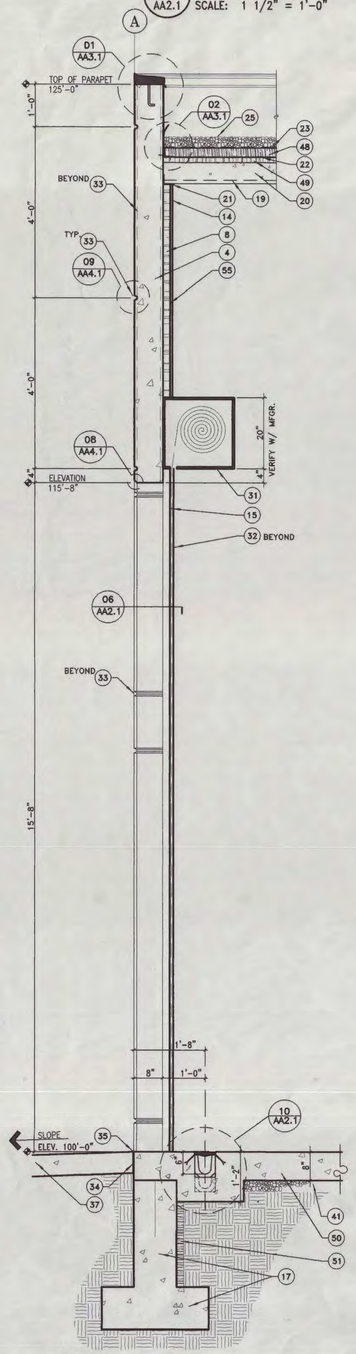

01 AA2.1 **WALL SECTION**
SCALE: 3/4" = 1'-0"

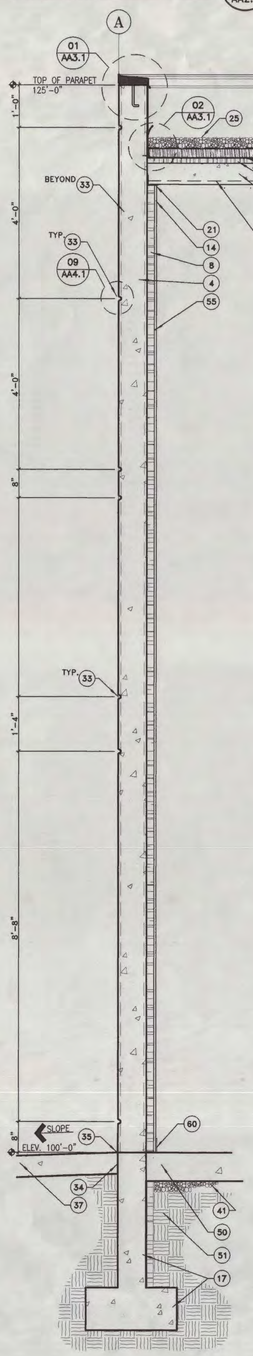

02 AA2.1 **WALL SECTION**
SCALE: 3/4"= 1'-0"

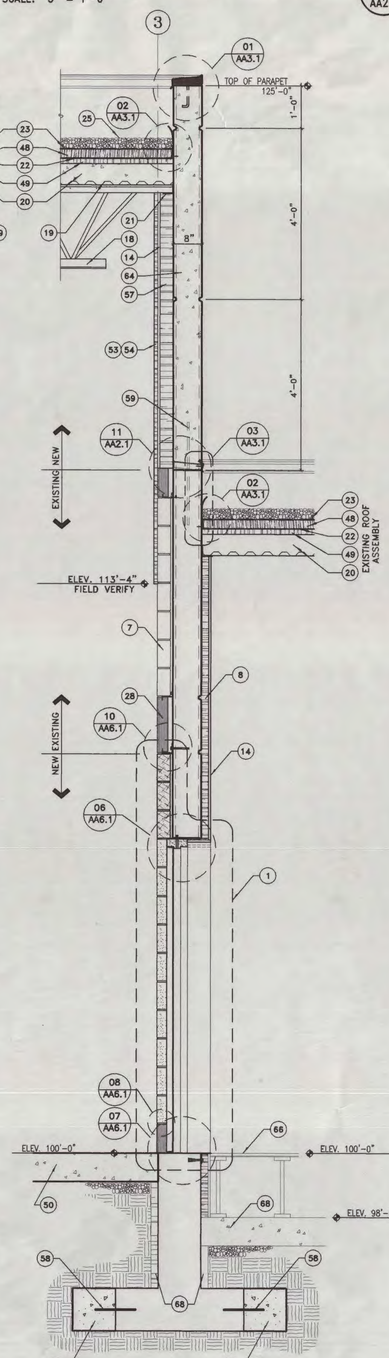

03 AA2.1 **WALL SECTION**
SCALE: 3/4" = 1'-0"

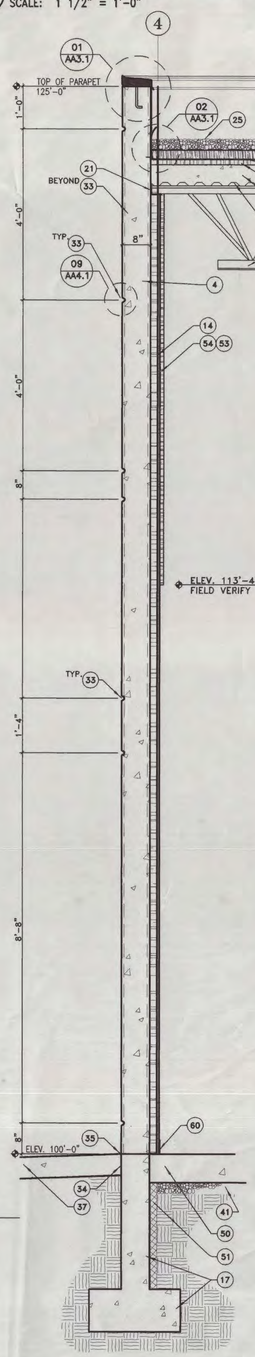

04 AA2.1 **WALL SECTION**
SCALE: 3/4" = 1'-0"

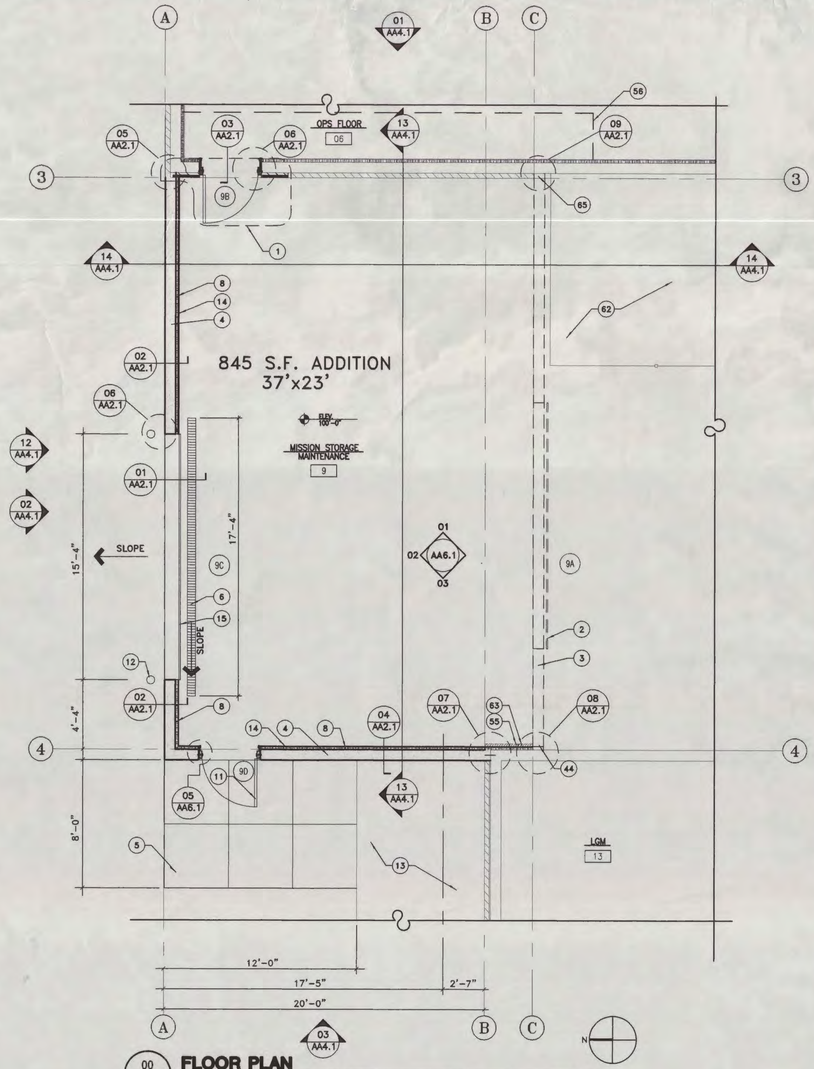

00 AA2.1 **FLOOR PLAN**
SCALE: 1/4" = 1'-0"

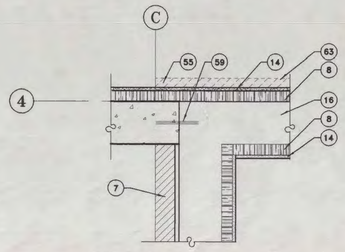

07 AA2.1 **DETAIL**
SCALE: 1" = 1'-0"

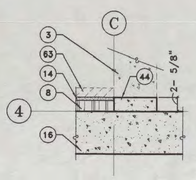

08 AA2.1 **DETAIL**
SCALE: 1" = 1'-0"

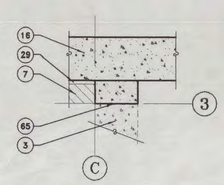

09 AA2.1 **DETAIL**
SCALE: 1" = 1'-0"

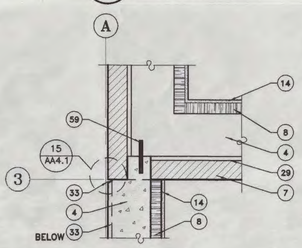

05 AA2.1 **DETAIL**
SCALE: 1" = 1'-0"

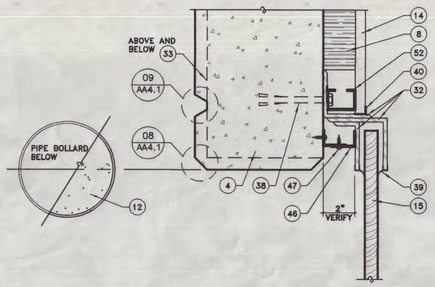

06 AA2.1 **COILING DOOR JAMB**
SCALE: 3" = 1'-0"

REFERENCE NOTES

1- REMOVE EXISTING DOOR AND PANELS. REPLACE WITH NEW DOOR AS SCHEDULED. INFILL SURROUNDING AREA WITH SALVAGED MASONRY TO MATCH EXISTING. SEE INTERIOR ELEVATIONS-SHEET AA6.1
2- 16'x16' OVERHEAD COILING INSULATED DOOR TO BE RELOCATED
3- 8" CONC. WALL TO BE REMOVED
4- 8" CONC. WALL TO MATCH EXISTING
5- NEW SIDEWALK TO MATCH EXISTING
6- TRENCH DRAIN AT DOOR
7- EXISTING 4" NOM. HONED FACE CMU
8- 2"PHENOLIC FOAM INSUL. WITH 2" Z-FURRING. SEE GYP. BD. SPEC.
9- EXISTING 3'-4" H.M. DOOR
11- NEW 3'-4" H.M. DOOR & FRAME TO MATCH EXISTING(PAINT TO MATCH)
12- STEEL PIPE BOLLARD RE: 04/AA4.1
13- EXISTING CONC. SIDEWALK TO REMAIN
14- 5/8" GYP. BD.
15- 16'x16' RELOCATED OVERHEAD COILING INSULATED DOOR
16- EXISTING CONC. WALL
17- CONC. FOUNDATION SEE STRUCT.
18- STEEL JOIST SEE STRUCT. ROOF FRAMING MAY RUN PERPENDICULAR TO THAT SHOWN SEE STRUCT.
19- METAL DECK SEE STRUCT
20- CONCRETE TOPPING SEE STRUCT.
21- STEEL ANGLE SEE STRUCT.
22- FLEXIBLE SHEET ROOF MEMBRANE TO MATCH EXISTING SYSTEM
23- RETENTION PROTECTION MAT.
24- 1 1/2" UNDERLAYMENT ROOF INSUL.
25- ROCK BALLAST
26- CONCRETE FLOOR SLAB SEE STRUCT.
27- METAL FLASHING
28- GRANITE BAND
29- AIR SPACE
30- SCHEDULED BASE
31- OVERHEAD COILING DOOR HEAD
32- OVERHEAD COILING DOOR JAMB ANGLES BY DOOR MFGR.
33- FEATURE STRIP SEE ELEVATIONS AND DETAILS ON SHEET AA4.1
34- EXPANSION JOINT MATERIAL
35- SEALANT
36- SCHEDULED FLOOR FINISH
37- EXTERIOR CONC. SLAB SEE STRUCT.
38- EXPANSION ANCHORS IN CONC. BY COILING DOOR MFGR.
39- COILING DOOR WEATHERSTRIPPING
40- METAL DRYWALL TRIM
41- FREE DRAINING GRAVEL SEE STRUCT.
42- COMPACTED FILL SEE CIVIL.
43- MASONRY VENEER ANCHOR @16" O.C. LOCATE VERTICALLY IN SAME JOINT AS HORIZ. JOINT REINF.
44- EXISTING CONCRETE WALL TO BE CUT 2 5/8" FROM EXISTING WALL
45- #4 REBAR ANCHOR
46- 18 GAGE G.I. ANGLE. PAINT TO MATCH COLOR OF DOOR FRAME ANGLES
47- ROUND HEAD SCREWS @ 12" O.C.
48- 2 1/2"EXTRUDED PLYST. ROOF INSUL.
49- 1 1/2" UNDERLAYMENT ROOF INSUL.
50- CONC. FLOOR SLAB. SEE STRUCT.
51- 2" PERIMETER INSUL.
52- 1 5/8" METAL STUD
53- FASTEN ACOUSTICAL PANELS W/(3) SCREWS EACH SIDE INTO "Z" CLIPS
54- 1" THICK ACOUSTICAL PANEL (24"x24")
55- REMOVE AND SALVAGE MASONRY, TO BE RE-USED AROUND NEW DOOR ON EAST SIDE OF MISSION STORAGE.
56- REMOVE ACCESS FLOORING AND CUT CONC. SLAB TO ALLOW ACCESS FOR NEW FOOTING (RE-INSTALL UPON COMPLETION)
57- 4" PHENOLIC FOAM INSUL. ON 4" Z-FURRING. SEE GYP. BD. SPEC.
58- ENLARGED FOOTING SEE STRUCT.
59- STEEL DOWEL SEE STUCT.
60- SCHEDULED BASE TO MATCH EXISTING
61- PRE-CAST, PRE-SLOPED TRENCHDRAIN CHANNEL BY MFGR.;SLOPED TO THE WEST 1/4" PER FT.(FOR DRAINAGE SEE MECH. RE: SHEET PA-2)
62- EXISTING MEZANINE TO REMAIN
63- REMOVE EXISTING MASONRY AND INSULATE AS DIRECTED
64- NEW CONCRETE WALL ABOVE EXISTING TO MATCH AND ALIGN WITH EXISTING
65- EXISTING CONCRETE WALL TO BE CUT FLAT TO MATCH EXISTING MASONRY. EXERCISE CARE NOT TO DAMAGE MASONRY. (RE: 09/AA2.1)
66- EXISTING ACCESS FLOORING. REMOVE TO ALLOW ACCESS FOR ENLARGED FOOTING RE-INSTALL UPON COMPLETION
67- REMOVE EXISTING MTL. STUDS AND GYP. BD. REPLACE RE: 06/AA6.1.
68- EXISTING SLAB TO BE CUT TO ALLOW ACCESS FOR ENLARGED FOOTING, REPAIR AND REPLACE UPON COMPLETION
69- METAL GRATE BY MFGR.
70- GRANITE VENEER ANCHORS, SPACE AS RECOMMENDED BY GRANITE SUPPLIER BUT NOT LESS THAN 16"O.C.
71- JOINT BETWEEN EXISTING AND NEW CONC. WALLS, SEE STRUCT.
72- TRENCH DRAIN CHAIR ASSEMBLY BY MFGR.
73- REINFORCING SEE STRUCT.
74- REMOVE EXISTING FLASHING ASSEMBLY

GENERAL NOTES

1- ABI #1 ESCC ADDITION TO BE ELIMINATED UNLESS ABI #1 IS SELECTED

AIR NATIONAL GUARD — CIVIL ENGINEERING

UTAH AIR NATIONAL GUARD BASE

765 NORTH 2200 WEST
SALT LAKE CITY, UTAH
84116-2869

FLOOR PLAN SECTIONS/DETAILS

DATE: APRIL 1, 1996
REVISED:
DRAWN BY: T. CHRISTENSEN
DRAWING NO: AA2.1

ELECTRONIC SECURITY COMMAND COMPLEX ADDITION – UTAH AIR NATIONAL GUARD
PROJ. NO. USEB 939661
ABI #1

FFKR Architects Planners II
132 Pierpont Ave. Suite 200
Salt Lake City, Utah 84101
Telephone 801 521-6186

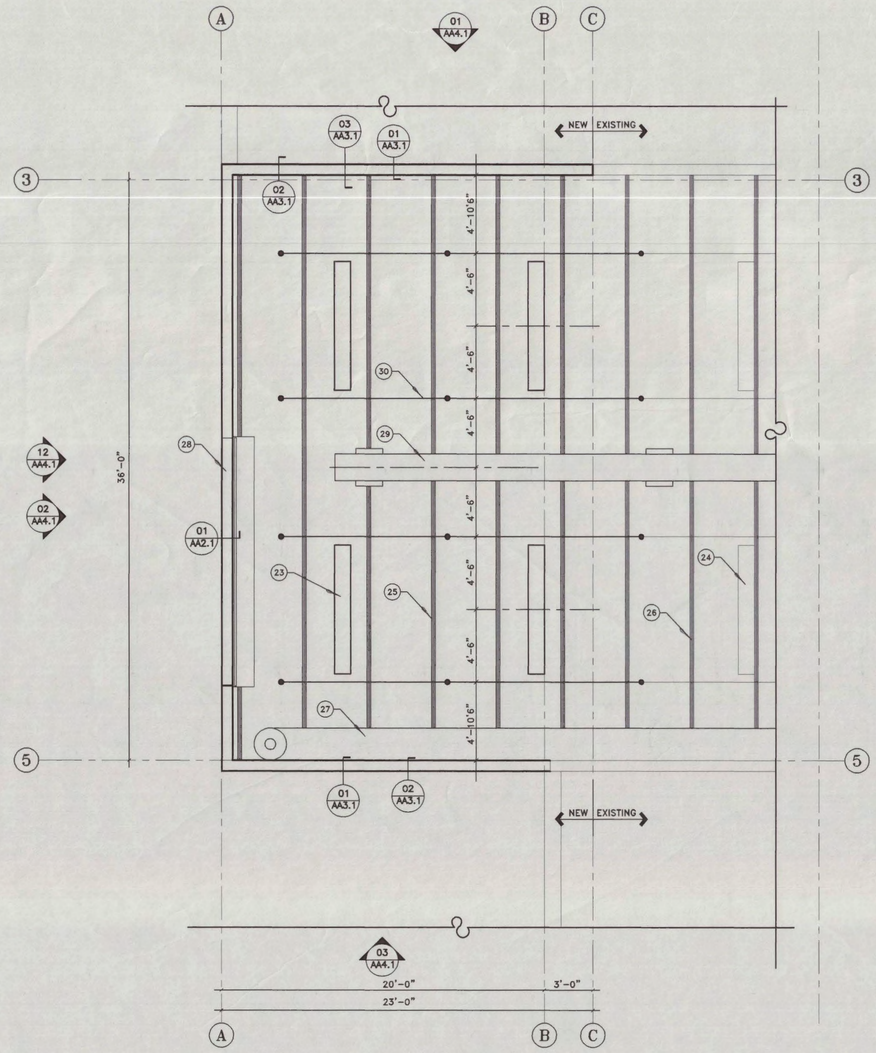

REFLECTED CEILING PLAN
SCALE= 1/4"=1'-0"

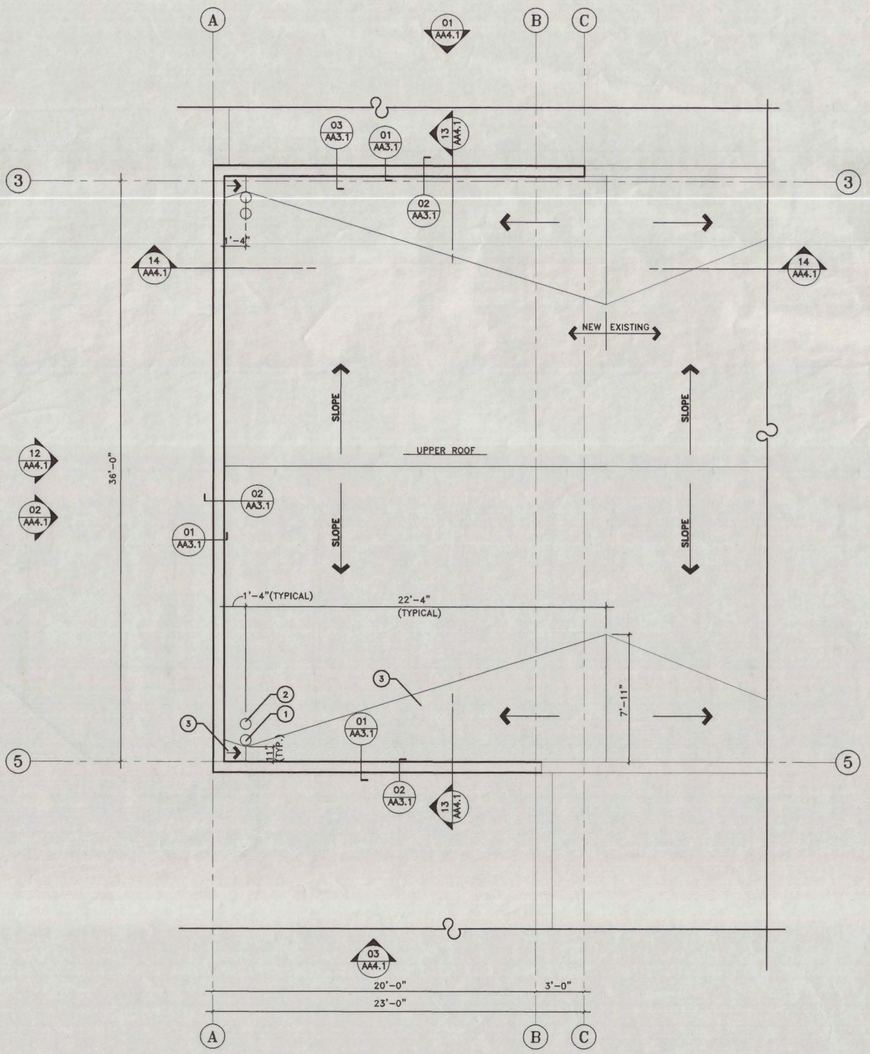

ROOF PLAN
SCALE= 1/4"=1'-0"

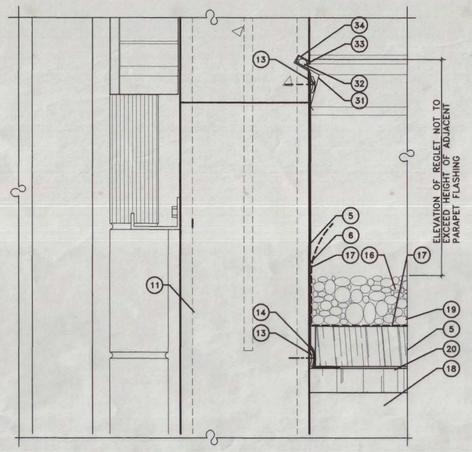

03 AA2.1 **REGLET DETAIL**
SCALE: 3" = 1'-0"

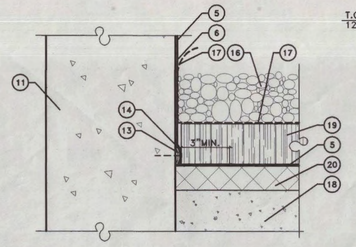

02 AA2.1 **ROOF/PARAPET INTERSECTION**
SCALE: 3" = 1'-0"

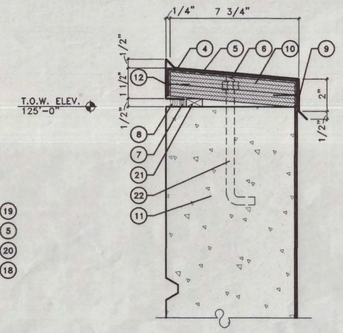

01 AA3.1 **PARAPET DETAIL**
SCALE: 3" = 1'-0"

REFERENCE NOTES

1- ROOF DRAIN
2- OVERFLOW DRAIN
3- TAPERED INSULATION CRICKET PROVIDE 1/4" PER FT. MIN. NET BACK SLOPE
4- METAL FLASHING
5- FLEXIBLE SHEET ROOFING
6- BONDING ADHESIVE
7- LEAD WEDGE ANCHOR
8- SEALANT
9- NAIL WITH NEOPRENE STAINLESS STEEL WASHER @ 12" o.c.
10- MICROLAM
11- 8" CONC. WALL SEE STRUCT.
12- ROOF MEMBRANE ANCHOR
13- RUBBER FASTENING STRIP
14- ROOF MEMBRANE SPLICE CEMENT
15- ROOF MEMBRANE SEALANT
16- ROCK BALLAST
17- RETENTION / PROTECTION MAT.
18- CONCRETE ROOF DECK
19- 2 1/2" EXTRUDED PLYST. ROOF INSUL.
20- 1 1/2" UNDERLAYMENT INSUL. TAPERED INSULATION CRICKET MAY ALSO OCCUR SEE ROOF PLAN.
21- 1/2" PLYWOOD CONTINUOUS
22- 1/2"x8"ANCHOR BOLT 32" O.C. COUNTERSINK IN MICROLAM
23- NEW LIGHT FIXTURES TO MATCH EXISTING
24- EXISTING LIGHT FIXTURES
25- NEW METAL TRUSSES
26- EXISTING METAL TRUSSES
27- FLEXIBLE DUCT TO BE EXTENDED
28- RELOCATED OVERHEAD COILING DOOR
29- EXPOSED MECHANICAL DUCT TO BE EXTENDED AND PAINTED TO MATCH EXISTING.
30- FIRE SPRINKLER LINE TO BE EXTENDED
31- CAP FLASHING SEE SPEC.
32- LEAD WEDGES @ 12" O.C.
33- ELASTONOMETRIC SEALANT, SEE SPEC.
34- CAST IN PLACE METAL REGLET, SEE SPEC.

GENERAL NOTES

1- ABI #1 ESCC ADDITION TO BE ELIMINATED UNLESS ABI #1 IS SELECTED

AIR NATIONAL GUARD CIVIL ENGINEERING

UTAH AIR NATIONAL GUARD BASE
785 NORTH 2200 WEST
SALT LAKE CITY, UTAH
84116-2999

ROOF PLAN/DETAILS

DATE: APRIL 1, 1996
REVISED:
DRAWN BY: T.CHRISTENSEN
DRAWING NO: AA3.1

ELECTRONIC SECURITY COMMAND COMPLEX ADDITION – UTAH AIR NATIONAL GUARD
PROJ. NO. USEB 939661
ABI #1

FFKR Architects Planners II
132 Pierpont Ave. Suite 200
Salt Lake City, Utah 84101
Telephone 801 521-8186

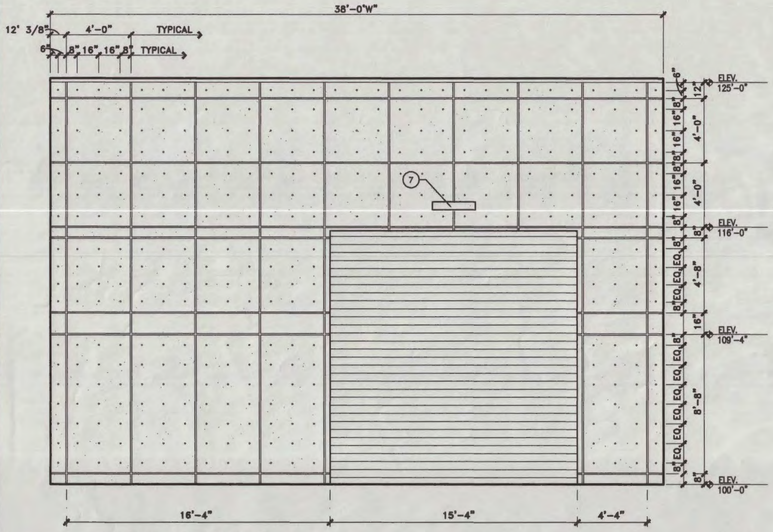

12 / AA4.1 NORTH ELEVATION ARCHITECTURAL (SPECIAL FINISH) CONCRETE
SCALE: 1/4"=1'-0"

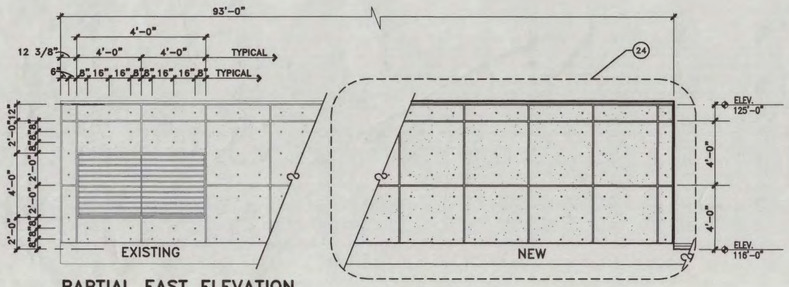

11 / AA4.1 PARTIAL EAST ELEVATION ARCHITECTURAL (SPECIAL FINISH) CONCRETE
SCALE: 1/4"=1'-0"

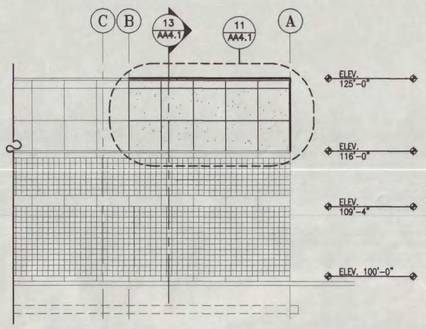

01 / AA4.1 EAST ELEVATION
SCALE: 1/8" = 1'-0"

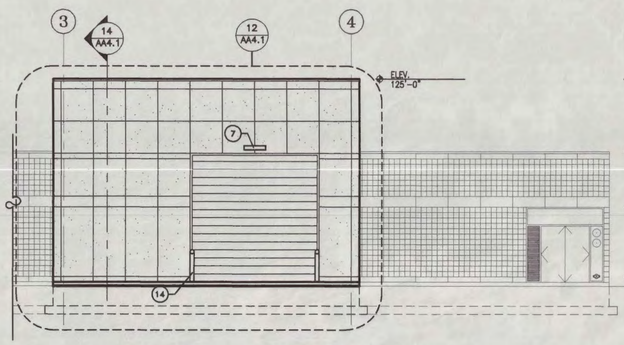

02 / AA4.1 NORTH ELEVATION
SCALE: 1/8" = 1'-0"

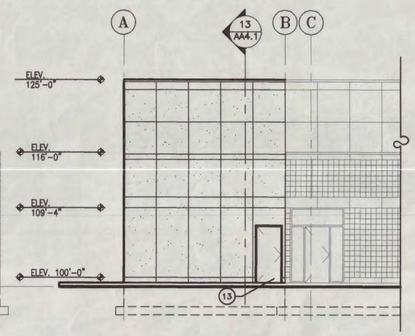

03 / AA4.1 WEST ELEVATION
SCALE: 1/8" = 1'-0"

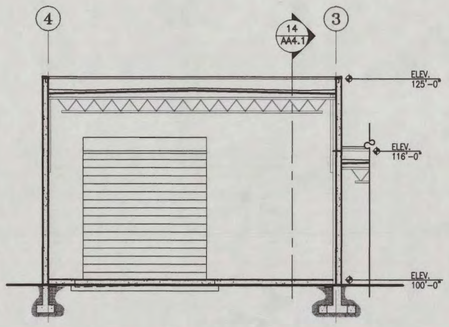

13 / AA4.1 BUILDING SECTION
SCALE: 1/8" = 1'-0"

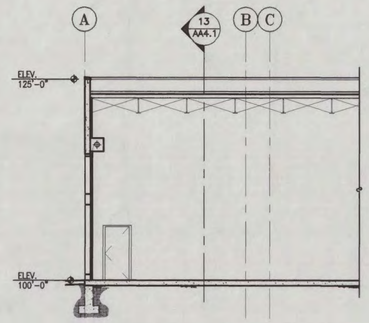

14 / AA4.1 BUILDING SECTION
SCALE: 1/8" = 1'-0"

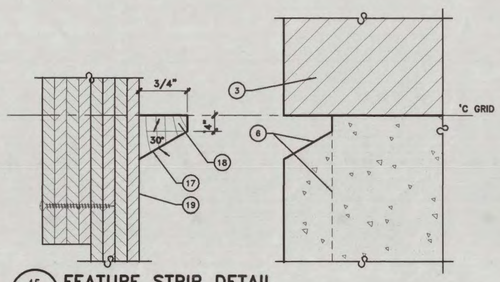

15 / AA4.1 FEATURE STRIP DETAIL
SCALE: FULL SIZE

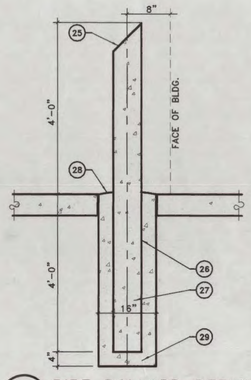

04 / AA4.1 PIPE BOLLARD DETAIL
SCALE: 3/4" = 1'-0"

05 / AA4.1 NOT USED
SCALE: FULL SIZE

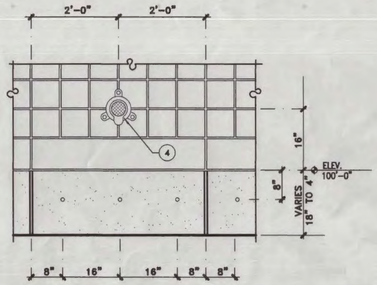

10 / AA4.1 DOWNSPOUT NOZZLE ARCHITECTURAL CONCRETE BASE
SCALE: 3/4"=1'-0"

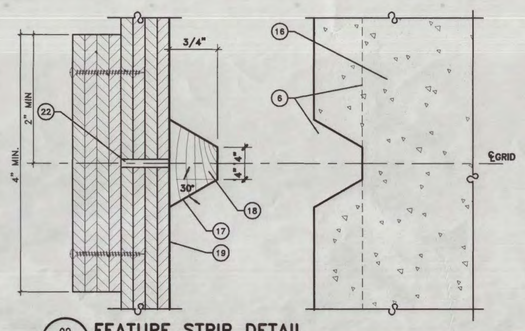

09 / AA4.1 FEATURE STRIP DETAIL
SCALE: FULL SIZE

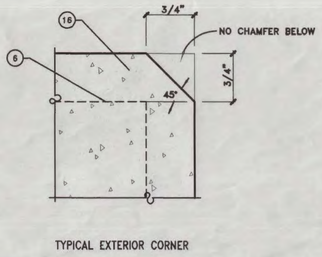

TYPICAL EXTERIOR CORNER

08 / AA4.1 DETAIL
SCALE: FULL SIZE

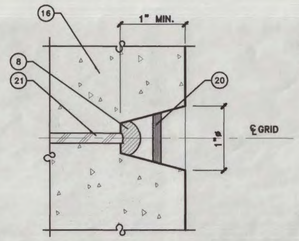

07 / AA4.1 FORM TIE PLUG
SCALE: FULL SIZE

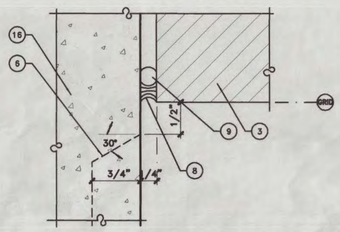

06 / AA4.1 FEATURE STRIP DETAIL
SCALE: FULL SIZE

REFERENCE NOTES

1- ARCHITECTURAL CONCRETE (SPECIAL FINISH)
2- CONTINUOUS GRANITE BAND
3- EXISTING HONED FACE CMU
4- DOWNSPOUT NOZZLE. RE: MECH.
5- FORM TIE HOLE WITH PLUG
6- FEATURE STRIP
7- LIGHT FIXTURE
8- SEALANT
9- BACKER ROD
10- REGLET
11- FINISH GRADE BEYOND
12- FINISH GRADE AT FACE OF BUILDING
13- STEEL (HOLLOW METAL) DOOR, FRAME & PANELS
14- STEEL PIPE BOLLARD. RE: 4/AA4.1
15- OVERHEAD COILING INSULATED DOOR
16- 8" CONC. WALL TO MATCH EXISTING
17- MITRE ALL CORNERS
18- FEATURE STRIP FORM
19- HDO CONC. FORMING PLYWOOD
20- FORM TIE HOLE PLUG
21- STEEL FORM TIE
22- ALL JOINTS IN FORMING PLYWOOD TO OCCUR BEHIND FEATURE STRIP FORM
23- 4" MIN. BY CONTINUOUS PLYWOOD STRIP AT ALL FORMING PLYWOOD JOINTS
24- ARCHITECTURAL CONCRETE TO MATCH EXISTING.
25- 1/4" R. TOP CAP. WELD AND GRIND SMOOTH
26- 6"ø STD. STEEL PIPE WITH SLOPED TOP, PAINTED
27- FILL SOLID WITH CONCRETE
28- SLOPE CAP TO DRAIN
29- 16"ø CONCRETE FOUNDATION SEE PLAN FOR LOCATION

GENERAL NOTES

1- ABI #1 ESCC ADDITION TO BE ELIMINATED UNLESS ABI #1 IS SELECTED

AIR NATIONAL GUARD CIVIL ENGINEERING

UTAH AIR NATIONAL GUARD BASE
785 NORTH 2200 WEST
SALT LAKE CITY, UTAH
84116-2999

EXTERIOR ELEVATIONS DETAILS

DATE: APRIL 1, 1996
REVISED:
DRAWN BY: T.CHRISTENSEN
DRAWING NO: AA4.1

ELECTRONIC SECURITY COMMAND COMPLEX ADDITION – UTAH AIR NATIONAL GUARD
PROJ. NO. USEB 939661
ABI #1

FFKR Architects Planners II
132 Pierpont Ave. Suite 200
Salt Lake City, Utah 84101
Telephone 801 521-6186

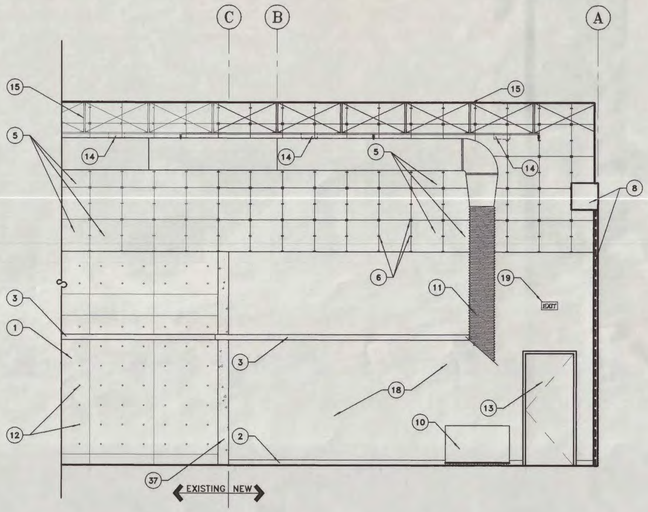

03 AA6.1 **MISSION STORAGE (WEST)**
SCALE: 1/4" = 1'-0"

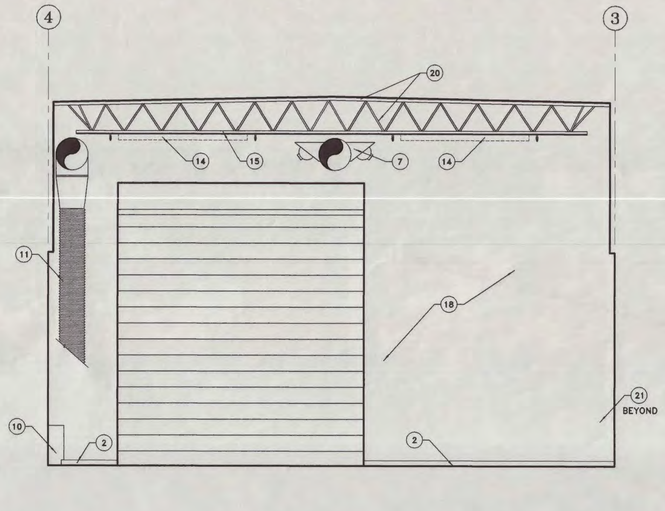

02 AA6.1 **MISSION STORAGE (NORTH)**
SCALE: 1/4" = 1'-0"

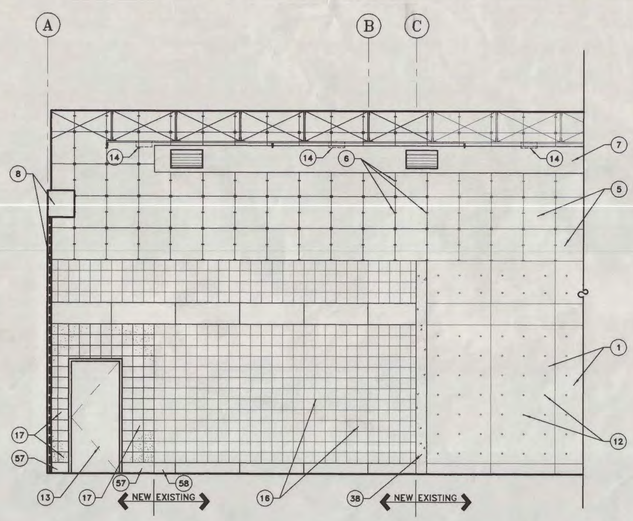

01 AA6.1 **MISSION STORAGE (EAST)**
SCALE: 1/4" = 1'-0"

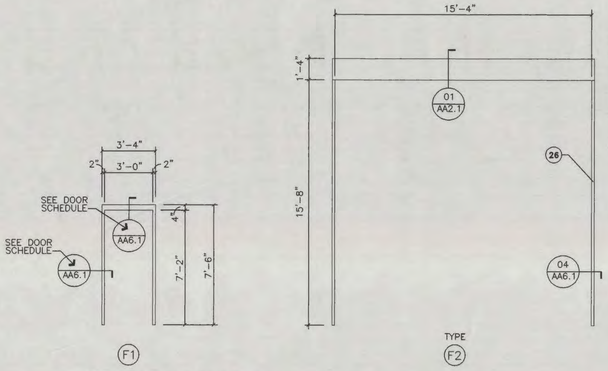

FRAME TYPES HOLLOW METAL FRAME TYP. U.N.O.
SCALE: 1/4" = 1'-0"

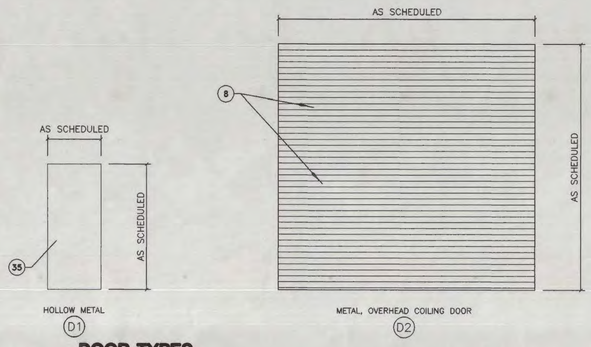

DOOR TYPES
SCALE: 1/4" = 1'-0"

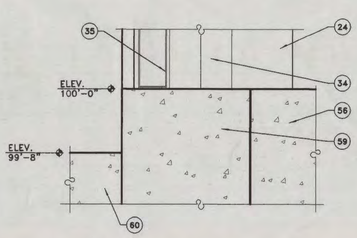

12 AA6.1 **DOOR SILL DETAIL**
SCALE: 3" = 1'-0"

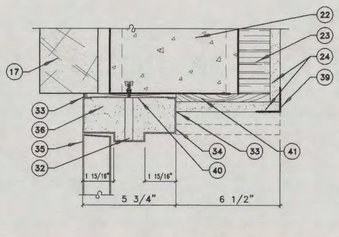

06 AA6.1 **DOOR HEAD/JAMB DETAIL**
SCALE: 3" = 1'-0"

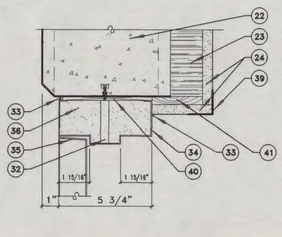

05 AA6.1 **DOOR HEAD/JAMB DETAIL**
SCALE: 3" = 1'-0"

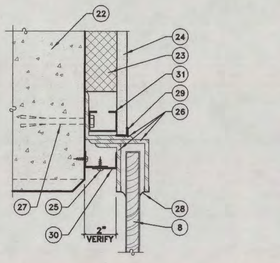

04 AA6.1 **COILING DOOR-JAMB DETAIL**
SCALE: 3" = 1'-0"

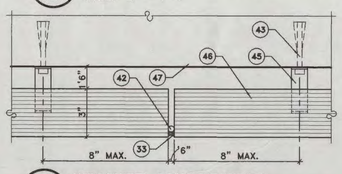

09 AA6.1 **GRANITE JOINT DETAIL**
SCALE: 3" = 1'-0"

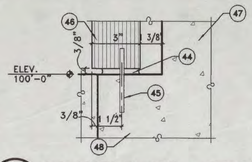

11 AA6.1 **GRANITE DETAIL @ FOUNDATION**
SCALE: 3" = 1'-0"

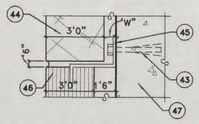

08 AA6.1 **GRANITE DETAIL BELOW CMU**
SCALE: 3" = 1'-0"

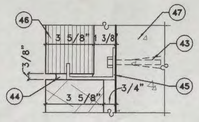

10 AA6.1 **GRANITE DETAIL ABOVE CMU**
SCALE: 3" = 1'-0"

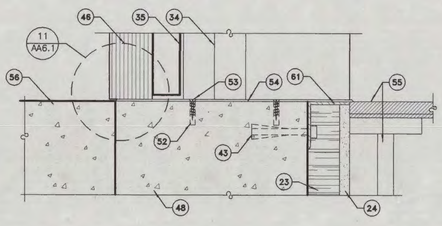

07 AA6.1 **DOOR SILL DETAIL**
SCALE: 3" = 1'-0"

DOOR SCHEDULE

OPENING NUMBER	ROOM NAME	FIRE RATING	FRAME	DOOR						DETAILS			HARDWARE GROUP	REMARKS	OPENING NUMBER
			FRAME TYPE	DOOR TYPE	ALUMINUM	METAL	WOOD	THICKNESS	HEIGHT	WIDTH	JAMB	HEAD	THRESHOLD			
FIRST FLOOR																
9B	MISSION STORAGE (9)	20MIN.	F1	D1		X		1 "W"	7'-2"	3'-0"	06/AA6.1	06/AA2.1	07/AA2.1		SEE FRAME ELEVATIONS FOR DETAILS	9B
9C	MISSION STORAGE (9)		F2	D2		X		1 "W"	15'-8"	15'-4"	04/AA6.1	02/AA2.1	02/AA2.1		RELOCATED, COILING DOOR (OVERHEAD)	9C
9D	MISSION STORAGE (9)	20MIN.	F1	D1		X		1 "W"	7'-2"	3'-0"	05/AA6.1	05/AA2.1	12/AA2.1		SEE FRAME ELEVATIONS FOR DETAILS	9D

FINISH SCHEDULE

ROOM NUMBER	ROOM NAME	FLOOR										BASE				WALLS												CEILING										REMARKS
		SEALED CONCRETE	SPECIAL COATING CONCRETE									COVED RUBBER BASE	NONE			PAINTED GYPSUM BOARD	ARCHITECTURAL CONCRETE	ACOUSTICAL BOARD	EXPOSED CMU	EXPOSED CONCRETE								EXPOSED STRUCTURE PAINTED	EXPOSED STRUCT. UNPAINTED									CEILING HEIGHT ABOVE FINISH FLOOR	
		1	2	3	4	5	6	7	8	9	10	1	2	3	4	5	6	7	8	1	2	3	4	5	6	7	8	9	10	1	2	3	4	5	6	7	8	9	10	
												E	N	W	S	EAST		NORTH		WEST		SOUTH																
9	MISSION STORAGE	1										3	1	1,3	N/A	2,3,4,5		1		1,2,3,5		N/A								1										VARIES

REMARKS
PAINT EXPOSED STRUCT.,FLOOR & DECK TO MATCH

REFERENCE NOTES

1- ARCHITECTURAL CONCRETE (SPECIAL FINISH)
2- SCHEDULED BASE
3- ELECTRICAL RACEWAY TO BE EXTENDED
4- FEATURE STRIP RE: 09\AA4.1
5- 1" THICK x2'x2' ACOUSTIC PANELS, OVER 2" PHENOLIC FOAM INSUL. WITH 2" Z- FURRING. FASTEN WITH 3 SCREWS EACH SIDE INTO Z- FURRING.
6- TYPICAL FASTENER PATTERN.
7- EXPOSED MECHANICAL DUCT TO BE EXTENDED AND PAINTED TO MATCH EXISTING.
8- RELOCATED, OVERHEAD COILING DOOR AND FRAME.
9- COMPRESSED AIR SUPPLY LINE
10- FAN COIL HEATER UNIT (TO BE RELOC.)
11- FLEXIBLE DUCT
12- FORM TIE HOLE WITH PLUG RE: 07\AA4.1
13- NEW STEEL HOLLOW METAL DOOR AND FRAME AS SCHEDULED, PAINTED TO MATCH EXISTING.
14- LIGHT FIXTURES RE: ELEC.
15- ROOF JOISTS
16- EXISTING EXPOSED CMU WALL
17- CMU SALVAGED AND REUSED
18- PAINTED GYP. BD. SEE SPEC.
19- EXIT LIGHT RE: MECH
20- EXPOSED STRUCTURE, PAINTED TO MATCH EXISTING
21- ALIGN INSULATION BUTT-JOINTS WITH FEATURE STRIPS IN ARCHITECTURAL CONC.
22- 8" CONC. WALL TO MATCH EXISTING
23- 2" PHENOLIC FOAM INSUL. WITH 2" Z- FURRING. SEE GYP. BD. SPEC.
24- 5/8" GYP. BD.
25- ROUND HEAD SCREWS @12" O.C.
26- OVERHEAD COILING DOOR JAMB ANGLES BY DOOR MFGR.
27- EXPANSION ANCHORS IN CONC. BY DOOR MFGR.
28- COILING DOOR WEATHERSTRIPPING
29- METAL DRYWALL TRIM
30- 18 GAGE G.I. ANGLE, PAINT TO MATCH COLOR OF DOOR FRAME ANGLES
31- 1 5/8" METAL STUDS
32- JAMB ANCHOR
33- SEALANT
34- STEEL (HOLLOW METAL) FRAME
35- STEEL (HOLLOW METAL) DOOR
36- GROUT
37- EXISTING CONC. WALL TO BE CUT TO 2 5/8" RE: 08/AA2.1
38- EXISTING WALL TO BE CUT FLUSH WITH ADJACENT MASONRY. EXERCISE EXTREME CARE NOT TO DAMAGE MASONRY.
39- DRYWALL CORNER BEAD
40- SHIM
41- 1/2" THICK CONTINUOUS PLYWOOD, CUT TO FIT.
42- BACKER ROD
43- EXPANSION BOLT ANCHOR
44- MORTAR JOINTS
45- GRANITE VENEER ANCHORS, SPACE AS RECOMMENDED BY GRANITE SUPPLIER BUT SPACE NOT TO EXCEED 16"O.C.
46- GRANITE BAND MATERIAL
47- EXISTING CONCRETE WALL
48- EXISTING CONCRETE FOOTING
49- EXISTING CONCRETE SLAB
50- EXISTING OR SALVAGED/REUSED MASONRY AS PER SITUATION
51- 1/4" BENT PLATE
52- LEAD SCREW LEAD
53- COUNTER-SUNK FLAT HEAD SCREW
54- COVERPLATE TYPE THRESHOLD
55- ACCESS FLOORING
56- NEW CONC. SLAB
57- SALVAGED GRANITE RE: 07/AA2.1
58- EXISTING GRANITE BAND
59- NEW CONCRETE FOOTING SEE STRUCT.
60- NEW CONC. SIDEWALK SEE STRUCT.
61- STEEL ANGLE

2- ABI #1 ESCC ADDITION TO BE ELIMINATED UNLESS ABI #1 IS SELECTED

GENERAL NOTES

1. ACCESS DOORS AND PANELS SHOWN ON DRAWINGS AND SCHEDULE ARE KNOWN LOCATIONS AND DO NOT LIMIT THE NUMBER OF ACCESS DOORS OR PANELS REQUIRED. COORDINATE WITH ELECTRICAL, SOUND, PLUMBING, HVAC, AND OTHER TRADES AS TO REQUIREMENTS (CODE AND MAINTENANCE) FOR ADDITIONAL ACCESS DOORS AND PANELS.

AIR NATIONAL GUARD
CIVIL ENGINEERING

UTAH AIR NATIONAL GUARD BASE
765 NORTH 2200 WEST
SALT LAKE CITY, UTAH
84116-2999

INTERIOR ELEVATIONS

ELECTRONIC SECURITY COMMAND COMPLEX ADDITION – UTAH AIR NATIONAL GUARD
PROJ. NO. USEB 939661
ABI #1

FFKR Architects Planners II
132 Pierpont Ave. Suite 200
Salt Lake City, Utah 84101
Telephone 801 521-6186

DATE: APRIL 1, 1996
REVISED:
DRAWN BY: T. CHRISTENSEN
DRAWING NO: **AA6.1**

NOTE!

1. ALL EXISTING UTILITY LINES AND SERVICES SHOWN ARE BASE UPON OWNER FURNISHED "AS-BUILT DRAWINGS AND EXISTING SURFACE FIELD FOUND DATA. THE ENGINEER AND ARCHITECT ARE NOT RESPONSIBLE FOR OWNER FURNISHED DATA ON THIS DRAWING.
2. THIS DRAWING SHOWS EXISTING KNOWN CONDITIONS, EXISTING ELEVATIONS AND CONTOURS ONLY.
3. NEW BUILDING FOOT PRINT WITH APPROACH SLABS AND ADJACENT SIDEWALKS ARE SHOWN FOR GENERAL LOCATION INFORMATION ONLY. SEE SHEET C2.1.
4. ALL EXISTING MATERIAL STOCK PILES SHOWN SHALL BE REMOVED BY OTHERS UNLESS INDICATED OTHERWISE.
5. CONTRACTOR MAY DISPOSE OF SURPLUS EXCAVATED MATERIAL ON BASE NORTHWEST OF BUILDING 106. MATERIAL CONTAINING RUBBLE, CONCRETE, ASPHALT ETC. SHALL BE LEGALLY DISPOSED OF OFF SITE.

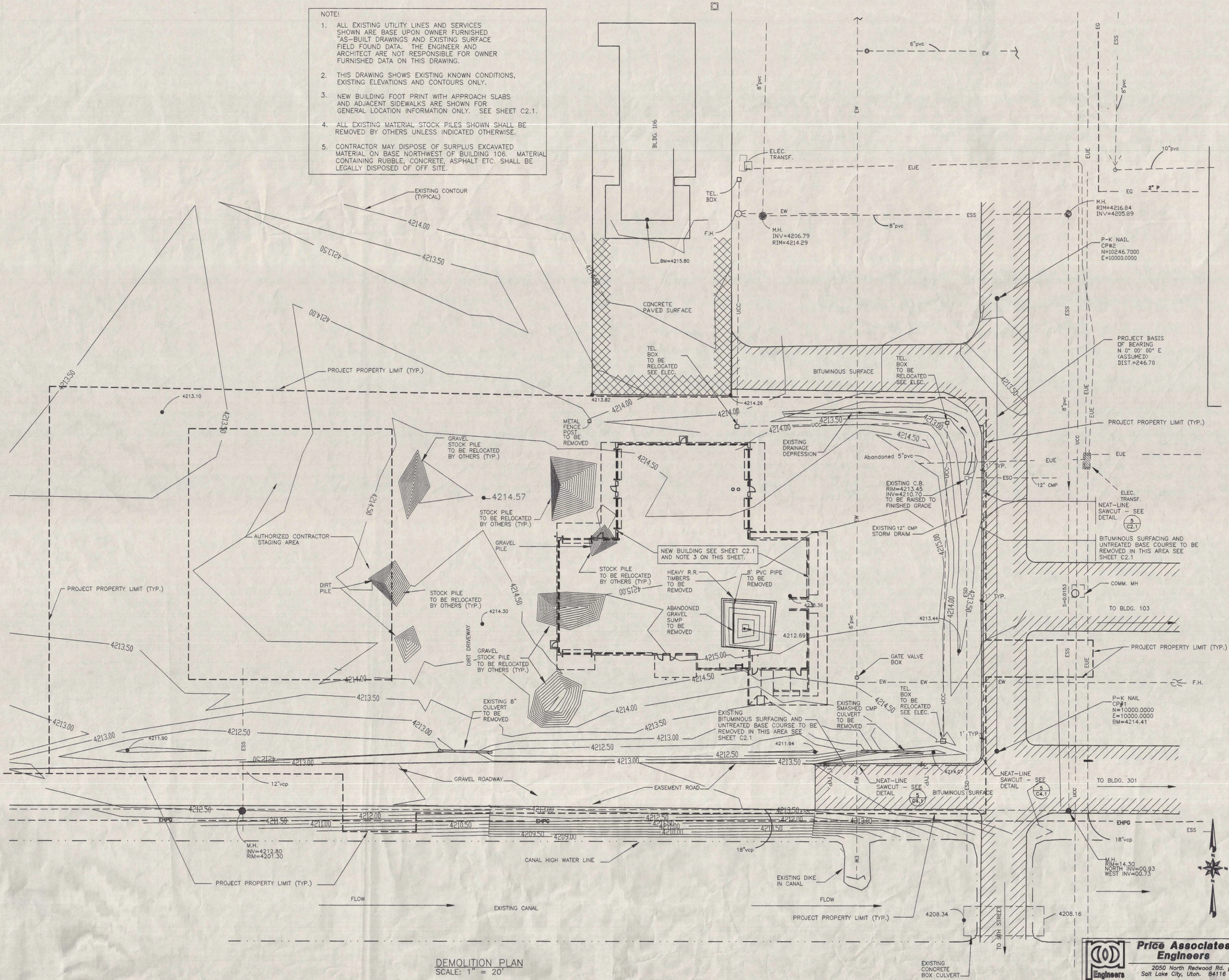

DEMOLITION PLAN
SCALE: 1" = 20'

REFERENCE NOTES

GENERAL NOTES

LEGEND

- ESS — EXISTING SANITARY SEWER
- EUE — EXISTING UNDERGROUND ELEC.
- EW — EXISTING WATER
- EHPG — EXISTING HIGH PRESSURE GAS
- EG — EXISTING GAS
- UCC — UNDERGROUND COMUNICATION
- ESD — EXISTING STORM DRAIN

AIR NATIONAL GUARD CIVIL ENGINEERING

UTAH AIR NATIONAL GUARD BASE

785 NORTH 2200 WEST
SALT LAKE CITY, UTAH
84116-2999

DEMOLITION PLAN

REGISTERED PROFESSIONAL ENGINEER No. 143441 TERRY R PRICE STATE OF UTAH

ELECTRONIC SECURITY SQUADRON FACILITY – UTAH AIR NATIONAL GUARD
PROJ. NO. USEB 939661

Price Associates, Engineers
2050 North Redwood Rd. #40
Salt Lake City, Utah. 84116
Phone: (801) 355-1000
Fax: (801) 355-1098

FFKR Architects Planners II
132 Pierpont Ave. Suite 200
Salt Lake City, Utah 84101
Telephone 801 521-6186

DATE: APRIL 1, 1996
REVISED:
DRAWN BY: CDP
DRAWING NO: C1.1

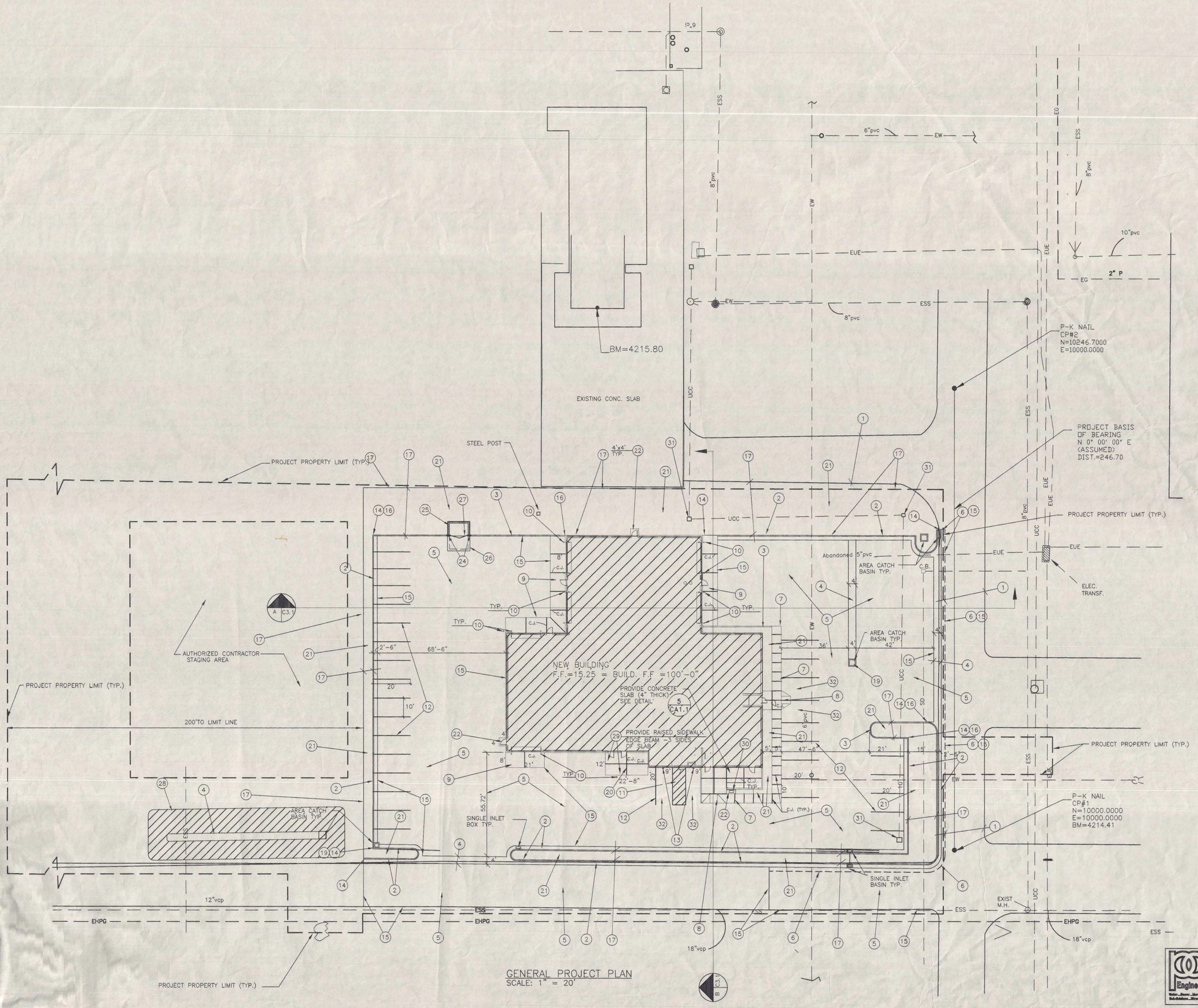

GENERAL PROJECT PLAN
SCALE: 1" = 20'

REFERENCE NOTES

20. CONCRETE SLAB AT ENTRANCE –SEE DETAIL 5/CA1.1
21. LANDSCAPED AREA –SEE SH._____
22. 4" THICK CONCRETE PAD
23. GAS PAD CONCRETE SLAB –SEE DETAIL 4/C4.3
24. TERMINAL END –SEE DETAIL 10/C4.2
25. GARBAGE DUMPSTER AREA SEE LARGE SCALE PLAN ON SHEET C2.2
26. CONCRETE SLAB APRON –SEE DETAIL 1/C4.3
27. CHAIN LINK DOUBLE SWING GATE W/WOOD SLATS –SEE DETAIL 3/C4.3
28. NEW DETENTION BASIN
29. PROVIIDE 6" THICK CONCRTE SLAB WITH #4 @ 12" EACH WAY AND RAISED SIDEWALK EDGE BEAM ON THREE SIDES OF SLAB – SEE DETAIL 6/C4.1
30. NEW GAS METER SET–FURNISHED /INSTALLED BY MT. FUEL SUPPLY CO. AND PAID FOR BY THIS CONTRACTOR
31. TEL. BOX –SEE ELEC.
32. DISABLED PARKING

1. EXISTING BITUMINOUS ROADWAY TO REMAIN
2. PROVIDE CONCRETE CURB/GUTTER –SEE DETAIL 1/C4.1
3. PROVIDE CONCRETE CURB –SEE DETAIL 2/C4.1
4. PROVIDE CONCRETE WATERWAY –SEE DETAIL 3/C4.1
5. PROVIDE BITUMINOUS SURFACING IN THIS AREA –SEE DETAIL 4/C4.1
6. PROVIDE NEAT–LINE SAWCUT –SEE DETAIL 5/C4.1
7. NEW CONCRETE RAISED SIDEWALK EDGE BEAM –SEE DETAIL 6/C4.1
8. PROVIDE DISABLED RAMP –SEE DETAIL 11/C4.2 7/C4.1
9. PROVIDE CONCRETE SLAB APPROACH APRON –SEE DETAIL 8/C4.1
10. PROVIDE BOLLARD POST TYPICAL EACH SIDE OF OVERHEAD DOORS SEE ARCHITECTURAL DRAWINGS
11. NO–PARKING AREA PAINT STRIPE –SEE DETAIL 8/C4.2
12. PAINT STRIPING –TYPICAL
13. DISABLED SIGN AT HEAD OF STALL 42" HIGH –SEE ARCHITECTURAL
14. LIMIT OF CURB/GUTTER
15. LIMIT OF BITUMINOUS SURFACING
16. LIMIT OF CURB
17. LIMIT OF LANDSCAPED AREA
18. PROVIDE WATER LINE PIPE CAP FOR LANDSCAPED IRRIGATION IN THIS AREA
19. PROVIDE AREA CATCH BASIN –SEE DETAIL 10/C4.1

GENERAL NOTES

LEGEND

SS	NEW SANITARY SEWER
RD	NEW ROOF DRAIN
W	NEW WATER PIPING
F	NEW FIRE LINE
G	NEW GAS LINE
ESS	EXISTING SANITARY SEWER
EUE	EXISTING UNDERGROUND ELEC.
EW	EXISTING WATER
EHPG	EXISTING HIGH PRESSURE GAS
EG	EXISTING GAS
UCC	UNDERGROUND COMUNICATION
SD	EXISTING STORM DRAIN

AIR NATIONAL GUARD CIVIL ENGINEERING

UTAH AIR NATIONAL GUARD BASE

785 NORTH 2200 WEST
SALT LAKE CITY, UTAH
84116-2999

GENERAL PROJECT PLAN

Price Associates, Engineers
2050 North Redwood Rd. #40
Salt Lake City, Utah. 84116
Phone: (801) 355-1000
Fax: (801) 355-1096

REGISTERED PROFESSIONAL ENGINEER
No. 143441
TERRY R PRICE
STATE OF UTAH

ELECTRONIC SECURITY SQUADRON FACILITY — UTAH AIR NATIONAL GUARD
PROJ. NO. USEB 939661

FFKR Architects Planners II
132 Pierpont Ave. Suite 200
Salt Lake City, Utah 84101
Telephone 801 521-6186

DATE: APRIL 1, 1998
REVISED:
DRAWN BY: CDP
DRAWING NO: C2.1

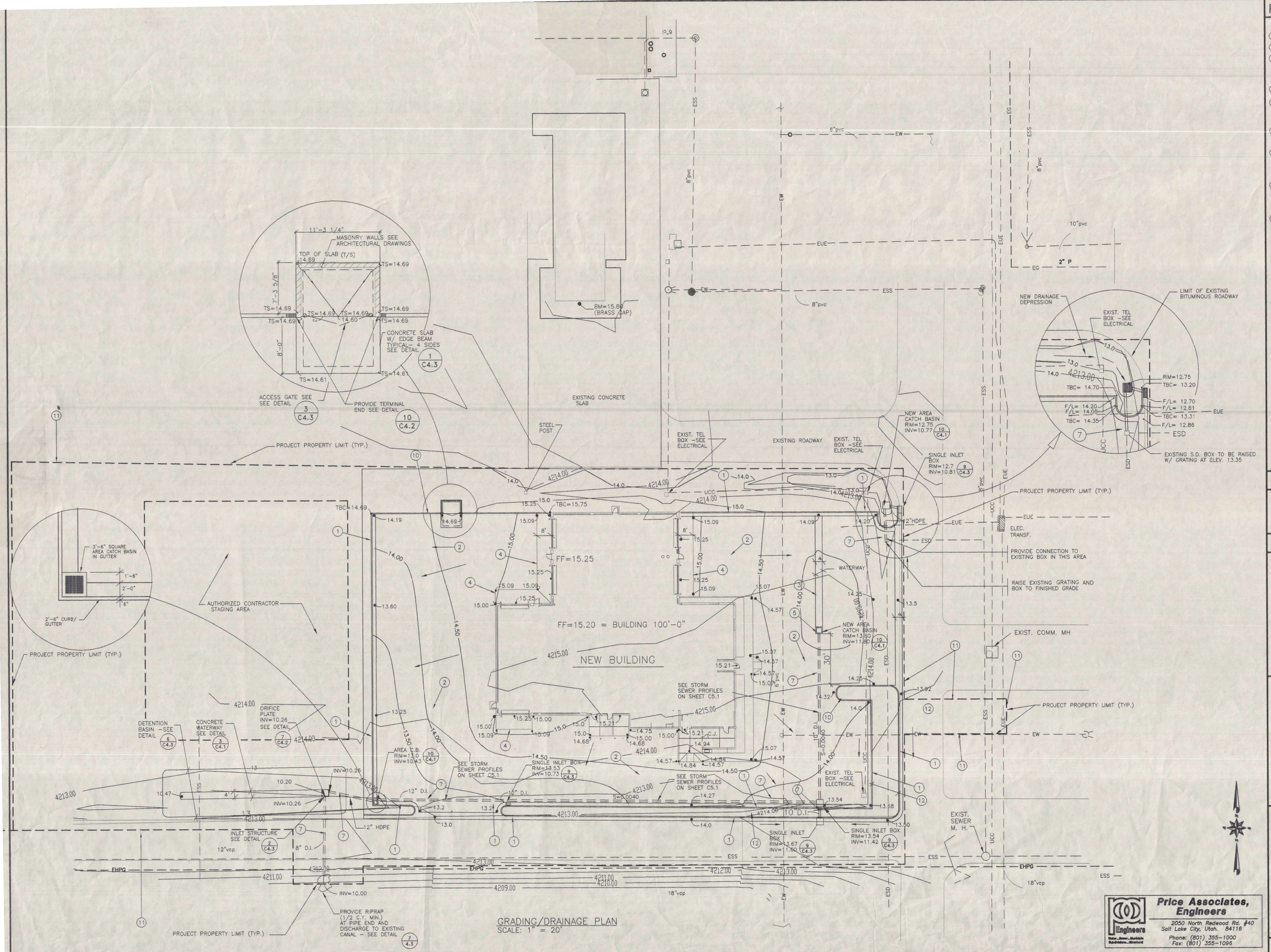

GRADING/DRAINAGE PLAN
SCALE: 1" = 20'

REFERENCE NOTES

1. CONCRETE CURB/GUTTER
2. BITUMINOUS SURFACING
3. CONCRETE WATERWAY -SEE DETAIL 3/C4.1
4. LIMIT OF BITUMINOUS SURFACING
5. AREA CATCH BASIN -SEE DETAIL 10/C4.1
6. PROVIDE NEW CONNECTION TO ROOF DRAIN PIPING IN THIS AREA FOR CONTINUATION SEE SH P-
7. PROVIDE NEW STORM DRAIN PIPING -SEE DETAIL 3/C4.2
8. PROVIDE CLEANOUT TO GRADE -SEE DETAIL 4/C4.2
9. FOR PROFILE OF PIPING SEE SH.C5.1
10. CONCRETE CURB -SEE DETAIL 2/C4.1
11. LIMIT OF CONSTRUCTION (TYPICAL)
12. FOR FINISHED GRADING IN THIS AREA-- SEE LANDSCAPE PLAN.

GENERAL NOTES

LEGEND

SS	NEW SANITARY SEWER
RD	NEW ROOF DRAIN
W	NEW WATER PIPING
F	NEW FIRE LINE
G	NEW GAS LINE
ESS	EXISTING SANITARY SEWER
EUE	EXISTING UNDERGROUND ELEC.
EW	EXISTING WATER
EHPG	EXISTING HIGH PRESSURE GAS
EG	EXISTING GAS
UCC	UNDERGROUND COMUNICATION
SD	EXISTING STORM DRAIN

UTAH AIR NATIONAL GUARD BASE
765 NORTH 2200 WEST
SALT LAKE CITY, UTAH
84116-2999

GRADING/DRAINAGE PL.

Price Associates, Engineers
2050 North Redwood Rd. #40
Salt Lake City, Utah. 84116
Phone: (801) 355-1000
Fax: (801) 355-1096

No. 143441 TERRY R PRICE — REGISTERED PROFESSIONAL ENGINEER — STATE OF UTAH

ELECTRONIC SECURITY SQUADRON FACILITY – UTAH AIR NATIONAL GUARD
PROJ. NO. USEB 939661

FFKR Architects Planners II
132 Pierpont Ave. Suite 200
Salt Lake City, Utah 84101
Telephone 801 521-6186

DATE: APRIL 1, 1996
REVISED:
DRAWN BY: CDP
DRAWING NO: C2.2

COORDINATE TABLE

#	N	E
1	10167.5411	9865.5411
2	10167.9761	9979.5415
3	10163.9741	9990.5408
4	10171.3307	9990.5421
5	10097.9814	9947.4781
6	10118.9968	9865.5323
7	10119.4893	9907.5324
8	10024.9893	9907.5155
9	10024.9969	9864.8488
10	10062.9741	9990.5224
11	9997.5392	9990.5105
12	9992.5403	9985.4617
13	10067.9750	9985.5233
14	10067.9799	9958.5233
15	10060.3070	9958.4932
16	10060.1406	9975.5219
17	9997.6378	9975.5106
18	9999.6869	9765.6991
19	9994.6871	9765.6502
20	9995.2243	9710.6531
21	9995.4828	9684.1768
22	10000.2240	9710.7019
23	10000.4342	9689.1777
24	10168.0284	9689.2078
25	10168.0099	9792.1984
26	10116.0099	9760.1985
27	10116.0157	9760.1985
28	10052.0157	9760.1870
29	10052.0021	9836.1870
30	10044.0021	9836.1855
31	10043.9911	9897.5189
32	10115.9910	9897.5318
33	10115.9968	9865.5318
34	10063.3074	9955.5225
35	10064.9805	9955.5228
36	10193.3520	9684.2123
37	10118.9902	9902.5323
38	10163.9761	9979.5408

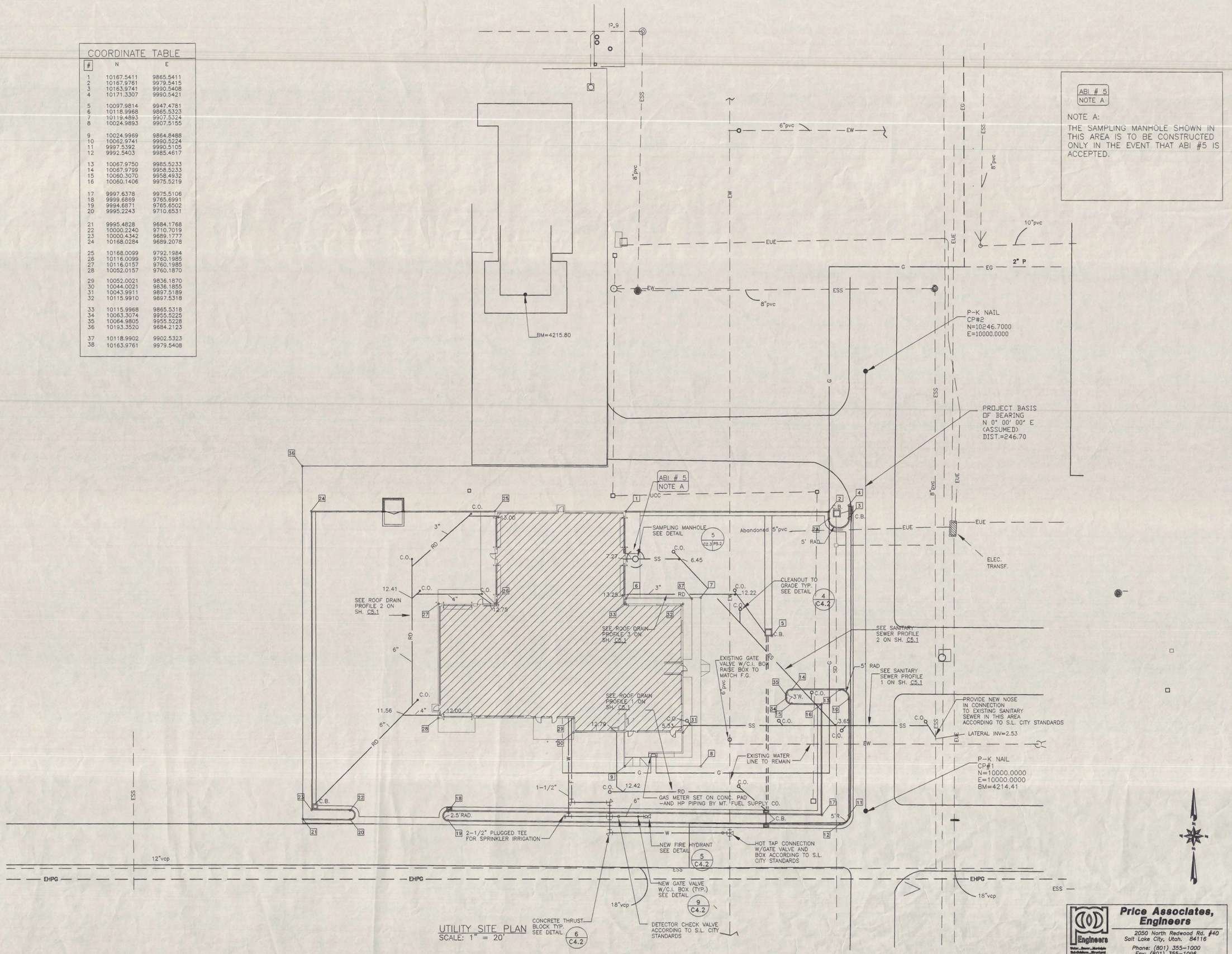

UTILITY SITE PLAN
SCALE: 1" = 20'

ABI # 5
NOTE A

NOTE A:
THE SAMPLING MANHOLE SHOWN IN THIS AREA IS TO BE CONSTRUCTED ONLY IN THE EVENT THAT ABI #5 IS ACCEPTED.

REFERENCE NOTES

GENERAL NOTES

LEGEND

—SS—	NEW SANITARY SEWER
—RD—	NEW ROOF DRAIN
—W—	NEW WATER PIPING
—F—	NEW FIRE LINE
—G—	NEW GAS LINE
—ESS—	EXISTING SANITARY SEWER
—EUE—	EXISTING UNDERGROUND ELEC.
—EW—	EXISTING WATER
—EHPG—	EXISTING HIGH PRESSURE GAS
—EG—	EXISTING GAS
—UCC—	UNDERGROUND COMUNICATION
—SD—	EXISTING STORM DRAIN

AIR NATIONAL GUARD
CIVIL ENGINEERING

UTAH AIR NATIONAL GUARD BASE

785 NORTH 2200 WEST
SALT LAKE CITY, UTAH
84116-2999

UTILITY SITE PLAN

Price Associates, Engineers
2050 North Redwood Rd. #40
Salt Lake City, Utah. 84116
Phone: (801) 355-1000
Fax: (801) 355-1096

REGISTERED PROFESSIONAL ENGINEER
No. 143441
TERRY R PRICE
STATE OF UTAH

ELECTRONIC SECURITY SQUADRON FACILITY – UTAH AIR NATIONAL GUARD
PROJ. NO. USEB 939661

FFKR Architects Planners II
132 Pierpont Ave. Suite 200
Salt Lake City, Utah 84101
Telephone 801 521-6186

DATE: APRIL 1, 1996
REVISED:
DRAWN BY: COP
DRAWING NO: C2.3

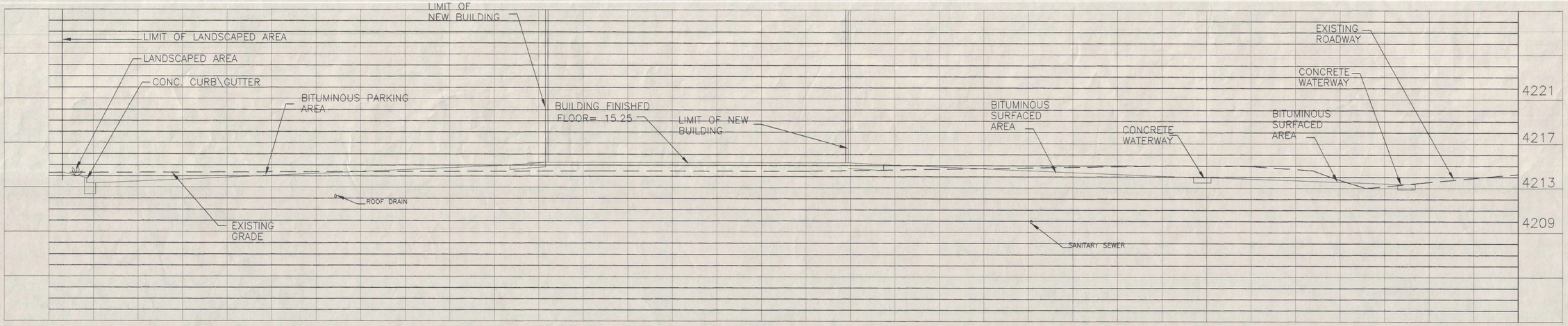

SECTION A THRU SITE (A / C3.1)
SCALE: HORIZINTAL 1" = 10'
SCALE: VERTICAL 1" = 4'

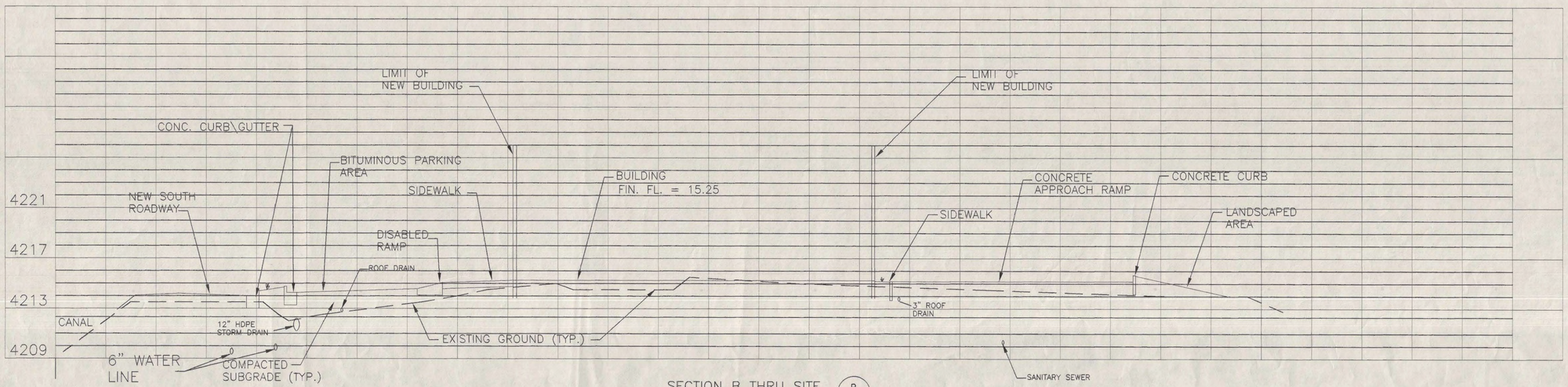

SECTION B THRU SITE (B / C3.1)
SCALE: HORIZINTAL 1" = 10'
SCALE: VERTICAL 1" = 4'

REFERENCE NOTES

GENERAL NOTES

LEGEND

AIR NATIONAL GUARD
CIVIL ENGINEERING

UTAH AIR NATIONAL GUARD BASE
785 NORTH 2200 WEST
SALT LAKE CITY, UTAH
84116-2999

SECTIONS THRU SITE

Price Associates, Engineers
2050 North Redwood Rd. #40
Salt Lake City, Utah. 84116
Phone: (801) 355-1000
Fax: (801) 355-1096

REGISTERED PROFESSIONAL ENGINEER
No. 143441
TERRY K PRICE
STATE OF UTAH

ELECTRONIC SECURITY SQUADRON FACILITY – UTAH AIR NATIONAL GUARD
PROJ. NO. USEB 939661

FFKR Architects Planners //
132 Pierpont Ave. Suite 200
Salt Lake City, Utah 84101
Telephone 801 521-6186

DATE: APRIL 1, 1996
REVISED:
DRAWN BY: CDP
DRAWING NO: C3.1

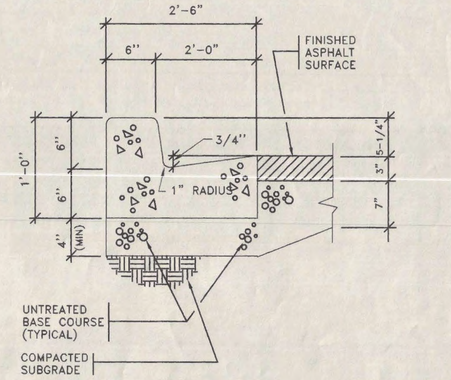

CONCRETE CURB/GUTTER
NO SCALE
1 C4.1

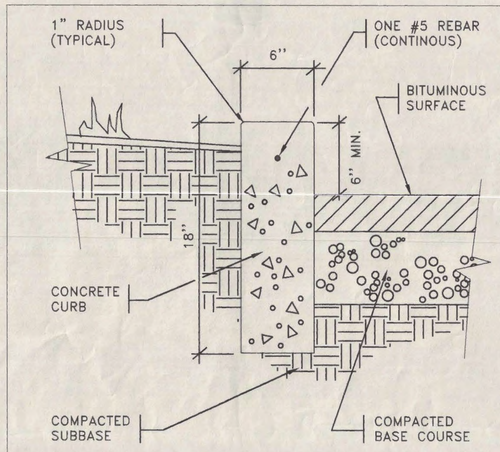

CONCRETE CURB
NO SCALE
2 C4.1

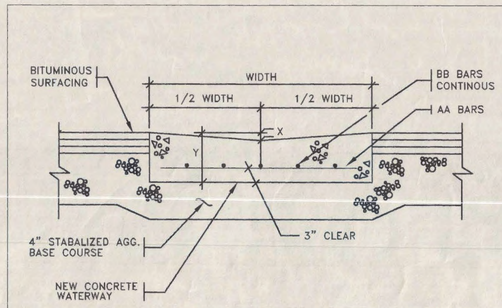

WATERWAY SCHEDULE				
WATERWAY WIDTH	AA BARS	BB BARS	"Y"	"X"
3 FT.	#3@36"	3-#4	6 1/2"	1"
4 FT.	#3@36"	4-#4	7"	1 1/4"
5 FT.	#3@36"	4-#4	7 1/2"	1 1/2"
6 FT.	#3@36"	5-#4	7 1/2"	1 3/4"

CONCRETE WATERWAY
NO SCALE
3 C4.1

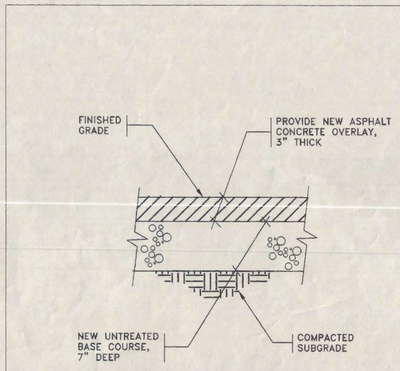

PAVEMENT SECTION
NO SCALE
4 C4.1

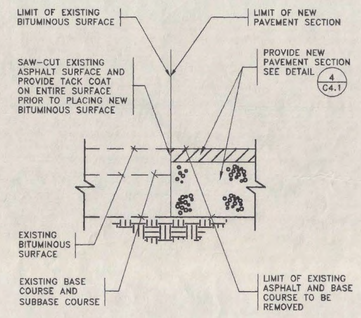

NEATLINE SAW-CUT
NO SCALE
5 C4.1

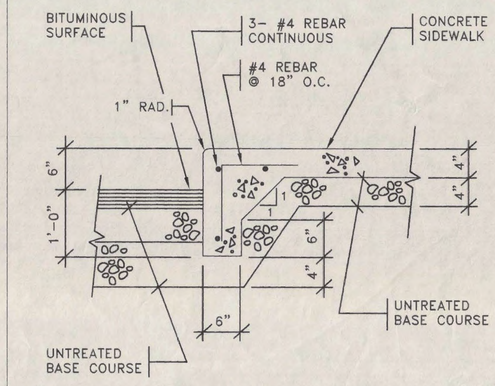

RAISED SIDEWALK EDGE BEAM
NO SCALE
6 C4.1

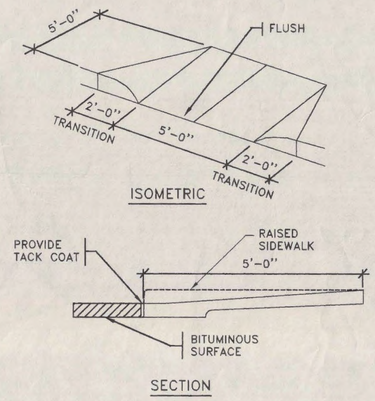

DISABLED RAMP IN SIDEWALK
NO SCALE
7 C4.1

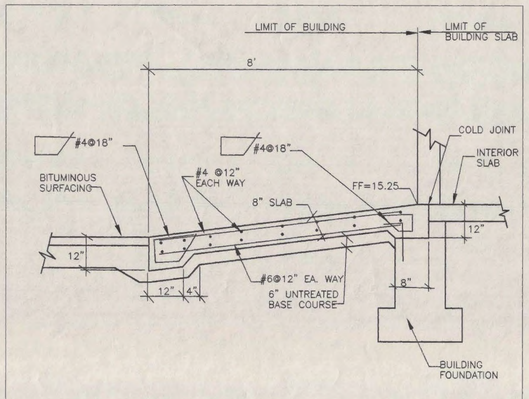

CONCRETE APRON
NO SCALE
8 C4.1

NOT USED
NO SCALE
9 C4.1

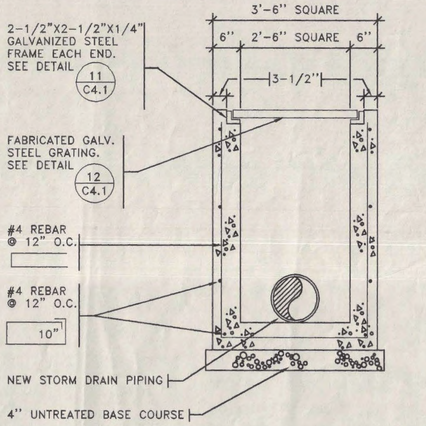

AREA CATCH BASIN
NO SCALE
10 C4.1

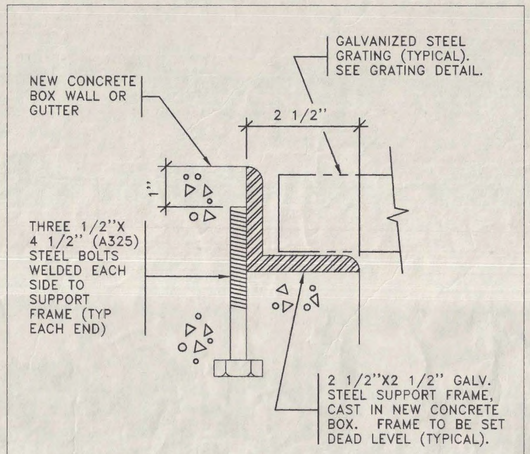

GRATING SUPPORT
NO SCALE
11 C4.1

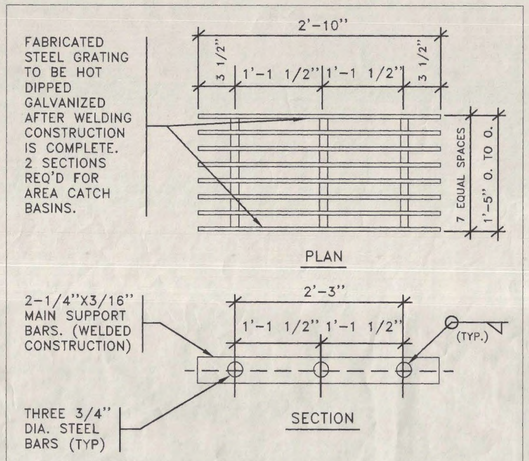

GRATING DETAIL
NO SCALE
12 C4.1

REFERENCE NOTES

GENERAL NOTES

LEGEND

AIR NATIONAL GUARD
CIVIL ENGINEERING

UTAH AIR NATIONAL GUARD BASE
785 NORTH 2200 WEST
SALT LAKE CITY, UTAH
84116-2969

DETAILS

Price Associates, Engineers
2050 North Redwood Rd. #40
Salt Lake City, Utah. 84116
Phone: (801) 355-1000
Fax: (801) 355-1096

No. 143441 TERRY R PRICE REGISTERED PROFESSIONAL ENGINEER STATE OF UTAH

ELECTRONIC SECURITY SQUADRON FACILITY – UTAH AIR NATIONAL GUARD
PROJ. NO. USEB 939661

FFKR Architects Planners II
132 Pierpont Ave. Suite 200
Salt Lake City, Utah 84101
Telephone 801 521-6186

DATE: APRIL 1, 1996
REVISED:
DRAWN BY: COP
DRAWING NO: C4.1

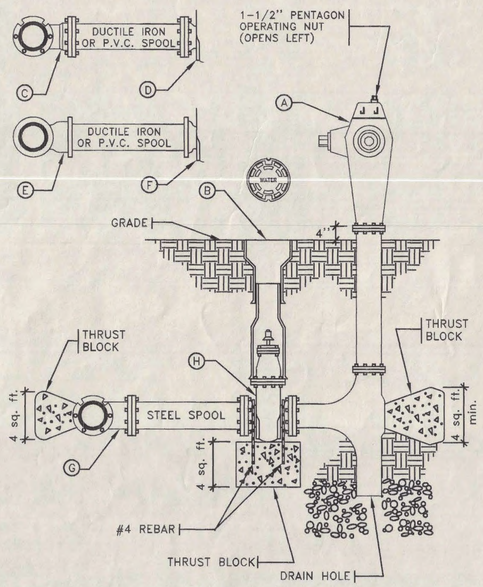

LEGEND		
ITEM	DESCRIPTION	
(A)	FIRE HYDRANT	AWWA APPROVED DRY BARREL
(B)	2 PIECE CAST IRON VALVE BOX	TYLER 6850 OR EQUAL
(C)	MECH. JOINT TEE W/ACCESSORIES	
(D)	GATE VALVE W/2"X2" OPERAT. NUT	MJ X FLG OR EQUAL
(E)	TYTON JOINT TEE	
(F)	GATE VALVE W/2"X2" OPERAT. NUT	MJ X FLG OR EQUAL
(G)	MJ OR TJ X FLANGE TEE	USE SLIP ON FLANGE W/STEEL
(H)	GATE VALVE W/2"X2" OPERAT. NUT	MJ X FLG OR EQUAL

FIRE HYDRANT
NO SCALE — 5 / C4.2

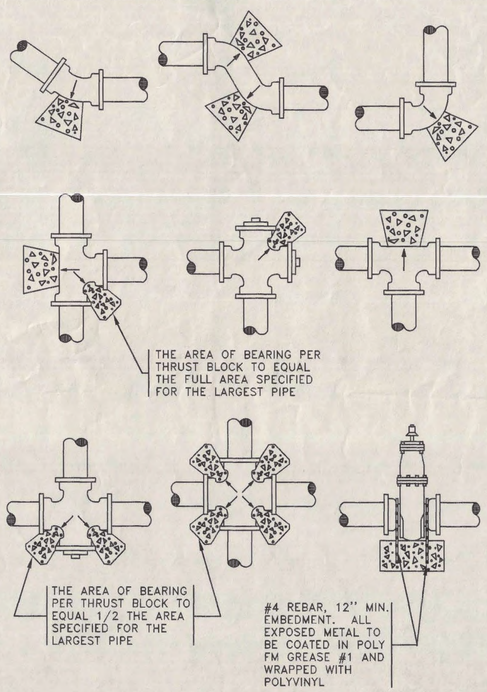

MINIMUM BEARING AREA IN SQUARE FT.					
SIZE OF PIPE	TEES, VAL. DEAD ENDS	90° BEND	45° BEND	22.5° BEND	11.25° BEND
4"	2	2	2	2	2
6"	3	4	3	2	2
8"	5	8	4	2	2
10"	8	12	6	4	3
12"	12	16	9	5	3
14"	19	26	14	7	4
16"	21	29	16	8	4

THRUST BLOCK
NO SCALE — 6 / C4.2

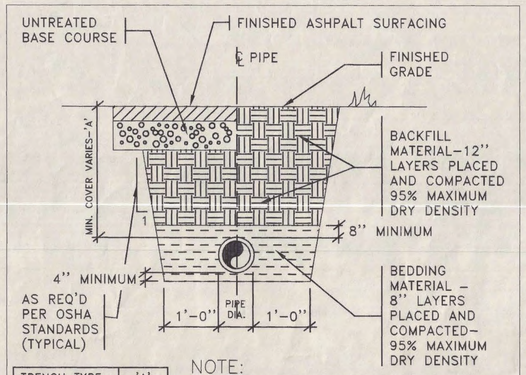

TRENCH TYPE	'A'
WATER	5'-0"
SEWER MIN.	4'-6"
STORM DRAIN	2'-6"

NOTE:
ALL TRENCH EXCAVATED EXISTING MATERIALS UNDER PAVEMENTS SHALL BE WASTED. CONTRACTOR SHALL PROVIDE UNTREATED BASE COURSE TRENCH BACKFILL AS REQUIRED TO REPLACE WASTED MATERIAL.

TYPICAL TRENCH
NO SCALE — 3 / C4.2

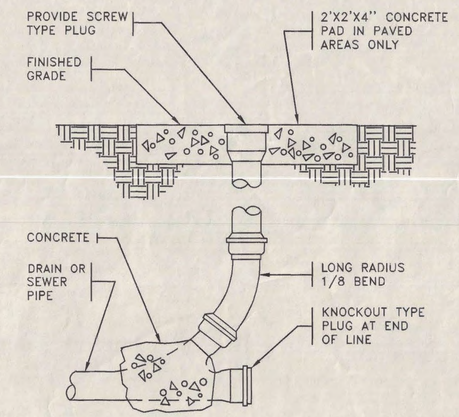

CLEAN-OUT TO GRADE
NO SCALE — 4 / C4.2

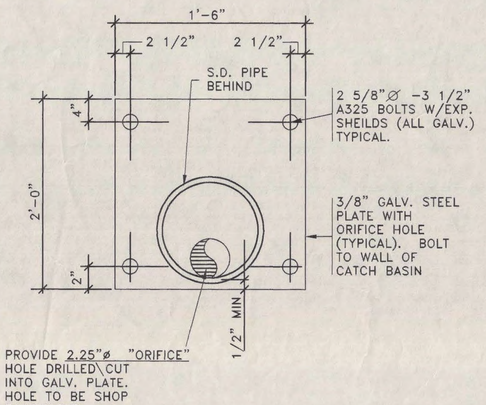

ORIFICE PLATE
NO SCALE — 7 / C4.2

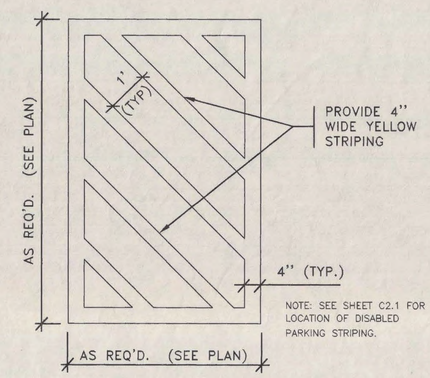

NOTE: SEE SHEET C2.1 FOR LOCATION OF DISABLED PARKING STRIPING.

PAINTED STRIPING
NO SCALE — 8 / C4.2

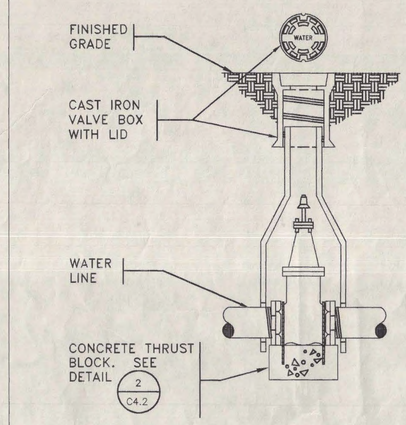

GATE VALVE W/C.I. BOX
NO SCALE — 9 / C4.2

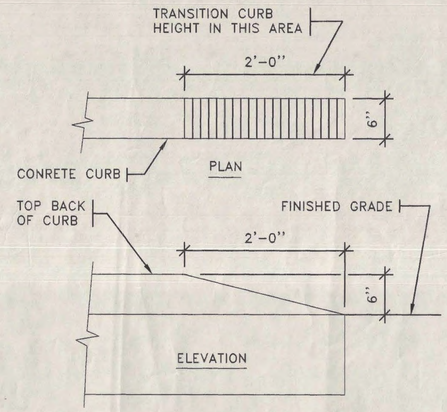

TERMINAL END
NO SCALE — 10 / C4.2

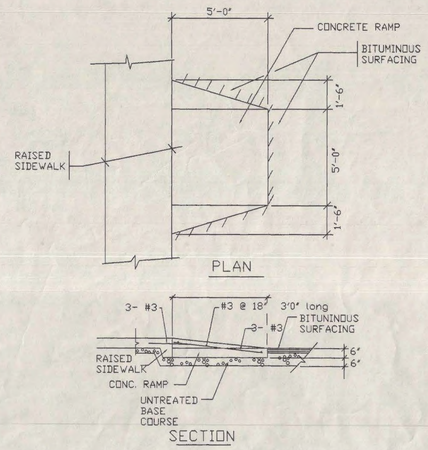

DISABLED RAMP DETAIL IN PARKING AREA
NO SCALE — 11 / C4.2

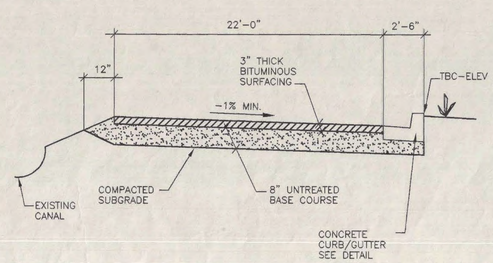

TYPICAL SECTION - SOUTH ROAD
NO SCALE — 12 / C4.2

REFERENCE NOTES

GENERAL NOTES

LEGEND

AIR NATIONAL GUARD CIVIL ENGINEERING

UTAH AIR NATIONAL GUARD BASE
785 NORTH 2200 WEST
SALT LAKE CITY, UTAH
84116-2999

DETAILS

Price Associates, Engineers
2050 North Redwood Rd. #40
Salt Lake City, Utah. 84116
Phone: (801) 355-1000
Fax: (801) 355-1096

REGISTERED PROFESSIONAL ENGINEER — No. 143441 — TERRY R PRICE — STATE OF UTAH

ELECTRONIC SECURITY SQUADRON FACILITY - UTAH AIR NATIONAL GUARD
PROJ. NO. USEB 939661

FFKR Architects Planners
132 Pierpont Ave. Suite 200
Salt Lake City, Utah 84101
Telephone 801 521-6186

DATE: APRIL 1, 1998
REVISED:
DRAWN BY: CDP
DRAWING NO: C4.2

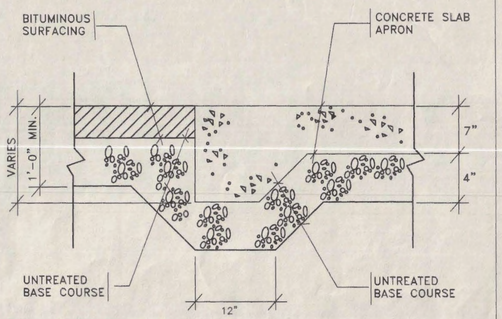

CONCRETE EDGEBEAM
NO SCALE
1 C4.3

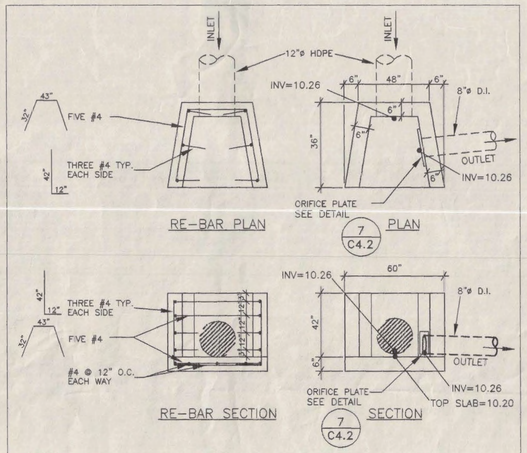

INLET STRUCTURE W/ORIFICE PLATE
NO SCALE
2 C4.3

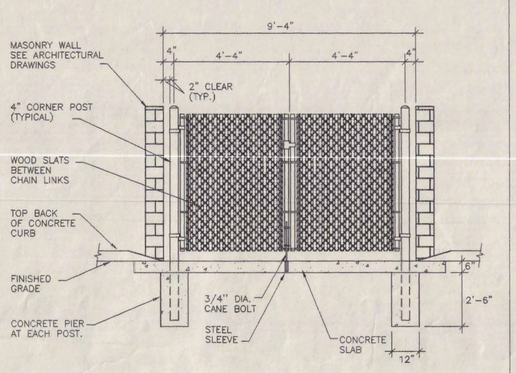

5' HIGH SWING GATE W/WOOD SLATS
NO SCALE
3 C4.3

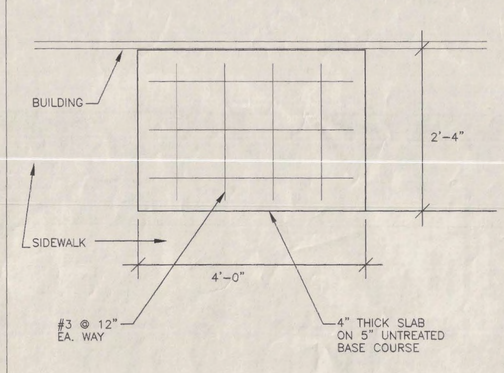

GAS PAD DETAIL
NO SCALE
4 C4.3

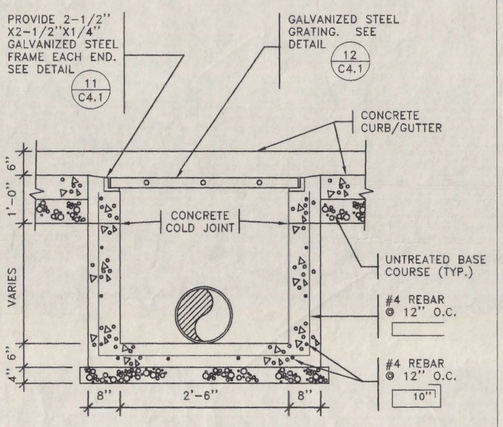

SECTION THROUGH BOX

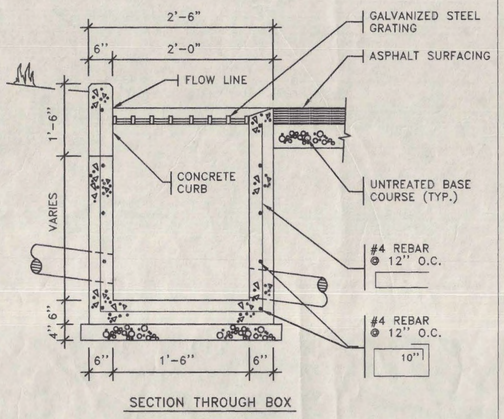

SECTION THROUGH BOX

SINGLE CURB INLET BOX
NO SCALE
9 C4.3

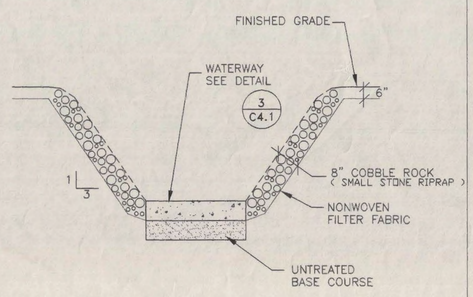

DETENTION BASIN DETAIL
NO SCALE
6 C4.3

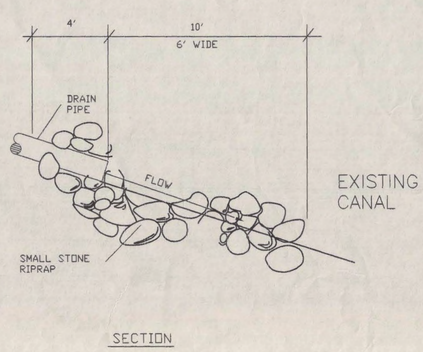

SECTION

RIPRAP AT PIPE END
NO SCALE
7 C4.3

NO SCALE
8 C4.3

NO SCALE
10 C4.3

NO SCALE
11 C4.3

NO SCALE
12 C4.3

REFERENCE NOTES

GENERAL NOTES

LEGEND

AIR NATIONAL GUARD CIVIL ENGINEERING

UTAH AIR NATIONAL GUARD BASE
785 NORTH 2200 WEST
SALT LAKE CITY, UTAH
84116-2999

DETAILS

Price Associates, Engineers
2050 North Redwood Rd. #40
Salt Lake City, Utah. 84116
Phone: (801) 355-1000
Fax: (801) 355-1096

REGISTERED PROFESSIONAL ENGINEER No. 143441 TERRY R PRICE STATE OF UTAH

ELECTRONIC SECURITY SQUADRON FACILITY – UTAH AIR NATIONAL GUARD
PROJ. NO. USEB 939661

FFKR Architects Planners II
132 Pierpont Ave. Suite 200
Salt Lake City, Utah 84101
Telephone 801 521-6186

DATE: APRIL 1, 1996
REVISED:
DRAWN BY: CJP

DRAWING NO: C4.3

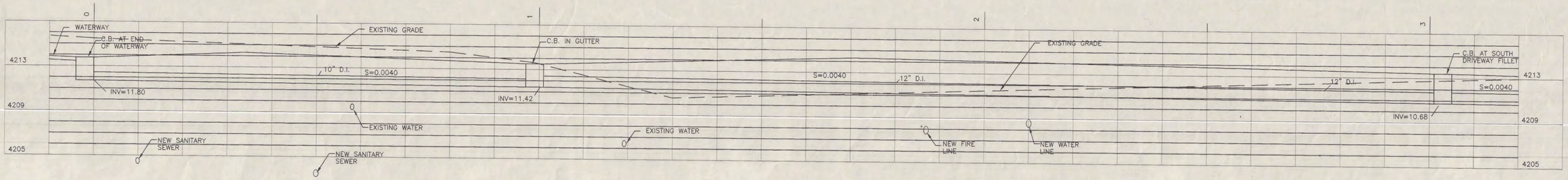

STORM DRAIN PIPING PROFILE
SCALE: HORIZINTAL 1" = 10'
SCALE: VERTICAL 1" = 4'

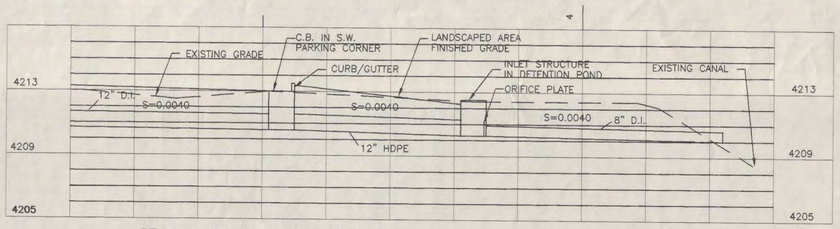

STORM DRAIN PIPING PROFILE CONT.
SCALE: HORIZINTAL 1" = 10'
SCALE: VERTICAL 1" = 4'

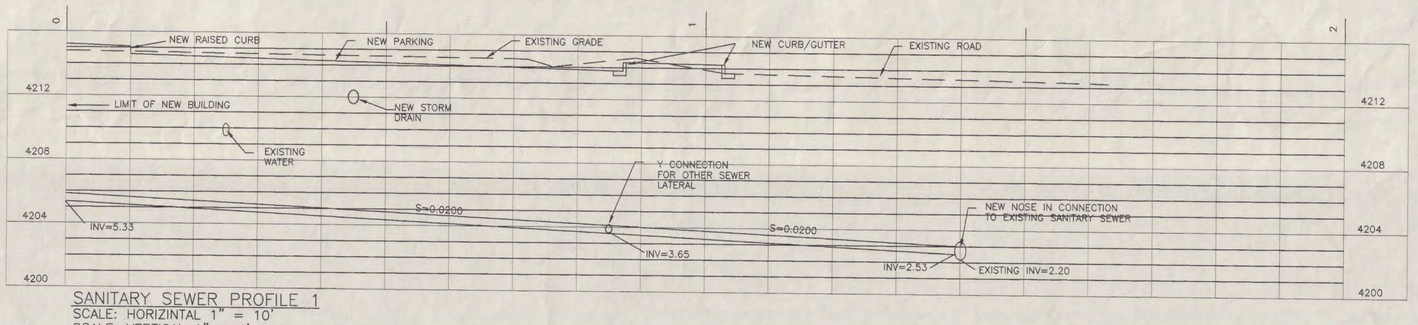

SANITARY SEWER PROFILE 1
SCALE: HORIZINTAL 1" = 10'
SCALE: VERTICAL 1" = 4'

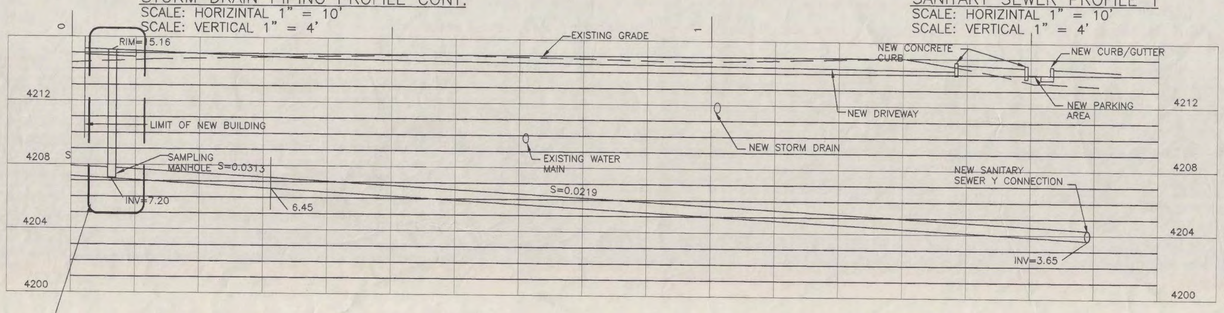

ABI # 5
NOTE A

SANITARY SEWER PROFILE 2
SCALE: HORIZINTAL 1" = 10'
SCALE: VERTICAL 1" = 4'

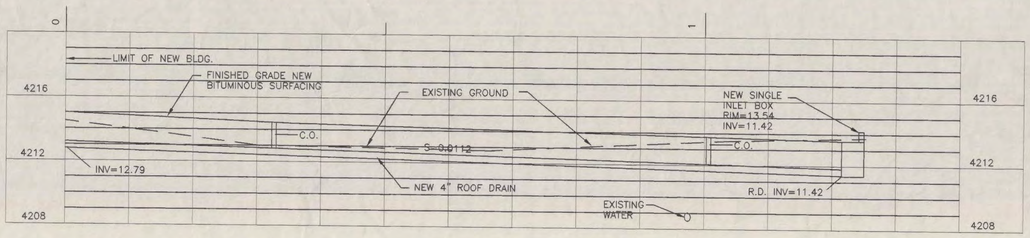

ROOF DRAIN PROFILE 1
SCALE: HORIZINTAL 1" = 10'
SCALE: VERTICAL 1" = 4'

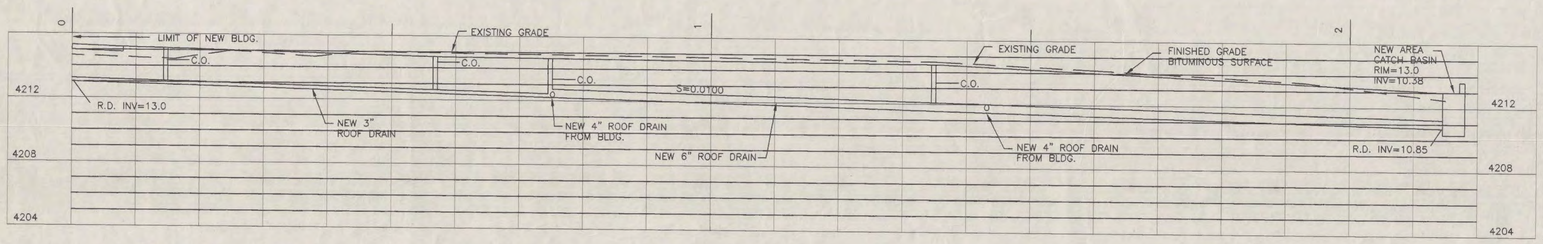

ROOF DRAIN PROFILE 2
SCALE: HORIZINTAL 1" = 10'
SCALE: VERTICAL 1" = 4'

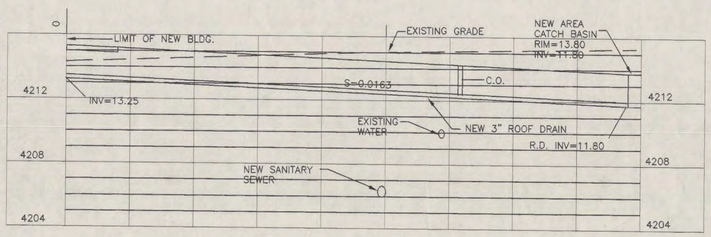

ROOF DRAIN PROFILE 3
SCALE: HORIZINTAL 1" = 10'
SCALE: VERTICAL 1" = 4'

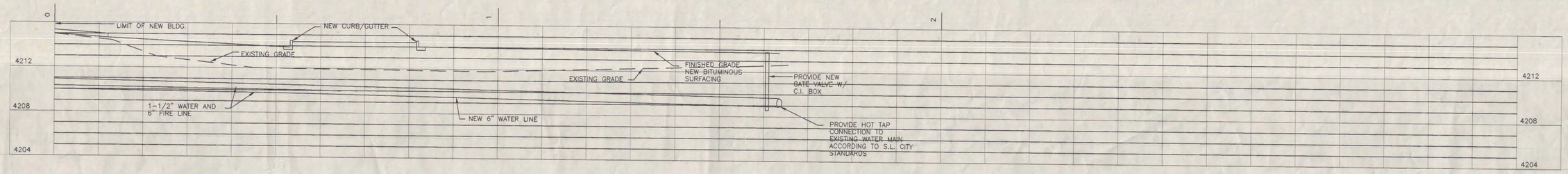

WATER LINE PROFILE
SCALE: HORIZINTAL 1" = 10'
SCALE: VERTICAL 1" = 4'

REFERENCE NOTES

NOTE A:
THE CONSTRUCTION OF THE SAMPLING MANHOLE SHOWN IN THIS PROFILE IS ONLY TO BE CONSTRUCTED IN THE EVENT THAT ABI #5 IS ACCEPTED.

GENERAL NOTES

LEGEND

AIR NATIONAL GUARD CIVIL ENGINEERING

UTAH AIR NATIONAL GUARD BASE
785 NORTH 2200 WEST
SALT LAKE CITY, UTAH
84116-2999

UTILITY PROFILES

Price Associates, Engineers
2050 North Redwood Rd. #40
Salt Lake City, Utah. 84116
Phone: (801) 355-1000
Fax: (801) 355-1096

REGISTERED PROFESSIONAL ENGINEER No. 143441 TERRY R PRICE STATE OF UTAH

ELECTRONIC SECURITY SQUADRON FACILITY – UTAH AIR NATIONAL GUARD
PROJ. NO. USEB 939661

FFKR Architects Planners II
132 Pierpont Ave. Suite 200
Salt Lake City, Utah 84101
Telephone 801 521-6186

DATE: APRIL 1, 1996
REVISED:
DRAWN BY: CDP
DRAWING NO: C5.1

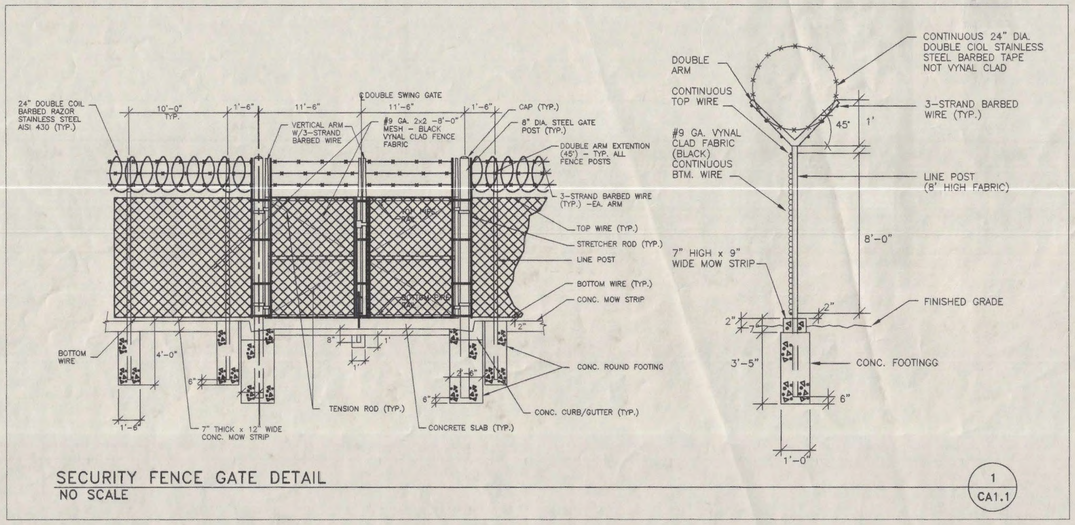

SECURITY FENCE GATE DETAIL
NO SCALE

1
CA1.1

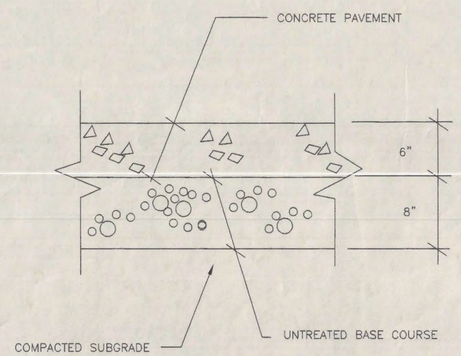

CONCRETE PAVEMENT
NO SCALE

3
CA1.1

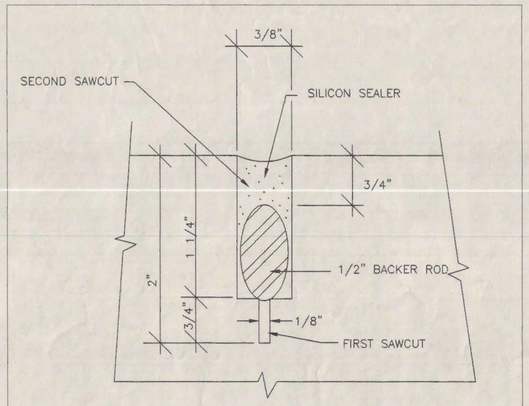

CONCRETE CONTROL JOINT DETAIL
NO SCALE

4
CA1.1

SECURITY FENCE NOTES

NOTE:

1. ALL FENCING MATERIALS SHALL BE VYNAL CLAD (BLACK) UNLESS OTHERWISE NOTED TO MATCH EXISTING ADJACENT AND CONNECTING FENCING
2. 8" GATE POST SHALL BE HEAVY STEEL PIPE (AISC)
3. LINE POSTS SHALL BE 2-3/8" DIA. 0.154 MIN. WALL THICKNESS FOR 8'-0" FENCING FABRIC
4. PROVIDE TOP AND BOTTOM WIRE CONTINUOUS
5. GATE RAILING/FRAME SHALL BE 1-3/4" PIPE - 0.140 THICKNESS MIN. PROVIDE STRAIGHT ARM AT GATE
6. ALL BRACKETS BOLTS AND CONNECTION NEEDED HARDWARE TO BE AS FENCIN MANUFACTURER RECOMMENDED TO MEET FEDERAL SECURITY FENCE STANDARDS
7. PROVIDE APPROVED GALV. LOCK CHAIN AND PADLOCK TO SECURE GATE

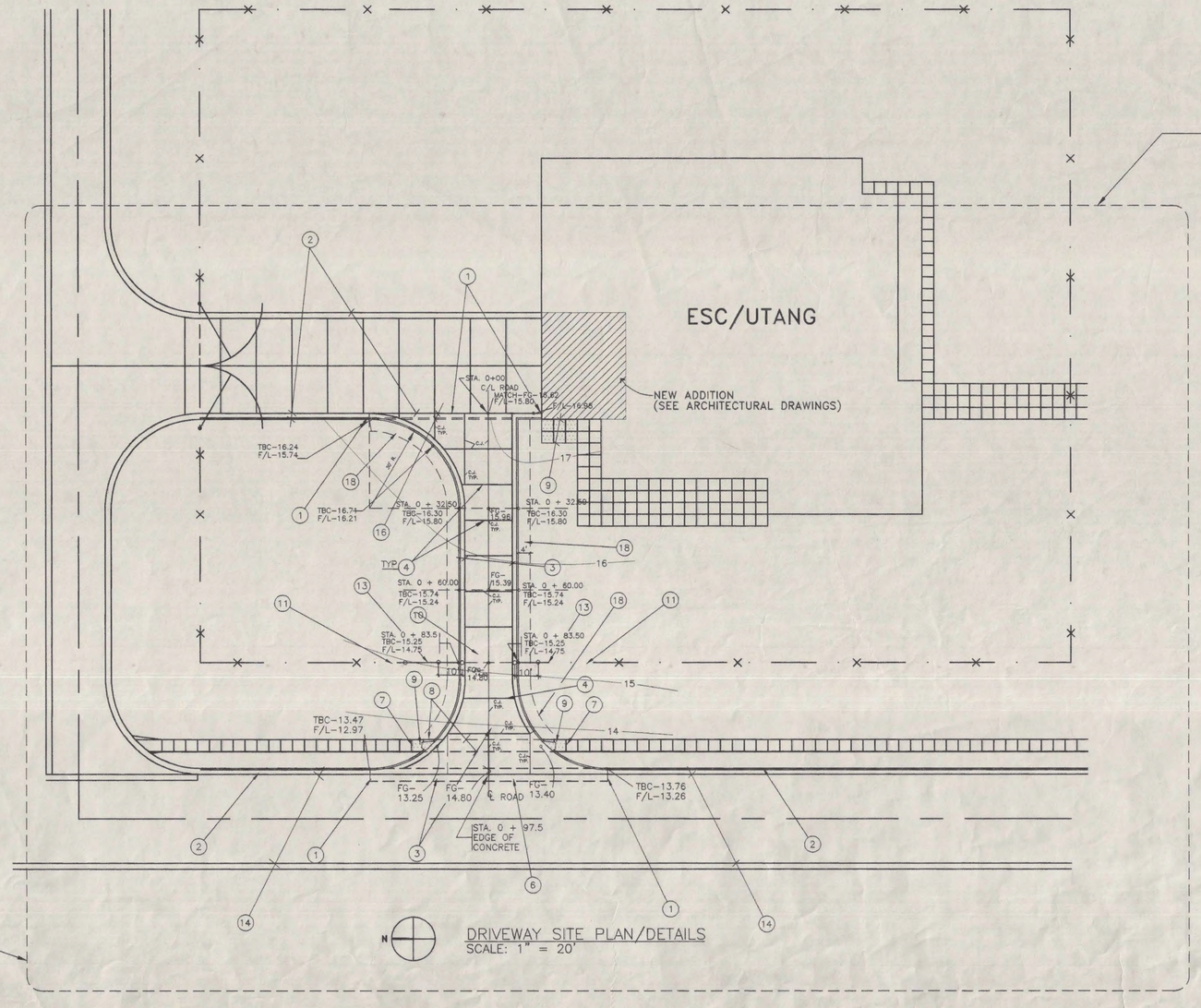

DRIVEWAY SITE PLAN/DETAILS
SCALE: 1" = 20'

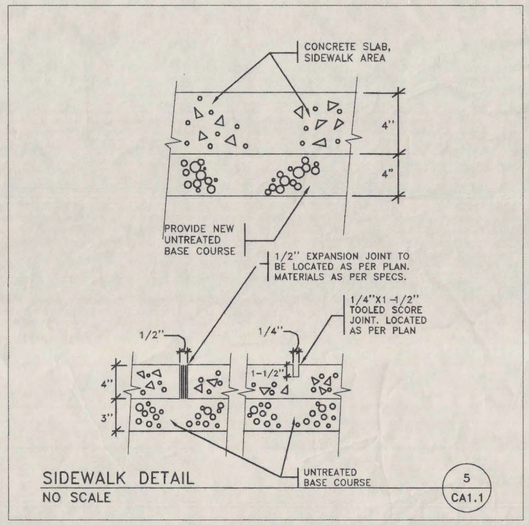

SIDEWALK DETAIL
NO SCALE

5
CA1.1

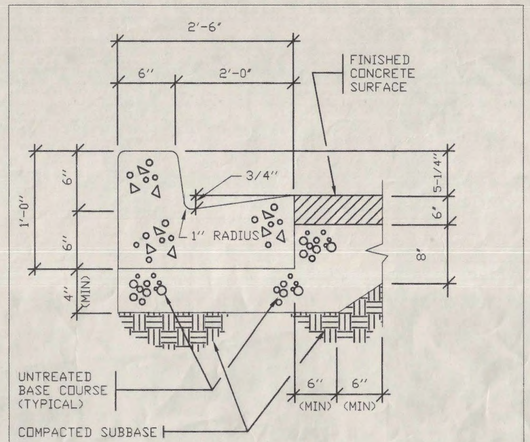

CONCRETE CURB/GUTTER
NO SCALE

6
CA1.1

REFERENCE NOTES

1. LIMIT OF NEW ROADWAY ACCESS CONSTRUCTION
2. EXISTING CONCRETE FEATURE TO REMAIN
3. PROVIDE NEW CONCRETE PAVEMENT - SEE DETAIL 3/CA1.1
4. CONCRETE CONTROL JOINT - SEE DETAIL 4/CA1.1
5. NEAT-LINE SAWCUT - SEE DETAIL 5/CA1.1
6. REMOVE AND REPLACE EXISTING BITUMINOUS SURFACING/UNTREATED BASE COURSE IN THIS AREA
7. LIMIT OF NEW SIDEWALK
8. REMOVE EXISTING SIDEWALK
9. PROVIDE NEW SIDEWALK IN THIS AREA
10. PROVIDE NEW DOUBLE SWING GATE/FENCING - SEE DETAIL 1/CA1.1
11. EXISTING SECURITY FENCE TO REMAIN
12. REMOVE EXISTING SECURITY FENCING IN THIS AREA
13. LIMIT OF EXISTING SECURITY FENCE TO BE REMOVED
14. EXISTING BITUMINOUS ROADWAY
15. SEE ARCHITECTURAL DRAWINGS
16. REMOVE EXISTING CONCRETE FEATURE IN THIS AREA
17. PROVIDE NEW CONCRETE CURB/GUTTER IN THIS AREA - SEE DETAIL 6/CA1.1
18. REMOVE AND REPLACE LANDSCAPED SOD AND REPAIR DISTURBED SPRINKLER SYSTEM IN THIS AREA SEE LANDSCAPE DRAWINGS

NOTE A: ALL SITE DEVELOPMENT CONSTRUCTION SHOWN ON THIS DRAWING CA1.1 SHALL ONLY BE CONSTRUCTED IN THE EVENT ABI # 1 IS ACCEPTED.

GENERAL NOTES

LEGEND

AIR NATIONAL GUARD CIVIL ENGINEERING

UTAH AIR NATIONAL GUARD BASE

785 NORTH 2200 WEST
SALT LAKE CITY, UTAH
84116-2999

DRIVEWAY SITE PLAN

Price Associates, Engineers
2050 North Redwood Rd. #40
Salt Lake City, Utah. 84116
Phone: (801) 355-1000
Fax: (801) 355-1096

REGISTERED PROFESSIONAL ENGINEER
No. 143441
TERRY R PRICE
STATE OF UTAH

ELECTRONIC SECURITY SQUADRON FACILITY - UTAH AIR NATIONAL GUARD
PROJ. NO. USEB 939661

FFKR Architects Planners
132 Pierpont Ave. Suite 200
Salt Lake City, Utah 84101
Telephone 801 521-6186

DATE: AUGUST 1995
REVISED:
DRAWN BY: GDP
DRAWING NO: CA1.1

EQUIPMENT SCHEDULE

UNIT NAME	UNIT NO.	FUNCTION	LOAD	VOLT	P	FLA	PRO DEV	RATING	PF	NO. SETS	WIRE NO.	WIRE SIZE	WIRE INSULATION	CONDUIT	START NOTE	REMARKS
AC-1	2	EVAP COOLER	5.00 HP	208	3	17.50	FI	20.00 FRN	0.85	1	3	#12	THHN/THWN	3/4	7A	
AH-1	1	AIR HANDLER	2.00 HP	208	3	7.80	CB	15.00	0.85	1	3	#12	THHN/THWN	3/4	9B	
AH-2	1	AIR HANDLER	15.00 HP	208	3	48.30	CB	90.00	0.85	1	3	#3	THHN/THWN	1-1/4	9B	
B-1	1	BOILER	1.00 HP	208	3	4.14	FI	4.50 FRN	0.85	1	3	#12	THHN/THWN	3/4	7A	
C-1	1	AIR COMPRESSOR	3.00 HP	208	3	11.00	FI	12.00 FRN	0.85	1	3	#12	THHN/THWN	3/4	7A	
CH-1	1	CHILLER	188.00 FLA	208	3	188.00	FI	250.00 FRN	0.85	1	3	#250	THHN/THWN	2 1/2	4A	
CP-1	1	CIRC. PUMP	0.25 HP	120	1	5.80	CB	20.00 FRN	0.85	1	2	#12	THHN/THWN	3/4	4A	
EF-1	1	EXHAUST FAN	4.40 FLA	120	1	4.40	CB	20.00 FRN	0.85	1	2	#12	THHN/THWN	3/4	4A	
EF-2	1	EXHAUST FAN	4.40 FLA	120	1	4.40	CB	20.00 FRN	0.85	1	2	#2	THHN/THWN	1	4A	
EF-3	1	EXHAUST FAN	4.40 FLA	120	1	4.40	CB	20.00 FRN	0.85	1	2	#12	THHN/THWN	3/4	4A	
EF-4	1	EXHAUST FAN	4.40 FLA	120	1	4.40	CB	20.00 FRN	0.85	1	2	#12	THHN/THWN	3/4	4A	
EF-5	1	EXHAUST FAN	1.50 HP	208	3	6.00	CB	15.00	0.85	1	3	#12	THHN/THWN	3/4	9B	
EF-6	1	EXHAUST FAN	1.50 HP	208	3	6.00	CB	15.00	0.85	1	3	#12	THHN/THWN	3/4	9B	
EF-7	1	EXHAUST FAN	4.40 FLA	120	1	4.40	CB	20.00	0.85	1	2	#12	THHN/THWN	3/4	4A	
FC-1	1	FAN COIL UNIT	4.40 FLA	120	1	4.40	CB	20.00	0.85	1	2	#12	THHN/THWN	3/4	4A	
P-1	1	PUMP	1.50 HP	208	3	5.98	FI	6.25 FRN	0.85	1	3	#12	THHN/THWN	3/4	7A	
P-2	1	PUMP	1.50 HP	208	3	5.98	FI	6.25 FRN	0.85	1	3	#12	THHN/THWN	3/4	7A	
P-3	1	PUMP	3.00 HP	208	3	11.00	FI	12.00 FRN	0.85	1	3	#12	THHN/THWN	3/4	7A	
P-4	1	PUMP	3.00 HP	208	3	11.00	FI	12.00 FRN	0.85	1	3	#12	THHN/THWN	3/4	7A	
UH-1	8	UNIT HEATER	2.80 FLA	120	1	2.80	CB	20.00	0.85	1	2	#12	THHN/THWN	3/4	4A	
WS-1	1	WATER SOFTNER	10.00 FLA	120	1	10.00	CB	20.00	0.85	1	2	#12	THHN/THWN	3/4	11A	
WH-1	1	WATER HEATER	2.00 FLA	120	1	2.00	CB	20.00	0.85	1	2	#12	THHN/THWN	3/4	11A	

STARTER NOTES

1 – NON-FUSED DISCONNECT SWITCH
2 – FUSED DISCONNECT SWITCH
3 – BREAKER IN ENCLOSURE
4 – MANUAL STARTER W/THERMAL OVERLOAD
5 – MAGNETIC STARTER
6 – MAGNETIC STARTER/NON-FUSED DISCONNECT COMBINATION
7 – MAGNETIC STARTER/FUSED DISCONNECT COMBINATION
8 – MAGNETIC STARTER/BREAKER COMBINATION
9 – VARIABLE FREOUENCY DRIVE
10 – REDUCED VOLTAGE STARTER
11 – DIRECT CONNECTION
12 – RECEPTACLE/SPECIAL PURPOSE OUTLET/ETC.
13 – TWO-SPEED STARTER, COORDINATE W/MOTAR TYPE

A – FURNISHED, INSTALLED, AND CONCECTED UNDER DIVISION 16
B – FURNISHED AND INSTALLED UNDER ANOTHER DIVISION REQUIRING CONNECTION UNDER DIVISION 16.
C – FURNISHED UNDER ANOTHER DIVISION BUT INSTALLED AND CONNECTED UNDER DIVISION 16.
D – FURNISHED, INSTALLED AND CONNECTED UNDER ANOTHER DIVISION.

PROTECTIVE DEVICES

CB = CIRCUIT BREAKER
FN = FUSE – NON INDUCTIVE LOAD
FI = FUSE – INDUCTIVE LOAD
MG = MAG GUARD

ABI #1
NOTE 2

FIXTURE SCHEDULE

TYPE	① MANUFACTURER	CATALOG NO.	MOUNTING	LAMPS
AA	LITHONIA	AF10296HO-120 ES	⟨1⟩ SUSPENDED	2-F96T12-CW-HO
A	PAL	AR9307-4-C-OP/PB-CBA-120-2-ELB	PENDANT AT	2-F032/835
B	LITHONIA	2PM3 GB 332 18 LS 120 SSB	LAY-IN	3-F032/835
C	LITHONIA	EJ 240 120 SSB	SURFACE	2-F032/835
D	LITHONIA	LB 232 A 120 SSB	SURFACE	2-F032/835
E	LITHONIA	AF10 348 HO-120 SSB	SUSPENDED +18'-0"	3-F48T12/835/HO
F	LITHONIA	AF 2/26QT 9MB 120 HPF	RECESSED	2-CF26DD/835
G	HI-TEK	TWH 400S 120 SF PE CBA	WALL AT 20'-0"	1-LU400
H	LITHONIA	SPF 232 FW A12.125 120 SSB LG	FLANGED	2-F032/835
J	LITHONIA	LG 9RW DOL	RECESSED	1-150WA21
K	LITHONIA	2SPG 232 A12.125 120 SSB	LAY-IN	2-F032/835
X1	LITHONIA	LES 1 R 120/277	UNIVERSAL	INCLUDED
X2	LITHONIA	LES 2 R 120/277	UNIVERSAL	INCLUDED
OA	LITHONIA	KAS 2 400S R3 120 SP12SF CBA PER PE1 SSA 25 6J DM 19 CBA	POLE	1-LU400

ABI #1
NOTE 2

ABI #3
NOTE 3

GENERAL NOTES

1. CONSULT ARCHITECTURAL REFLECTED CEILING PLANS FOR EXACT LOCATION AND QUANTITY OF ALL LIGHTING FIXTURES.
2. VERIFY ALL EQUIPMENT DIMENSIONS AND LOCATIONS BEFORE BEGINNING ROUGH-IN. CONSULT ALL APPLICABLE CONTRACT DRAWINGS AND SHOP DRAWINGS TO INSURE NEC CODE CLEARANCES REQUIRED AROUND ALL ELECTRICAL EQUIPMENT.
3. CONTRACTOR SHALL VERIFY ALL ELECTRICAL LOADS (VOLTAGE, PHASE, CONNECTION REOUIREMENTS, ETC.) OF EQUIPMENT FURNISHED UNDER DIVISION 15 WITH APPROVED MECHANICAL SHOP DRAWINGS BEFORE BEGINNING ROUGH-IN.
4. SEE SECTION 16510 OF THE SPECIFICATION FOR REQUIRED COORDINATION MEETINGS WITH MECHANICAL AND CEILING CONTRACTORS.
5. SEE APPLICABLE SHOP DRAWINGS FOR ROUGH-IN LOCATION OF ALL EQUIPMENT, WIRING DEVICES, ETC. WHERE APPLICABLE MOUNT ALL WIRING DEVICES ABOVE BACKSPLASH EXCEPT THOSE SERVING UNDER COUNTER EQUIPMENT.
6. SEE SPECIFICATION FOR ENERGY SAVING LAMP AND BALLAST REQUIREMENTS.
7. FINISHES OF ALL LIGHT FIXTURES SHALL BE SELECTED BY ARCHITECT.
8. THE ELECTRICAL CONTRACTOR SHALL NOTIFY AND COOPERATE WITH THE MECHANICAL CONTRACTOR SUCH THAT NO PIPING, DUCTS, OR EQUIPMENT FOREIGN TO THE OPERATION OF THE ELECTRICAL EQUIPMENT SHALL BE PERMITTED TO BE INSTALLED IN, ENTER OR PASS THRU ELECTRICAL ROOMS OR SPACES; OR ABOVE OR BELOW ELECTRICAL EQUIPMENT IN OTHER AREAS.
9. ELECTRICAL BOXES SHALL NOT BE LOCATED IN MASONRY COLUMNS IN BRICK WALLS OR IN GROUTED CELLS ADJACENT TO OPENINGS. COORDINATE LOCATION OF BOXES WITH MASONRY CONTRACTOR.
10. ALL PENETRATIONS OF FIRE RATED FLOORS, WALLS, AND CEILINGS SHALL BE SEALED WITH APPROVED MATERIAL TO MAINTAIN FIRE RATING OF SURFACE PENETRATED.

DEMOLITION NOTES

1. COORDINATE ALL NEW ELECTRICAL EQUIPMENT REQUIREMENTS AND MAKE CONNECTION TO EXISTING SYSTEMS. THIS INCLUDES LIGHTING, POWER, SIGNAL, RACEWAY, AND OTHER SYSTEMS INCLUDED UNDER DIVISION 16.
2. RELOCATE, REWIRE, AND/OR RECONNECT EXISTING ELECTRICAL DEVICES AND/OR EOUIPMENT THAT FOR ANY REASON OBSTRUCTS CONSTRUCTION.
3. CONCEAL ALL RACEWAY AND WIRING IN EXISTING WALLS, CEILINGS, FLOORS, ETC. EXCEPT WHERE THE USE OF SURFACE METAL RACEWAYS (E.G. WIREMOLD) IS INDICATED ON DRAWINGS OR IN SPEC.
4. LEAVE ALL EXISTING EQUIPMENT, IN PORTIONS OF THE BUILDING NOT BEING REMODELLED, IN WORKING CONDITION. RESTORE ALL INTERRUPTED BRANCH CIRCUITS, FEEDERS, ETC. TO WORKING CONDITION.
5. EXISTING RACEWAYS MAY BE REUSED (IN PLACE) WHERE POSSIBLE, AND WHERE IN COMPLIANCE WITH THE SPECIFICATIONS AND THE INTENT OF THE CONTRACT DOCUMENTS. INSURE INTEGRITY OF EXISTING RACEWAY BEFORE RE-USE.
6. REMOVE ALL RACEWAYS, CONDUCTORS, BOXES, DEVICES, EQUIPMENT, ETC. THAT ARE NOT TO BE RE-USED.
7. REMOVE EXISTING LIGHT FIXTURES WHICH ARE NOT TO BE REUSED, PLACE IN CARTON, LABEL APPROPRIATELY, AND RETURN TO CONTRACTING OFFICER.
8. DO NOT PENETRATE STRUCTURAL ELEMENTS OF FLOORS, WALLS, CEILINGS, ROOFS, ETC.
9. DISCONNECT AND RECONNECT ANY/ALL FIXTURES, DEVICES, EQUIPMENT, ETC. REQUIRED FOR PROPER COMPLETION OF THE WORK.

ABBREVATIONS

AC	ALTENATING CURRENT
A.F.F.	ABOVE FINISH FLOOR
AIC	AMPS INTERRUPTING CAPACITY
AM	AMP METER
AMP	AMPERE
ANN	ANNUNCIATOR
ATS	AUTOMATIC TRANSFER SWITCH
AUX	AUXILIARY
AWG	AMERICAN WIRE GUAGE
BC	BARE COPPER
BFG	BELOW FINISHED GRADE
C	CONDUIT
CAB	CABINET
CATB	COMMUNITY ANTENNA TELEVISION
CKT	CIRCUIT
CLG	CEILING
CNTR	CONTRACTOR
C.O.	CONDUIT ONLY
CRT	COMPUTER TERMINAL (CATHODE RAY TUBE)
CT	CURRENT TRANSFORMER
C/W	COMPLETE WITH
DB	DECIBEL
DWG	DRAWING
EG	EMERGENCY GENERATOR
EMT	ELECTRICAL METALIC TUBING
EX	EXPLOSION PROOF
FACP	FIREALARM CONTROL PANEL
FT	FOOT
GND	GROUND
GRC	GALVANIZED RIGID CONDUIT
HP	HORSE POWER
HZ	HERTZ
IMT	INTRMEDIATE METALIC CONDUIT
ISO	ISOLATED GROUND
J-BOX	JUNCTION BOX
KV	KILOVOLT
KVA	KILOVOLT AMPERES
KVAR	KILOVARS
KW	KILOWATT
LRA	LOCKED ROTOR AMPS
LTG	LIGHTING
MNF	MANUFACTURER
MATV	MASTER ANTENNA TELEVISION
MAX	MAXIMUM
MB	MAIN BUS
MCC	MOTOR CONTROL CENTER
MCM	1000 CIRCULAR MILLS
MH	MANHOLE
MIC	MICROPHONE
MIN	MINIMUM
MTR	MOUNTING
MTR	MOTOR
N/A	NOT APPLICABLE
NEC	NATIONAL ELECTRICAL CODE
NEMA	NATIONAL ELECTRICAL MANUFAC. ASSOC.
NFC	NATIONAL ELECTRICAL CODE
NFPA	NATIONAL FIRE PROTECTION ASSOC.
N.I.C.	NOT IN CONTRACT
NTS	NOT TO SCALE
OS & Y	OUTSIDE SCREW & YOKE (FIRE SPRINKLER RISER)
PB	PUSHBUTTON
PF	POWER FACTOR
PFR	PHASE FAILURE RELAY
PNL	PANEL
PT	POTENTIAL TRANSFORMER
PVC	POLYVINYL CHORIDE CONDUIT
RECEP	RECEPTACLE
REQ	REQUIREMENT
RLA	RATED LOAD AMPS
SE	SERVICE ENTRANCE
SPEC	SPECIFICATIONS
SPKR	SPEAKER
SS.	SELECTOR SWITCH
SW	SWITCH
SWBD	SWITCHBOARD
SWGR	SWITCHGEAR
TTB	TELEPHONE TERMINAL BOARD
TV	TELEVISION
TYP	TYPICAL
UP&L	UTAH POWER & LIGHT
V	VOLT (KV-KILOVOLT)
VAR	VOLT-AMPS/REACTIVE
VM	VOLT METER
W	WATTS
W/	WITH
WH	WATTHOUR METER
W/O	WITHOUT
WP	WEATHERPROOF
XFER SW	TRANSFER SWITCH
XFER	TRANSFORMER
1P	SINGLE-PHASE
2P	TWO-POLE
3P	THREE-POLE
4P	FOUR-POLE
Ø	PHASE

ELECTRICAL SYMBOL SCHEDULE

1. SEE FIXTURE SCHEDULE FOR TYPE, MOUNTING AND WATTAGE.
2. HEIGHT MEASURED TO CENTER LINE OF THE BOX FROM THE FINISHED FLOOR.
3. REFER TO DRAWINGS FOR DIRECTIONAL ARROWS.
4. SUBSCRIPT KEYS SWITCH TO FIXTURES CONTROLLED.
5. NEMA TYPE 'ND' NON-FUSED UNLESS NOTED 'F' (FUSED). USE 'HD' 480 V.
6. HEIGHT TO BE THE LOWER OF EITHER 80" A.F.F. OR 6" BELOW CEILING.
7. PROVIDE H.O.A. AND S.S. PUSHBUTTONS AS REQUIRED.
8. DOUBLE ARROWS DENOTE A DOUBLE FACE UNIT.
9. COORDINATE WITH SHOP DRAWINGS.
10. SUBSCRIPT DENOTES NEMA CONFIGURATION.
11. HEIGHT MEASURED TO BOTTOM OF THE BOX FROM FINISHED FLOOR.

STANDARD MOUNTING HEIGHT UNLESS OTHERWISE NOTED ON PLANS

SYMBOL	DESCRIPTION	MOUNTING HEIGHT	NOTES
	ONE CIRCUIT, TWO WIRE HOME RUN TO PANEL		
	2 CIRCUIT, 3 WIRE, COMMON NEUTRAL HOME RUN		
	3 CIRCUIT, 4 WIRE, COMMON NEUTRAL HOME RUN		
	CONDUIT RUN CONCEALED IN WALL OR CEILING		
	CONDUIT RUN CONCEALED IN FLOOR OR GROUND		
	CONDUIT UP		
	CONDUIT DOWN		
	CEILING LIGHT OUTLET	CEILING	1.
	WALL LIGHT OUTLET	AS NOTED	1.
	RECESSED INCANDESCENT OR H.I.D. FIXTURE	CEILING	1.
	FLUORESCENT LIGHT FIXTURE	AS NOTED	1
	FLUORESCENT EGRESS LIGHT FIXTURE	AS NOTED	UNSWITCHED
	CEILING MOUNTED EXIT LIGHT	CEILING	1.3.8.
	WALL MOUNTED EXIT LIGHT	AS NOTED	1.3.8.
$	SINGLE POLE SWITCH	+4'-0"	2.
$ a	SINGLE POLE SWITCH	+4'-0"	4. 2.
$3	THREE-WAY SWITCH	+4'-0"	2.
$4	FOUR-WAY SWITCH	+4'-0"	2.
$P	SWITCH WITH PILOT LIGHT	+4'-0"	2.
$T	THERMAL OVERLOAD SWITCH WITH PILOT LIGHT	+4'-0"	
	MOMENTARY CONTACT SWITCH	+4'-0"	2.
	TIMER SWITCH	+4'-0"	2.
	MOTION SENSOR		
	400 HZ 120VAC RECEPTACLE		11.VERIFY CONFIGURATION OWNER FURNISHED CONTRACTOR INSTALLED
	28 VOLT DC RECEPTACLE		11.VERIFY CONFIGURATION OWNER FURNISHED CONTRACTOR INSTALLED
	DUPLEX RECEPTACLE	+16"	11.
A	DUPLEX RECEPTACLE		9.
W	ELECTRIC WATER COOLER RECEPTACLE		SEE DETAIL
WP	WEATHERPROOF RECEPTACLE	+24"	
IG	ISOLATED GROUND RECEPTACLE	+16"	11.
	GROUND FAULT INTERRUPTER DUPLEX RECEPTACLE	+16"	9. 11.
	FOURPLEX RECEPTACLE	+16"	9. 11.
S	TRANSIENT VOLTAGE SURGE SUPPRESSOR RECEPTACLE	+16"	
S IG	TRANSIENT VOLTAGE SURGE SUPPRESSOR RECEPTACLE WITH ISOLATED GROUND	+16"	
	FLOOR OUTLET WITH 20A DEVICE	FLOOR	
	SPECIAL PURPOSE OUTLET	+16" OR AS NOTED	10. WITH CAP. 11.
	CORD DROP		SEE DETAIL
	PLUGMOLD	+46" OR AS NOTED	WIREMOLD G4000 SERIES
	TELEVISION OUTLET	+16"	4" SQUARE J-BOX 11.
	DATA OUTLET	+16"	11.
	TELEPHONE OUTLET	+16"	11.
	TELEPHONE OUTLET	FLOOR	
J	JUNCTION BOX ('F' IN FLOOR)	AS NOTED	
	MOTOR OUTLET	TO SUIT EQUIP.	
P	PHOTO-ELECTRIC CONTROL	AS NOTED	
T	TIME CLOCK	+5'-0"	
	PUSHBUTTON	+4'-6"	
	NON-FUSED DISCONNECT SWITCH	+5'-0"	5.
F	FUSED DISCONNECT SWITCH	+5'-0"	5.
	MAGNETIC STARTER	+5'-0"	7.
	MAGNETIC STARTER / NON-FUSED DISCONNECT COMBINATION	+5'-0"	7.
	MAGNETIC STARTER / FUSED COMBINATION	+5'-0"	7.
	MAGNETIC STARTER / BREAKER COMBINATION	+5'-0"	7.
	PANEL BOARD	TOP AT +6'-0"	
	MAIN DISTRIBUTION PANEL		
	TELEPHONE TERMINAL BOARD		
F	FIRE ALARM MANUAL STATION	+4'-0"	2.
H	FIRE ALARM SIGNAL HORN/PROJECTORS	+6'-8"	6.
H	FIRE ALARM SIGNAL HORN/STROBE	+6'-8"	6.
S	SMOKE DETECTOR	CEILING	
D	DUCT SMOKE DETECTOR		MTD. IN DUCT
H	HEAT DETECTOR	CEILING	
	DOOR HOLDER	AS NOTED	
FS	FLOW SWITCH		
TS	TAMPER SWITCH		
D	DURESS PUSHBUTTON	+4'-6"	
D	SECURITY SYSTEM DOOR SWITCH	DOOR JAMB	
D 1	SECURITY SYSTEM OVERHEAD SWITCH	AS NOTED	
G	SECURITY SYSTEM GLASS BREAK SWITCH	CEILING	MOUNT AS PER. MAN
K	SECURITY SYSTEM KEY PAD	+4'-0"	
I	INFRARED SENSOR	AS NOTED	
M	MOTION DETECTOR		MOUNT AS PER. MAN
S	ELECTRIC DOOR STRIKE		
BMS	BALANCED MAGNETIC DOOR SWITCH		
ODS	BALANCED MAGNETIC OVERHEAD DOOR SWITCH		
	CCTV CAMERA		
	SOUND SYSTEM SPEAKER OUTLET	+8'-0" OR AS NOTED	
IC	INTERCOM OUTLET	AS NOTED	
V	VOLUME CONTROL	+4'-0"	
M	MICROPHONE OUTLET	+16"	
M	MICROPHONE FLOOR OUTLET	FLOOR	
	SOUND EQUIPMENT CABINET		CIRCUIT TO 120V
AMP	SOUND EQUIPMENT AMPLIFIER		CIRCUIT TO 120V
REC	RECORDER		
842	ARCHITECTURAL ROOM NUMBER		
A	LIGHT FIXTURE (LETTER DESIGNATES TYPE)		
EQ 34	EQUIPMENT NUMBER		
S	FIRE/SMOKE DAMPER		

REFERENCE NOTES

⟨1⟩ MOUNTING HIEGHT TO MATCH EXISTNG.

GENERAL NOTES

① THE FOLLOWING LIST OF MANUFACTURERS IS INTENDED TO BE DESCRIPTIVE. BUT NOT RESTRICTIVE. THE LIST IS INDICATING MINIMUM QUALITY AND CHARACTERISTICS SUBJECT TO COMPLIANCE WITH CONTRACT REQUIREMENTS. THIS LIST IS NOT ALL INCLUSIVE AND THE GOVERNMENT IS NOT WARRANTING EXCLUSIVE USE OF THESE PRODUCTS. THE CONTRACTOR MAY PROPOSE ANY AVAILABLE PRODUCT THAT COMPLIES WITH THE CONTRACT REQUIREMENTS.

② LIGHT FIXTURE SHALL BE BID AS PART OF ALTERNATE BID ITEM NO. 1.

③ LIGHT FIXTURE SHALL BE BID AS PART OF ALTERNATE BID ITEM NO. 3.

LEGEND

UTAH AIR NATIONAL GUARD BASE

785 NORTH 2200 WEST
SALT LAKE CITY, UTAH
84116-2999

SCHEDULES AND NOTES

DATE: APRIL 1, 1996
REVISED:
DRAWN BY: BNA
DRAWING NO: **E0.1**

BNA Consulting Engineers
146 Pierpont Avenue
Salt Lake City, Utah 84101
(801) 532-2196
FAX# (801) 532-2305

ELECTRONIC SECURITY SQUADRON FACILITY - UTAH AIR NATIONAL GUARD
PROJ. NO. USEB 939661

FFKR Architects Planners II
132 Pierpont Ave. Suite 200
Salt Lake City, Utah 84101
Telephone 801 521-6186

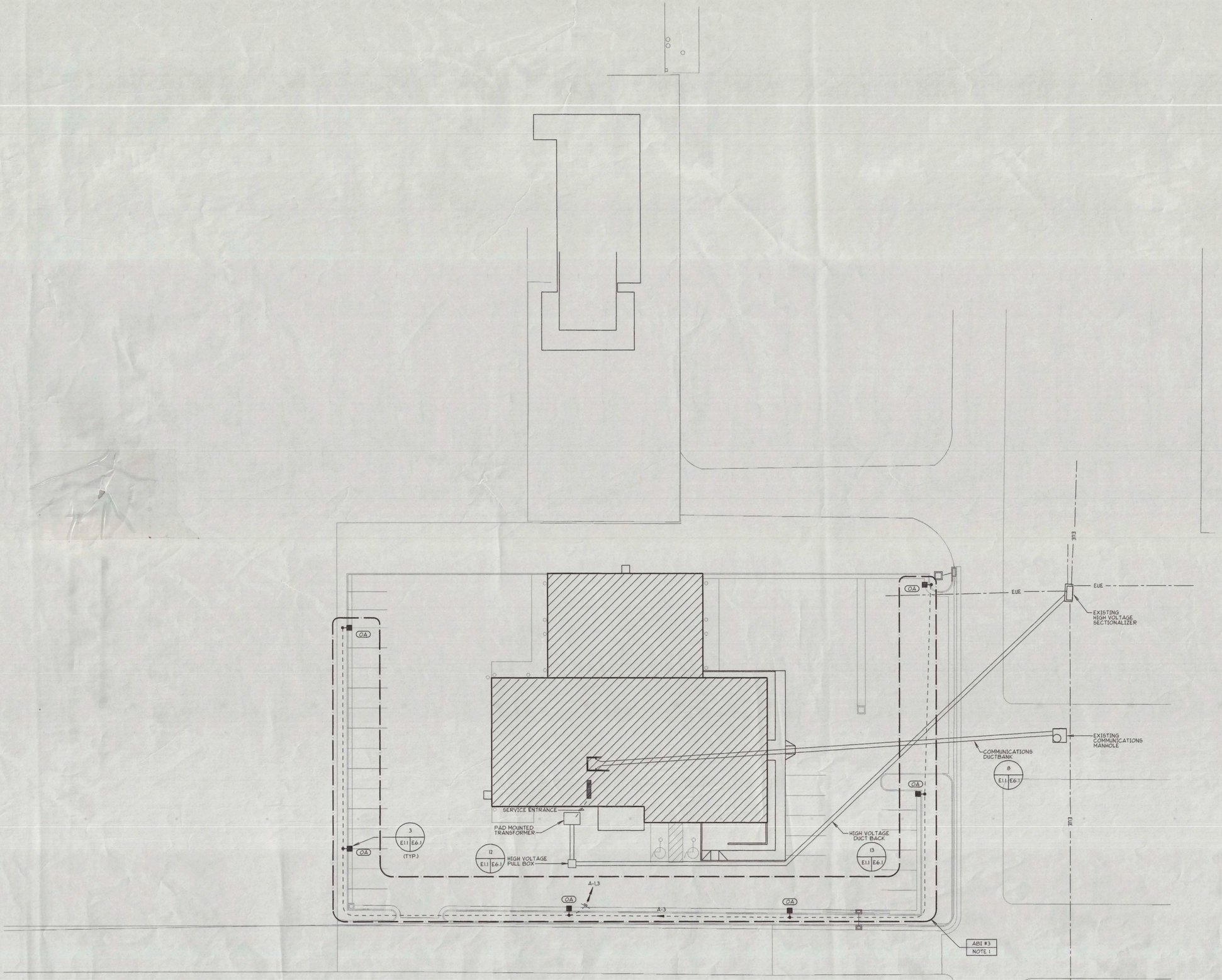

ELECTRICAL SITE PLAN

SCALE: 1" = 20'-0"

REFERENCE NOTES

GENERAL NOTES

1. EXTERIOR POLE MOUNTED FIXTURES TO INCLUDE LIGHT FIXTURES, POLES, CONCRETE BASES AND BRANCH CIRCUIT WIRING SHALL BE PRICED AS ALTERNATE BID ITEM NO. 3. PRICING TO INCLUDE ALL MATERIALS, TRENCHING, BACK-FILLING, AND LABOR IN ORDER TO PROVIDE A COMPLETE AND OPERATIONAL SYSTEM.

LEGEND

(EUE) EXISTING UNDERGROUND ELECTRICAL LINE.

AIR NATIONAL GUARD CIVIL ENGINEERING

UTAH AIR NATIONAL GUARD BASE

785 NORTH 2200 WEST
SALT LAKE CITY, UTAH
84116-2999

REGISTERED PROFESSIONAL ENGINEER ROBERT J. BECKERBAK No. 4222 STATE OF UTAH

SITE PLAN

BNA Consulting Engineers
146 Pierpont Avenue
Salt Lake City, Utah 84101
(801) 532-2196
FAX# (801) 532-2305

ELECTRONIC SECURITY SQUADRON FACILITY - UTAH AIR NATIONAL GUARD
PROJ. NO. USEB 939661

FFKR Architects Planners II
132 Pierpont Ave. Suite 200
Salt Lake City, Utah 84101
Telephone 801 521-6186

DATE: APRIL 1, 1996
REVISED:
DRAWN BY: BNA
DRAWING NO: E1.1

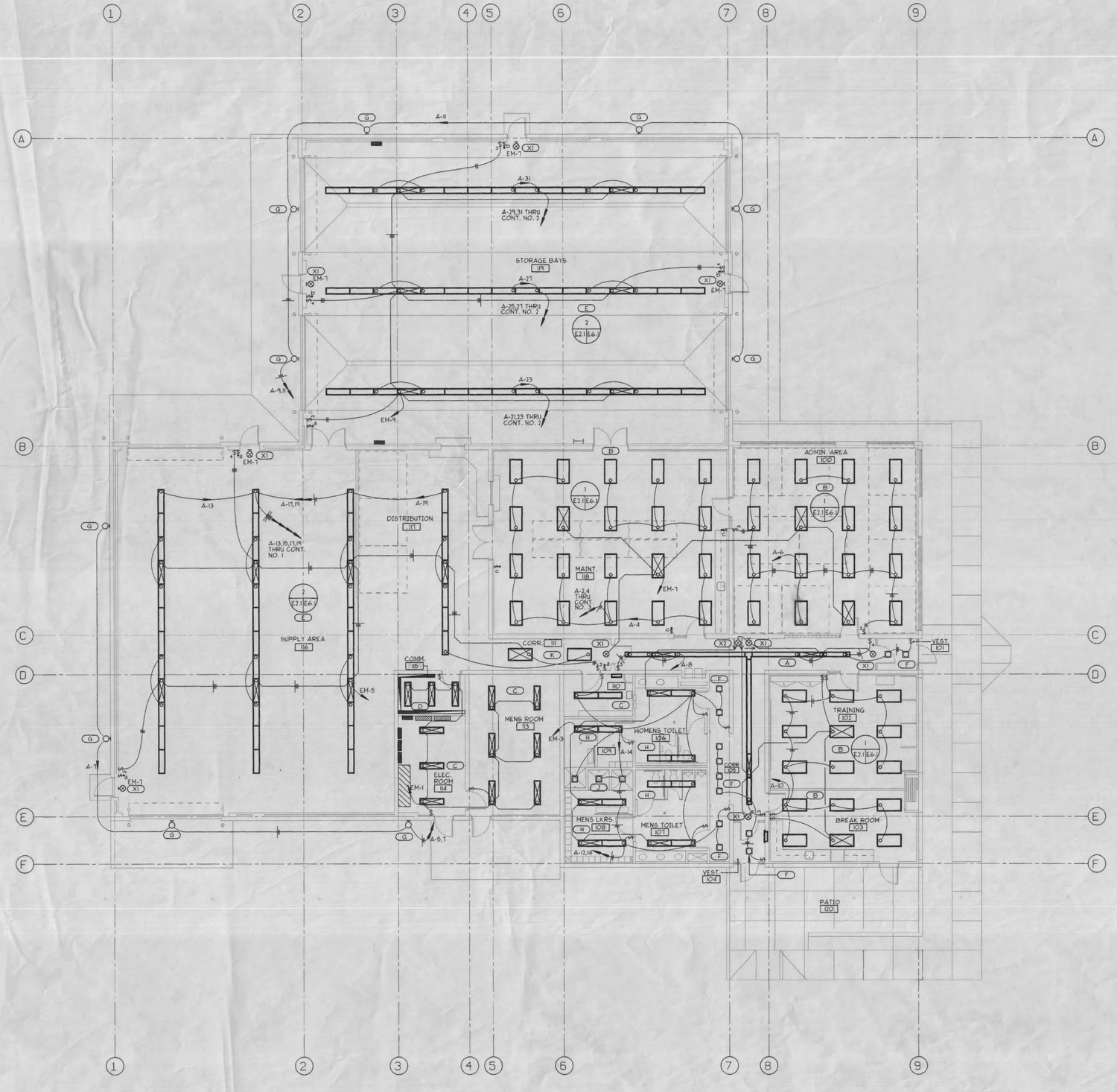

CONTACTOR SCHEDULE

CONTACTOR #	CIRCUITS CONTROLLED	CONTACTOR SIZE	CONTACTOR PANEL	CONTROL
1	A-13,15,17,19	30A-5P	PANEL A EXTENSION	$\frac{3}{3}$ a
2	A-21,23,25,27,29,31	30A-8P	PANEL A EXTENSION	$\frac{3}{3}$ b
3	A-2,4	30A-3P	PANEL A EXTENSION	$\frac{3}{3}$ c

LIGHTING PLAN

SCALE: 1/8" = 1'-0"

REFERENCE NOTES

GENERAL NOTES

① PROVIDE MECHANICALLY HELD CONTACTOR FOR CONTROL OF CIRCUITS INDICATED.

LEGEND

AIR NATIONAL GUARD CIVIL ENGINEERING

UTAH AIR NATIONAL GUARD BASE

785 NORTH 2200 WEST
SALT LAKE CITY, UTAH
84116-2999

ROBERT J. WALKER
No. 4222
REGISTERED PROFESSIONAL ENGINEER
STATE OF UTAH

LIGHTING PLAN

DATE: APRIL 1, 1996
REVISED:

DRAWING NO: **E2.1**

BNA Consulting Engineers
146 Pierpont Avenue
Salt Lake City, Utah 84101
(801) 532-2198
FAX (801) 532-2305

ELECTRONIC SECURITY SQUADRON FACILITY - UTAH AIR NATIONAL GUARD
PROJ. NO. USEB 939661

FFKR Architects Planners II
132 Pierpont Ave. Suite 200
Salt Lake City, Utah 84101
Telephone 801 521-6186

POWER PLAN

SCALE: 1/8" = 1'-0"

ENLARGED POWER PLAN

SCALE: 1/4" = 1'-0"

REFERENCE NOTES

1. PROVIDE POWER CONNECTION TO SYSTEMS FURNITURE.
2. TELEPHONE/DATA OUTLET MOUNTED IN SYSTEMS FURNITURE. COORDINATE REQUIREMENTS WITH FURNITURE INSTALLER.
3. FLOOR BOX FOR TELEPHONE/DATA CONNECTIONS TO SYSTEMS FURNITURE.
4. PROVIDE A 2" CONDUIT TO JUNCTION BOX AT ROOF LEVEL DETAIL 14/E6.1.
5. PROVIDE (3) 4" CONDUITS IN ACCESSIBLE CEILING TO JUNCTION BOX AT ROOF LEVEL. SEE DETAIL 14/E6.1.
6. OVERHEAD DOOR CONTROL STATION FURNISHED WITH DOOR. INSTALLED BY DIVISION 16.
7. PULLBOX 'A'.
8. MOUNT DUPLEX RECEPTACLES, 400HZ. RECEPTACLES AND 28VDC RECEPTACLES IN PLUGMOLD.
9. PROVIDE (1) 3/4" CONDUIT TO ACCESSIBLE CEILING ABOVE. MAINTENANCE 108.

GENERAL NOTES

1. ALL 400HZ. SYSTEMS TO RUN IN ALUMINUM CONDUIT.
2. PROVIDE RED EPO (EMERGENCY POWER OFF) PUSHBUTTON. PUSHBUTTON SHALL BE MUSHROOM TYPE 2 POSITION (MAINTAINED PULL, MAINTAINED PUSH).
3. PROVIDE ELECTRICALLY HELD CONTACTOR FOR CONTROL OF CIRCUITS INDICATED.

LEGEND

CONTACTOR SCHEDULE

CONTACTOR #	CIRCUITS CONTROLLED	CONTACTOR (3) SIZE	CONTACTOR PANEL	CONTROL
1	B-8,10,12,14,16	30A-6P	PANEL B EXTENSION	(2) ▣a
2	DP-1,2,5,6,7	30A-6P		(2) ▣a
3	SP1-1,3,5,2,4,6,8,10	30A-8P	PANEL SP1 EXTENSION	(2) ▣a
4	SP2-1,3,5,2,4,6	30A-8P	PANEL SP2 EXTENSION	(2) ▣a

AIR NATIONAL GUARD CIVIL ENGINEERING

UTAH AIR NATIONAL GUARD BASE

785 NORTH 2200 WEST
SALT LAKE CITY, UTAH
84116-2999

REGISTERED PROFESSIONAL ENGINEER ROBERT J. BECHERER No. 4222 STATE OF UTAH

POWER PLAN

DATE: APRIL 1, 1996
REVISED:
DRAWN BY: B.N.A.
DRAWING NO: **E3.1**

BNA Consulting Engineers
146 Pierpont Avenue
Salt Lake City, Utah 84101
(801) 532-2196
FAX# (801) 532-2305

ELECTRONIC SECURITY SQUADRON FACILITY - UTAH AIR NATIONAL GUARD
PROJ. NO. USEB 939661

FFKR *Architects Planners II*
132 Pierpont Ave. Suite 200
Salt Lake City, Utah 84101
Telephone 801 521-6186

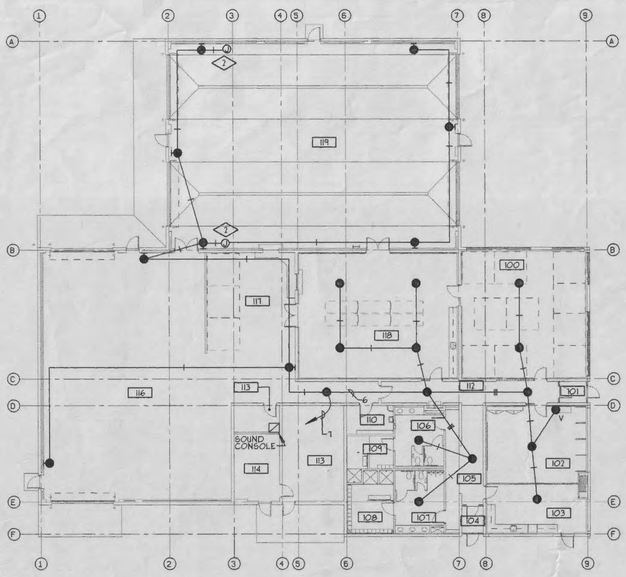

SOUND SCHEMATIC
SCALE: 1/16" = 1'-0"

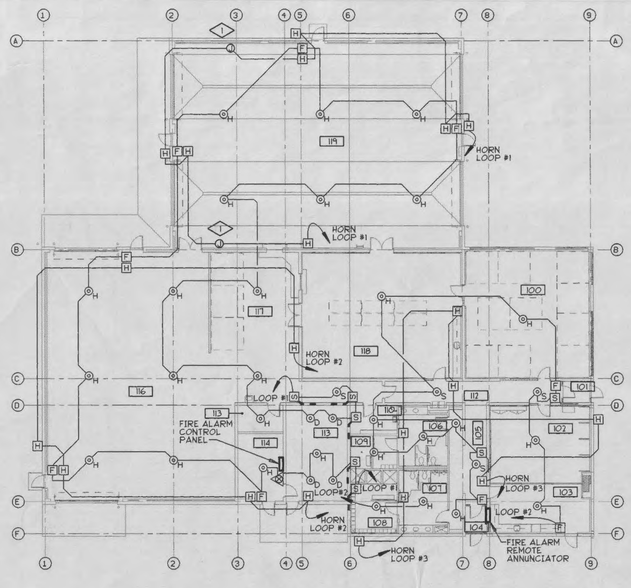

FIREALARM SCHEMATIC
SCALE: 1/16" = 1'-0"

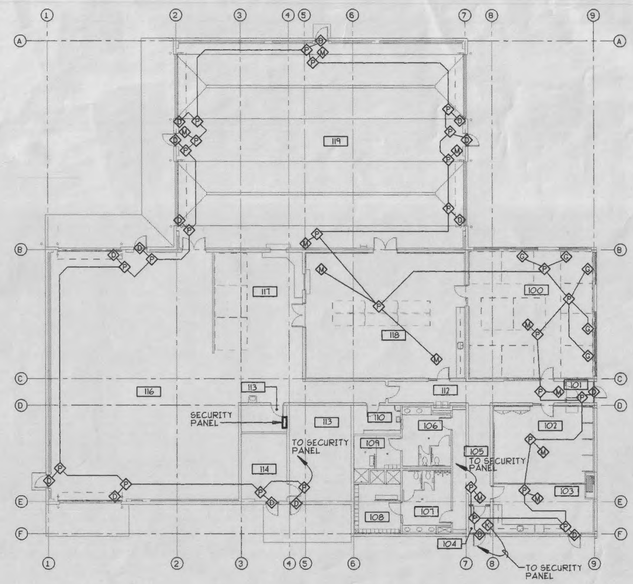

SECURITY SCHEMATIC
SCALE: 1/16" = 1'-0"

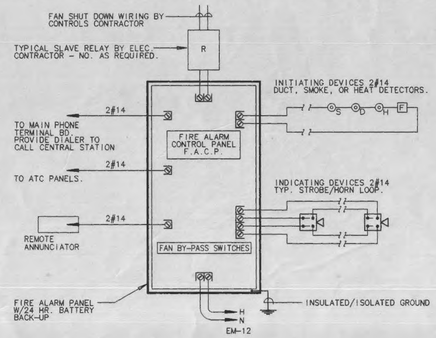

DETAIL 1 E4.1 E4.1 TYPICAL FIRE ALARM RISER

P0024-KL

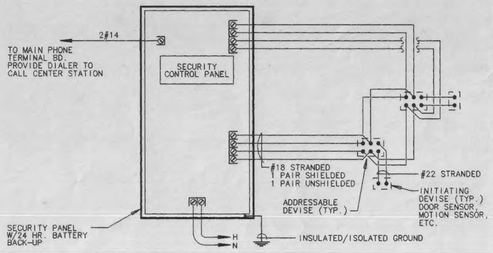

DETAIL 2 E4.1 E4.1 TYPICAL SECURITY RISER

P0024-KL

REFERENCE NOTES

1. PROVIDE TIE-IN POINT FOR FIRE ALARM HORN CIRCUIT INTO TRAILER.
2. PROVIDE TIE-IN POINT FOR PAGING SYSTEM INTO TRAILER.

GENERAL NOTES

LEGEND

AIR NATIONAL GUARD CIVIL ENGINEERING

UTAH AIR NATIONAL GUARD BASE

785 NORTH 2200 WEST
SALT LAKE CITY, UTAH
84116-2999

REGISTERED PROFESSIONAL ENGINEER ROBERT J. BECHERER No. 4222 STATE OF UTAH

SCHEMATICS

BNA Consulting Engineers
146 Pierpont Avenue
Salt Lake City, Utah 84101
(801) 532-2196
FAX# (801) 532-2305

ELECTRONIC SECURITY SQUADRON FACILITY - UTAH AIR NATIONAL GUARD
PROJ. NO. USEB 939661

FFKR Architects Planners II
132 Pierpont Ave. Suite 200
Salt Lake City, Utah 84101
Telephone 801 521-6186

DATE: APRIL 1, 1996
REVISED:
DRAWN BY:
DRAWING NO: E4.1

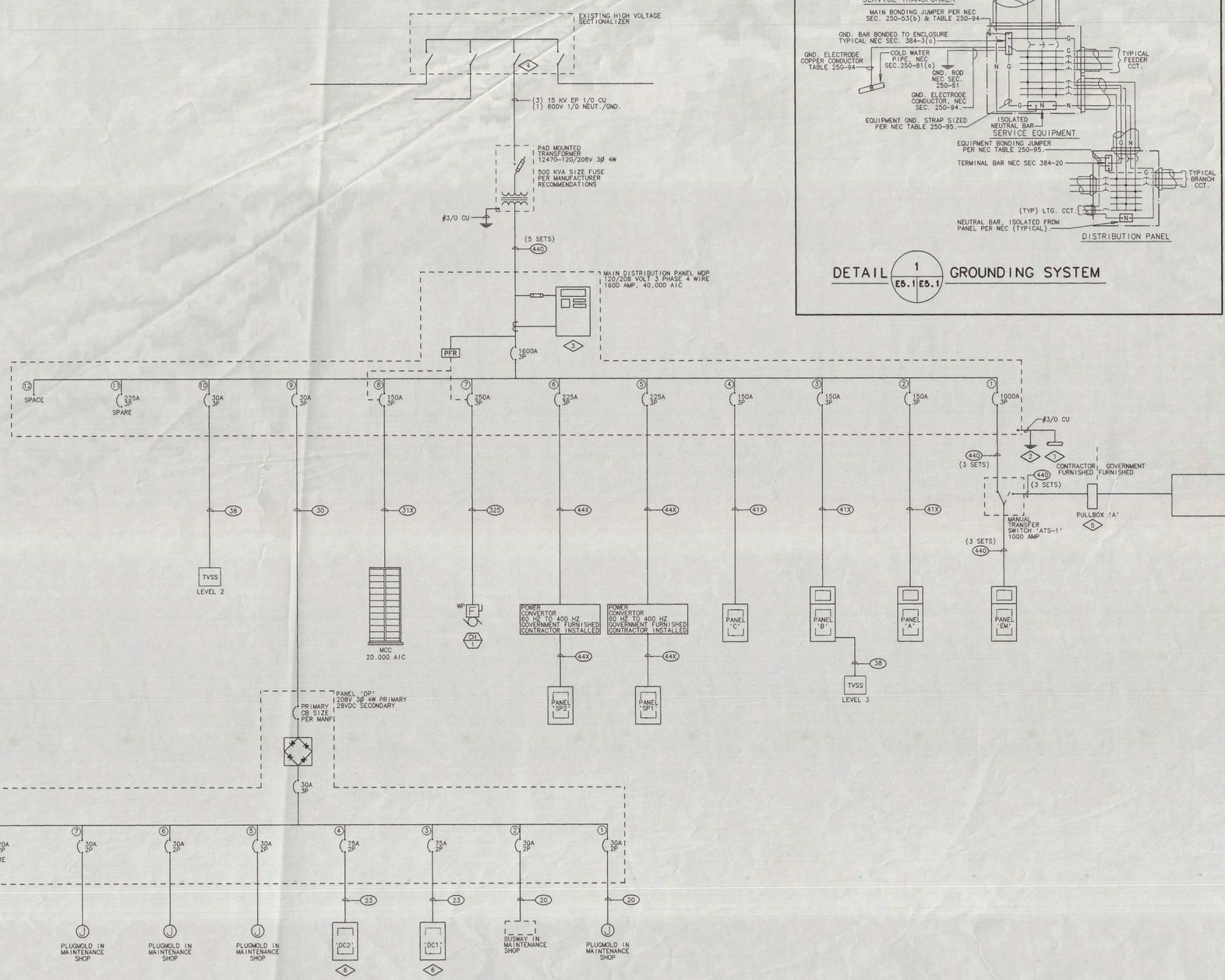

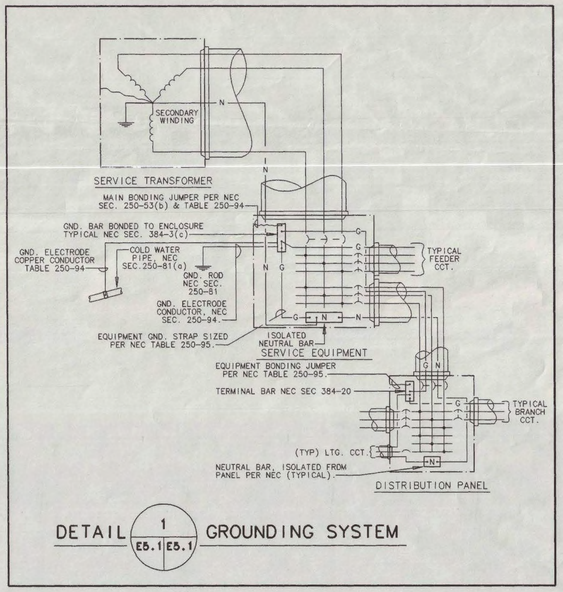

DETAIL 1 E5.1|E5.1 GROUNDING SYSTEM

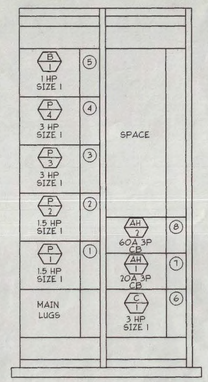

"MCC"

ONE LINE DIAGRAM
NO SCALE

CONDUCTOR & CONDUIT SCHEDULE

TYPE	AMP.	COND. SIZE	CONDUCTOR QUAN.	CONDUCTOR SIZE	INSUL-ATION	GND. COND.
20	30	3/4	2	10	THHN THWN	10
30	"	"	3	"	"	"
40	"	"	4	"	"	"
28	40	"	2	8	"	"
38	"	"	3	"	"	"
48	"	"	4	"	"	"
26	55	"	2	6	"	8
36	"	"	3	"	"	"
46	"	1	4	"	"	"
24	70	3/4	2	4	"	"
34	"	1	3	"	"	"
44	"	1 1/4	4	"	"	"
23	85	1	2	3	"	"
33	"	"	3	"	"	"
43	"	1 1/4	4	"	"	"
32	95	"	3	2	"	6
42	"	"	4	"	"	"
31	110	"	3	1	"	"
41	"	1 1/2	4	"	"	"
31X	150	"	3	1/0	"	"
41X	"	"	4	"	"	"
32X	175	"	3	2/0	"	"
42X	"	2	4	"	"	"
33X	200	"	3	3/0	"	"
43X	"	"	4	"	"	"
34X	230	"	3	4/0	"	4
44X	"	2 1/2	4	"	"	"
325	255	2	3	250	"	"
425	"	2 1/2	4	"	"	"
335	310	"	3	350	"	3
435	"	4	4	"	"	"
340	335	"	3	400	"	"
440	"	"	4	"	"	"
350	380	"	3	500	XHHW	"
450	"	"	4	"	"	"

* IN PARALLEL RUNS, SIZE GND. COND. IN ACCORDANCE W/ NEC PARA. 250-95 7/22/91

REFERENCE NOTES

1. PROVIDE 50' OF 2/0 BARE COPPER CONDUCTOR LOCATED WITHIN AND NEAR THE BOTTOM OF FOOTING (MINIMUM 2" COVER)
2. GROUND TO BUILDING WATER MAINS, STRUCTURAL STEEL AND GROUND RODS AS DESCRIBED IN SPECIFICATIONS.
3. SQUARE D POWER LOGIC METERING OR EQUIVALENT.
4. PROVIDE LOAD BREAK ELBOWS FOR TERMINATION INTO EXISTING SECTIONALIZER.
5. PROVIDE NEMA 3R 1200 AMP NON FUSED SAFETY SWITCH FOR CONNECTION OF OWNER FURNISHED EMERGENCY GENERATOR.
6. PROVIDE 75 AMP CONNECTOR FOR CONNECTION OF OWNER TRAILER, VERIFY CONFIGURATION BEFORE INSTALLING.

GENERAL NOTES

1. ALL 400HZ. SYSTEMS TO RUN IN ALUMINUM CONDUIT.

LEGEND

AIR NATIONAL GUARD CIVIL ENGINEERING

UTAH AIR NATIONAL GUARD BASE

765 NORTH 2200 WEST
SALT LAKE CITY, UTAH
84116-2999

ONE LINE DIAGRAM

DATE: APRIL 1, 1996
REVISED:
DRAWN BY: BNA
DRAWING NO: **E5.1**

BNA Consulting Engineers
146 Pierpont Avenue
Salt Lake City, Utah 84101
(801) 532-2198
FAX# (801) 532-2305

ELECTRONIC SECURITY SQUADRON FACILITY - UTAH AIR NATIONAL GUARD
PROJ. NO. USEB 939661

FFKR Architects Planners II
132 Pierpont Ave. Suite 200
Salt Lake City, Utah 84101
Telephone 801 521-8186

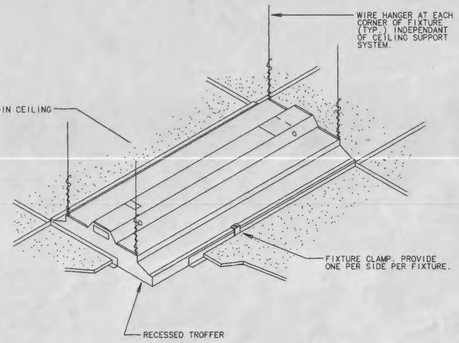

DETAIL 1 / E2.1 E6.1 TYP. RECESSED FIXTURE MOUNTING

B001-FK

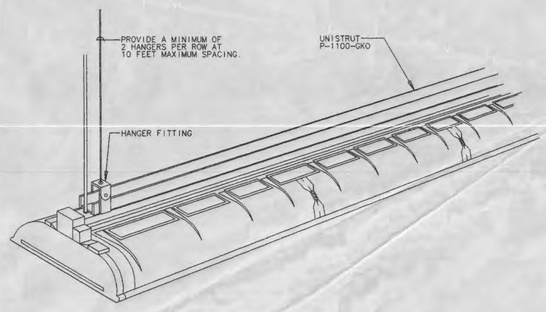

DETAIL 2 / E2.1 E6.1 FIXTURE MOUNTING

B0012-BB

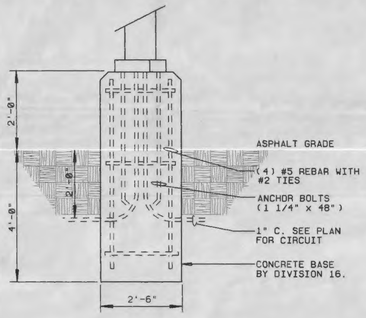

DETAIL 3 / E1.1 E6.1 POLE BASE

I004-FK

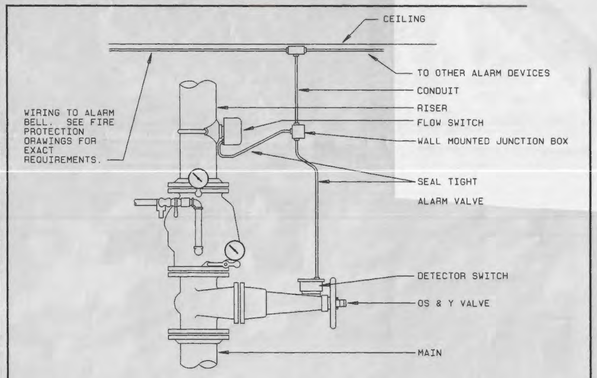

DETAIL 4 / E3.1 E6.1 FIRE SPRINKLER CONNECTION

A001-FK

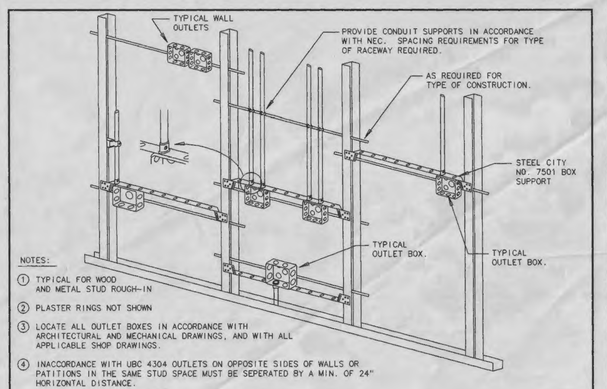

DETAIL 5 / E6.1 TYPICAL ROUGH-IN REQUIREMENTS

G002-FK

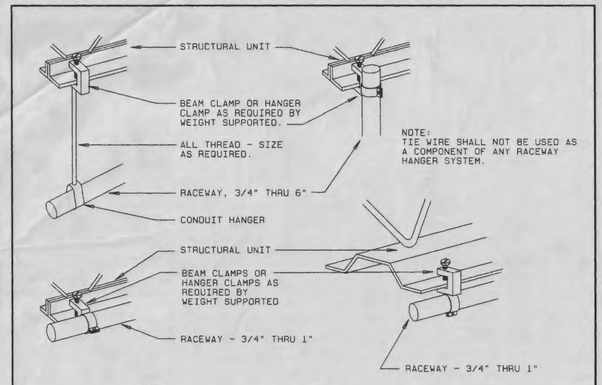

DETAIL 6 / E6.1 TYPICAL RACEWAY SUPPORT METHODS

G005-FK

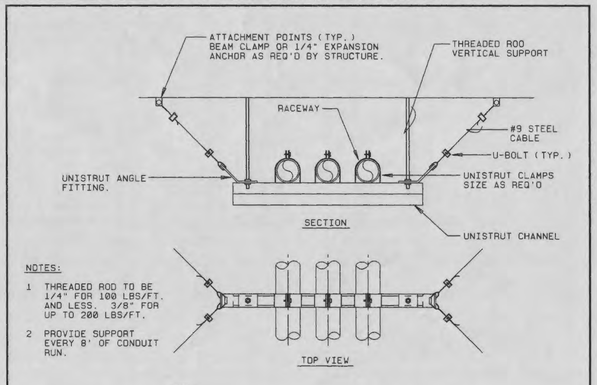

DETAIL 7 / E6.1 MULTIPLE RACEWAY SUPPORT

G006-FK

AB1 #3
NOTE 1.

GENERAL NOTES

1. EXTERIOR POLE MOUNTED FIXTURES TO INCLUDE LIGHT FIXTURES, POLES, CONCRETE, BASES AND BRANCH CIRCUIT WIRING SHALL BE PRICED AS ALTERNATE BID ITEM NO. 3. PRICING TO INCLUDE ALL MATERIALS, TRENCHING BACKFILLING AND LABOR IN ORDER TO PROVIDE A COMPLETE AND OPERATIONAL SYSTEM.

LEGEND

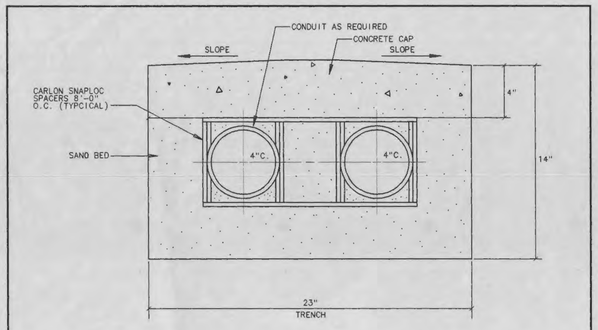

DETAIL 8 / E1.1 E6.1 DUCT BANK

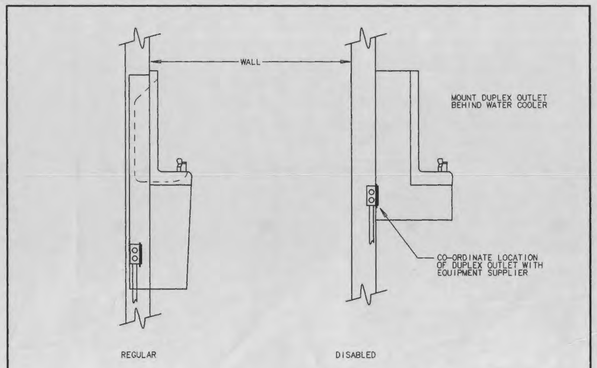

DETAIL 9 / E3.1 E6.1 ELECTRIC WATER COOLER (EWC)

P0011-FK

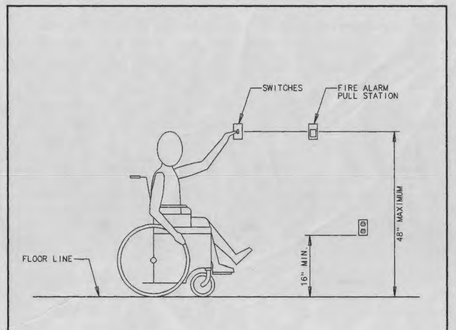

DETAIL 10 / E6.1 MOUNTING HEIGHTS

P0015-FK

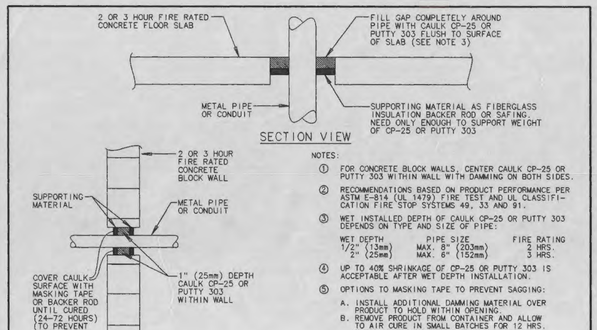

DETAIL 11 / E6.1 FIRE STOP

B0045-BB

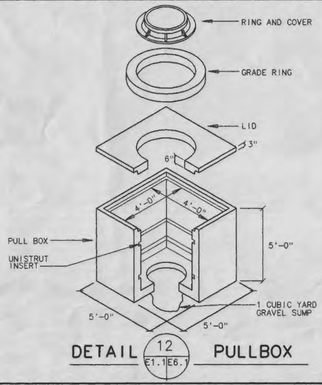

DETAIL 12 / E1.1 E6.1 PULLBOX

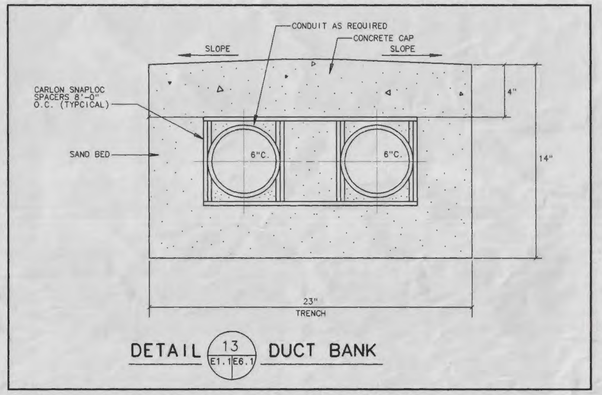

DETAIL 13 / E1.1 E6.1 DUCT BANK

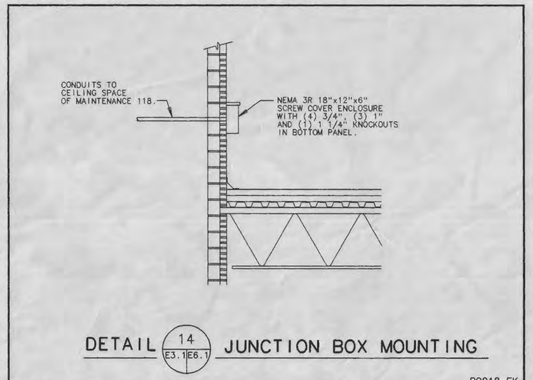

DETAIL 14 / E3.1 E6.1 JUNCTION BOX MOUNTING

P0018-FK

AIR NATIONAL GUARD
CIVIL ENGINEERING

UTAH AIR NATIONAL GUARD BASE

785 NORTH 2200 WEST
SALT LAKE CITY, UTAH
84116-2999

REGISTERED PROFESSIONAL ENGINEER
ROBERT J. BECKSTEAD
No. 161222
STATE OF UTAH

ELECTRICAL DETAILS

BNA Consulting Engineers
146 Pierpont Avenue
Salt Lake City, Utah 84101
(801) 532-2196
FAX (801) 532-2305

ELECTRONIC SECURITY SQUADRON FACILITY - UTAH AIR NATIONAL GUARD
PROJ. NO. USEB 939661

FFKR Architects Planners II
132 Pierpont Ave. Suite 200
Salt Lake City, Utah 84101
Telephone 801 521-6186

DATE: APRIL 1, 1996
REVISED:
DRAWN BY: BNA
DRAWING NO: E6.1

PANELBOARD SCHEDULE

PANEL 'MDP' TYPE QMB 120/208 VOLTS 3 Ø 4 W
MOUNTING ☐ FLUSH ☒ SURFACE DIMENSIONS W D H LOCATION ELEC. ROOM 1600 AMP. MAINS ☐ LUGS ☒ BREAKER

BRANCH BREAKERS

ITEM	AMPS	POLE	WIRE SIZE	CIR. NO.	LEFT PHASE LOAD A	B	C	RIGHT PHASE LOAD A	B	C	CIR. NO.	AMPS	POLE	WIRE SIZE	ITEM
PANEL 'EM'	1000	3	400	1	4840			14155			2	150	3	1/0	PANEL 'A'
–	–	–	–			4150			13380			–	–	–	–
–	–	–	–				4225			12820		–	–	–	–
PANEL 'B'	150	3	1/0	3	7800			15480			4	150	3	1/0	PANEL 'C'
–	–	–	–			8200			11220			–	–	–	–
–	–	–	–				7200			10680		–	–	–	–
PANEL 'SP1'	225	3	4/0	5	16800			16800			6	225	3	4/0	PANEL 'SP2'
–	–	–	–			16800			16800			–	–	–	–
–	–	–	–				16800			16800		–	–	–	–
CH-1 CHILLER	250	3	250	7	22560			14080			8	150	3	1/0	MCC
–	–	–	–			22560			14080			–	–	–	–
–	–	–	–				22560			14080		–	–	–	–
PANEL 'DP'	30	3	10	9							1–	30	3	8	TVSS
–	–	–	–									–	–	–	–
–	–	–	–									–	–	–	–
SPARE	225	3		11							12		3		SPACE
–	–	–											–		–
–	–	–											–		–
					52000	51710	50785	60515	55480	54380					
					112515	107190	105165	TOTAL							
					938	893	876	AMPS./PHASE							

FEEDER: ☐ TOP ☐ BOTTOM
TOTAL CONNECTED LOAD 324.87 KVA
CONDUIT SIZE 3" WIRE SIZE 4 #400
EQUIPMENT RATING 40,000 AMPS RMS SYM.

PANELBOARD SCHEDULE

PANEL 'A' TYPE NQOD 120/208 VOLTS 3 Ø 4 W
MOUNTING ☐ FLUSH ☒ SURFACE DIMENSIONS W D H LOCATION ELEC. ROOM 225 AMP. MAINS ☒ LUGS ☐ BREAKER

BRANCH BREAKERS

ITEM	AMPS	POLE	WIRE SIZE	CIR. NO.	LEFT PHASE LOAD A	B	C	RIGHT PHASE LOAD A	B	C	CIR. NO.	AMPS	POLE	WIRE SIZE	ITEM
SITE LIGHTING	20	1	8	1	1380			1035			2	20	1	12	LIGHTING
SITE LIGHTING	20	1	8	3		1380			1035		4	20	1	12	LIGHTING
BUILDING LIGHTING	20	1	10	5			920			1610	6	20	1	12	LIGHTING
BUILDING LIGHTING	20	1	10	7	920			1380			8	20	1	12	LIGHTING
BUILDING LIGHTING	20	1	10	9		1380			1495		10	20	1	12	LIGHTING
BUILDING LIGHTING	20	1	10	11			1380			820	12	20	1	12	LIGHTING
LIGHTING	20	1	12	13	1750			750			14	20	1	12	LIGHTING
LIGHTING	20	1	12	15		1750			530		16	20	1	12	FC-1 FAN COIL UNIT
LIGHTING	20	1	12	17			1750			530	18	20	1	12	EF-7 EXHAUST FAN
LIGHTING	20	1	12	19	1130			1120			20	20	3	10	OVERHEAD DOOR
LIGHTING	20	1	12	21		1225			1120		22	–	–	–	–
LIGHTING	20	1	12	23			1225			1120	24	–	–	–	–
LIGHTING	20	1	12	25	1225			1120			26	20	3	10	OVERHEAD DOOR
LIGHTING	20	1	12	27		1225			1120		28	–	–	–	–
LIGHTING	20	1	12	29			1225			1120	30	–	–	–	–
LIGHTING	20	1	12	31	1225			1120			32	20	3	10	OVERHEAD DOOR
SPARE	20	1		33					1120		34	–	–	–	–
SPARE	20	1		35						1120	36	–	–	–	–
SPACE				37							38				SPACE
SPACE				39							40				SPACE
SPACE				41							42				SPACE
					7630	6960	6500	6525	6420	6320					
					14155	13380	12820	TOTAL							
					118	112	107	AMPS./PHASE							

FEEDER: ☐ TOP ☐ BOTTOM
TOTAL CONNECTED LOAD 40.355 KVA
CONDUIT SIZE 1 1/2" WIRE SIZE 4 #1/0
EQUIPMENT RATING 20,000 AMPS RMS SYM.

PANELBOARD SCHEDULE

PANEL 'B' TYPE NQOD 120/208 VOLTS 3 Ø 4 W
MOUNTING ☐ FLUSH ☒ SURFACE DIMENSIONS W D H LOCATION ELEC. ROOM 225 AMP. MAINS ☒ LUGS ☐ BREAKER

BRANCH BREAKERS

ITEM	AMPS	POLE	WIRE SIZE	CIR. NO.	LEFT PHASE LOAD A	B	C	RIGHT PHASE LOAD A	B	C	CIR. NO.	AMPS	POLE	WIRE SIZE	ITEM
RECEPTACLES	20	1	12	1	1000			1000			2	20	1	12	RECEPTACLES
REFRIGERATOR	20	1	12	3		800			1000		4	20	1	12	RECEPTACLES
VENDING	20	1	12	5			500			600	6	20	1	12	RECEPTACLES
RECEPTACLES	20	1	12	7	600			600			8	20	1	12	PLUGMOLD
RECEPTACLES	20	1	12	9		1000			400		10	20	1	12	PLUGMOLD
RECEPTACLES	20	1	12	11			1000			600	12	20	1	12	PLUGMOLD
RECEPTACLES	20	1	12	13	1000			600			14	20	1	12	PLUGMOLD
RECEPTACLES	20	1	12	15		1000			1000		16	20	1	12	BUSWAY
RECEPTACLES	20	1	12	17			800			500	18	20	1	12	RECEPTACLES
RECEPTACLES	20	1	12	19	1000			1000			20	20	1	12	RECEPTACLES
RECEPTACLES	20	1	12	21		1000			1000		22	20	1	12	RECEPTACLES
RECEPTACLES	20	1	12	23			1000			1000	24	20	1	12	RECEPTACLES
RECEPTACLES	20	1	12	25	1000						26	20	1		SPARE
RECEPTACLES	20	1	12	27		1000					28	20	1		SPARE
IRRIGATION CLOCK	20	1	12	29			1200				30	20	1		SPARE
SPARE	20	1		31							32				SPACE
SPARE	20	1		33							34				SPACE
SPARE	20	1		35							36				SPACE
SPACE				37							38	30	3	8	TVSS
SPACE				39							40	–	–	–	–
SPACE				41							42	–	–	–	–
					4600	4800	4500	3200	3400	2700					
					7800	8200	7200	TOTAL							
					65	68	60	AMPS./PHASE							

FEEDER: ☐ TOP ☐ BOTTOM
TOTAL CONNECTED LOAD 23.2 KVA
CONDUIT SIZE 1 1/2" WIRE SIZE 4 #1/0
EQUIPMENT RATING 20,000 AMPS RMS SYM.

PANELBOARD SCHEDULE

PANEL 'C' TYPE NQOD 120/208 VOLTS 3 Ø 4 W
MOUNTING ☐ FLUSH ☒ SURFACE DIMENSIONS W D H LOCATION ELEC. ROOM 225 AMP. MAINS ☒ LUGS ☐ BREAKER

BRANCH BREAKERS

ITEM	AMPS	POLE	WIRE SIZE	CIR. NO.	LEFT PHASE LOAD A	B	C	RIGHT PHASE LOAD A	B	C	CIR. NO.	AMPS	POLE	WIRE SIZE	ITEM
RECEPTACLES	20	1	12	1	800			530			2	20	1	12	EF-3 EXHAUST FAN
RECEPTACLES	20	1	12	3		800			530		4	20	1	12	EF-1 EXHAUST FAN
EWC	20	1	12	5			1000			530	6	20	1	12	EF-2 EXHAUST FAN
EWC	20	1	12	7	1000			755			8	20	1	12	EF-4 EXHAUST FAN
RECEPTACLES	20	1	12	9		600			755		10	20	1	12	UH-1 UNIT HEATER
RECEPTACLES	20	1	12	11			800			755	12	20	1	12	UH-1 UNIT HEATER
HAND DRYER	30	1	10	13	2400			2100			14	30	3	10	AC-1 EVAP. COOLER
RECEPTACLES	20	1	12	15		1000			2100		16	–	–	–	–
UH-1 UNIT HEATERS	20	1	12	17			755			2100	18	–	–	–	–
UH-1 UNIT HEATERS	20	1	12	19	755			2100			20	30	3	10	AC-1 EVAP. COOLER
EF-5 EXHAUST FAN	20	3	10	21		720			2100		22	–	–	–	–
–	–	–	–	23			720			2100	24	–	–	–	–
–	–	–	–	25	720			1200			26	20	1	12	EVAP. PUMP
EF-6 EXHAUST FAN	20	3	10	27		720			1200		28	20	1	12	EVAP. PUMP
–	–	–	–	29			720			1200	30	20	1	12	WS-1 WATER SOFTNER
–	–	–	–	31	720			2400			32	30	1	10	HAND DRYER
CP-1 CIRC. PUMP	20	1	12	33		695					34	20	1		SPARE
SPARE	20	1	12	35							36	20	1		SPARE
SPACE				37							38				SPACE
SPACE				39							40				SPACE
SPACE				41							42				SPACE
					6395	4535	3995	9085	6685	6685					
					15480	11220	10680	TOTAL							
					129	94	89	AMPS./PHASE							

FEEDER: ☐ TOP ☐ BOTTOM
TOTAL CONNECTED LOAD 34.98 KVA
CONDUIT SIZE 1 1/2" WIRE SIZE 4 #1/0
EQUIPMENT RATING 20,000 AMPS RMS SYM.

PANELBOARD SCHEDULE

PANEL 'EM' TYPE NQOD 120/208 VOLTS 3 Ø 4 W
MOUNTING ☐ FLUSH ☒ SURFACE DIMENSIONS W D H LOCATION ELEC. ROOM 1000 AMP. MAINS ☐ LUGS ☒ BREAKER

BRANCH BREAKERS

ITEM	AMPS	POLE	WIRE SIZE	CIR. NO.	LEFT PHASE LOAD A	B	C	RIGHT PHASE LOAD A	B	C	CIR. NO.	AMPS	POLE	WIRE SIZE	ITEM
LIGHTING	20	1	12	1	1080			1000			2	20	1	12	PHONEBOARD
LIGHTING	20	1	12	3		1100			1000		4	20	1	12	PHONEBOARD
LIGHTING	20	1	12	5			1225			1000	6	20	1	12	PHONEBOARD
LIGHTING	20	1	12	7	760			1000			8	20	1	12	PHONEBOARD
LIGHTING	20	1	12	9		1050			1000		10	20	1	12	ATC PANEL
SOUND CONSOLE	20	1	12	11			1000			1000	12	20	1	12	F.A. CONTROL PANEL
SECURITY PANEL	20	1	12	13	1000						14	20	1		SPARE
SPARE	20	1		15							16	20	1		SPARE
SPARE	20	1		17							18	20	1		SPARE
SPACE				19							20				SPACE
SPACE				21							22				SPACE
SPACE				23							24				SPACE
SPACE				25							26				SPACE
SPACE				27							28				SPACE
SPACE				29							30				SPACE
				31							32				
				33							34				
				35							36				
				37							38				
				39							40				
				41							42				
					2840	2150	2225	2000	2000	2000					
					4840	4150	4225	TOTAL							
					40	35	35	AMPS./PHASE							

FEEDER: ☐ TOP ☐ BOTTOM
TOTAL CONNECTED LOAD 13.215 KVA
CONDUIT SIZE 3" WIRE SIZE 4 #400
EQUIPMENT RATING 20,000 AMPS RMS SYM.

PANELBOARD SCHEDULE

PANEL 'SP1' TYPE NQOD 120/208 VOLTS 3 Ø 4 W
MOUNTING ☐ FLUSH ☒ SURFACE DIMENSIONS W D H LOCATION ELEC. ROOM 225 AMP. MAINS ☐ LUGS ☒ BREAKER

BRANCH BREAKERS

ITEM	AMPS	POLE	WIRE SIZE	CIR. NO.	LEFT PHASE LOAD A	B	C	RIGHT PHASE LOAD A	B	C	CIR. NO.	AMPS	POLE	WIRE SIZE	ITEM
RECEPTACLE	30	1	10	1	2400			2400			2	30	1	10	RECEPTACLE
RECEPTACLE	30	1	10	3		2400			2400		4	30	1	10	RECEPTACLE
RECEPTACLE	30	1	10	5			2400			2400	6	30	1	10	RECEPTACLE
SPARE	30	1		7				2400			8	30	1	10	RECEPTACLE
SPARE	30	1		9					2400		10	30	1	10	RECEPTACLE
SPARE	30	1		11							12	30	1		SPARE
SPACE				13							14				SPACE
SPACE				15							16				SPACE
SPACE				17							18				SPACE
SPACE				19							20				SPACE
SPACE				21							22				SPACE
SPACE				23							24				SPACE
				25							26				
				27							28				
				29							30				
				31							32				
				33							34				
				35							36				
				37							38				
				39							40				
				41							42				
					2400	2400	2400	4800	4800	2400					
					7200	7200	4800	TOTAL							
					60	60	40	AMPS./PHASE							

FEEDER: ☐ TOP ☐ BOTTOM
TOTAL CONNECTED LOAD 19.2 KVA
CONDUIT SIZE 2 1/2" WIRE SIZE 4 #4/0
EQUIPMENT RATING 20,000 AMPS RMS SYM.

PANELBOARD SCHEDULE

PANEL 'SP2' TYPE NQOD 120/208 VOLTS 3 Ø 4 W
MOUNTING ☐ FLUSH ☒ SURFACE DIMENSIONS W D H LOCATION ELEC. ROOM 225 AMP. MAINS ☒ LUGS ☐ BREAKER

BRANCH BREAKERS

ITEM	AMPS	POLE	WIRE SIZE	CIR. NO.	LEFT PHASE LOAD A	B	C	RIGHT PHASE LOAD A	B	C	CIR. NO.	AMPS	POLE	WIRE SIZE	ITEM
BUSWAY	30	1	10	1	2400			2400			2	30	1	10	RECEPTACLE
BUSWAY	30	1	10	3		2400			2400		4	30	1	10	RECEPTACLE
BUSWAY	30	1	10	5			2400			2400	6	30	1	10	RECEPTACLE
SPARE	30	1		7							8	30	1		SPARE
SPARE	30	1		9							10	30	1		SPARE
SPARE	30	1		11							12	30	1		SPARE
SPACE				13							14				SPACE
SPACE				15							16				SPACE
SPACE				17							18				SPACE
SPACE				19							20				SPACE
SPACE				21							22				SPACE
SPACE				23							24				SPACE
				25							26				
				27							28				
				29							30				
				31							32				
				33							34				
				35							36				
				37							38				
				39							40				
				41							42				
					2400	2400	2400	2400	2400	2400					
					4800	4800	4800	TOTAL							
					40	40	40	AMPS./PHASE							

FEEDER: ☐ TOP ☐ BOTTOM
TOTAL CONNECTED LOAD 14.4 KVA
CONDUIT SIZE 2 1/2" WIRE SIZE 4 #4/0
EQUIPMENT RATING 20,000 AMPS RMS SYM.

BNA Consulting Engineers
146 Pierpont Avenue
Salt Lake City, Utah 84101
(801) 532-2196
FAX# (801) 532-2305

ELECTRONIC SECURITY SQUADRON FACILITY - UTAH AIR NATIONAL GUARD
PROJ. NO. USEB 939661

FFKR Architects Planners II
132 Pierpont Ave. Suite 200
Salt Lake City, Utah 84101
Telephone 801 521-6186

REGISTERED PROFESSIONAL ENGINEER ROBERT J. BECKERER No. 4222 STATE OF UTAH

AIR NATIONAL GUARD CIVIL ENGINEERING

UTAH AIR NATIONAL GUARD BASE
785 NORTH 2200 WEST
SALT LAKE CITY, UTAH
84116-2999

PANELBOARD SCHEDULES

DATE: APRIL 1,1996
REVISED:
DRAWN BY: BNA
DRAWING NO: **E7.1**

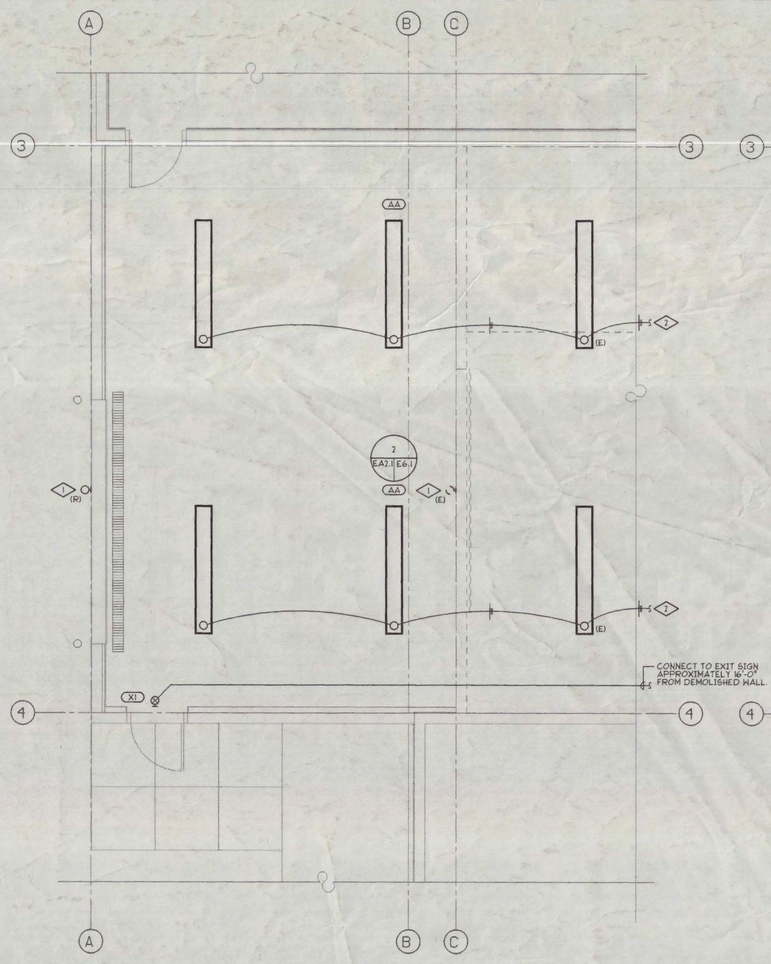

LIGHTING PLAN

SCALE: 1/4" = 1'-0" ADDITION FLOOR PLAN

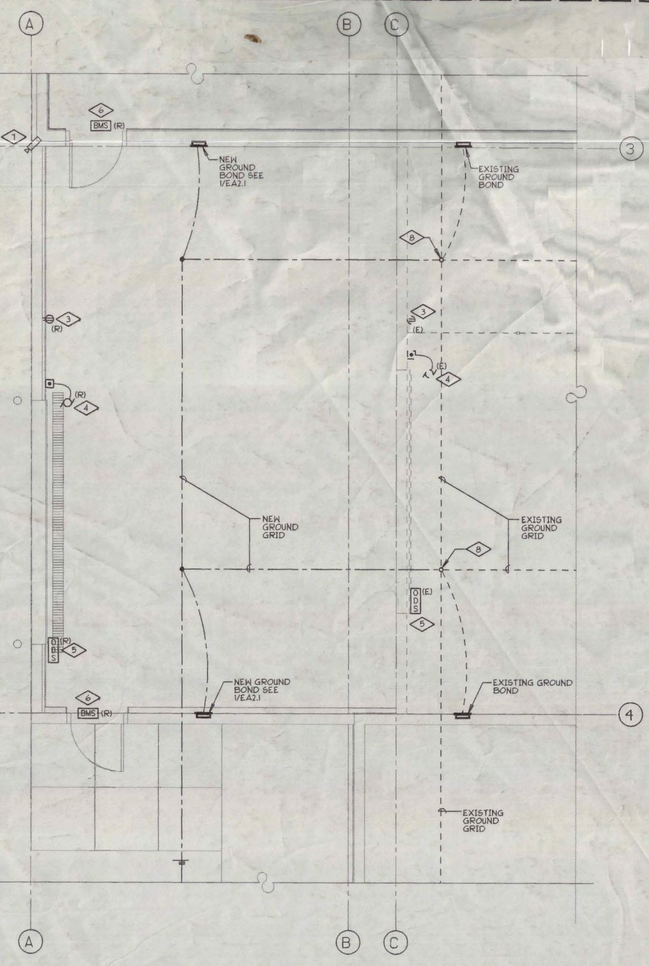

POWER PLAN

SCALE: 1/4" = 1'-0" ADDITION FLOOR PLAN

ABI #1
NOTE 1

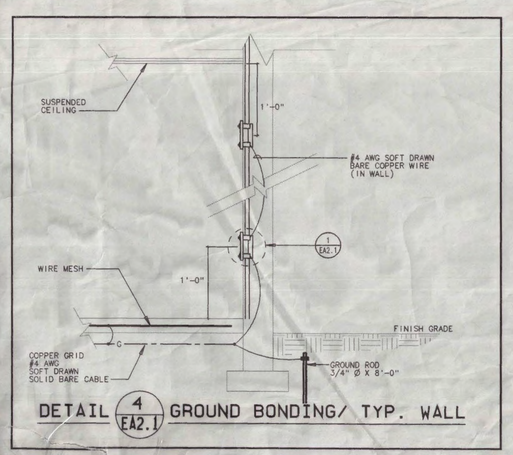

DETAIL 4/EA2.1 GROUND BONDING/ TYP. WALL

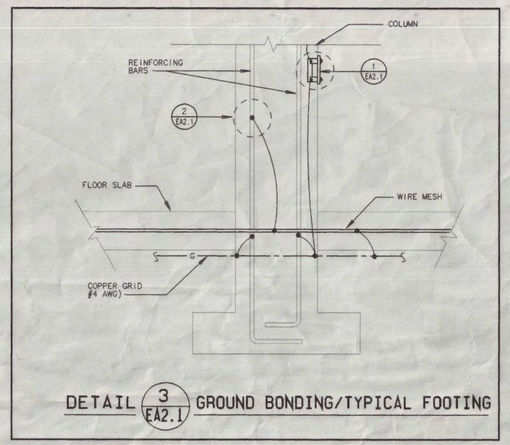

DETAIL 3/EA2.1 GROUND BONDING/TYPICAL FOOTING

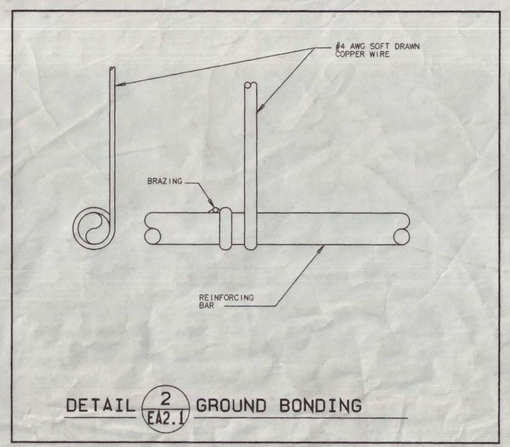

DETAIL 2/EA2.1 GROUND BONDING

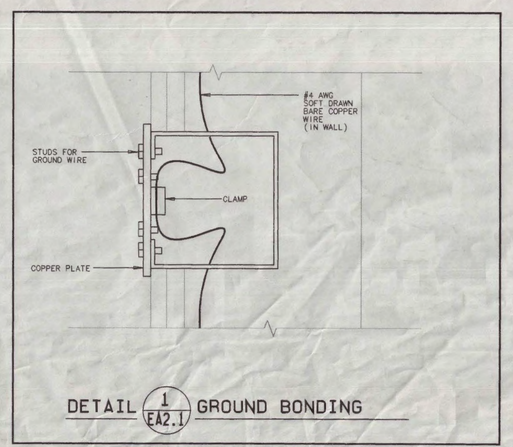

DETAIL 1/EA2.1 GROUND BONDING

ABI #1
NOTE 1

REFERENCE NOTES

1. RELOCATE EXISTING WALL MOUNTED LIGHT FIXTURE AS INDICATED. EXTEND CONDUIT AND WIRE TO NEW LOCATION AS REQUIRED.
2. CONNECT NEW LIGHT FIXTURES INTO EXISTING LIGHT FIXTURES FOR POWER CIRCUITING AND CONTROL. CONTROL TO MATCH EXISTING WITH ROWS SWITCHED SEPARATELY.
3. RELOCATE EXISTING DUPLEX RECEPTACLE AS INDICATED. EXTEND CONDUIT AND WIRE TO NEW LOCATION AS REQUIRED.
4. EXISTING POWERED OVERHEAD DOOR TO BE RELOCATED. RELOCATE CONTROL STATION AND EXTEND CONDUIT AND WIRE TO NEW LOCATION AS REQUIRED.
5. RELOCATE EXISTING OVERHEAD DOOR SECURITY SWITCH AS INDICATED. EXTEND CONDUIT AND WIRE TO NEW LOCATION AS REQUIRED.
6. RELOCATE EXISTING DOOR SECURITY SWITCH AS INDICATED. EXTEND CONDUIT AND WIRE TO NEW LOCATION AS REQUIRED.
7. RELOCATE EXISTING SECURITY CAMERA UP TO NEW PARAPET. EXTEND VIDEO CABLE, CONTROL WIRING AND CONDUIT TO NEW LOCATION AS REQUIRED.
8. TIE NEW GROUND GRID INTO EXISTING GROUNDING GRID.

GENERAL NOTES

1. REMODEL AND ADDITION OF EXISTING FACILITY SHALL BE PRICED AS ALTERNATE BID ITEM NO. 1 PRICING TO INCLUDE ALL MATERIALS AND LABOR IN ORDER TO PROVIDE A COMPLETE AND OPERATIONAL SYSTEM.

AIR NATIONAL GUARD — CIVIL ENGINEERING

UTAH AIR NATIONAL GUARD BASE
785 NORTH 2200 WEST
SALT LAKE CITY, UTAH
84116-2999

ROBERT H. BERNASKI — REGISTERED PROFESSIONAL ENGINEER — STATE OF UTAH

ELECTRICAL PLAN

DATE: APRIL 1, 1996
REVISED:
DRAWN BY:
DRAWING NO: **EA2.1**

BNA Consulting Engineers
1445 Pierpont Avenue
Salt Lake City, Utah 84101
(801) 533-2100
FAX (801) 532-2305

ELECTRONIC SECURITY SQUADRON FACILITY - UTAH AIR NATIONAL GUARD
PROJ. NO. USEB 939661

FFKR Architects Planners II
132 Pierpont Ave. Suite 200
Salt Lake City, Utah 84101
Telephone 801 521-8186

GENERAL FIRE PROTECTION NOTES

1. THE FIRE SPRINKLER CONTRACTOR SHALL COORDINATE HIS WORK WITH THE ELECTRICAL, SHEET METAL, PLUMBING, AND CEILING CONTRACTORS TO AVOID ANY CONFLICTS IN PIPE ROUTING OR HEAD LOCATIONS.
2. RUN SPRINKLING PIPING AS HIGH AS POSSIBLE IN SPACE ABOVE CEILING AND COORDINATE WITH DUCTWORK.
3. FIRE SPRINKLER PLANS SHALL BE APPROVED BY ALL GOVERNING AGENCIES PRIOR TO SUBMITTING PLANS TO THE CONTRACTING OFFICER.
4. THE FIRE PROTECTION CONTRACTOR SHALL PROVIDE COMPLETE FIRE SPRINKLER SYSTEMS, INCLUDING ALL ITEMS AS REQUIRED OR RECOMMENDED BY ALL GOVERNING AGENCIES.
5. FIRE SPRINKLER SYSTEM SHALL COMPLY WITH N.F.P.A. 13, AND ALL GOVERNING AGENCIES.
6. PIPE SLEEVES THROUGH FIRE-RATED WALLS, PARTITIONS, AND CEILINGS SHALL BE OF FIRE RATED CONSTRUCTION. SPACE BETWEEN PIPE AND SLEEVE SHALL BE PACKED WITH FIREPROOF MATERIAL, U.L. LISTED.
7. FIRE SPRINKLER HEADS IN INDIVIDUAL ROOMS TO BE RUN IN STRAIGHT LINES AND COORDINATED WITH CEILING AND LIGHTS. WHERE CEILING TILES ARE PROVIDED, FIRE SPRINKLER HEADS SHALL BE CENTERED IN THE TILE.
8. FIRE SPRINKLER CONTRACTOR SHALL COORDINATE HIS LOCATION OF PIPING VERY CAREFULLY WITH THE ARCHITECTURAL AND STRUCTURAL PLANS AND AS APPROVED BY THE ARCHITECT.
9. HEAD GUARDS TO BE PROVIDED IN ACCORDANCE WITH N.F.P.A. 13.
10. FIRE SPRINKLER TEST VALVES TO BE LOCATED IN AREAS CONVENIENT TO MAINTENANCE PERSONNEL, BUT AWAY FROM PUBLIC ACCESS.
11. THE CONTRACTING OFFICE SHALL BE NOTIFIED (IN WRITING) AT LEAST THREE DAYS IN ADVANCE OF THE FOLLOWING:
    A. HYDROSTATIC TEST AND FINAL INSPECTION OF OVERHEAD SYSTEMS PRIOR TO INSTALLATION OF CEILINGS.
    B. FLUSHING OF UNDERGROUND PRIOR TO CONNECTION OF OVERHEAD.
    C. HYDROSTATIC TEST AND FINAL INSPECTION OF UNDERGROUND PRIOR TO BACKFILLING.
12. CONTRACTOR SHALL FIELD VERIFY ALL PIPE LOCATIONS PRIOR TO FABRICATION OF PIPE SYSTEMS.
13. FIRE PROTECTION DRAWINGS ARE DIAGRAMMATIC ONLY.

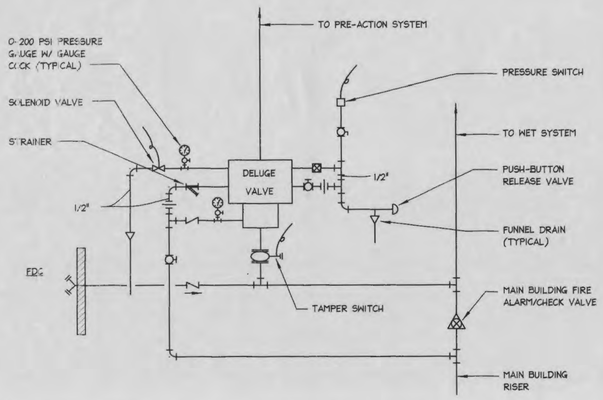

PRE-ACTION FIRE SPRINKLER RISER SCHEMATIC

NOT TO SCALE — 1 FP2.1

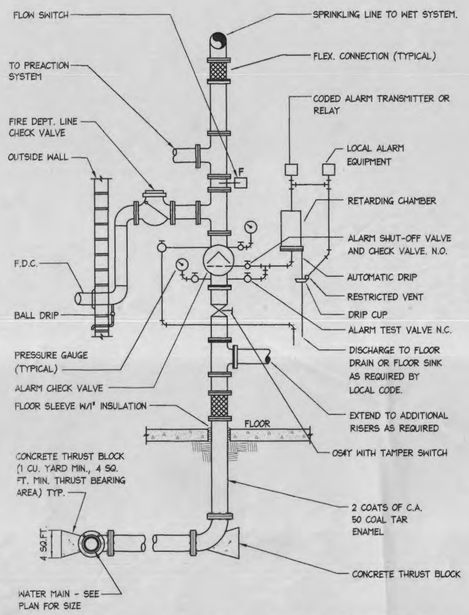

S.L.C. FIRE SPRINKLE RISER INSTALLATION DETAIL

NOT TO SCALE — 2 FP2.1

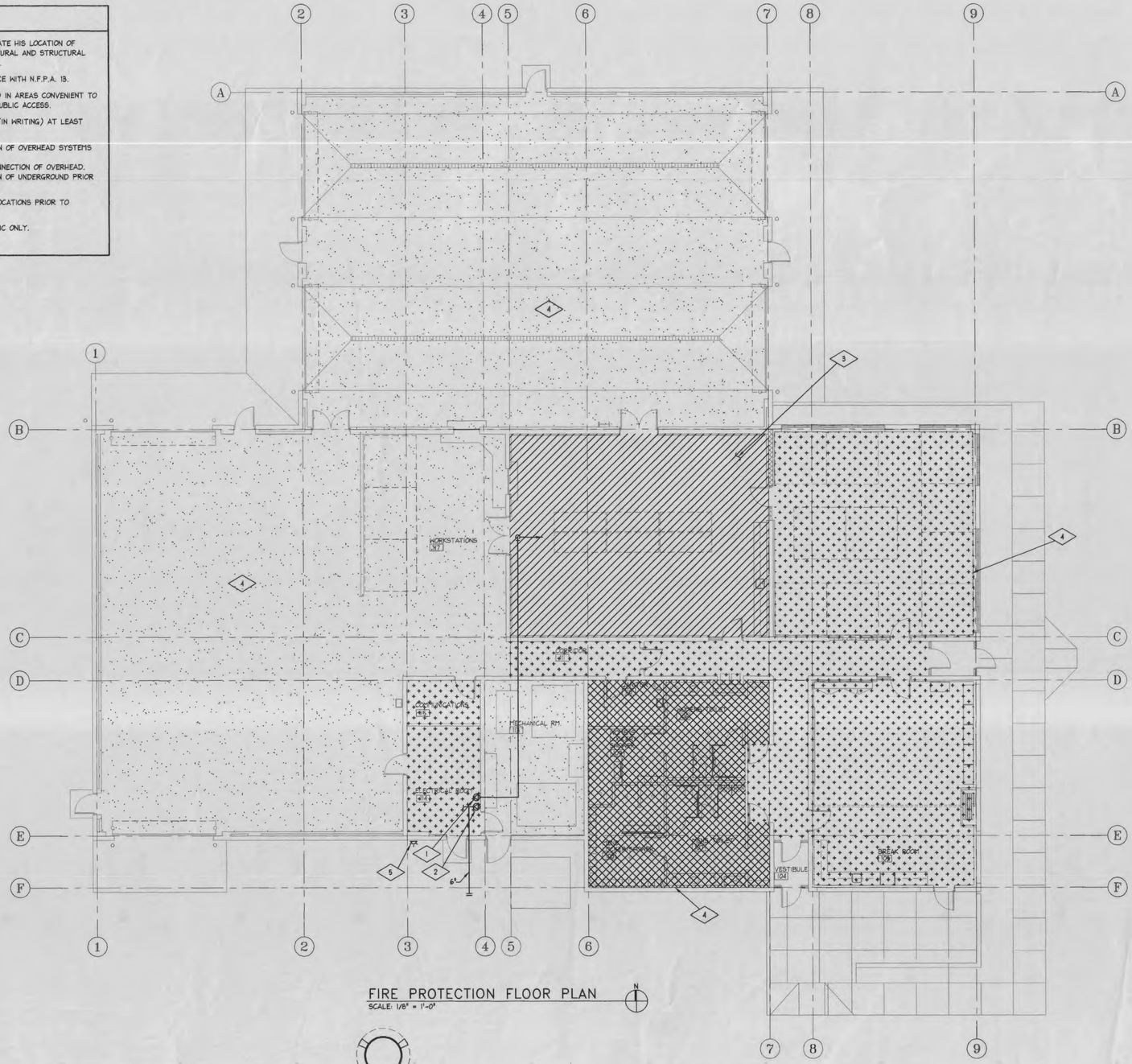

FIRE PROTECTION FLOOR PLAN

SCALE: 1/8" = 1'-0"

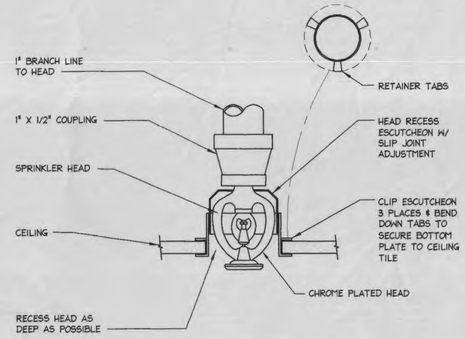

SEMI-RECESSED SPRINKLER HEAD DETAIL

NOT TO SCALE — 3 FP2.1

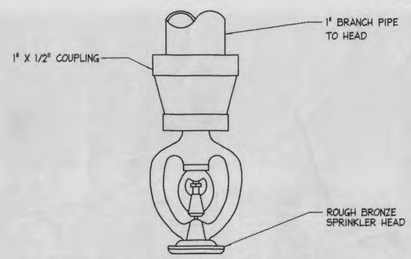

NOTE:
EXACT LOCATION OF SPRINKLER HEADS MUST BE COORDINATED WITH THE REFLECTED CEILING PLAN AND MUST BE ACCEPTABLE TO THE CONTRACTING OFFICER.

SPRINKLER HEAD DETAIL

NOT TO SCALE — 4 FP2.1

REFERENCE NOTES

1. PRE-ACTION FIRE SPRINKLE RISER. SEE DETAIL 1/FP2.1.
2. WET PIPE FIRE SPRINKLER RISER. SEE DETAIL 2/FP2.1.
3. PRE-ACTION FIRE SPRINKLER SYSTEM.
4. EXACT NUMBER & LOCATION OF HEADS IN MECHANICAL SPACES MUST BE CO-ORDINATED WITH STRUCTURE AND EQUIPMENT, DUCTWORK, PIPING AND RELATED OBSTRUCTIONS.
5. FIRE DEPT. CONNECTION & ALARM BELLS. SEE ARCHITECTURAL ELEVATIONS FOR EXACT LOCATION.

GENERAL NOTES

LEGEND

- LIGHT HAZARD OCCUPANCY, EXPOSED STRUCTURE PENDANT TYPE HEADS, ROUGH BRONZE FINISH. SEE 4/FP2.1.
- LIGHT HAZARD OCCUPANCY, LAY-IN CEILING SEMI-RECESSED CHROME PLATED HEADS. PRE-ACTION HEADS REQUIRED.
- LIGHT HAZARD OCCUPANCY, LAY-IN CEILING SEMI-RECESSED CHROME PLATED HEADS. SEE 3/FP2.1.
- LIGHT HAZARD OCCUPANCY, GYP-BOARD CEILING. SEMI-RECESSED CHROME PLATED HEADS. SEE 3/FP2.1.

AIR NATIONAL GUARD — CIVIL ENGINEERING

UTAH AIR NATIONAL GUARD BASE

785 NORTH 2200 WEST
SALT LAKE CITY, UTAH
84116-2999

FIRE PROTECTION PLAN

REGISTERED PROFESSIONAL ENGINEER — 117077 — WAYNE CLARK PETERSON — STATE OF UTAH

ELECTRONIC SECURITY SQUADRON FACILITY – UTAH AIR NATIONAL GUARD
PROJ. NO. USEB 939661

FFKR Architects Planners
132 Pierpont Ave. Suite 200
Salt Lake City, Utah 84101
Telephone 801 521-8183

DATE: APRIL 1, 1996
REVISED:
CHECKED BY: P.W.L.
DRAWN BY: G.K.S.
DRAWING NO: FP2.1

PLANT SCHEDULE

SYM	BOTANICAL NAME	COMMON NAME	SIZE	COND
	TREES			
A	Platanus acerifolia	London Planetree	2" C.	B&B
B	Morus alba	Fruitless Mulberry	2" C.	B&B
C	Pinus nigra	Austrian Pine	6' H.	B&B
D	Gleditsia t Shademaster	Shademaster Hon.	2" C.	B&B
	SHRUBS			
E	Euonymus a. com.	Burning Bush	5 G.	Can
F	Pot. f. Gold Drop	Gold Drop Cinque.	5 G.	Can
G	Spiraea b. A. W.	Ant. Nat. Spiraea	5 G.	Can
H	Taxus Dk & Spr.	D. & S. Yew	5 G.	Can
	GROUND COVER			
J	Euonymus f. col.	P.L. Win. Creeper	1 G.	Can
K	Hypericum reptans	Cr.St. J.'s Wort	4"	Pot
L	Vinca major	Periwinkle	4"	Pot
	PERENNIAL			
M	Hemerocallis	Daylily (r & y)	1 G.	Can
N	Iris pseudacorus	Yellow Iris	1 G.	Can
	VINES			
Q	Parthenocissus tri.	Boston Ivy	1 G.	Can

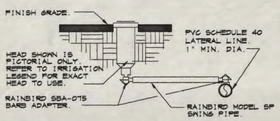

SWING JOINT

Not to Scale — 1 / L1

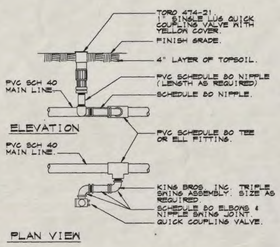

QUICK COUPLER

Not to Scale — 2 / L1

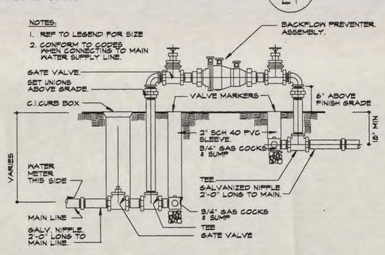

BACKFLOW PREVENTER

Not to Scale — 3 / L1

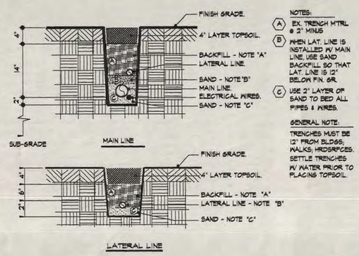

TRENCH DETAIL

Not to Scale — 4 / L1

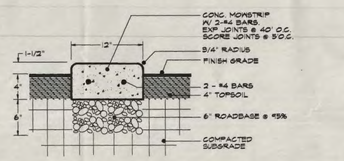

MOWSTRIP

Not to Scale — 8 / L1

IRRIGATION LEGEND

SYM	DESCRIPTION
	Rainbird 1804-PRS-15F
	Rainbird 1804-PRS-15TQ
	Rainbird 1804-PRS-15H
	Rainbird 1804-PRS-15Q
	Rainbird 1804-PRS-15SST
	Rainbird 1804-PRS-15EST
	Rainbird 1812-PRS-12F
	Rainbird 1812-PRS-12H
	Rainbird 1812-PRS-12Q
	Rainbird 1812-PRS-15SST
	Rainbird 1812-PRS-15EST
	Rainbird EFB-CP Series Elec. Remote Control Valve (1")
	Rainbird EFB-CP Series Elec. Remote Control Valve (1 1/2")
	Rainbird EFB-CP Series Elec. Remote Control Valve (2")
	Lateral Line - PVC Sch 40, S.A.S. (2" pvc, 1", 1 1/4", 1 1/2", 2")
	Main Line - 2" PVC Sch 40, 18" Bury. Provide thrust blocks at all changes in direction.

14 Guage U.F. Direct Burial Wire. Red-Lan,Blue-Struds,White-Ground. Connect to controllers as indicated on the drawings. At all locations where control wires leave the Main Line trench, install wires in a 2" PVC Sch 40 conduit.

Quick coupler--Rainbird 44RC. Install inside valve box on upstream side of manifold.

Controller--Rainbird RC-1260C Electromechanical Controller

Backflow Preventer - 2" Conbraco (OR EQUAL) Series 40-100.

Sleeves - 4" PVC Sch 40 pipe. Glue joints as required.

ACCEPTABLE MFG'S FOR IRRIGATION PRODUCTS-MATERIALS:

TORO HUNTER NELSON

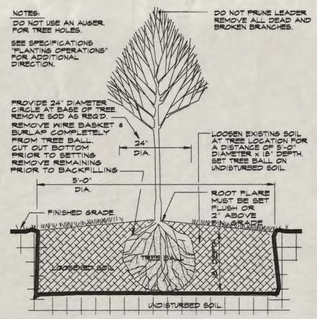

TREE PLANTING

Not to Scale — 6 / L1

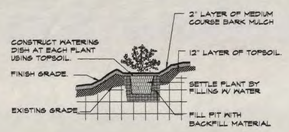

SHRUB PLANTING

Not to Scale — 7 / L1

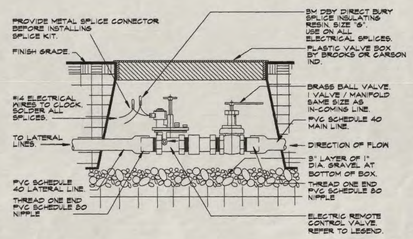

VALVE MANIFOLD

NOT TO SCALE — 5 / 11

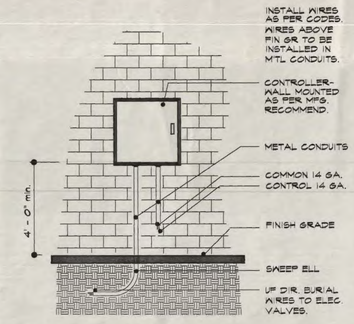

CONTROLLER

NOT TO SCALE — 9 / L1

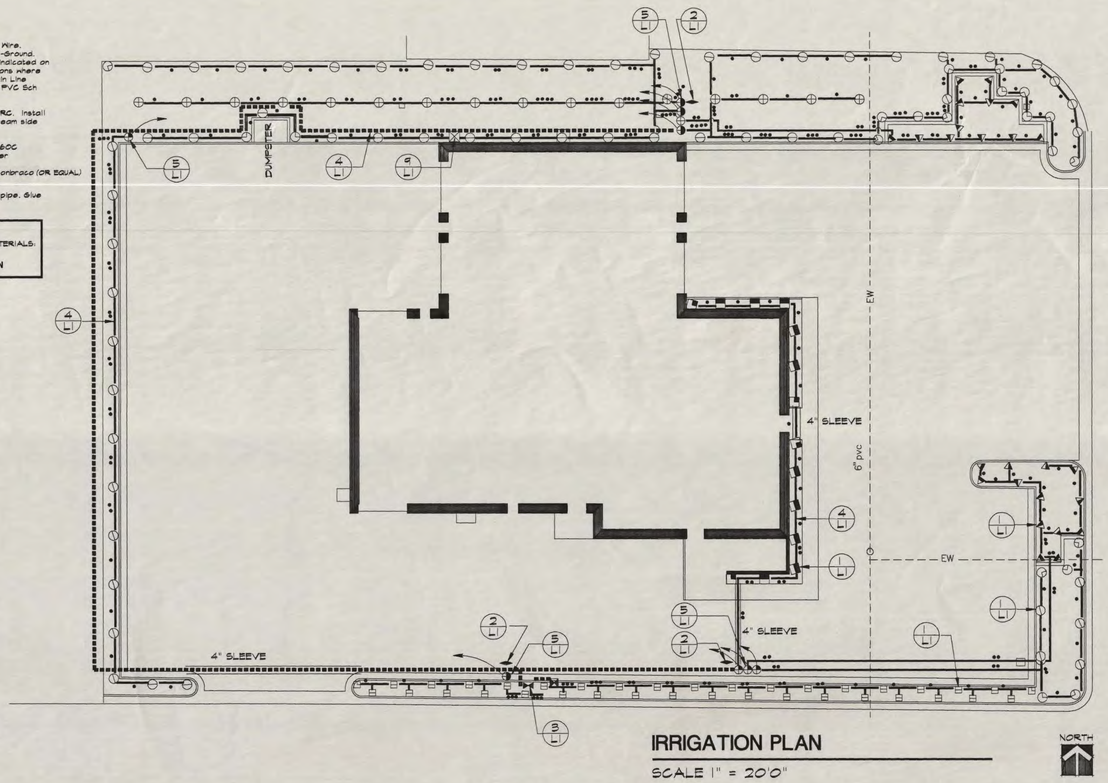

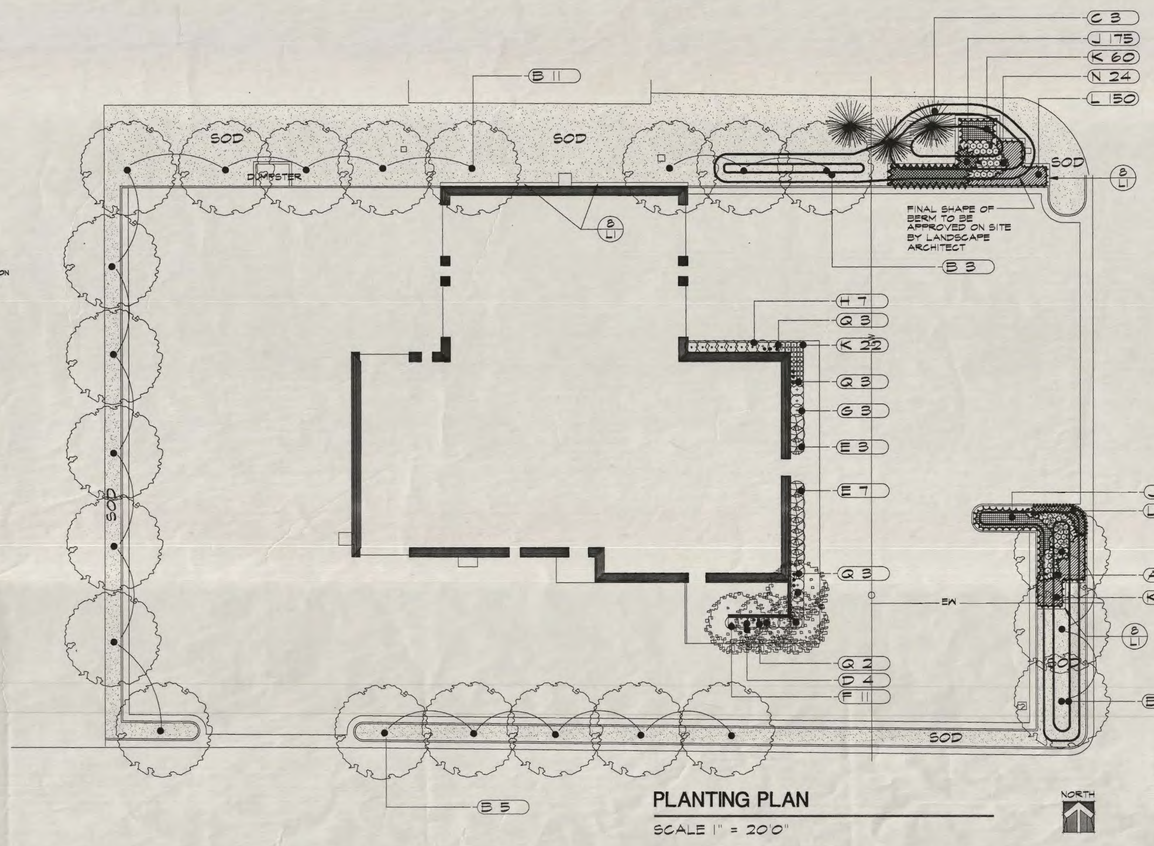

ALL LANDSCAPING TO BE ABI (ALTERNATIVE BID ITEM) #2

REFERENCE NOTES

1. Point of connection.
2. Empty 4" PVC Sch 40 conduit for electrical wires to controller.
3. Bury lat. line sleeve @ 12" depth to Flowline.
4. Bury main line sleeve @ 18" depth to Flowline.
5. Refer to electrical drawings for source of power to controllers. Install wires in metal conduit.
6. Locate pipes in planting areas

GENERAL NOTES

ELIMINATE ALL LANDSCAPING ITEMS ON SHEET L-1 & LA-1, UNLESS ABI #2 IS AWARDED, THEN THESE DOCUMENTS WILL APPLY.

LEGEND

AIR NATIONAL GUARD — CIVIL ENGINEERING

UTAH AIR NATIONAL GUARD BASE

785 NORTH 2200 WEST
SALT LAKE CITY, UTAH
84116-2999

LANDSCAPE ARCHITECT BRENT D MORRIS UTAH 88-10670-5301

ELECTRONIC SECURITY SQUADRON FACILITY — UTAH AIR NATIONAL GUARD
PROJ. NO. USEB 939661

FFKR Architects Planners // — 132 Pierpont Ave. Suite 200, Salt Lake City, Utah 84101, Telephone 801 521-6186

DATE: APRIL 1, 1996
REVISED:
DRAWN BY: BRENT
DRAWING NO: L-1

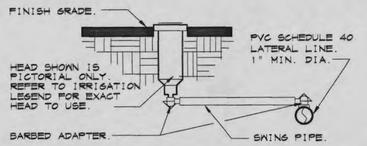

SWING JOINT — Not to Scale — 1 / LA-1

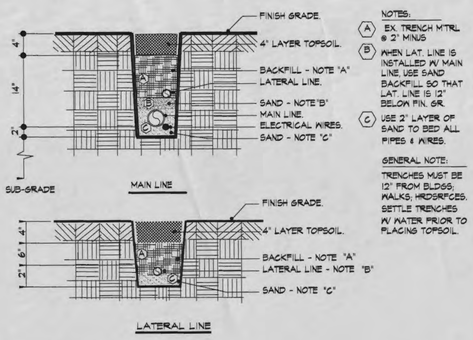

TRENCH DETAIL — Not to Scale — 2 / LA-1

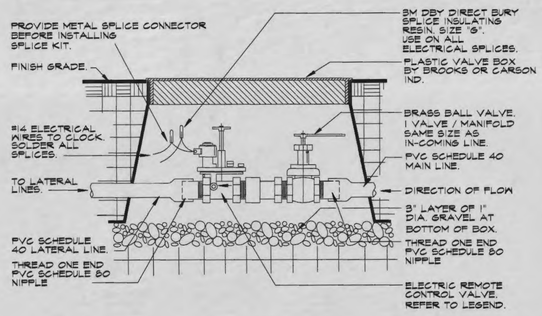

VALVE MANIFOLD — NOT TO SCALE — 3 / LA-1

IRRIGATION LEGEND

SYM DESCRIPTION

- ▶ Rainbird 1812-PRS-12F
- ▶ Rainbird 1812-PRS-12H
- ◓ Rainbird EFB-CP Series Elec. Remote Control Valve (1 1/2")
- ——— Lateral Line - PVC Sch 40. S.A.S 12" bury. —•— 1", —••— 1 1/4", —•••— 1 1/2".
- Ⓖ 14 Guage U.F. Direct Burial Wire. Red-LawnBlue-ShrubsWhite-Ground. Connect to controllers as indicated on the drawings. At all locations where control wires leave the Main Line trench, install wires in a 2" PVC Sch 40 conduit.
- □ Controller--Rainbird RC-C SERIES 12 STATION
- ⋈ Cut & cap existing lateral line
- ═══ Sleeves - 4" PVC Sch 40 pipe. Give joints as required.
- A--------O---- Ex. heads & lat.lines to remain

ACCEPTABLE MFG'S FOR IRRIGATION PRODUCTS MATERIALS:
TORO HUNTER NELSON

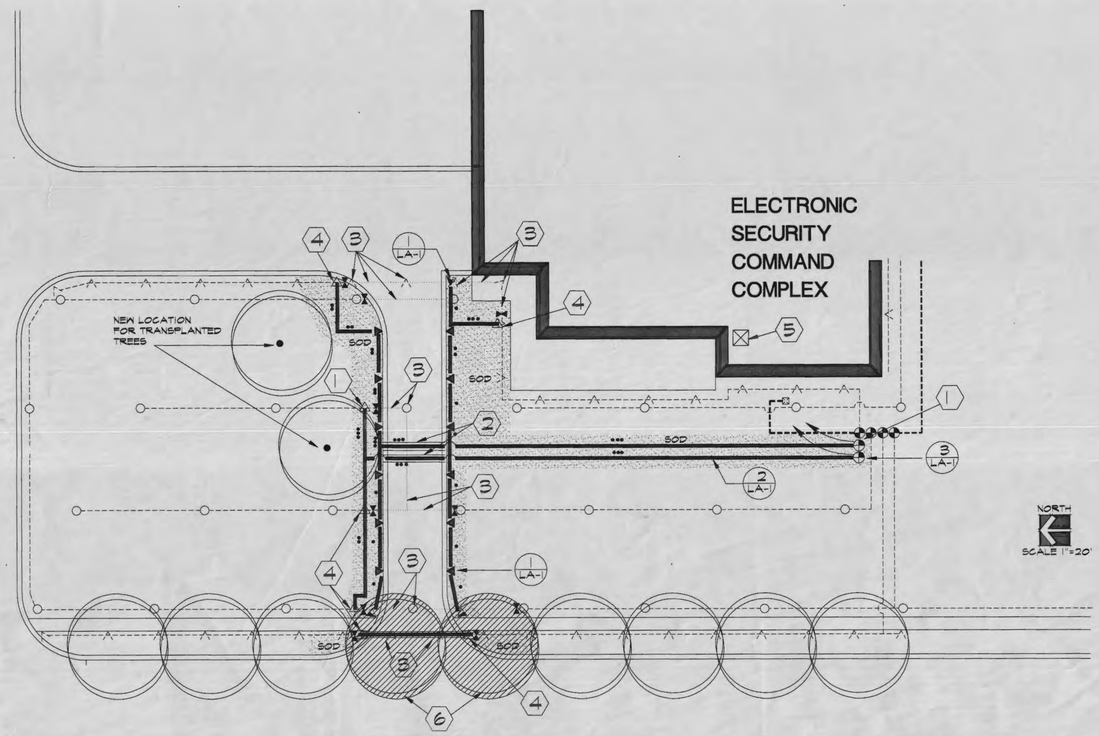

PLANTING / IRRIGATION PLAN

ALL LANDSCAPING TO BE ABI (ALTERNATIVE BID ITEM) #2

REFERENCE NOTES

1. Point of connection.
2. Bury lat. line sleeve @ 12" depth to Flowline.
3. Remove existing heads and lat. lines
4. Connect to ex. lateral lines at this approx. location
5. Remove existing controller and install new controller as per legend.
6. Transplant ex. trees to location shown on plan view.

GENERAL NOTES

ELIMINATE ALL LANDSCAPING ITEMS ON SHEET L-1 & LA-1, UNLESS ABI #2 IS AWARDED, THEN THESE DOCUMENTS WILL APPLY.

LEGEND

AIR NATIONAL GUARD — CIVIL ENGINEERING

UTAH AIR NATIONAL GUARD BASE
785 NORTH 2200 WEST
SALT LAKE CITY, UTAH
84116-2999

BRENT D MORRIS LANDSCAPE ARCHITECT UT No. 88-10570-5301

ELECTRONIC SECURITY COMMAND COMPLEX – ADDITION
PROJ. NO. USEB 939661

FFKR Architects Planners // 132 Pierpont Ave. Suite 200 Salt Lake City, Utah 84101 Telephone 801 521-6186

DATE: APRIL 1, 1996
REVISED:
DRAWN BY: BRENT
DRAWING NO: LA-1

AIR HANDLING UNIT SCHEDULE

SYMBOL	CFM	TOTAL S.P.	MOTOR (5)	HOT WATER HEATING COIL (1)					CHILLED WATER COOLING COIL (2)					MAKE & MODEL
				EAT	ROWS	GPM	MBH	FACE AREA	EAT	ROWS	GPM	MBH	FACE AREA	
AH-1	6340	3"	5 HP 208/3/60	8	1	23.0	230.0	14.6	80	4	44	220.0	14.61	VERTICAL DRAW-THRU DUNHAM BUSH VCS-14 (3)(4)
AH-2	8000	5"	15 HP 208/3/60	8	2	50.0	765.0	17.0	95	6	64	322.0	17.0	VERTICAL DRAW-THRU DUNHAM BUSH VCS-17 (3)(4)

NOTES:
(1) BASED UPON 20° ΔT WATER, 180° EWT AT THE COIL.
(2) BASED UPON 10° ΔT WATER, 48° EWT AT THE COIL.
(3) PROVIDE VARIABLE FREQUENCY DRIVE EQUAL TO ABB, SIEMENS OR HITACHI.
(4) INSTALL AIR HANDLING UNITS ON 4" HIGH CONC. PAD PROVIDED BY GENERAL CONTRACTOR. INSTALL AIR HANDLING UNITS ON SPRING TYPE VIBRATION ISOLATORS (1" MAX. DEFLECTION.)
(5) MOTOR SHALL BE MANUFACTURER'S ENERGY-EFFICIENT MODEL. TESTED IN ACCORDANCE WITH NEMA MGI-12A AND IEEE STD. 112, METHOD B.

GAS FIRED UNIT HEATER SCHEDULE

SYMBOL	TYPE	MBH INPUT	MBH OUTPUT	FLUE	CFM	MOTOR	MAKE & MODEL
UH-1	HORIZ.	100	80	4"	1250	1/15 H.P. 120 V. 1 PH.	REZNOR MODEL FE-100 (1)(2)(3)
UH-2	HORIZ.	25	20	4"	380	1/50 H.P. 120 V. 1 PH.	REZNOR MODEL FE-25 (2)(3)

NOTES:
(1) PROVIDE MANUAL SUMMER / WINTER SWITCH. MOUNT SWITCH ON WALL IN CONVIENENT LOCATION.
(2) CONTROL WITH WALL MOUNTED THERMOSTAT OR THERMOSENSOR PROVIDED BY ATC CONTRACTOR.
(3) MINIMUM 80% EFFICIENCY.

PUMP SCHEDULE

SYMBOL	TYPE	G.P.M.	FT. OF HEAD	MOTOR				MAKE & MODEL
				H.P.	RPM	VOLTS	PHASE	
P-1	HOT WATER	45	45'	1-1/2	1750	208	3	B & G SERIES 60 MODEL 1-1/2" A (1)(2)(3)
P-2	HOT WATER	45	45'	1-1/2	1750	208	3	B & G SERIES 60 MODEL 1-1/2" A (1)(2)(3)
P-3	CHILLED WATER	58	50'	3	1750	208	3	B & G SERIES 60 MODEL 2-1/2" F (1)(2)(3)
P-4	CHILLED WATER	58	50'	3	1750	208	3	B & G SERIES 60 MODEL 2-1/2" F (1)(2)(3)

NOTES:
(1) PUMPS TO BE BELL & GOSSET, ARMSTRONG, TACO OR EQUAL.
(2) PROVIDE SUCTION DIFFUSER ON INLET.
(3) PROVIDE TRIPLE DUTY VALVE ON DISCHARGE.

LOUVER & PENTHOUSE SCHEDULE

SYMBOL	SIZE	LOCATION	TYPE	HEIGHT	MAKE & MODEL
L-1	72" x 48"	WALL	GALV. STEEL	--	CARNES FKGA FLANGED FRAME
PH-1	42" x 42"	ROOF	ALUMINUM	21"	CARNES PMMA MITERED CORNERS (1)(2)
PH-2	42" x 42"	ROOF	ALUMINUM	21"	CARNES PMMA MITERED CORNERS (1)(2)
PH-3	48" x 24"	ROOF	ALUMINUM	21"	CARNES PMMA MITERED CORNERS (1)(2)(3)
PH-4	30" x 30"	ROOF	ALUMINUM	16"	CARNES GLAB (1)(4)
PH-5	48" x 48"	ROOF	ALUMINUM	20"	CARNES GLAB (1)(5)

NOTES:
(1) PROVIDE FACTORY FABRICATED 12" HIGH ROOF CURB.
(2) WEATHERPROOF CONSTRUCTION, DRAINABLE LOUVER BLADES, INSECT SCREEN.
(3) PROVIDE MOTORIZED OPPOSED BLADE DAMPERS INTERLOCKED WITH BOILER. DAMPERS TO OPEN WHEN POWER BURNER STARTS. DAMPERS TO CLOSE WHEN POWER BURNER SHUTS DOWN.
(4) PROVIDE MOTORIZED OPPOSED BLADE DAMPERS INTERLOCKED WITH AIR HANDLER AH-1. DAMPER TO MODULATE WITH FRESH AIR DAMPER ATTACHED TO AH-1.
(5) PROVIDE MOTORIZED OPPOSED BLADE DAMPER INTERLOCKED WITH EVAPORATIVE COOLER AC-1. DAMPER TO OPEN WHEN EVAPORATIVE COOLER(S) ENERGIZES.

MECHANICAL PIPING LEGEND AND SYMBOLS

HWS	HEATING WATER SUPPLY		BUTTERFLY VALVE
HWR	HEATING WATER RETURN		PRESSURE REDUCING VALVE
CHS	CHILLED WATER SUPPLY		CHECK VALVE
CHR	CHILLED WATER RETURN		STRAINER W/BLOWDOWN
G	GAS LINE		ATC VALVE
G	GAS VENT		ATC VALVE, 3-WAY
	BALL VALVE		CALIBRATED BALANCING VALVE
	GATE VALVE		UNION
	GLOBE VALVE		THERMOMETER
T	THERMOSTAT		PRESSURE GAUGE W/GAUGE COCK
MD	MOTORIZED DAMPER		PIPE DROP
FD	FIRE DAMPER		PIPE RISE
FS	FIRE/SMOKE DAMPER		CAPPED PIPE
PS	DUCT PRESSURE SENSOR		

REGISTER & GRILLE SCHEDULE

SYMBOL	NECK SIZE	SERVICE	LOCATION	MAKE & MODEL	REMARKS
R-1 / CFM	24" x 24"	RETURN	LAY-IN CEILING	TITUS - 8F	--
R-2 / CFM	6" x 6"	EXHAUST	CEILING	TITUS - 350RL	--
R-3 / CFM	24" x 8"	TRANSFER	CEILING	TITUS - 350RL	--
R-4 / CFM	18" x 12"	TRANSFER SUPPLY	GYP. BOARD CEILING	TITUS - 355FL	ALUMINUM CONSTRUCTION
R-5 / CFM	12" x 10"	EXHAUST	GYP. BOARD CEILING	TITUS - 355FL	ALUMINUM CONSTRUCTION
R-6 / CFM	24" x 8"	TRANSFER	WALL	TITUS - 350RL	LOCATE 12'-0" A.F.F.
R-7 / CFM	30" x 12"	SUPPLY	SIDE OF DUCT	TITUS - DL	--
R-8 / CFM	12" x 12"	EXHAUST	CEILING	TITUS - 350RL	--
R-9 / CFM	12" x 12"	COMBUSTION AIR TRANSFER	WALL	TITUS - 350RL	LOCATE 8'-0" A.F.F.
DG-1	12" x 12"	TRANSFER SUPPLY	DOOR	TITUS - T 700	PROVIDE FLANGE ON BOTH SIDES OF DOOR

NOTES:

DIFFUSER & GRILLE SCHEDULE

SYMBOL	TYPE	NECK SIZE	LOCATION	AIR PATTERN	MAKE & MODEL
D-1 / CFM	SUPPLY ALUMINUM	48" x 18"	DUCT MOUNTED	2-WAY	TITUS 300 FS
D-2 / CFM	SUPPLY STEEL	12"ø	CEILING	4 - WAY	TITUS TDC
D-3 / CFM	SUPPLY STEEL	10"ø	CEILING	4 - WAY	TITUS TDC

NOTES: KRUEGER, BARBER - COLEMAN, METAL AIRE CONSIDERED EQUAL.

EXHAUST FAN SCHEDULE (4)

SYMBOL	SERVICE	TYPE	DRIVE	CONT	C.F.M	EST. TSD.	MOTOR	MAKE & MODEL
EF-1	MENS RESTROOM	CENT.	BELT	WALL SWITCH	680	.25"	1/6 HP 115/1/60	COOK 120 C2B
EF-2	WOMENS RESTROOM	CENT.	BELT	WALL SWITCH	680	.25"	1/6 HP 115/1/60	COOK 120 C2B
EF-3	BREAK ROOM	CENT.	BELT	WALL SWITCH	600	.25"	1/6 HP 115/1/60	COOK 120 C2B
EF-4	ELEC. ROOM	CENT.	BELT	T-STAT	350	.25"	1/6 HP 115/1/60	COOK 120 C2B
EF-5	STORAGE BAY	CENT.	BELT	AUTO	4000	.75"	1-1/2 HP 460/3Ø	COOK 245 C8B WITH VFD (2)
EF-6	STORAGE BAY	CENT.	BELT	AUTO	4000	.75"	1-1/2 HP 460/3Ø	COOK 245 C8B WITH VFD (2)
EF-7	MECH. ROOM	CENT.	BELT	T-STAT	1200	.25"	1/6 HP 115/1/60	COOK 120 C2B
EF-8	JANITORS CLOSET	CENT.	DIRECT	SWITCH	100	.25"	1/20 HP 115/1/60	COOK GEM II (3)

NOTES:
(1) EXHAUST FANS SHALL BE PENN, GREENHECK, JENN-AIRE, ACME OR EQUAL.
(2) PROVIDE VARIABLE FREQUENCY DRIVE. EQUAL TO ABB, SIEMENS OR HITACHI.
(3) PROVIDE ROOF JACK FOR EXHAUST DUCT.
(4) ALL EXHAUST FANS SHALL BE U.L. LISTED.

V.A.V. REHEAT BOX SCHEDULE

SYMBOL	COOLING C.F.M.	MINIMUM C.F.M.	N.C. AT 1.0" S.P.	BOX INLET	BOX OUTLET	HEATING MBH	COIL CONN.	MAKE & MODEL
VAV-1	600	60	50	8"ø	12" x 12"	10.0	3/4"	TITUS AESU-3000
VAV-2	1000	100	50	10"ø	14" x 12"	15.0	3/4"	TITUS AESU-3000
VAV-3	2100	210	50	14"ø	16" x 14"	30	1"	TITUS AESU-3000
VAV-4	2800	280	50	16"ø	16" x 16"	38	1"	TITUS AESU-3000

NOTES:
(1) VAV REHEAT BOX TO BE COMPLETE WITH FACTORY MOUNTED AND TESTED DDC CONTROLLER, TRANSFORMER, AND LOW VOLTAGE DAMPER ACTUATOR.
(2) PROVIDE 2-ROW HOT WATER REHEAT COILS FOR ALL VAV BOXES.
(3) ALL POWER AND CONTROL WIRING TO VAV BOXES BY ATC CONTRACTOR.
(4) SEE DETAIL 1/M5.2.

MECHANICAL EQUIPMENT SCHEDULE

CH-1 CHILLER. FACTORY FABRICATED AND PACKAGED CHILLER. 39.8 TONS TOTAL CAPACITY AT 95 DEG F AMB, 55 DEG F ENT, 45 DEG F LNT. 95 GPM FLOWRATE. CHILLER TO HAVE TWO (2) RECIPROCATING COMPRESSORS WITH SEPARATE REFRIGERATION CIRCUITS, UNLOADING CAPABILITY WITH 25 PERCENT MINIMUM LOAD CAPACITY ON ONE COMPRESSOR. UNIT TO BE COMPLETE WITH MICROPROCESSOR OR COMPUTER CONTROL, LOW AMBIENT START AND OPERATION CONTROL, INCORPORATING STAGING, LOADING, LWT AND EWT MONITORING, ALL REQUIRED SAFETY AND AUTOMATIC CUTOUTS FOR HIGH AND LOW REFRIGERANT PRESSURE, LOW OIL PRESSURE, FREEZE AND OPERATING THERMOSTATS. REFRIGERATION CIRCUITS TO BE FURNISHED WITH FILTER DRYERS, SOLENOID VALVES, MOISTURE INDICATING SIGHT GLASS, AND THERMAL EXPANSION VALVES. EER=10.0, U.L. LISTED.
UNIT TO BE INSTALLED ON A 4" HIGH CONCRETE PAD PROVIDED BY THE GENERAL CONTRACTOR. MECHANICAL CONTRACTOR TO PROVIDE AND INSTALL NEOPRENE VIBRATION ISOLATORS.
SEE DRAWINGS AND SPECIFICATIONS FOR INSTALLATION AND ADDITIONAL REQUIREMENTS.
MANUFACTURER: DUNHAM AND BUSH INC.
MODEL NO: ACDR-046
ELECTRICAL: 208 V, 3 PH, 188 MCA, 250 MFS, 169 RLA
NOMINAL SIZE: 101" X 86" X 80"
WEIGHT: 1800 LBS

OTHER APPD MFGRS: TRANE, GOVERNAIR, OR TSI.

B-1 BOILER. FACTORY FABRICATED AND PACKAGED ASME CONSTRUCTED, STEEL FIREBOX TYPE. HOT WATER, NATURAL GAS FIRED, MODULATING FORCED DRAFT BURNER. 1120 MBH INPUT, 780 MBH NET WATER OUTPUT . BASED UPON .4 SF PER BOILER HP. THREE PASS FIREBOX, TOP SMOKE OUTLET WITH 7" DIA. FLUE. 2 HP FORCED DRAFT BURNER, 4" DIA. SUPPLY WITH 3" DIA RETURN CONNECTIONS.
BOILER TO BE COMPLETE WITH COMBUSTION PRESSURE CONTROL, TEMPERATURE GAUGE, TEMPERATURE CONTROLS, ASME TEMPERATURE AND PRESSURE RELIEF VALVE, HIGH AND LOW WATER CUT-OFFS FACTORY PIPED BLOWDOWNS AND ALL CONTROLS FOR AUTOMATIC OPERATION.
UNIT TO BE INSTALLED ON A 4" HIGH CONCRETE PAD PROVIDED BY THE GENERAL CONTRACTOR. SEE DRAWINGS AND SPECIFICATIONS FOR INSTALLATION AND ADDITIONAL REQUIREMENTS.
MANUFACTURER: BURNHAM
MODEL NO: 4F-107
ELECTRICAL: 1/2 HP, 120 V, 1 PH.
NOMINAL SIZE: 72" X 33" X 55"
WEIGHT: 3900 LBS

OTHER APPD MFGRS: BRYAN, AJAX OR RITE.

BS-1 BOILER STACK. U.L. LISTED, SECTIONAL TYPE, 7" DIAMETER DUAL WALL TYPE WITH STAINLESS STEEL INNER WALL, RATED FOR CONTINUOUS OPERATION AT 1000 DEGREES F. PROVIDE ROOF THIMBLE, STORM COLLAR, STACK TEMPERATURE GAUGE AND STACK CAP. EXTEND STACK 1'-0" ABOVE PARAPET WALL.
MANUFACTURER: METALBESTOS
MODEL NO: PS

OTHER APPD MFGRS: METAL FAB, STACKS INC.

ET-1 EXPANSION TANK. ASME STEEL TANK CONSTRUCTION, HEAVY DUTY BUTYL BLADDER DIAPHRAGM TYPE, HOT WATER, 22 GALLON ACCEPTANCE VOLUME, COMPLETE WITH DRAIN COCK, FACTORY AIR CHARGE 12 PSI.
UNIT TO BE INSTALLED ON A 4" HIGH CONCRETE PAD PROVIDED BY THE GENERAL CONTRACTOR. SEE DRAWINGS AND SPECIFICATIONS FOR INSTALLATION AND ADDITIONAL REQUIREMENTS.

MANUFACTURER: TACO
MODEL NO: CAX 84

OTHER APPD MFGRS: ARMSTRONG, BELL & GOSSETT.

ET-2 EXPANSION TANK. ASME STEEL TANK CONSTRUCTION, HEAVY DUTY BUTYL BLADDER DIAPHRAGM TYPE, CHILLED WATER, 22 GALLON ACCEPTANCE VOLUME, COMPLETE WITH DRAIN COCK, FACTORY AIR CHARGE 12 PSI.
UNIT TO BE INSTALLED ON A 4" HIGH CONCRETE PAD PROVIDED BY THE GENERAL CONTRACTOR. SEE DRAWINGS AND SPECIFICATIONS FOR INSTALLATION AND ADDITIONAL REQUIREMENTS.
MANUFACTURER: TACO
MODEL NO: CAX 84

OTHER APPD MFGRS: ARMSTRONG, BELL & GOSSETT.

AS-1 AIR SEPARATOR: HOT WATER IN-LINE, 190 GPM CAPACITY, 3" WATER INLET AND OUTLET, 1-1/4" AIR OUTLET WITH AUTOMATIC AIR VENT
SEE DRAWINGS AND SPECIFICATIONS FOR INSTALLATION AND ADDITIONAL REQUIREMENTS.
MANUFACTURER: TACO
MODEL NO: AC-3

OTHER APPD MFGRS: ARMSTRONG, BELL & GOSSETT.

AS-2 AIR SEPARATOR: CHILLED WATER IN-LINE, 190 GPM CAPACITY, 3" WATER WATER INLET AND OUTLET, 1-1/4" AIR OUTLET WITH AUTOMATIC AIR VENT
SEE DRAWINGS AND SPECIFICATIONS FOR INSTALLATION AND ADDITIONAL REQUIREMENTS.
MANUFACTURER: TACO
MODEL NO: AC-3

OTHER APPD MFGRS: ARMSTRONG, BELL & GOSSETT.

FC-1 FAN COIL UNIT. 200 CFM, 4.8 MBH 1 GPM, HOT WATER HEATING. U.L. LISTED. INTEGRAL, 3-SPEED FAN, THROW AWAY FILTERS IN FULLY RECESSED 18 GAUGE WALL CABINET, MOTOR/FAN ACCESS PANEL. INSTALL 5" ABOVE FLOOR.
MANUFACTURER: DUNHAM BUSH
MODEL NO: CR-2-FB
ELECTRICAL: 1/6 HP, 120 V, 1 PH.
NOMINAL SIZE: 30" x 9" x 25"
WEIGHT: 150 LBS

OTHER APPD MFGRS: AIRTHERM , MCQUAY, TRANE.

AC-1 EVAPORATIVE COOLER. SINGLE STAGE, DIRECT EVAPORATIVE, VRETICAL DISCHARGE, 12,000 ACFM AT 0.5" SP, 420 RPM, 12" THICK CELLULOSE MEDIA MODULES. GALVANIZED STEEL CONSTRUCTION WITH POLYESTER-EPOXY POWDER BASED COATING ON ALL PARTS CONTACTING WATER.
MOTOR SHALL BE MANUFACTURERS ENERGY EFFICIENT MODEL.
UNIT TO BE INSTALLED ON A 12" HIGH FACTORY FABRICATED ROOF CURB. MECHANICAL CONTRACTOR TO PROVIDE AND INSTALL NEOPRENE VIBRATION ISOLATORS BETWEEN CURB AND UNIT.
SEE DRAWINGS AND SPECIFICATIONS FOR INSTALLATION AND ADDITIONAL REQUIREMENTS.

MANUFACTURER: MASTERCOOL INC.
MODEL NO: MD-60B W/ TWO (2) DM-120 MEDIA MODULES
ELECTRICAL: 5 HP FAN, 208 V 3 PH AND TWO (2) PUMPS FRACTIONAL HP, 120 V, 1 PH EACH.
NOMINAL SIZE: 92" X 50" X 52"
WEIGHT: 1200 LBS

OTHER APPD MFGRS: ESSICK.

REFERENCE NOTES

GENERAL NOTES

1. MANUFACTURERS LISTED FOR MECHANICAL EQUIPMENT IS INTENDED TO BE DESCRIPTIVE, BUT NOT RESTRICTIVE. THOSE LISTED INDICATE A MINIMUM QUALITY OR CHARACTERISTICS SUBJECT TO COMPLIANCE WITH CONTRACT REQUIREMENTS. MANUFACTURERS LISTED ARE NOT ALL INCLUSIVE AND THE GOVERMENT IS NOT HARRANTING EXCLUSIVE USE OF THEIR PRODUCTS. THE CONTRACTOR MAY PROPOSE ANY AVAILABLE PRODUCT THAT COMPLIES WITH THE CONTRACT REQUIREMENTS.

LEGEND

AIR NATIONAL GUARD — CIVIL ENGINEERING

UTAH AIR NATIONAL GUARD BASE
785 NORTH 2200 WEST
SALT LAKE CITY, UTAH
84116-2999

MECHANICAL SCHEDULES

REGISTERED PROFESSIONAL ENGINEER — # 117077 — WAYNE CLARK PETERSON — STATE OF UTAH

ELECTRONIC SECURITY SQUADRON FACILITY – UTAH AIR NATIONAL GUARD
PROJ. NO. USEB 939661

FFKR Architects Planners
132 Pierpont Ave. Suite 200
Salt Lake City, Utah 84101
Telephone 801 521-6186

DATE: APRIL 1, 1996
REVISED:
CHECKED BY: P.W.L.
DRAWN BY: G.K.S.
DRAWING NO: M1.1

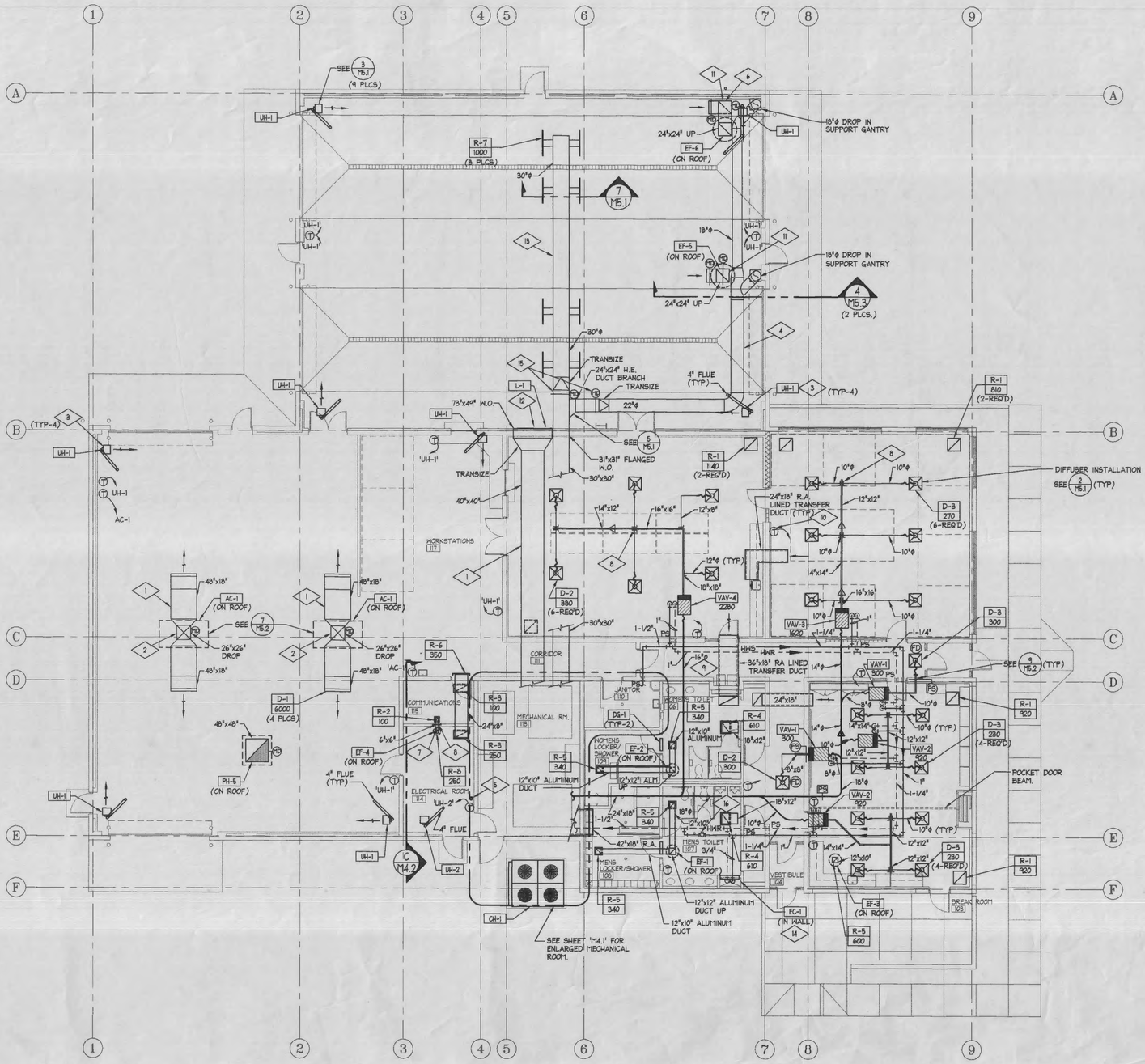

MECHANICAL FLOOR PLAN

SCALE: 1/8" = 1'-0"

MECHANICAL ABBREVIATIONS

AMB.	AMBIENT
A.F.F.	ABOVE FINISHED FLOOR
CFM	CUBIC FEET PER MINUTE
CONC.	CONCRETE
CONN.	CONNECTION
DEG.	DEGREES
DIA.	DIAMETER
EWT	ENTERING WATER TEMPERATURE
EXIST.	EXISTING
°F	DEGREES FAHRENHEIT
FT.	FEET
GA.	GAUGE
GAL.	GALLONS
G.C.	GENERAL CONTRACTOR
GPM	GALLON PER MINUTE
H	HEIGHT
H.P.	HORSE POWER
H.E.	HIGH EFFICIENCY
I.D.	INSIDE DIAMETER
IN.	INCHES
KW	KILOWATTS
LIN.	FT. LINEAR
LWT	LEAVING WATER TEMPERATURE
MAX.	MAXIMUM
MFGR.	MANUFACTURER
MIN.	MINIMUM
NO.	NUMBER
O.C.	ON CENTER
P.D.	PRESSURE DROP
PH	PHASE
PS	PIPE SLEEVE
PSI	POUNDS PER SQUARE INCH
PSIG	POUNDS PER SQUARE INCH GAUGE
REQ'D	REQUIRED
RPM	REVOLUTIONS PER MINUTE
SQ. FT.	SQUARE FOOT (SQUARE FEET)
SQ. IN.	SQUARE INCH (SQUARE INCHES)
TEMP.	TEMPERATURE
TYP.	TYPICAL
V	VOLTS
VERT.	VERTICAL
W	WIDTH
WG	WATER GAUGE
WT.	WEIGHT

REFERENCE NOTES

1. RUN DUCTWORK HIGH IN BETWEEN TRUSSES. REMOVE ANY TRUSS CROSS BRACING AFTER ROOF DECKING IS ATTACHED TO TRUSSES.
2. PROVIDE 50/50 SPLIT WITH TURNING VANES.
3. UNIT HEATERS TO BE MOUNTED 14'-0" ABOVE FINISHED FLOOR.
4. 22"ø HIGH PRESSURE SUPPLY AIR DUCT.
5. FIRE SPRINKLER RISER.
6. OFFSET DUCT AT ROOF.
7. 10"x10" EXHAUST DUCT. INSTALL GRILLE AT BOTTOM OF DUCT.
8. VOLUME DAMPER. (TYP.)
9. TRANSFER AIR DUCT ABOVE CEILING. SEE DETAIL 4/M5.2.
10. MOUNT THERMOSTAT 5'-0" A.F.F. (TYPICAL)
11. 24"x24" MOTORIZED ATC DAMPERS PROVIDED BY ATC CONTRACTOR. (TYP. OF 2 PER EXHAUST FAN)
12. MOUNT R.A. LOUVER HIGH BETWEEN TRUSSES.
13. RUN DUCTWORK HIGH BETWEEN TRUSSES.
14. RECESSED FAN COIL UNIT IN WALL. SEE DETAIL 1/M4.2
15. MOTORIZED ATC DAMPER PROVIDED BY ATC CONTRACTOR.
16. PROVIDE 1" CALIBRATED BALANCE VALVE BETWEEN HHS & HHR LINES.

GENERAL NOTES

LEGEND

AIR NATIONAL GUARD CIVIL ENGINEERING

UTAH AIR NATIONAL GUARD BASE

785 NORTH 2200 WEST
SALT LAKE CITY, UTAH
84116-2999

MECHANICAL FLOOR PLAN

REGISTERED PROFESSIONAL ENGINEER # 117077 WALTON CLARK PETERSON STATE OF UTAH

ELECTRONIC SECURITY SQUADRON FACILITY – UTAH AIR NATIONAL GUARD
PROJ. NO. USEB 939661

FFKR Architects Planners
132 Pierpont Ave. Suite 200
Salt Lake City, Utah 84101
Telephone 801 521-8185

DATE: APRIL 1, 1996
REVISED:
CHECKED BY: P.W.L.
DRAWN BY: G.K.S.

DRAWING NO: M2.1

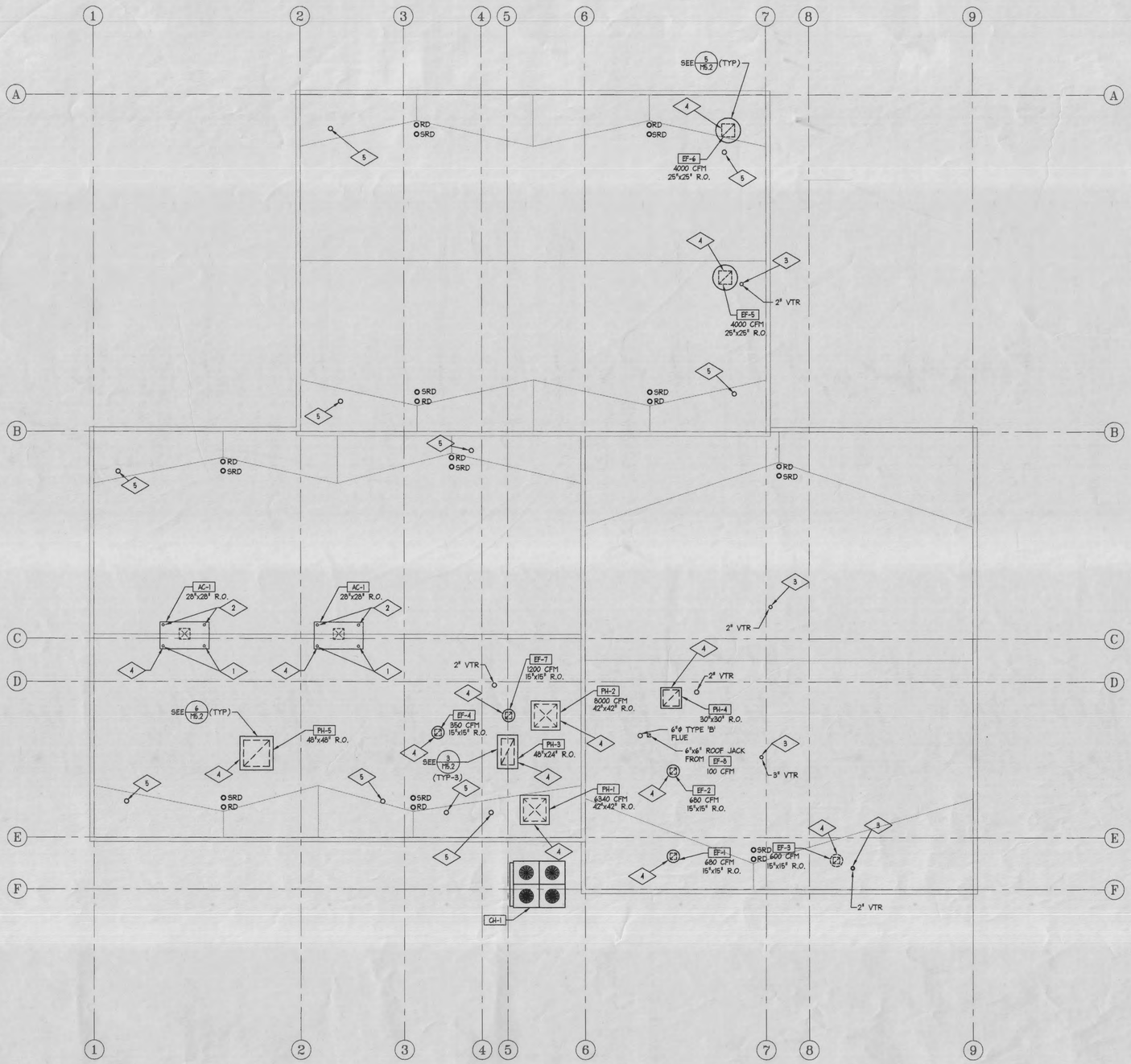

MECHANICAL ROOF PLAN

SCALE: 1/8" = 1'-0"

REFERENCE NOTES

1. PROVIDE 3/4" DIA. DRAIN CONNECTION. (TYP OF 2 EACH PER EVAPORATIVE COOLER)
2. PROVIDE 1/4" DIA. COPPER TUBE WATER CONNECTIONS. TYP OF 2 CONNECTIONS PER EVAPORATIVE COOLER)
3. PROVIDE FLASHING CONE. (TYP.)
4. FACTORY FABRICATED AND SOUND INSULATED ROOF CURB 12" HIGH.
5. 4"ø TYPE 'B' FLUE THROUGH ROOF. PROVIDE VENT FLUE CAP EQUAL TO BREIDERT "TYPE L".

GENERAL NOTES

LEGEND

AIR NATIONAL GUARD CIVIL ENGINEERING

UTAH
AIR
NATIONAL
GUARD
BASE

785 NORTH 2200 WEST
SALT LAKE CITY, UTAH
84116-2999

MECHANICAL ROOF PLAN

REGISTERED PROFESSIONAL ENGINEER # 170077 WAYNE CLARK PETERSON STATE OF UTAH

ELECTRONIC SECURITY SQUADRON FACILITY – UTAH AIR NATIONAL GUARD
PROJ. NO. USEB 939661

FFKR Architects Planners
132 Pierpont Ave. Suite 200
Salt Lake City, Utah 84101
Telephone 801 521-6183

DATE: APRIL 1, 1996	DRAWING NO: M3.1
REVISED:	
CHECKED BY: P.W.L.	
DRAWN BY: G.K.S.	

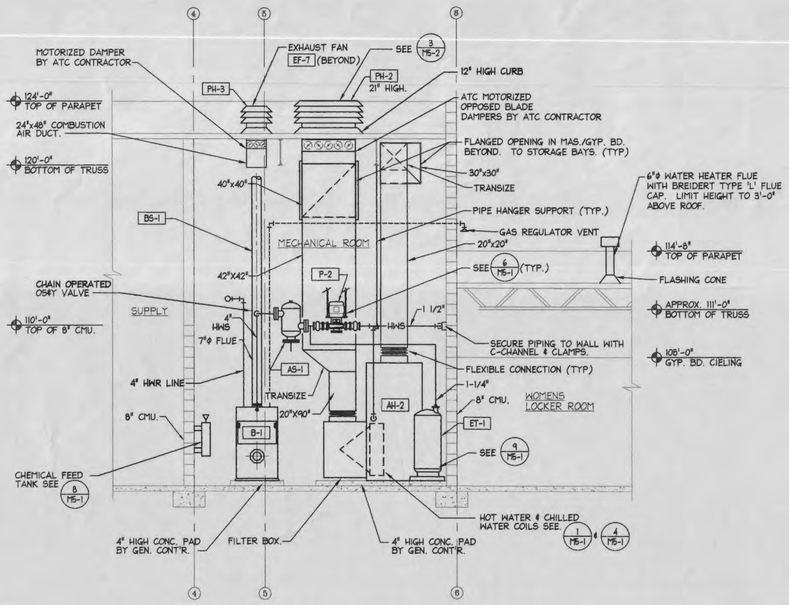

SECTION THRU MECHANICAL ROOM (A M4.1)

SCALE: 1/4" = 1'-0"

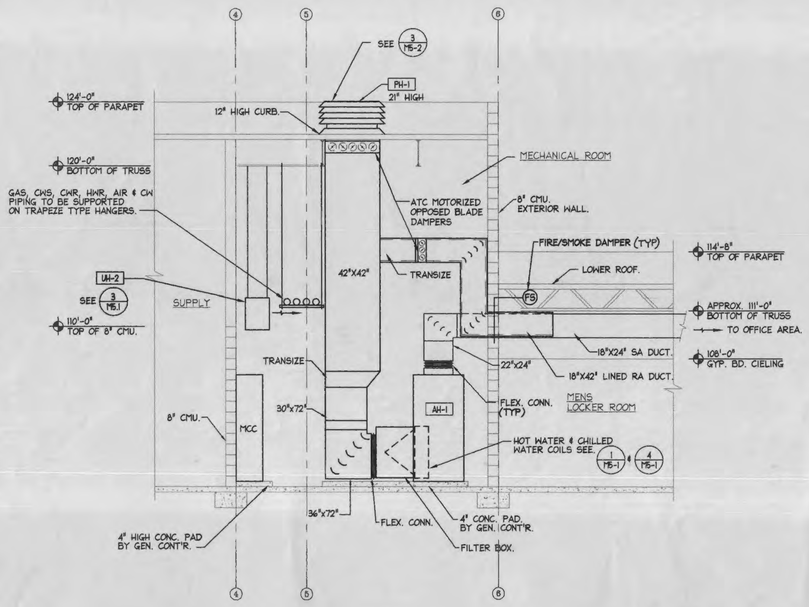

SECTION THRU MECHANICAL ROOM (B M4.1)

SCALE: 1/4" = 1'-0"

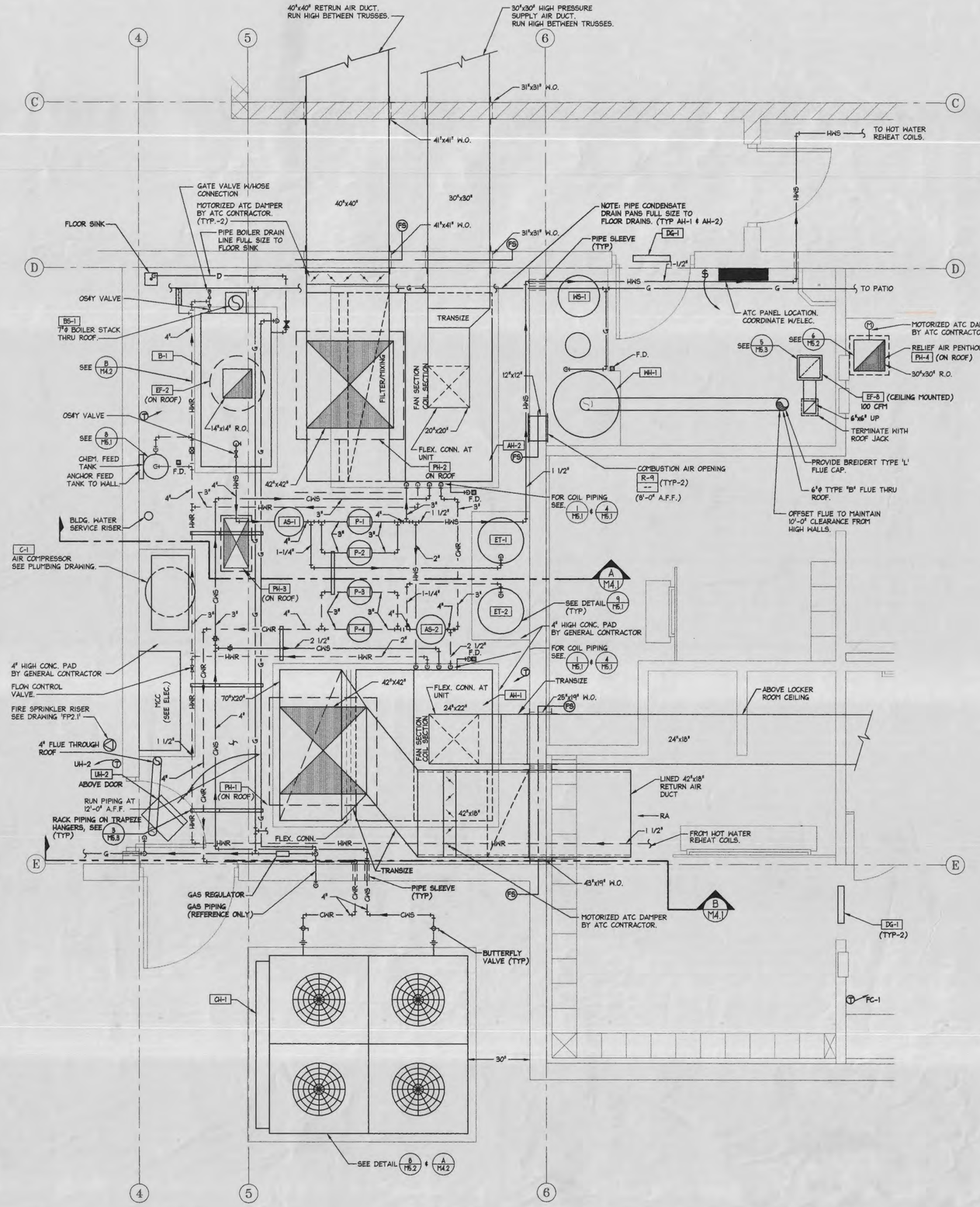

MECHANICAL ROOM PLAN

1/2" = 1'-0"

REFERENCE NOTES

1. FOR SEISMIC BRACING OF PIPING AND DUCTWORK REFER TO DRAWINGS M5.4 & M5.5.

GENERAL NOTES

LEGEND

AIR NATIONAL GUARD CIVIL ENGINEERING

UTAH AIR NATIONAL GUARD BASE

765 NORTH 2200 WEST
SALT LAKE CITY, UTAH
84116-2999

ENLARGED MECHANICAL ROOM

REGISTERED PROFESSIONAL ENGINEER # 117027 WAYNE CLARK PETERSON STATE OF UTAH

ELECTRONIC SECURITY SQUADRON FACILITY – UTAH AIR NATIONAL GUARD
PROJ. NO. USEB 939661

FFKR Architects Planners
132 Pierpont Ave. Suite 200
Salt Lake City, Utah 84101
Telephone 801 521-8183

DATE: APRIL 1, 1996
REVISED:
CHECKED BY: P.W.L.
DRAWN BY: C.K.S.

DRAWING NO: M4.1

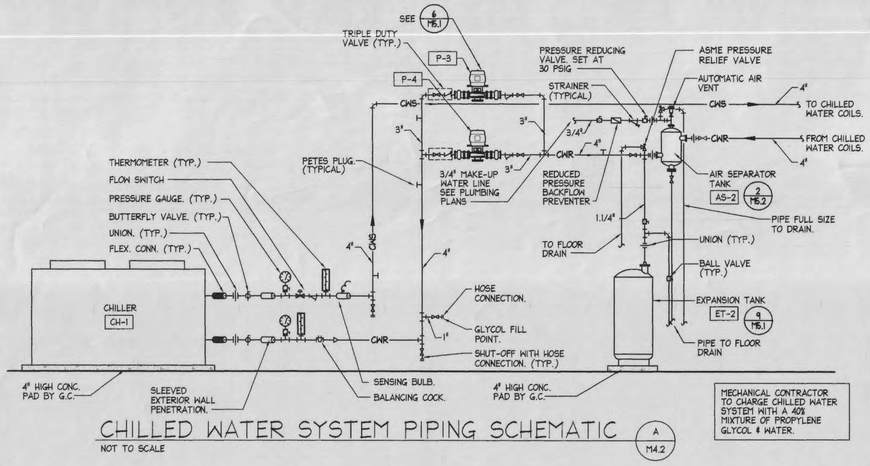

CHILLED WATER SYSTEM PIPING SCHEMATIC

NOT TO SCALE

A / M4.2

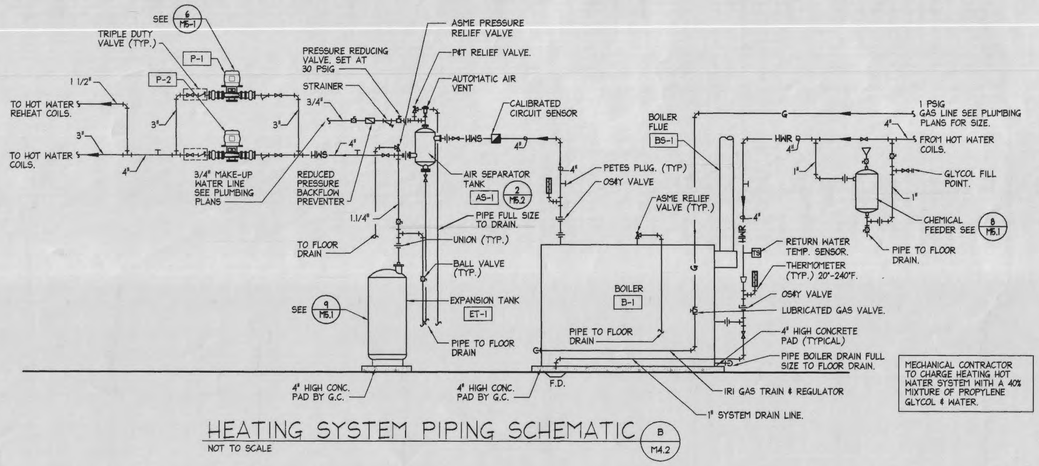

HEATING SYSTEM PIPING SCHEMATIC

NOT TO SCALE

B / M4.2

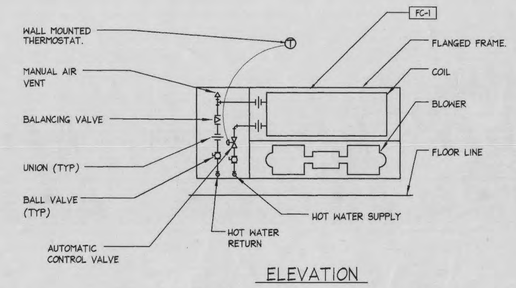

ELEVATION

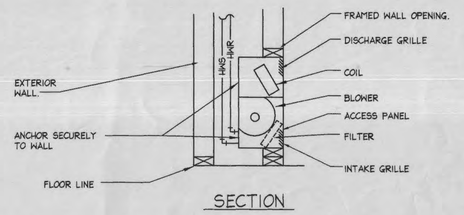

SECTION

FAN COIL UNIT INSTALLATION DETAIL

NOT TO SCALE

1 / M4.2

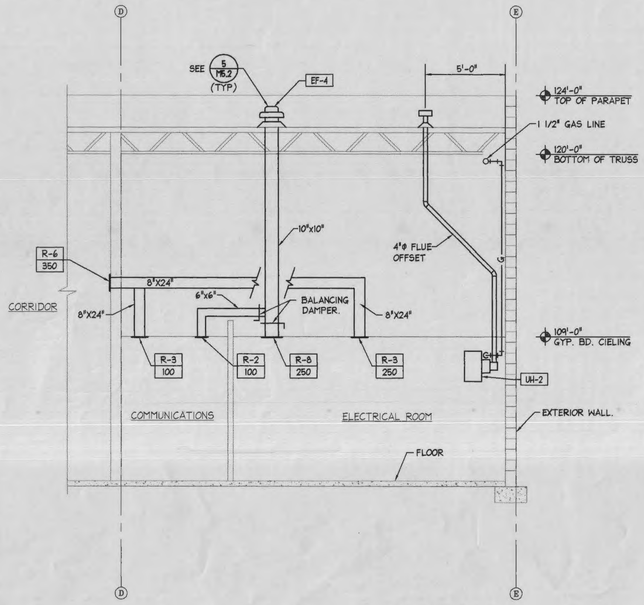

SECTION THRU ELEC/COMM. ROOMS

SCALE: 1/4" = 1'-0"

C / M4.2

REFERENCE NOTES

GENERAL NOTES

LEGEND

AIR NATIONAL GUARD — CIVIL ENGINEERING

UTAH AIR NATIONAL GUARD BASE

785 NORTH 2200 WEST
SALT LAKE CITY, UTAH
84116-2999

MECHANICAL SECTIONS

REGISTERED PROFESSIONAL ENGINEER — # 119077 WAYNE CLARK PETERSON — STATE OF UTAH

ELECTRONIC SECURITY SQUADRON FACILITY – UTAH AIR NATIONAL GUARD
PROJ. NO. USEB 939661

FFKR Architects Planners
132 Pierpont Ave. Suite 200
Salt Lake City, Utah 84101
Telephone 801 521-8186

DATE: APRIL 1, 1996
REVISED:
CHECKED BY: P.W.L.
DRAWN BY: G.K.S.

DRAWING NO: M4.2

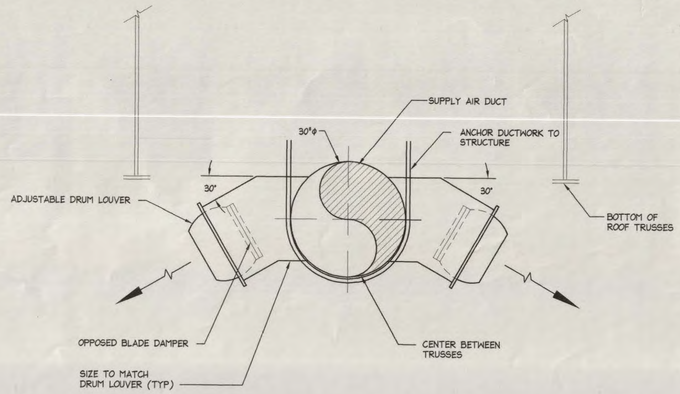

DRUM LOUVER DETAIL

NOT TO SCALE — 7 / M5.1

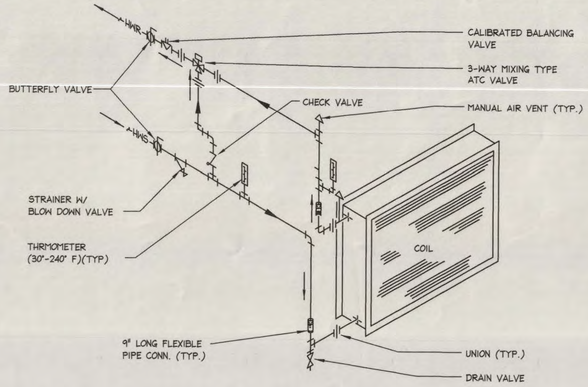

HEATING COIL PIPING SCHEMATIC

NOT TO SCALE — 4 / M5.1

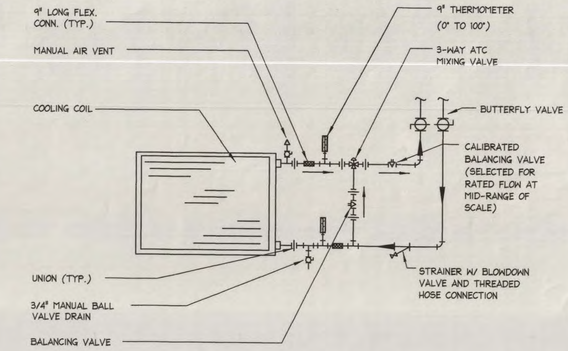

CHILLED WATER COIL PIPING

NOT TO SCALE — 1 / M5.1

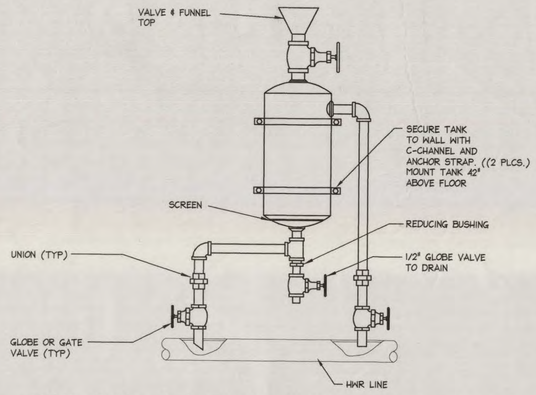

POT TYPE CHEMICAL FEEDER DETAIL

NOT TO SCALE — 8 / M5.1

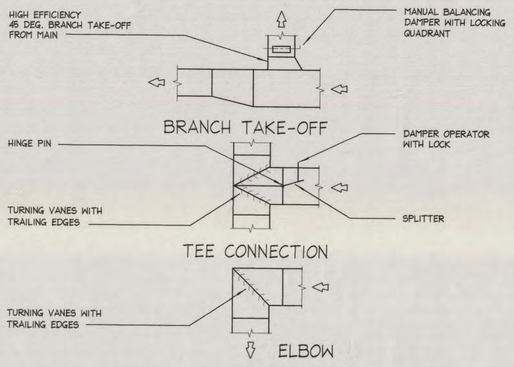

HIGH PRESSURE DUCT DETAILS

NOT TO SCALE — 5 / M5.1

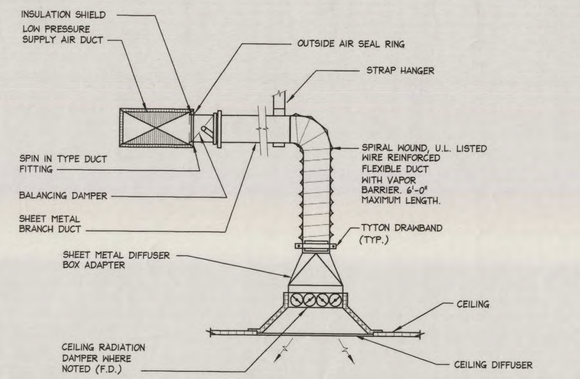

CEILING DIFFUSER INSTALLATION DETAIL

NOT TO SCALE — 2 / M5.1

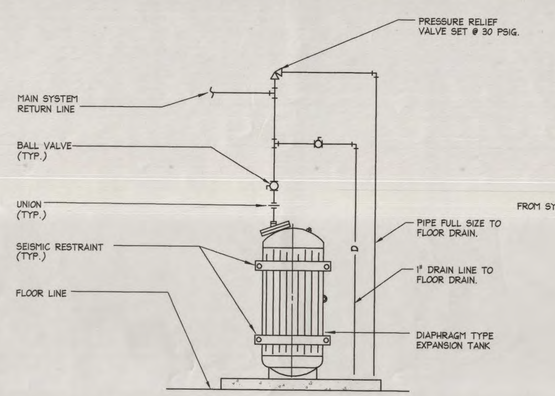

EXPANSION TANK PIPING DETAIL

NOT TO SCALE — 9 / M5.1

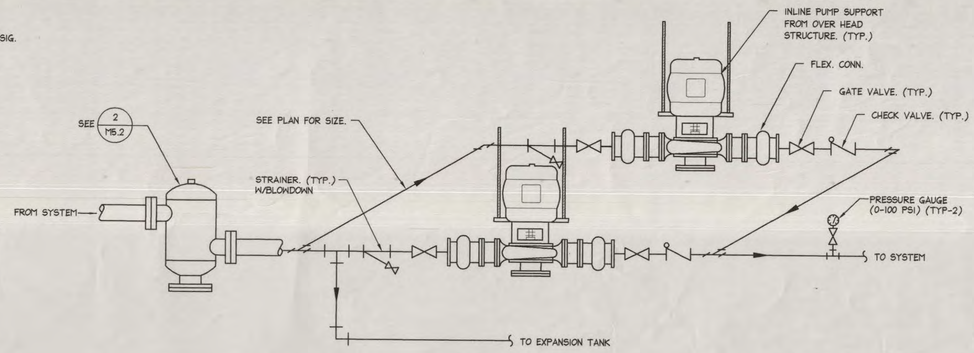

PUMP PIPING DETAIL

NOT TO SCALE — 6 / M5.1

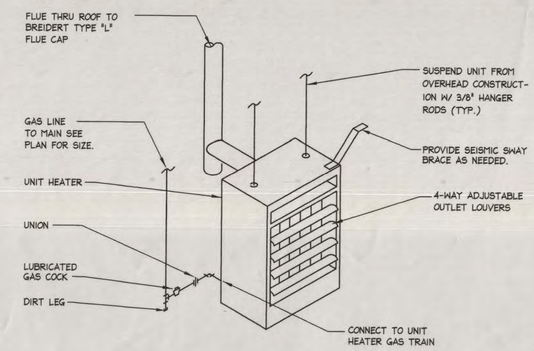

UNIT HEATER PIPING SCHEMATIC

NOT TO SCALE — 3 / M5.1

REGISTERED PROFESSIONAL ENGINEERS # 117077 WAYNE CLARK PETERSON STATE OF UTAH

ELECTRONIC SECURITY SQUADRON FACILITY – UTAH AIR NATIONAL GUARD
PROJ. NO. USEB 939661

FFKR Architects Planners II
132 Pierpont Ave. Suite 200
Salt Lake City, Utah 84101
Telephone 801 521-8183

REFERENCE NOTES

GENERAL NOTES

LEGEND

AIR NATIONAL GUARD — CIVIL ENGINEERING

UTAH AIR NATIONAL GUARD BASE

785 NORTH 2200 WEST
SALT LAKE CITY, UTAH
84116-2999

MECHANICAL DETAILS

DATE: APRIL 1, 1996
REVISED:
CHECKED BY: P.W.L.
DRAWN BY: G.K.S.

DRAWING NO: M5.1

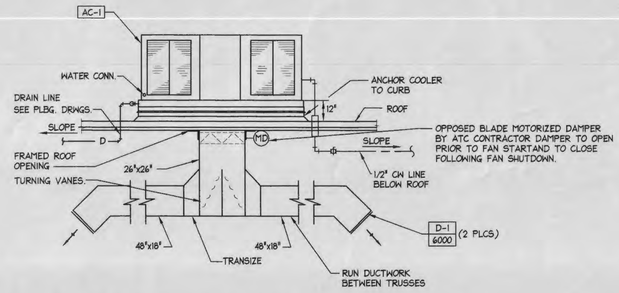

EVAPORATIVE COOLER INSTALLATION DETAIL (7 / M5.2)

NOT TO SCALE

RUN 1/4" COPPER WATER SUPPLY LINES TO ALL EVAPORATIVE COOLER CONNECTIONS. PROVIDE STOP & WASTE VALVE IN A CONVENIENT LOCATION BELOW ROOF FOR WINTER DRAIN DOWN.

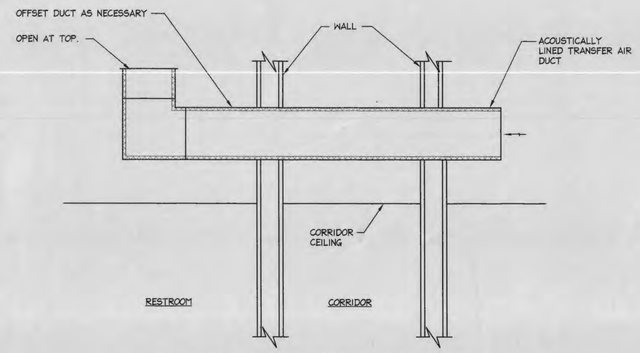

TYPICAL AIR TRANSFER BOOT (4 / M5.2)

NOT TO SCALE

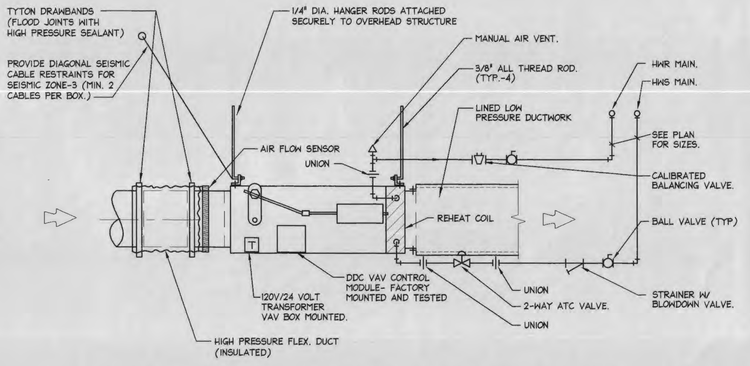

VAV REHEAT BOX INSTALLATION DETAIL (1 / M5.2)

NOT TO SCALE

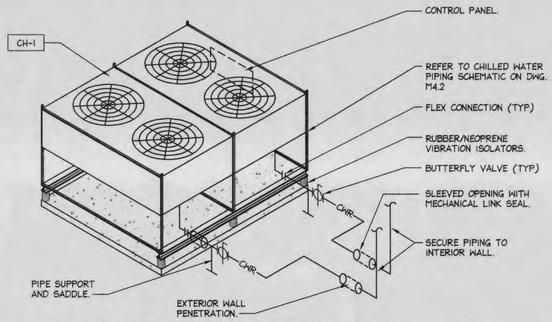

CHILLER PIPING SCHEMATIC (8 / M5.2)

NOT TO SCALE

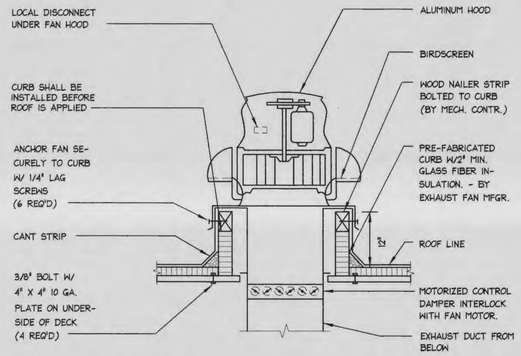

ROOF MOUNTED EXHAUST FAN DETAIL (5 / M5.2)

NOT TO SCALE

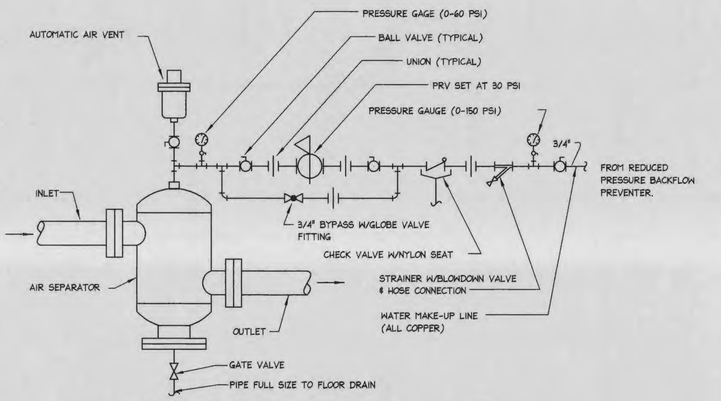

AIR SEPARATOR DETAIL (2 / M5.2)

NOT TO SCALE

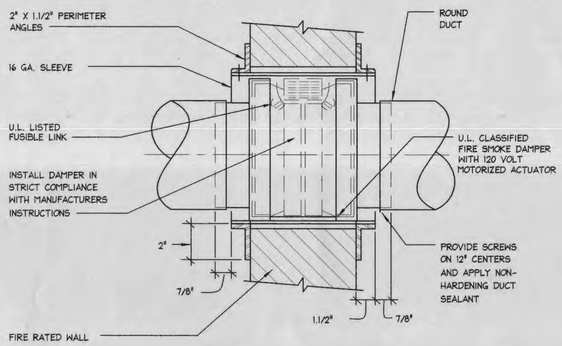

ROUND FIRE/SMOKE DAMPER DETAIL (9 / M5.2)

NOT TO SCALE

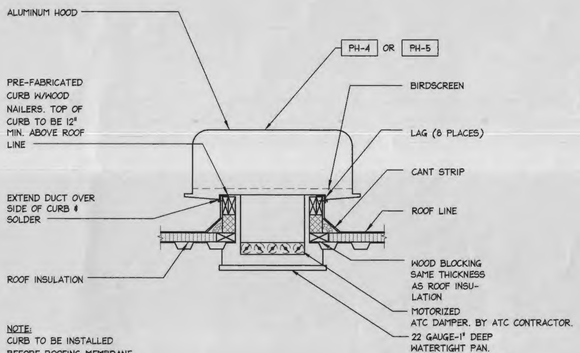

ROOF RELIEF HOOD DETAIL (6 / M5.2)

NOT TO SCALE

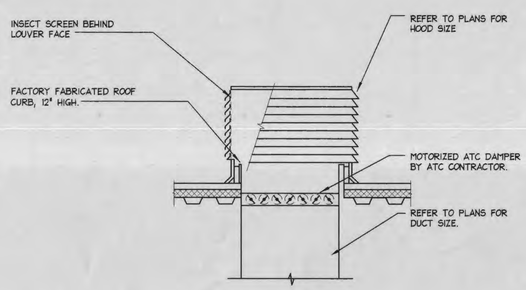

PENTHOUSE ROOF HOOD DETAIL (3 / M5.2)

NOT TO SCALE

REFERENCE NOTES

GENERAL NOTES

LEGEND

AIR NATIONAL GUARD — CIVIL ENGINEERING

UTAH AIR NATIONAL GUARD BASE

785 NORTH 2200 WEST
SALT LAKE CITY, UTAH
84116-2999

MECHANICAL DETAILS

REGISTERED PROFESSIONAL ENGINEER — 11/7/97 — WAYNE CLARK PETERSON — STATE OF UTAH

ELECTRONIC SECURITY SQUADRON FACILITY – UTAH AIR NATIONAL GUARD
PROJ. NO. USEB 939661

FFKR Architects Planners
132 Pierpont Ave. Suite 200
Salt Lake City, Utah 84101
Telephone 801 521-8183

DATE: APRIL 1, 1996
REVISED:
CHECKED BY: P.W.L.
DRAWN BY: W.K./G.K.S.

DRAWING NO: M5.2

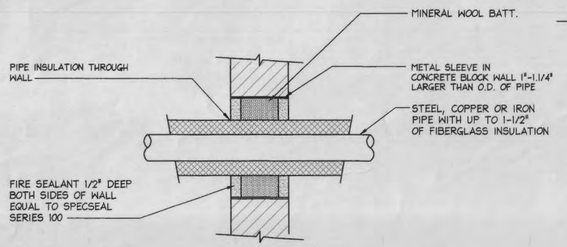

NOTE:
NO MULTIPLE PIPE PENETRATIONS ALLOWED. PACK AND CAULK EACH PIPE INDIVIDUALLY.

FIRE STOP PIPE PENETRATIONS

SCALE: 1/2"=1'-0"

7 / M5.3

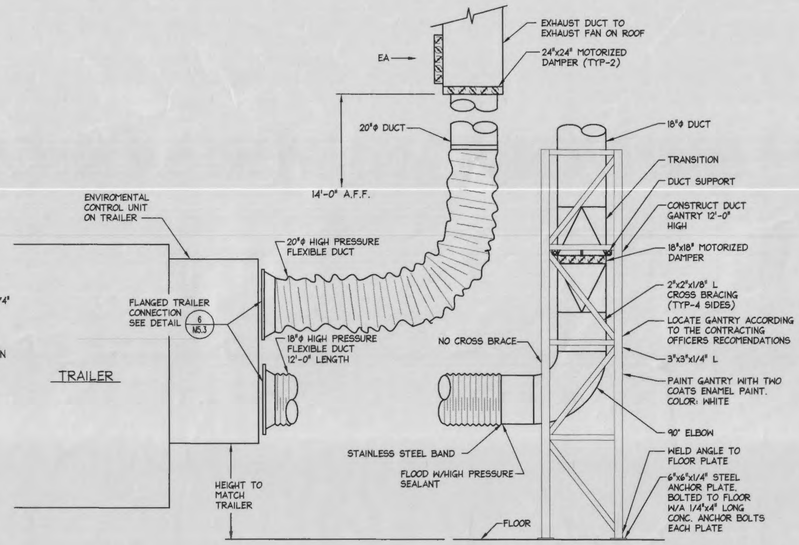

TRAILER SUPPLY AND EXHAUST DUCT DETAIL

SCALE: 1/2"=1'-0"

4 / M5.3

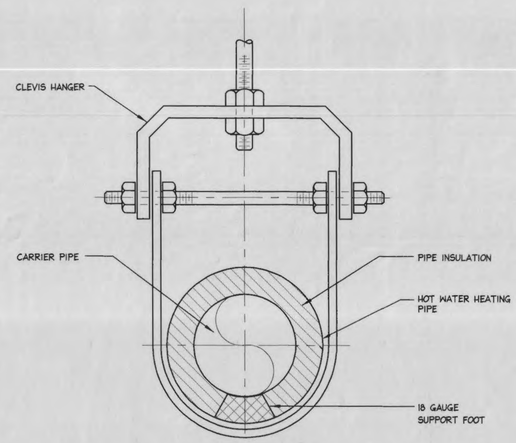

PIPE HANGER DETAIL

NOT TO SCALE

1 / M5.3

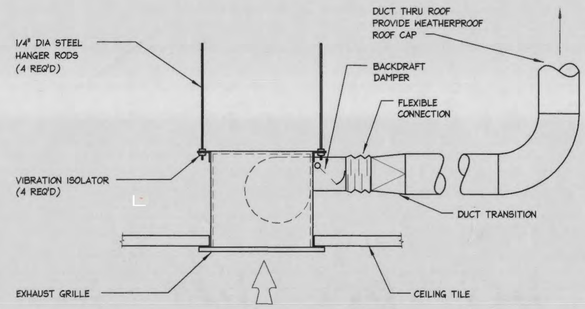

CEILING EXHAUST FAN DETAIL

NOT TO SCALE

5 / M5.3

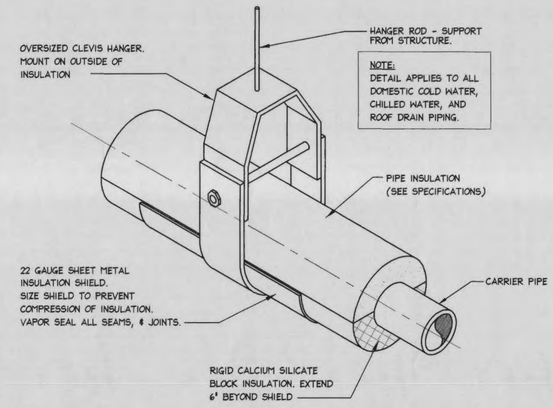

PIPE SUPPORT DETAIL (TYP)

NOT TO SCALE

2 / M5.3

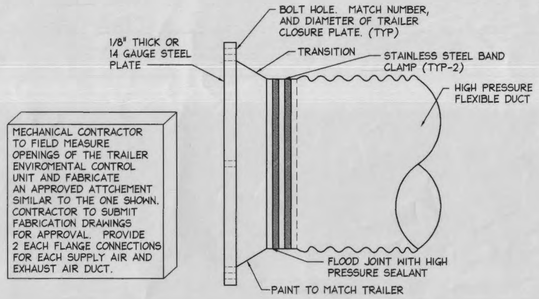

MECHANICAL CONTRACTOR TO FIELD MEASURE OPENINGS OF THE TRAILER ENVIROMENTAL CONTROL UNIT AND FABRICATE AN APPROVED ATTCHEMENT SIMILAR TO THE ONE SHOWN. CONTRACTOR TO SUBMIT FABRICATION DRAWINGS FOR APPROVAL. PROVIDE 2 EACH FLANGE CONNECTIONS FOR EACH SUPPLY AIR AND EXHAUST AIR DUCT.

TRAILER FLANGE CONNECTION

NOT TO SCALE

6 / M5.3

PIPE SUPPORT DETAIL

NOT TO SCALE

3 / M5.3

REFERENCE NOTES

GENERAL NOTES

LEGEND

AIR NATIONAL GUARD
CIVIL ENGINEERING

UTAH
AIR
NATIONAL
GUARD
BASE

785 NORTH 2200 WEST
SALT LAKE CITY, UTAH
84116-2999

MECHANICAL DETAILS

REGISTERED PROFESSIONAL ENGINEER
117077
WAYNE CLARK PETERSON
STATE OF UTAH

ELECTRONIC SECURITY SQUADRON FACILITY – UTAH AIR NATIONAL GUARD
PROJ. NO. USEB 939661

FFKR Architects Planners
132 Pierpont Ave. Suite 200
Salt Lake City, Utah 84101
Telephone 801 521-8183

DATE: APRIL 1, 1996
REVISED:
CHECKED BY: P.W.L.
DRAWN BY: G.K.S.

DRAWING NO: M5.3

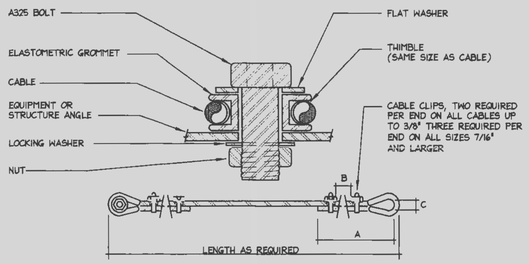

NOTES:

1. CABLE, THIMBLES, CLIPS, GROMMETS & FLAT WASHERS ARE TO BE FURNISHED BY RESTRAINT MANUFACTURER. ALL OTHER HARDWARE TO BE PROVIDED BY CONTRACTOR.
2. CABLE CLIPS MUST BE ORIENTED AS SHOWN WITH SHORT END OF CABLE ON THE CURVED PART OF THE CLIP.

CABLE SCHEDULE

CABLE DIA.	CABLE DESIGN	A	B	C	BOLT SIZE	ALLOWABLE LOAD (lbf)	BREAKING STRENGTH (lbf)
1/8"	7x19 GALV.	5.1/4"	1.5/8"	5/8"	3/8"	660	2000
3/16"	7x19 GALV.	5.3/4"	1.5/8"	5/8"	3/8"	1400	4200
1/4"	7x19 GALV.	6.3/4"	1.5/8"	11/16"	3/8"	2330	7000
5/16"	7x19 GALV.	7.3/8"	1.5/8"	13/16"	5/8"	3260	9800

CABLE RESTRAINT DETAIL (1 / M5.4)

NOT TO SCALE

SCHEDULE FOR TYPICAL CONNECTIONS TO STRUCTURAL SUPPORTING MEMBERS

TYPE	MAX. LOAD CAPACITY POUNDS	PHILLIPS REDHEAD ANCHORS TO CONC. LT. WT.	PHILLIPS REDHEAD ANCHORS TO CONC. HARD ROCK	CONC. CAST-IN PLACE INSERT	BOLT OF STL. BM. CLAMP
I	500	3/8"	3/8"	3/8"	3/8"
II	1000	1/2"	3/8"	1/2"	3/8"
III	1500	5/8"	3/8"	1/2"	3/8"
IV	2000	3/4"	1/2"	5/8"	1/2"
V	3000	2.5/8"	2.1/2"	2.1/2"	5/8"
VI	4000	2.3/4"	2.5/8"	2.5/8"	5/8"

TYPE	SPREADER SIZE	BOLT THRU WOOD	SPAN-CRETE ROD	ANGLE TO SUPPORTING STRUCTURAL MEMBER	ROD SIZE FOR PIPES
I	C4 X 5.4	1/2"	3/8"	3 X 2 X 1/4" X 0'-3" LLH	1/2" Ø
II	C5 X 6.7	3/4"	3/8"	3.1/2 X 2.1/2 X 5/16 X 0'-3" LLH	1/2" Ø
III	C6 X 8.5	***	1/2"	3.1/2 X 2.1/2 X 7/16 X 0'-4" LLH	5/8" Ø
IV	C8 X 11.5	***	1/2"	5 X 3 X 1/2 X 0'-4" LLH	3/4" Ø
V	C9 X 13.4	****		2 - 3.1/2 X 2.1/2 X 7/16 X 0'-4"	7/8" Ø
VI	C10 X 15.3			2 - 5 X 3.1/2 X 0'-4"	7/8" Ø

NOTES:

FOR SLABS LESS THAN 5" THICK ONLY, THIN SLAB INSERTS MAY BE USED.

THE MECHANICAL CONTRACTOR SHALL SUBMIT SHOP DRAWINGS TO THE STRUCTURAL ENGINEER AND THEN TO THE MECHANICAL ENGINEER, SHOWING CONNECTION TYPE AND LOCATION OF ALL RESTRAINT CONNECTIONS TO THE STRUCTURE.

FOR ESSENTIAL FACILITIES WHERE CONCRETE ANCHOR BOLTS OF THE "REDHEAD" EXPANSION TYPE ARE LOADED IN PULL OUT, 50 PERCENT OF THE BOLTS (ALTERNATE BOLTS IN ANY GROUP ARRANGEMENT) SHALL BE PROOF TESTED TO TWICE THE ALLOWABLE LOAD. IF THERE ARE FAILURES, THE IMMEDIATELY ADJACENT BOLTS MUST THEN ALSO BE TESTED.

"HILTI" AND "RAMSET" ANCHORS ARE EQUAL SUBSTITUTES FOR "REDHEAD".

PIPE BRACING GENERAL NOTES

1. DETAILS SHOWN PROVIDE GENERAL GUIDELINES FOR A LATERAL BRACING SYSTEM. A TYPICAL VERTICAL SUPPORT SYSTEM MUST ALSO BE USED.
2. BRACE ALL PIPES 1.1/2" I.D. AND LARGER.
3. CABLE RESTRAINTS AND BRACING NOT TO EXCEED 30'-0" CENTERS AND SHALL BE PROVIDED AT ALL CHANGES IN DIRECTION OF PIPE, ALL DROPS TO EQUIPMENT, AND ON EACH SIDE OF FLEXIBLE CONNECTIONS. BRACE POINTS SHALL NOT EXCEED 15'-0" FROM FLEXIBLE CONNECTION.
4. ALL HOLES IN ANGLES ARE TO BE 1/16 INCH OVERSIZED. PLACE STANDARD CUT WASHERS BETWEEN SHEET METAL ANGLES AND NUT.
5. EQUIPMENT WHICH ATTACHES TO THE PIPING SYSTEM SHALL BE BRACED INDEPENDENTLY OF THE PIPES.
6. ALL SHEET METAL FOR BRACING TO BE FY = 33 KSI MINIMUM. GAUGE FOR SHEET METAL BRACING SHALL BE AS FOLLOWS:

   16 GA. = (0.059B INCH)
   14 GA. = (0.0747 INCH)
   12 GA. = (0.1046 INCH)

7. MINIMUM DISTANCE FROM EDGE OF ANGLE TO BOLTS SHALL BE AS FOLLOWS:

   1/4" TO 1/2" DIA. = 1"
   5/8" DIA. = 1.1/8"
   3/4" DIA. = 1.1/4"
   7/8" DIA. = 1.1/2"

8. DO NOT FASTEN RESTRAINT SYSTEM TO TWO DISSIMILAR PARTS OF A BUILDING THAT MAY RESPOND IN A DIFFERENT MODE DURING AN EARTHQUAKE. FOR EXAMPLE, A WALL AND A ROOF.
9. PROVIDE LARGE ENOUGH PIPE SLEEVES THROUGH WALLS OR FLOORS TO ALLOW FOR ANTICIPATED DIFFERENTIAL MOVEMENTS.
10. BRACING DETAILS, SCHEDULE AND NOTES ARE TO BE USED WITH THE FOLLOWING TYPES OF PIPE: STEEL PIPE SCHEDULE 40 AND 80, COPPER PIPE TYPE K,L,M (ONLY SILVER SOLDERED BRAZED JOINTS TO BE USED WITH COPPER PIPE)
11. FOR GAS PIPING, THE BRACING DETAILS, SCHEDULES AND NOTES MAY BE USED EXCEPT THAT RESTRAINTS SHALL BE INSTALLED AT EVERY 20'-0" O.C. ALSO ALL PIPE 1 INCH AND LARGER SHALL BE BRACED.
12. WASTE, VENT AND ROOF DRAINAGE PIPING SYSTEMS ARE EXCLUDED FROM THE RESTRAINT GUIDELINES.
13. ALTERNATE EVERY OTHER CABLE RESTRAINT IN OPPOSITE DIRECTION.

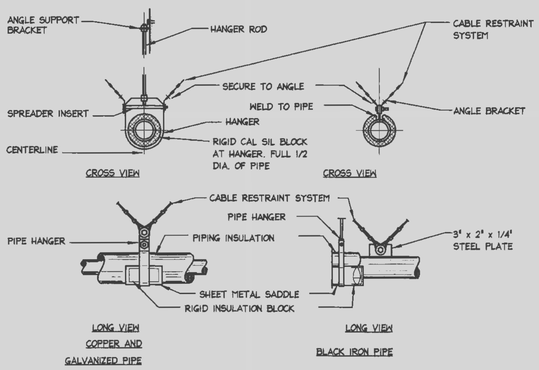

PIPING RESTRAINT DETAIL (2 / M5.4)

NOT TO SCALE

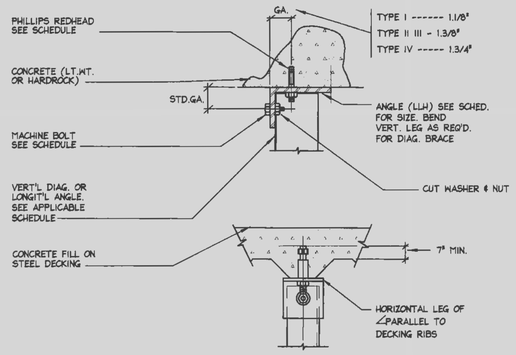

CONNECTIONS TO CONCRETE DETAIL (3 / M5.4)

NOT TO SCALE

PIPE CABLE BRACING SCHEDULE

PIPE SIZE	HANGER ROD SIZE	MAX. ROD LENGTH	HANGER TYPE	BOLTS TO CABLE	# CABLE SIZE	## CABLE TYPE	ANCHOR CONN. TYPE
1.1/2"	1/2"ø	25"	CLEVIS	3/8"ø	1/8"ø	7x19 GALV	I
2"	1/2"ø	25"	CLEVIS	3/8"ø	1/8"ø	7x19 GALV	I
2.1/2"	5/8"ø	31"	CLEVIS	3/8"ø	1/8"ø	7x19 GALV	I
3"	5/8"ø	31"	CLEVIS	3/8"ø	3/16"ø	7x19 GALV	II
3.1/2"	5/8"ø	31"	CLEVIS	3/8"ø	3/16"ø	7x19 GALV	II
4"	3/4"ø	37"	CLEVIS	3/8"ø	3/16"ø	7x19 GALV	II

FOR ANCHOR CONNECTIONS SEE SCHEDULE.

SEE PIPE BRACING DETAILS.

TWO CABLES REQUIRED AT EACH RESTRAINT POINT, EACH CABLE TO BE INSTALLED 45° TO HORIZONTAL AND 45° TO LONGITUDINAL DIRECTION OF PIPE.

CABLE SYSTEMS TO BE EQUAL TO AMBER BOOTH C/H CLAMPS, THIMBLES AND GROMETS.

REFERENCE NOTES

GENERAL NOTES

LEGEND

AIR NATIONAL GUARD CIVIL ENGINEERING

UTAH AIR NATIONAL GUARD BASE

705 NORTH 2200 WEST
SALT LAKE CITY, UTAH
84116-2999

SEISMIC DETAILS

REGISTERED PROFESSIONAL ENGINEER # 117077 WAYNE P. LEMON STATE OF UTAH

ELECTRONIC SECURITY SQUADRON FACILITY – UTAH AIR NATIONAL GUARD
PROJ. NO. USEB 939661

FFKR

DATE: APRIL 1, 1996
REVISED:
CHECKED BY: P.W.L.
DRAWN BY: G.K.S.

DRAWING NO: M5.4

DUCT BRACING GENERAL NOTES

1. DETAILS SHOWN PROVIDE GENERAL GUIDELINES FOR A LATERAL BRACING SYSTEM. A TYPICAL VERTICAL SUPPORT SYSTEM MUST ALSO BE USED.
2. BRACE ALL RECTANGULAR DUCTS 6 SQ. FT. AREA AND LARGER. BRACE ALL ROUND DUCTS 28" IN DIAMETER AND LARGER.
3. CABLE RESTRAINTS AND BRACING NOT TO EXCEED 30'-0" CENTERS AND SHALL BE PROVIDED AT EACH TURN, AT THE END OF EACH DUCT RUN, AND ON EACH SIDE OF FLEXIBLE CONNECTIONS. BRACE POINTS SHALL NOT EXCEED 15'-0" FROM FLEXIBLE CONNECTION.
4. WHEN COMBINING DUCT GROUPS ON COMMON BRACING SYSTEMS, USE WEIGHTS AND DIMENSIONS FROM BRACING SCHEDULE.
5. ALL HOLES IN ANGLES ARE TO BE 1/16 INCH OVERSIZED. PLACE STANDARD CUT WASHERS BETWEEN SHEET METAL ANGLES AND NUT.
6. DUCTS NOT BRACED SHALL BE INSTALLED WITH A 6" MIN. CLEARANCE TO VERTICAL CEILING HANGER WIRES.
7. VAV BOXES AND OTHER ITEMS WHICH ATTACH TO THE DUCT SYSTEM SHALL BE BRACED INDEPENDENTLY OF THE DUCTS.
8. ALL SHEET METAL FOR BRACING TO BE FY = 33 KSI MINIMUM. GAUGE FOR SHEET METAL BRACING SHALL BE AS FOLLOWS:

   16 GA = (0.0598 INCH)
   14 GA = (0.0747 INCH)
   12 GA = (0.1046 INCH)

9. MINIMUM DISTANCE FROM EDGE OF ANGLE TO BOLTS SHALL BE AS FOLLOWS:

   1/4" TO 1/2" DIA. = 1"
   5/8" DIA. = 1-1/8"
   3/4" DIA. = 1-1/4"
   7/8" DIA. = 1-1/2"

10. DO NOT FASTEN RESTRAINT SYSTEM TO TWO DISSIMILAR PARTS OF A BUILDING THAT MAY RESPOND IN A DIFFERENT MODE DURING AN EARTHQUAKE. FOR EXAMPLE, A WALL AND A ROOF.
11. ALTERNATE EVERY OTHER CABLE RESTRAINT IN OPPOSITE DIRECTION (SHOWN DOTTED).

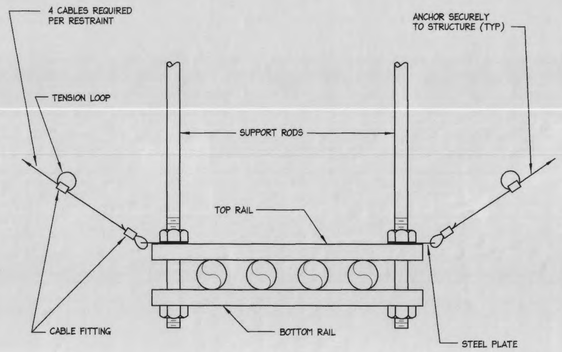

TYPICAL TRAPEZE HANGER SEISMIC RESTRAINT (1 / M5.5)

NOT TO SCALE

DUCT CABLE BRACING SCHEDULE

DUCT SIZE (MAX.)	#WT/ LIN FT. (MAX.)	BOLT SIZE	HORIZONTAL ANGLE	VERTICAL ANGLE	CABLE DIA. ##	CABLE DESIGN	ANCHOR CONN. TYPE
12"	5#	3/8" Ø	2x2x16 GA.	2x2x12 GA.	1/8" Ø	7x19 GALV	I
18"	8#	3/8" Ø	2x2x16 GA.	2.1/2x2.1/2x12 GA.	1/8" Ø	7x19 GALV	I
24"	10#	3/8" Ø	2x2x16 GA.	2.1/2x2.1/2x12 GA.	1/8" Ø	7x19 GALV	I
30"	13#	3/8" Ø	2x2x16 GA.	2.1/2x2.1/2x12 GA.	1/8" Ø	7x19 GALV	I
42"	20#	3/8" Ø	2.1/2x2.1/2x16 GA.	4x4x12 GA.	3/16" Ø	7x19 GALV	II

MAXIMUM WEIGHT OF DUCTS OR COMBINATIONS OF DUCTS PER LINEAR FOOT. THE DUCTS MAXIMUM DIMENSION SHALL GOVERN WHAT BRACING IS REQUIRED. FOR ANCHOR CONNECTIONS SEE SCHEDULE. SEE DUCT BRACING DETAILS.

TWO CABLES REQUIRED AT EACH RESTRAINT POINT, EACH CABLE TO BE INSTALLED 45 DEG. TO HORIZONTAL AND 45 DEG. TO LONGITUDINAL DIRECTION OF DUCT.

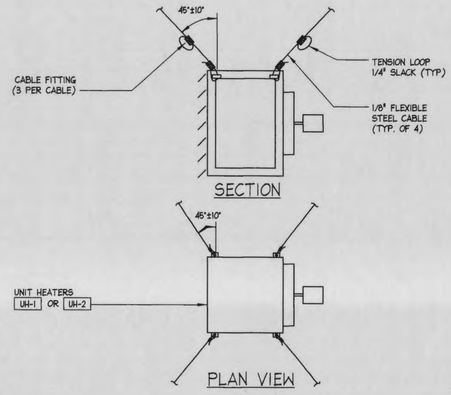

UNIT HEATER SEISMIC MOUNTING DETAIL (2 / M5.5)

NOT TO SCALE

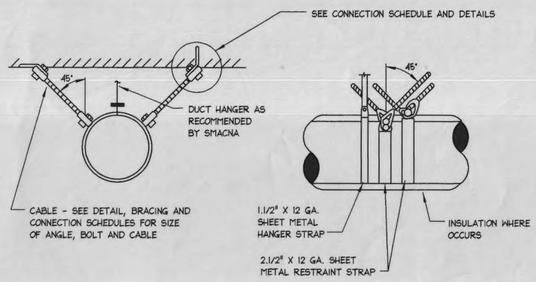

CABLE BRACING FOR ROUND DUCTS (4 / M5.5)

NOT TO SCALE

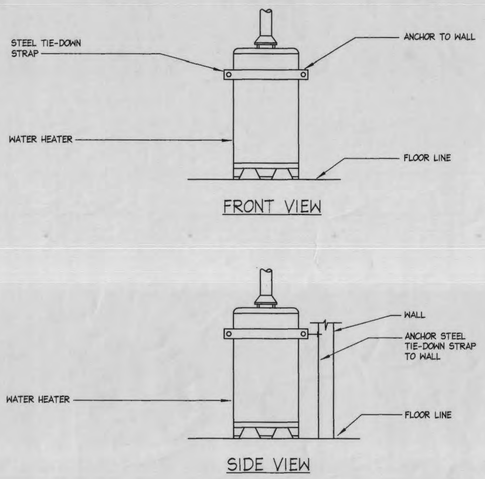

WATER HEATER SEISMIC RESTRAINT DETAIL (3 / M5.5)

NOT TO SCALE

REFERENCE NOTES

GENERAL NOTES

LEGEND

AIR NATIONAL GUARD CIVIL ENGINEERING

UTAH AIR NATIONAL GUARD BASE

785 NORTH 2200 WEST
SALT LAKE CITY, UTAH
84116-2999

SEISMIC DETAILS

REGISTERED PROFESSIONAL ENGINEER # 117077 WAYNE CLARK PETERSON STATE OF UTAH

ELECTRONIC SECURITY SQUADRON FACILITY – UTAH AIR NATIONAL GUARD
PROJ. NO. USEB 939661

FFKR Architects Planners

132 Pierpont Ave. Suite 200
Salt Lake City, Utah 84101
Telephone 801 521-3185

DATE: APRIL 1, 1996
REVISED:
CHECKED BY: P.W.L.
DRAWN BY: G.K.S.

DRAWING NO: M5.5

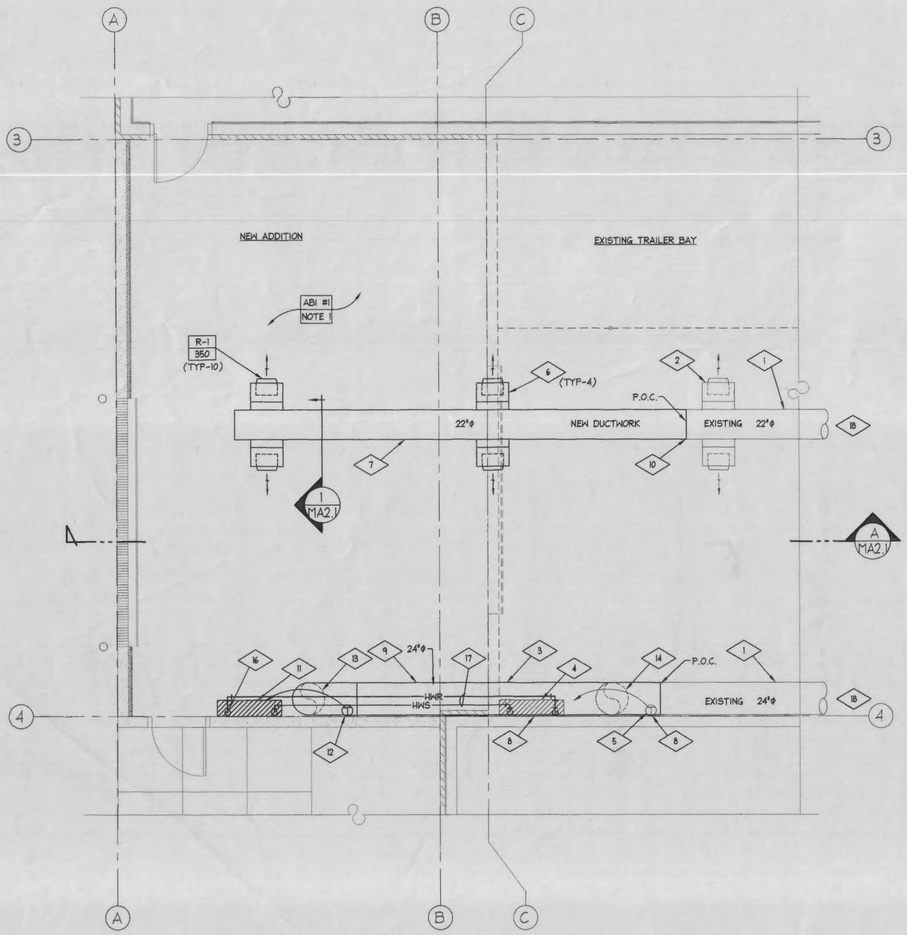

MECHANICAL PLAN

SCALE: 1/4"=1'-0"

N

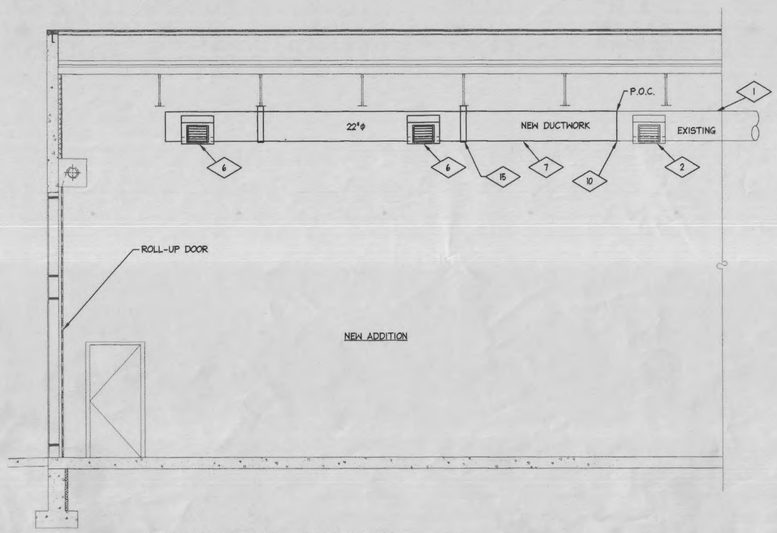

MECHANICAL SECTION

SCALE: 1/4"=1'-0"

A MA2.1

REGISTER & GRILLE SCHEDULE					
SYMBOL	NECK SIZE	SERVICE	LOCATION	MAKE & MODEL	REMARKS
R-1 / CFM	18"x6"	SUPPLY	SIDE OF DUCT	KRUEGER - DPL (1)	DRUM LOUVER

NOTES:
(1) THE LISTED MANUFACTURER IS INTENDED TO BE DESCRIPTIVE, BUT NOT RESTRICTIVE. THE LISTED MANUFACTURER IS INDICATING MINIMUM QUALITY AND CHARACTERISTICS SUBJECT TO COMPLIANCE WITH CONTRACT REQUIREMENTS. THE CONTRACTOR MAY PROPOSE ANY AVAILABLE PRODUCT THAT COMPLIES WITH THE CONTRACT REQUIREMENTS.

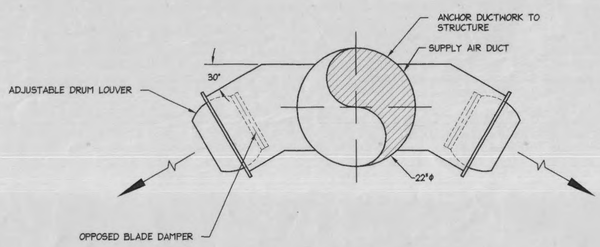

DRUM LOUVER DETAIL

NOT TO SCALE

1 MA2.1

REFERENCE NOTES

1. EXISTING SUPPLY-AIR DUCT TO REMAIN.
2. EXISTING DRUM LOUVER TO REMAIN. (TYPICAL)
3. NEW SUPPLY AIR DUCT TO BE PRIMED AND PAINTED TO MATCH EXISTING.
4. RELOCATE EXISTING FAN COIL UNIT, SEE NOTE 11.
5. RELOCATE THERMOSTAT TO NEW LOCATION, SEE NOTE 12.
6. NEW DRUM LOUVER TO MATCH EXISTING.
7. NEW SUPPLY-AIR DUCT TO BE PRIMED AND PAINTED TO MATCH EXISTING DUCTWORK.
8. PATCH AND REPAIR AS REQUIRED TO MATCH EXISTING WALL.
9. NEW 24" DIA. DUCTWORK, NEW DUCT TO MATCH EXISTING FOR TYPE AND GAUGE CONSTRUCTION.
10. NEW 22" DIA. DUCTWORK TO CONNECT TO EXISTING. NEW DUCT TO MATCH EXISTING FOR TYPE AND GAUGE CONSTRUCTION.
11. NEW LOCATION OF FAN COIL UNIT.
12. NEW LOCATION OF THERMOSTAT.
13. NEW LOCATION OF SUPPLY-AIR ELBOW AND FLEXDUCT.
14. REMOVE EXISTING 24" DIA. ELBOW AND FLEXIBLE DUCT. RELOCATE TO NEW POSITION. SEE NOTE 13.
15. SUPPORT DUCTWORK IN SIMILAR FASHON TO THAT OF THE EXISTING DUCTWORK.
16. DROP 1" HWS & HWR LINES EXPOSED ON WEST HALL. INSULATE AND PROVIDE ALUMINUM JACKET.
17. RE-PIPE EXISTING HWS & HWR LINES TO NEW FAN COIL UNIT LOCATION RUN PIPING HIGH ABOVE DUCTWORK
18. RE-BALANCE ENTIRE SUPPLY AIR SYSTEM. PROVIDE NEW SHEAVES ON EXISTING AIR HANDLER. REBALANCE EACH DIFFUSER TO QUANTITY INDICATED.

GENERAL NOTES

1. ALL REMODEL WORK FOR THIS BUILDING SHALL BE CONSIDERED AS ALTERNATE BID ITEM (ABI) NO. 1. NO MECHANICAL OR PLUMBING WORK SHALL BE PERFORMED UNLESS ABI/#1 IS SELECTED.

LEGEND

AIR NATIONAL GUARD CIVIL ENGINEERING

UTAH AIR NATIONAL GUARD BASE

785 NORTH 2200 WEST
SALT LAKE CITY, UTAH
84116-2999

REGISTERED PROFESSIONAL ENGINEER
117077
WAYNE CLARK PETERSON
STATE OF UTAH

ELECTRONIC SECURITY SQUADRON FACILITY – UTAH AIR NATIONAL GUARD
PROJ. NO. USEB 939661

FFKR Architects Planners
132 Pierpont Ave. Suite 200
Salt Lake City, Utah 84101
Telephone 801 521-8138

MECHANICAL PLAN

DATE: APRIL 1, 1996
REVISED:
CHECKED BY: P.W.L.
DRAWN BY: M.K./G.K.S.

DRAWING NO: MA2.1

PLUMBING FIXTURE SCHEDULE

SYMBOL	FIXTURE	WASTE	VENT	C.W.	H.W.	NOTES
WC 1	WATER CLOSET	4"	2"	1 1/2"	--	WALL HUNG
WC 2	WATER CLOSET	4"	2"	1-1/2"	--	♿ WALL HUNG
U 1	URINAL	2"	1-1/2"	1-1/4"	--	WALL HUNG
U 2	URINAL	2"	1-1/2"	1-1/4"	--	♿ WALL HUNG
L 1	LAVATORY	1-1/2"	1-1/2"	1/2"	1/2"	COUNTER-TOP MOUNTED
L 2	LAVATORY	1-1/2"	1-1/2"	1/2"	1/2"	♿ COUNTER-TOP MOUNTED
DF 1	DRINKING FOUNTAIN	1-1/4"	1-1/4"	1/2"	--	♿ WALL MOUNTED
S 1	SINK	2"	1-1/2"	1/2'	1/2"	COUNTER-TOP MOUNTED
S 2	SINK	2"	1-1/2"	1/2'	1/2"	COUNTER-TOP MOUNTED
SS 1	SERVICE SINK	3"	2"	3/4"	3/4"	--
SS 2	SERVICE SINK	2"	2"	3/4"	3/4"	WALL MOUNTED
SH 1	SHOWER TRIM	2"	2"	1/2"	1/2"	♿ --
FD 1	FLOOR DRAIN	2"	2"	--	--	--
RD 1	ROOF DRAIN	SEE PLANS FOR SIZE				--
RD 2	SECONDARY ROOF DRAIN	SEE PLANS FOR SIZE				--
DS 1	DOWN SPOUT	SEE PLANS FOR SIZE				--
FS 1	FLOOR SINK	2"	2"	--	--	--
HS 1	HOSE STATION	--	--	3/4"	3/4"	WALL MOUNTED, 5'-0" A.F.F.
AO 1	COMPRESSED AIR OUTLET	--	--	--	--	SEE PLAN FOR SIZE
WH 1	WALL HYDRANT	--	--	3/4"	--	FREEZE PROOF
HB 1	HOSE BIBB	--	--	1/2"	--	--
TD 1	TRENCH DRAIN	SEE PLANS FOR SIZE				MOUNT IN BOTTOM OF POLYMER CONCRETE, PRE-FABRICATED TRENCH DRAIN

♿ HANDICAP ACCESSIBLE FIXTURE. PLUMBING FIXTURE SHALL COMPLY WITH THE AMERICANS WITH DISSABILITIES ACT (ADA). FIXTURE TO FULLY MEET ALL LOCAL HANDICAP CODES.

PUMP SCHEDULE

SYMBOL	TYPE	SYSTEM	LOC.	G.P.M.	FT. OF HEAD	MOTOR	MAKE & MODEL
CP-1	ALL BRONZE IN-LINE	HOT WATER RECIRC.	WATER HEATER	10	10	1/2 H.P. 120V, 1ø	BAG LR 15B (1)

NOTES:
(1) THE LISTED MANUFACTURER IS INTENDED TO BE DESCRIPTIVE, BUT NOT RESTRICTIVE. THE LISTED MANUFACTURER IS INDICATING MINIMUM QUALITY AND CHARACTERISTICS SUBJECT TO COMPLIANCE WITH CONTRACT REQUIREMENTS. THE CONTRACTOR MAY PROPOSE ANY AVAILABLE PRODUCT THAT COMPLIES WITH THE CONTRACT REQUIREMENTS.

PLUMBING EQUIPMENT SCHEDULE

C-1 AIR COMPRESSOR: TWO STAGE, AIR COOLED, ASME RATED CAST IRON AIR COMPRESSOR. RATING: 11 ACFM @ 100 PSIG. COMPRESSOR TO BE TANK MOUNTED ON AN 80 GAL. CAPACITY VERTICAL RECEIVER WITH MANUAL DRAIN TRAP. UNIT TO BE COMPLETE WITH AUTO. STOP FOR LOW OIL LEVEL PROTECTION, AUTO START-STOP OPERATION WITH NEMA 1 PRESSURE SWITCH. PROVIDE INTEGRAL OR SEPERATE WALL MOUNTED AIR COOLED AFTER-COOLER TO LOWER DISCHARGE AIR TO WITHIN 25°F. OF AMBIENT. PROVIDE SAFETY RELIEF VALVE.
MFGR: INGERSOLL RAND
MODEL: 2340B T30
ELEC: 3 H.P. 208V, 3ø
SIZE: 36"x20"x72"TALL
WEIGHT: 550 LBS

NOTE:
UNIT TO BE MOUNTED ON A 4" HIGH CONCRETE PAD. PAD TO BE PROVIDED BY GEN. CONTRACTOR. COORDINATE ANCHOR BOLT LOCATIONS. MECHANICAL CONTRACTOR TO SEISMICALLY BRACE RECIEVER TANK.

WS-1 WATER SOFTENER: 25 GPM NORMAL FLOW RATE, 45 GPM PEAK @ 15 PSI PRESSURE DROP THROUGH THE SOFTENER. 1 1/2" PIPE CONNECTIONS, 60,000 GRAIN MAXIMUM EXCHANGE CAPACITY, 2.0 CUBIC FEET OF HIGH CAPACITY RESIN IN SOFTENER TANK.
SOFTENER TANK SHALL BE 10" DIAMETER X 60" HIGH AND LOCATED ADJACENT TO A SINGLE 18" DIAMETER X 48" HIGH BRINE TANK. THE ENTIRE WATER SOFTENER ASSEMBLY SHALL BE COMPLETE WITH MULTI-CYCLE, SOLID BRASS, CONTROL VALVE AND FITTINGS FOR FULLY AUTOMATIC OPERATION, INCLUDING AUTOMATIC BRINE CONTROL, TIMER, BACKWASH AND RECHARGING VALVE.
MFGR: COLUMBIA
MODEL: B-362
ELEC.: 120V, 1ø
SIZE: 30" X 18" X 60" TALL
WEIGHT: 700 LBS.

NOTE:
UNIT TO BE MOUNTED ON A 4" HIGH CONCRETE PAD. PAD TO BE PROVIDED BY GEN. CONTRACTOR. MECHANICAL CONTRACTOR TO SEISMICALLY BRACE TANKS.

WH-1 WATER HEATER: GAS FIRED, 199,000 BTU/HR INPUT 322 GPH RECOVERY CAPACITY @ 60° TEMPERATURE RISE. 100 GAL. CAPACITY GLASS LINED STORAGE TANK, FULLY AUTOMATIC CONTROLS WITH MANUAL GAS RESET. UNIT TO BE AGA CERTIFIED. UNIT TO BE COMPLETE WITH PRESSURE AND TEMPERATURE RELIEF VALVE, ANODIC PROTECTION, & ADJUSTABLE THERMOSTAT (110-180°F RANGE). 80% MIN. EFFICIENCY PER ASHRAE 90.1 LB, DRAFT DIVERTER WITH MOTORIZED DAMPER.
MFGR: A.O. SMITH INC.
MODEL: BTC-200
ELEC.: 120 V, 1ø
SIZE: 30" DIAMETER X 72" TALL, 6" DIAMETER TYPE 'B' FLUE

NOTE:
UNIT TO BE MOUNTED ON A 4" HIGH CONCRETE PAD. PAD TO BE PROVIDED BY GEN. CONTRACTOR. MECHANICAL CONTRACTOR TO SEISMICALLY BRACE TANK.

NOTE:
THE LISTED MANUFACTURERS IS INTENDED TO BE DESCRIPTIVE, BUT NOT RESTRICTIVE. THE LISTED MANUFACTURERS IS INDICATING MINIMUM QUALITY AND CHARACTERISTICS SUBJECT TO COMPLIANCE WITH CONTRACT REQUIREMENTS. THE CONTRACTOR MAY PROPOSE ANY AVAILABLE PRODUCT THAT COMPLIES WITH THE CONTRACT REQUIREMENTS.

PLUMBING ABBREVIATIONS

AMB.	AMBIENT
A.F.F.	ABOVE FINISHED FLOOR
A.F.G.	ABOVE FINISHED GRADE
CFM	CUBIC FEET PER HOUR
CONC.	CONCRETE
CO	CLEAN OUT
CONN.	CONNECTION
COTG	CLEAN OUT TO GRADE
C.W.	DOMESTIC COLD WATER
DEG.	DEGREES
DIA.	DIAMETER
EWT	ENTERING WATER TEMPERATURE
EXIST.	EXISTING
°F	DEGREES FAHRENHEIT
FCO	FLOOR CLEAN OUT
FT.	FEET
GA.	GAUGE
GAL.	GALLONS
G.C.	GENERAL CONTRACTOR
GPM	GALLONS PER MINUTE
H.W.	DOMESTIC HOT WATER
H.P.	HORSEPOWER
I.D.	INSIDE DIAMETER
IN.	INCHES
KW	KILOWATTS
LIN.	FT. LINEAR
LWT	LEAVING WATER TEMPERATURE
MAX.	MAXIMUM
MFGR.	MANUFACTURER
MIN.	MINIMUM
NO.	NUMBER
O.C.	ON CENTER
P.D.	PRESSURE DROP
P.E.	POLYETHYLENE
PH	PHASE
P.O.C.	POINT OF CONNECTION
PS	PIPE SLEEVE
PSI	POUNDS PER SQUARE INCH
PSIG	POUNDS PER SQUARE INCH GAGE
REQ'D	REQUIRED
RPM	REVOLUTIONS PER MINUTE
SQ. FT.	SQUARE FOOT (SQUARE FEET)
SQ. IN.	SQUARE INCH (SQUARE INCHES)
TEMP.	TEMPERATURE
TYP.	TYPICAL
V	VOLTS
VERT.	VERTICAL
W	WIDTH
WCO	WALL CLEAN OUT
WG	WATER GAGE
WT.	WEIGHT

PLUMBING PIPING LEGEND AND SYMBOLS

- COLD WATER
- HOT WATER
- RECIRCULATING HOT WATER
- SANITARY SEWER
- V — VENT
- GATE VALVE
- GLOBE VALVE
- BALL VALVE
- CHECK VALVE
- STRAINER W/BLOWDOWN
- PRV VALVE
- GAS COCK
- UNION
- THERMOMETER
- PRESSURE GAUGE W/GAUGE COCK
- PIPE DROP
- PIPE RISE
- CAPPED PIPE
- BP — REDUCED PRESSURE BACKFLOW PREVENTER
- PRESSURE REDUCING VALVE
- BUTTERFLY VALVE
- CLEANOUT
- ROOF DRAIN
- G — GAS LINE
- A — COMPRESSED AIR LINE
- NP — NON-POTABLE WATER LINE
- RD — PRIMARY ROOF DRAIN LINE
- SRD — SECONDARY ROOF DRAIN LINE
- D — DRAIN LINE
- SW — SOFT WATER LINE

REFERENCE NOTES

GENERAL NOTES

LEGEND

AIR NATIONAL GUARD
CIVIL ENGINEERING

UTAH
AIR
NATIONAL
GUARD
BASE

785 NORTH 2200 WEST
SALT LAKE CITY, UTAH
84116-2999

PLUMBING
SCHEDULES & DETAILS

DATE: APRIL 1, 1996
REVISED:
CHECKED BY: P.W.L.
DRAWN BY: M.K./D.K.S.
DRAWING NO: P1.1

REGISTERED PROFESSIONAL ENGINEER
117077
WAYNE CLARK SWENSON
STATE OF UTAH

ELECTRONIC SECURITY SQUADRON FACILITY – UTAH AIR NATIONAL GUARD
PROJ. NO. USEB 939661

FFKR Architects Planners
132 Pierpont Ave. Suite 200
Salt Lake City, Utah 84101
Telephone 801 521-8185

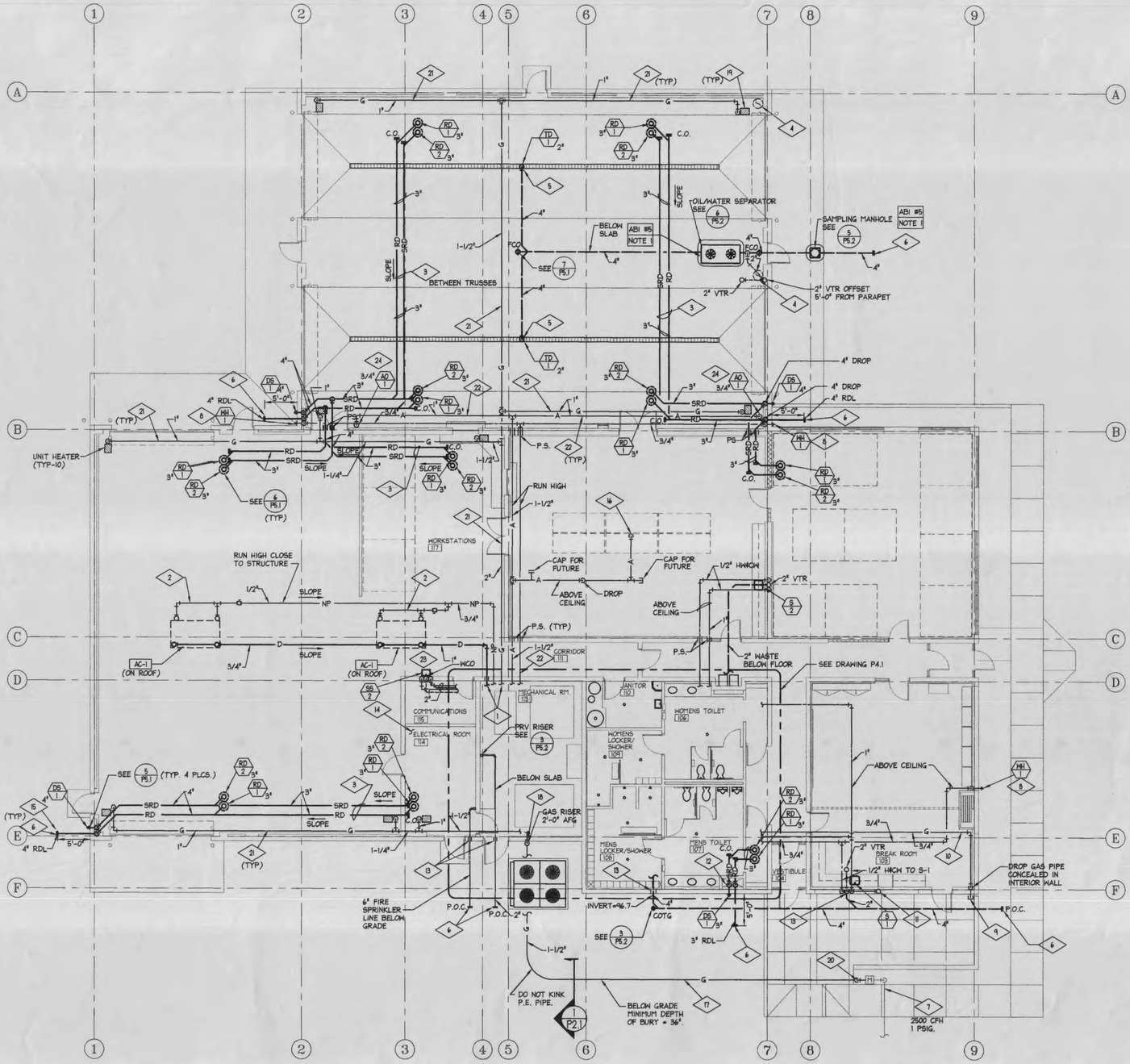

PLUMBING FLOOR PLAN

SCALE: 1/8"=1'-0"

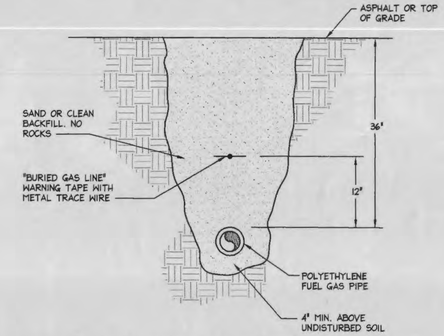

GAS PIPING INSTALLATION DETAIL — 1/P2.1

NOT TO SCALE

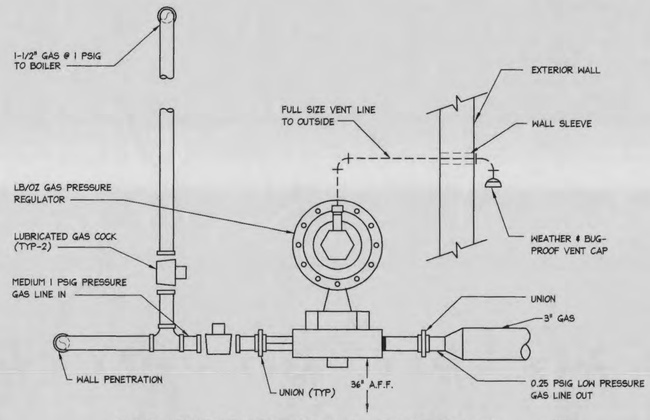

GAS PRESSURE REGULATOR DETAIL — 2/P2.1

NOT TO SCALE

REFERENCE NOTES

1. FOR CONTINUATION OF PIPING SEE DRAWING P4.1.
2. FOR WATER AND DRAIN PIPING INSTALLATION SEE DETAIL 1/P4.1 AND 7/M5.2.
3. RUN EXPOSED ROOF DRAIN PIPING HIGH CLOSE TO ROOF STRUCTURE. SLOPE 1/4" PER LIN. FT.
4. MECHANICAL DUCTWORK. SHOWN FOR COORDINATION ONLY.
5. CONCRETE TRENCH AND GRATING BY GENERAL CONTRACTOR. TRENCH DRAIN AND INSTALLATION BY PLUMBER SEE DETAIL 7/P5.2.
6. POINT OF CONNECTION. SITE UTILITY CONTRACTOR TO CONNECT TO PIPING AT THIS LOCATION. MATCH PIPING SIZE AND MATERIAL OR PROVIDE COMPATIBLE TRANSITION.
7. GAS UTILITY SERVICE REGULATOR AND METER SET BY MOUNTAIN FUEL SUPPLY CO. PLUMBING CONTRACTOR TO ARRANGE FOR AND PAY FOR ALL FEES AND CONNECTIONS.
8. INSTALL NON-FREEZE WALL HYDRANT 24" ABOVE FINISHED GRADE.
9. STUB OUT 1/2" GAS CONNECTION FOR FUTURE GRILL. PROVIDE GAS COCK. GROUT WALL PENETRATION SOLID.
10. GAS LINE IN RETURN AIR PLENUM TO BE SOCKET WELDED. NO THREADED FITTINGS OR VALVES PERMITTED ABOVE THE CEILING.
11. PIPE 1/4" COPPER TUBING FROM SINK C.W. SUPPLY TO REFRIGERATOR ICE MAKER PROVIDE ACCESSIBLE SHUT-OFF VALVE BELOW SINK.
12. RD AND SRD LINES TO DROP IN CHASE. COORDINATE LOCATION WITH RECESSED FAN COIL UNIT.
13. FOUNDATION WALL PENETRATION. PROVIDE SCHEDULE 40 PVC WALL SLEEVE WITH MECHANICAL LINK SEAL.
14. ELECTRICAL ROOM. DO NOT RUN ANY PIPING OVER ELECTRICAL PANELS, MOTOR CONTROL CENTERS OR TRANSFORMERS. MAINTAIN 3'-0" CLEARANCE OF ALL PIPING FROM ALL ELECTRICAL ITEMS.
15. MINIMUM DEPTH OF BURY IS 24"
16. STUB OUT 1" COMPRESSED AIR DROP BELOW CEILING TERMINATE WITH BALL VALVE AND CAP.
17. UNDERGROUND POLYETHYLENE GAS LINE. BY PLUMBING CONTRACTOR.
18. INSTALL LUBRICATED GAS COCK IN VERTICAL RISER OUTSIDE OF BLDG.
19. FOR GAS PIPING TO UNIT HEATER, SEE DETAIL 3/M5.1.
20. PLUMBING CONTRACTOR TO PROVIDE METALIC, WRAPPED TRANSISTION RISER TO P.E. PIPE.
21. PAINT EXPOSED GAS PIPING WITH TWO COATS ENAMEL PAINT. COLOR: YELLOW.
22. PAINT EXPOSED AIR PIPING WITH TWO COATS ENAMEL PAINT. COLOR: BLUE.
23. PROVIDE 1/2" HW, 1/2" CW, AND 2" WASTE TO WALL MOUNTED SINK.
24. AIR DROP. SEE DETAIL 1/P5.2 FOR INSTALLATION. (TYP-3 PLCS.)

GENERAL NOTES

1. FURNISHING AND INSTALLATION OF THE OIL/WATER SEPARATOR AND THE SAMPLING MANHOLE SHALL BE CONSIDERED AS ALTERNATE BID ITEM (ABI) NO. 5. DO NOT FURNISH OR INSTALL THE OIL/WATER SEPARATOR OR THE SAMPLING MANHOLE UNLESS ABI/#5 IS SELECTED. PROVIDE CONTINUOUS WASTE LINE IF ABI/#5 IS NOT SELECTED.

LEGEND

AIR NATIONAL GUARD — CIVIL ENGINEERING

UTAH AIR NATIONAL GUARD BASE

785 NORTH 2200 WEST
SALT LAKE CITY, UTAH
84116-2999

PLUMBING FLOOR PLAN

REGISTERED PROFESSIONAL ENGINEER — 117077 — WAYNE CLARK PETERSON — STATE OF UTAH

ELECTRONIC SECURITY SQUADRON FACILITY – UTAH AIR NATIONAL GUARD
PROJ. NO. USEB 939661

FFKR Architects Planners
132 Pierpont Ave. Suite 200
Salt Lake City, Utah 84101
Telephone 801 521-8136

DATE: APRIL 1, 1998
REVISED:
CHECKED BY: P.W.L.
DRAWN BY: G.K.S.

DRAWING NO: P2.1

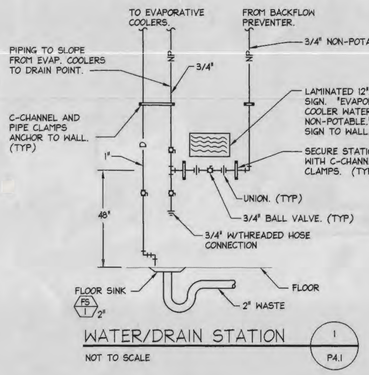

WATER/DRAIN STATION

NOT TO SCALE — 1 / P4.1

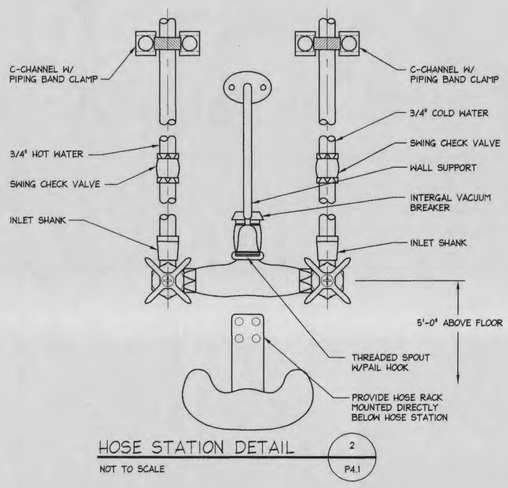

HOSE STATION DETAIL

NOT TO SCALE — 2 / P4.1

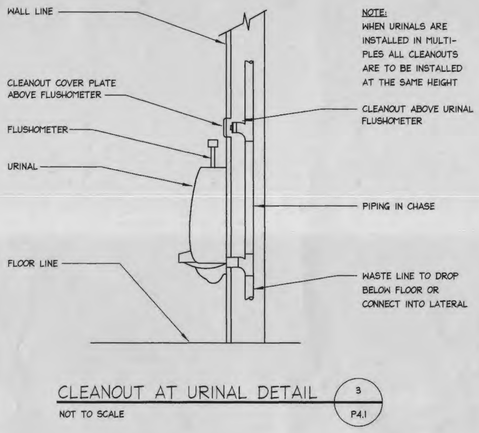

NOTE: WHEN URINALS ARE INSTALLED IN MULTIPLES ALL CLEANOUTS ARE TO BE INSTALLED AT THE SAME HEIGHT

CLEANOUT AT URINAL DETAIL

NOT TO SCALE — 3 / P4.1

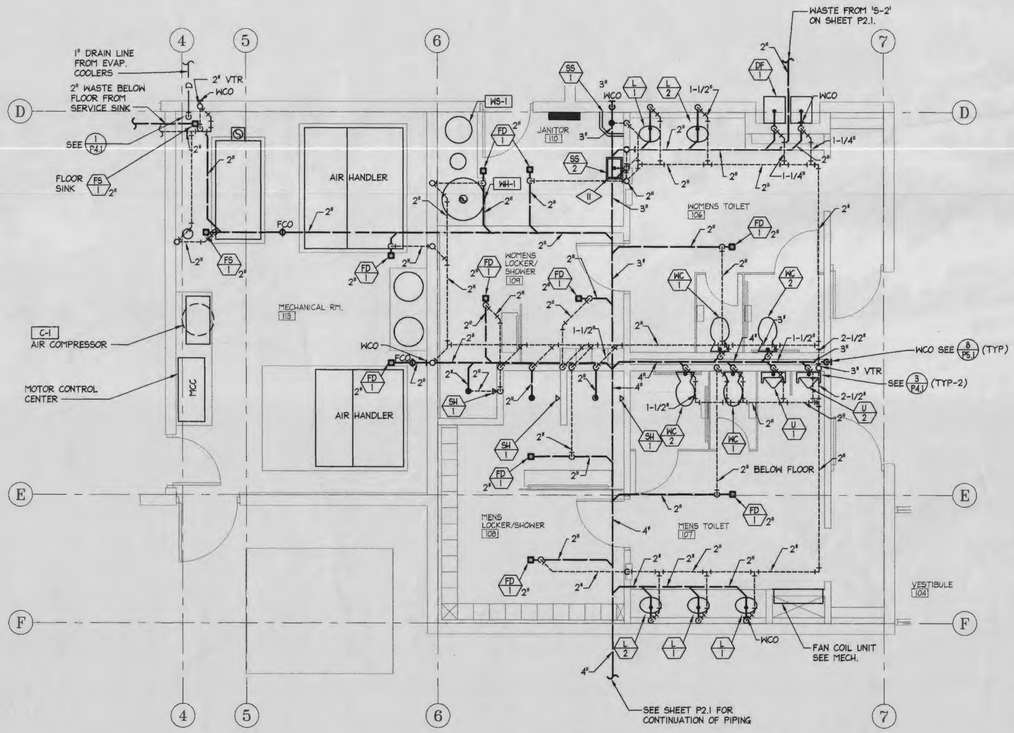

ENLARGED TOILET/LOCKER ROOMS WASTE & VENT PLAN

1/4" = 1'-0"

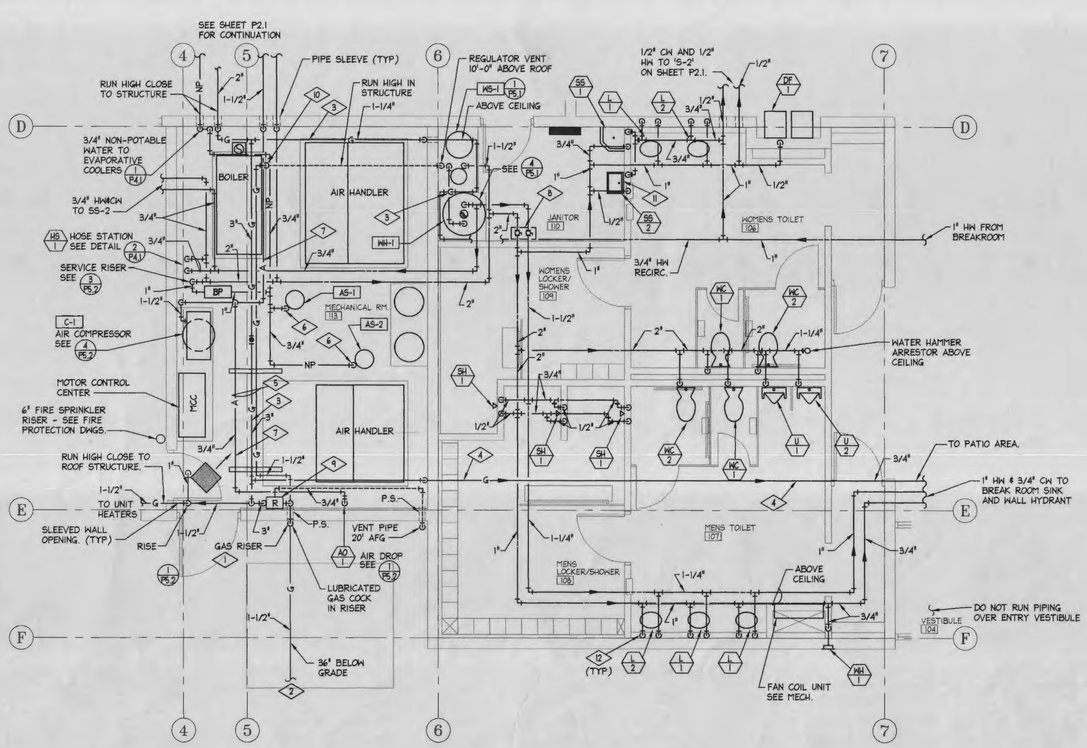

ENLARGED TOILET/LOCKER ROOMS WATER/GAS SUPPLY PLAN

1/4" = 1'-0"

REFERENCE NOTES

1. PROVIDE APPROPRIATE TRANSITION RISER FROM UNDERGROUND P.E. PIPING TO ABOVE GRADE. PROVIDE DIELECTRIC UNION, AND WRAPPED OR COATED RISER.
2. FOR CONTINUATION OF PIPING SEE DRAWING P2.1.
3. PAINT EXPOSED GAS PIPING WITH TWO COATS ENAMEL PAINT. COLOR: YELLOW.
4. GAS LINE IN RETURN AIR PLENUM TO BE SOCKET WELDED. NO THREADED FITTINGS OR VALVES PERMITTED ABOVE CEILING.
5. RUN GAS PIPING AT 12'-0" A.F.F. RACKED WITH CHS, AND CWR PIPING. SEE DRAWING M4.1.
6. MAKE-UP WATER TO AIR SEPERATOR. SEE DETAIL 2/P5.1.
7. PAINT EXPOSED AIR PIPING WITH TWO COATS ENAMEL PAINT. COLOR: BLUE.
8. PROVIDE PLASTIC LAMINATE SIGN. 'RESTROOM SHUT-OFF VALVES' ON CEILING TILE.
9. GAS PRESSURE REGULATOR. LB/OZ SIZED FOR 1500 CFH. SEE DETAIL 2/P2.1.
10. PIPE 1-1/2" GAS LINE AT 1 PSIG TO BOILER GAS TRAIN AND REGULATOR. PIPE GAS REGULATOR VENT TO OUTSIDE.
11. COORDIANTE LOCATION OF SERVICE SINK WITH RESTROOM ACCESSORIES THAT ARE RECESSED IN THE WALL.
12. DROP PIPING IN STUD WALL BETWEEN WALL INSULATION AND SHEET ROCK. PROTECT PIPING FROM FREEZING.

GENERAL NOTES

LEGEND

AIR NATIONAL GUARD — CIVIL ENGINEERING

UTAH AIR NATIONAL GUARD BASE

765 NORTH 2200 WEST
SALT LAKE CITY, UTAH
84116-2999

ENLARGED PLUMBING PLANS

REGISTERED PROFESSIONAL ENGINEER — # 117077 — WAYNE CLARK PETERSON — STATE OF UTAH

ELECTRONIC SECURITY SQUADRON FACILITY – UTAH AIR NATIONAL GUARD
PROJ. NO. USEB 939661

FFKR Architects Planners II
132 Pierpont Ave. Suite 200
Salt Lake City, Utah 84101
Telephone 801 521-8183

DATE: APRIL 1, 1996
REVISED:
CHECKED BY: P.W.L.
DRAWN BY: G.K.S.

DRAWING NO: P4.1

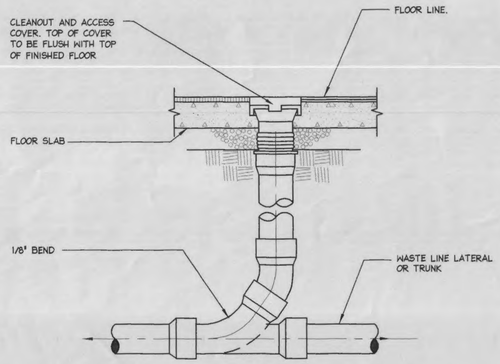

FLOOR CLEANOUT DETAIL 7 / P5.1

NOT TO SCALE

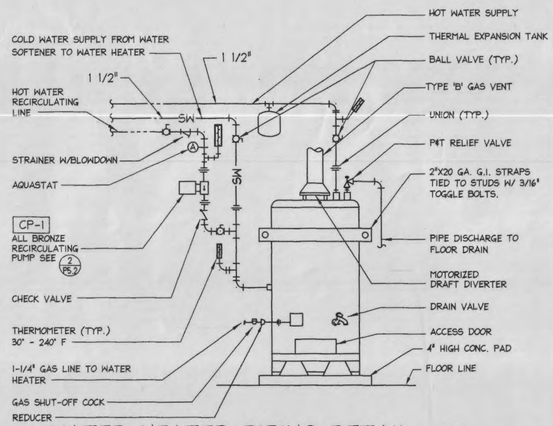

WATER HEATER PIPING DETAIL 4 / P5.1

NOT TO SCALE

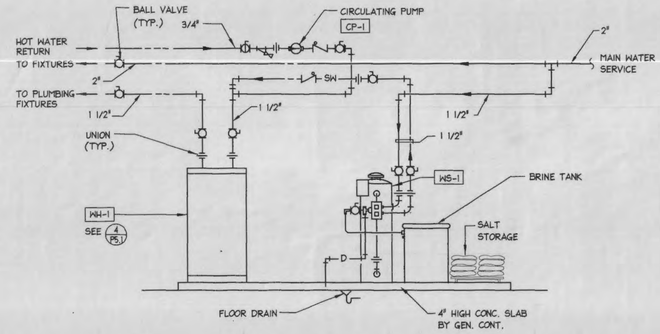

WATER SOFTENER PIPING SCHEMATIC 1 / P5.1

NOT TO SCALE

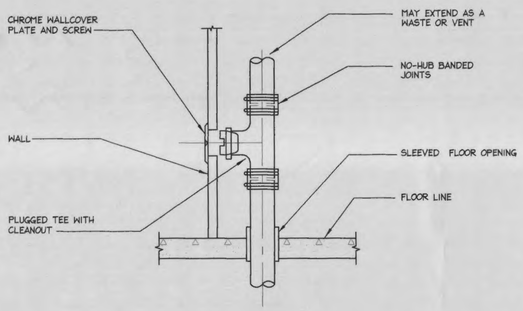

WALL CLEANOUT DETAIL 8 / P5.1

NOT TO SCALE

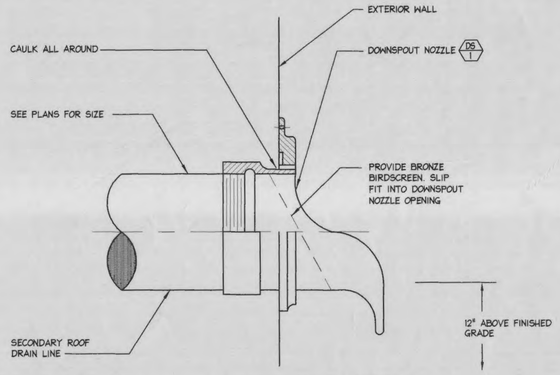

DOWNSPOUT NOZZLE DETAIL 5 / P5.1

NOT TO SCALE

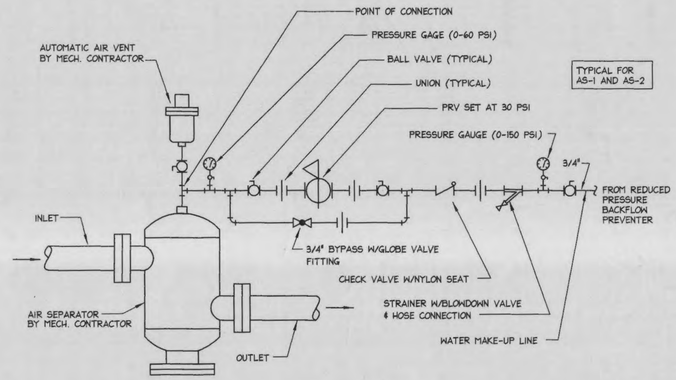

AIR SEPARATOR DETAIL 2 / P5.1

NOT TO SCALE

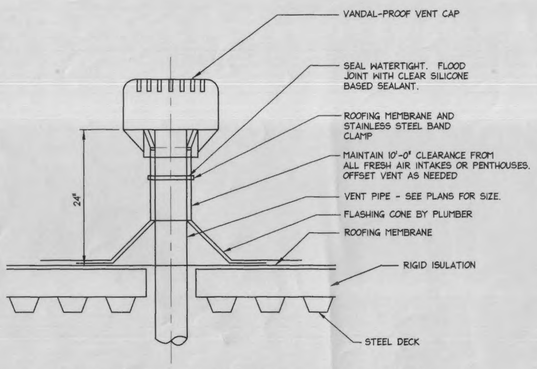

VANDAL-PROOF VENT THRU ROOF DETAIL 9 / P5.1

NOT TO SCALE

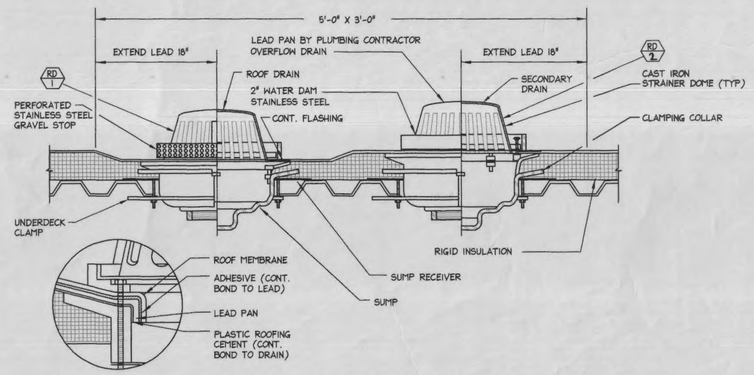

ROOF DRAIN DETAIL 6 / P5.1

NOT TO SCALE

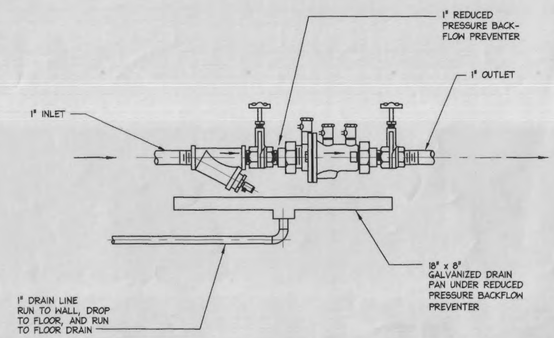

REDUCED PRESSURE BACKFLOW PREVENTER DETAIL 3 / P5.1

NOT TO SCALE

REFERENCE NOTES

GENERAL NOTES

LEGEND

AIR NATIONAL GUARD CIVIL ENGINEERING

UTAH AIR NATIONAL GUARD BASE

785 NORTH 2200 WEST
SALT LAKE CITY, UTAH
84116-2999

PLUMBING DETAILS

REGISTERED PROFESSIONAL ENGINEER # 117077 WAYNE CLARK PETERSON STATE OF UTAH

ELECTRONIC SECURITY SQUADRON FACILITY – UTAH AIR NATIONAL GUARD
PROJ. NO. USEB 939661

FFKR Architects Planners II
132 Pierpont Ave. Suite 200
Salt Lake City, Utah 84101
Telephone 801 521-8183

DATE: APRIL 1, 1996
REVISED:
CHECKED BY: P.W.L.
DRAWN BY: M.K./D.K.S.

DRAWING NO: P5.1

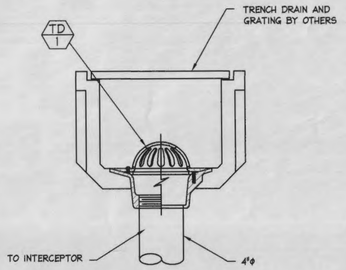

BEEHIVE DRAIN DETAIL (7) P5.2
NOT TO SCALE

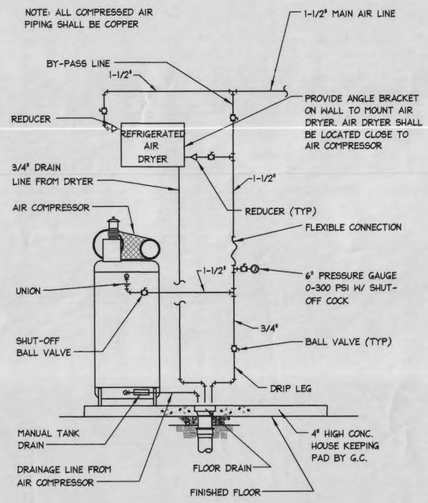

AIR COMPRESSOR & DRYER PIPING DETAIL (4) P5.2
NOT TO SCALE

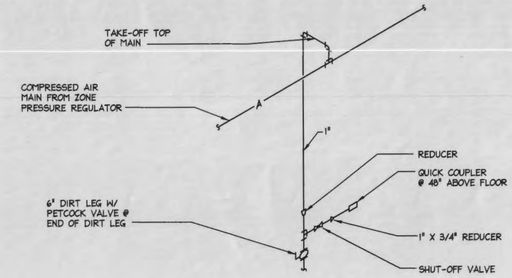

AIR OUTLET DETAIL (1) P5.2
NOT TO SCALE

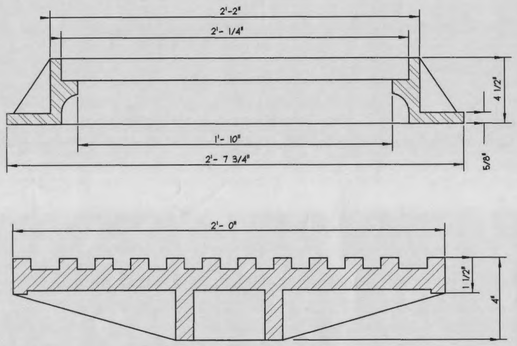

RING & COVER DETAIL (8) P5.2
NOT TO SCALE

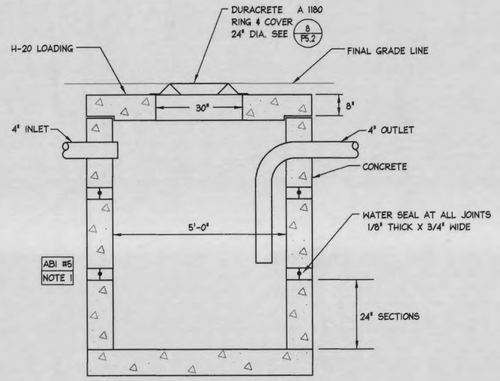

SAMPLING MANHOLE (5) P5.2
NOT TO SCALE

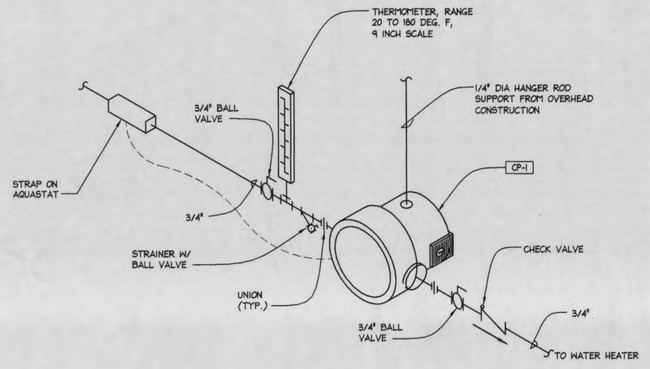

HOT WATER RECIRCULATING PUMP DETAIL (2) P5.2
NOT TO SCALE

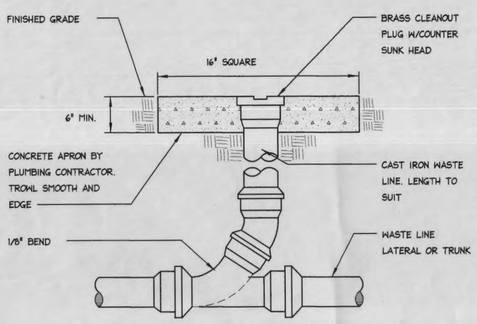

CLEANOUT TO GRADE DETAIL (9) P5.2
NOT TO SCALE

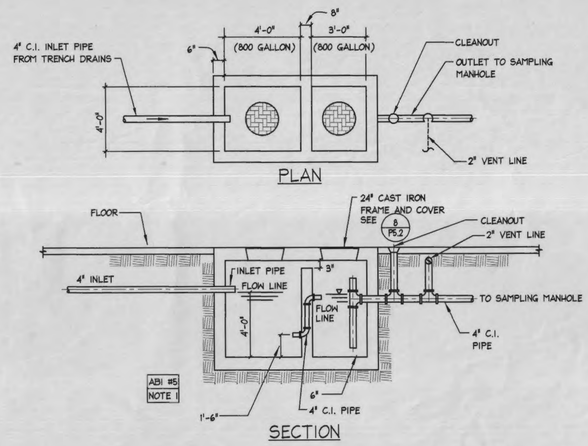

OIL/WATER SEPARATOR (6) P5.2
NOT TO SCALE

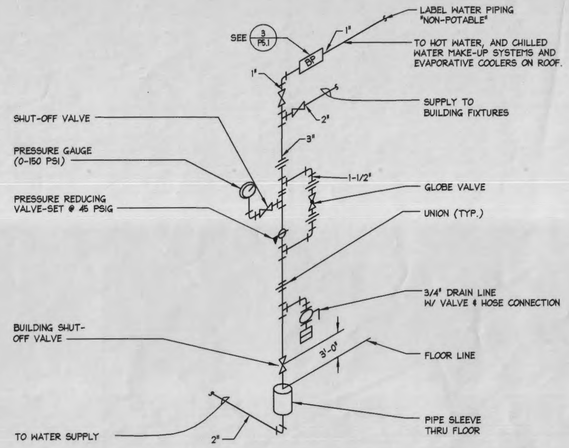

BUILDING WATER CONTROL VALVE (3) P5.2
NOT TO SCALE

REFERENCE NOTES

GENERAL NOTES

1. FURNISHING AND INSTALLATION OF THE OIL/WATER SEPARATOR AND THE SAMPLING MANHOLE SHALL BE CONSIDERED AS ALTERNATE BID ITEM (ABI) NO. 5. DO NOT FURNISH OR INSTALL THE OIL/WATER SEPARATOR OR THE SAMPLING MANHOLE UNLESS ABI#5 IS SELECTED. PROVIDE CONTINUOUS WASTE LINE IF ABI#5 IS NOT SELECTED.

LEGEND

AIR NATIONAL GUARD CIVIL ENGINEERING

UTAH AIR NATIONAL GUARD BASE
785 NORTH 2200 WEST
SALT LAKE CITY, UTAH
84116-2999

PLUMBING DETAILS

REGISTERED PROFESSIONAL ENGINEER # 117077 WAYNE CLARK PETERSON STATE OF UTAH

ELECTRONIC SECURITY SQUADRON FACILITY – UTAH AIR NATIONAL GUARD
PROJ. NO. USEB 939661

FFKR Architects Planners II
132 Pierpont Ave. Suite 200
Salt Lake City, Utah 84101
Telephone 801 521-6186

DATE: APRIL 1, 1996	DRAWING NO: P5.2
REVISED:	
CHECKED BY: P.W.L.	
DRAWN BY: M.K./D.K.S.	

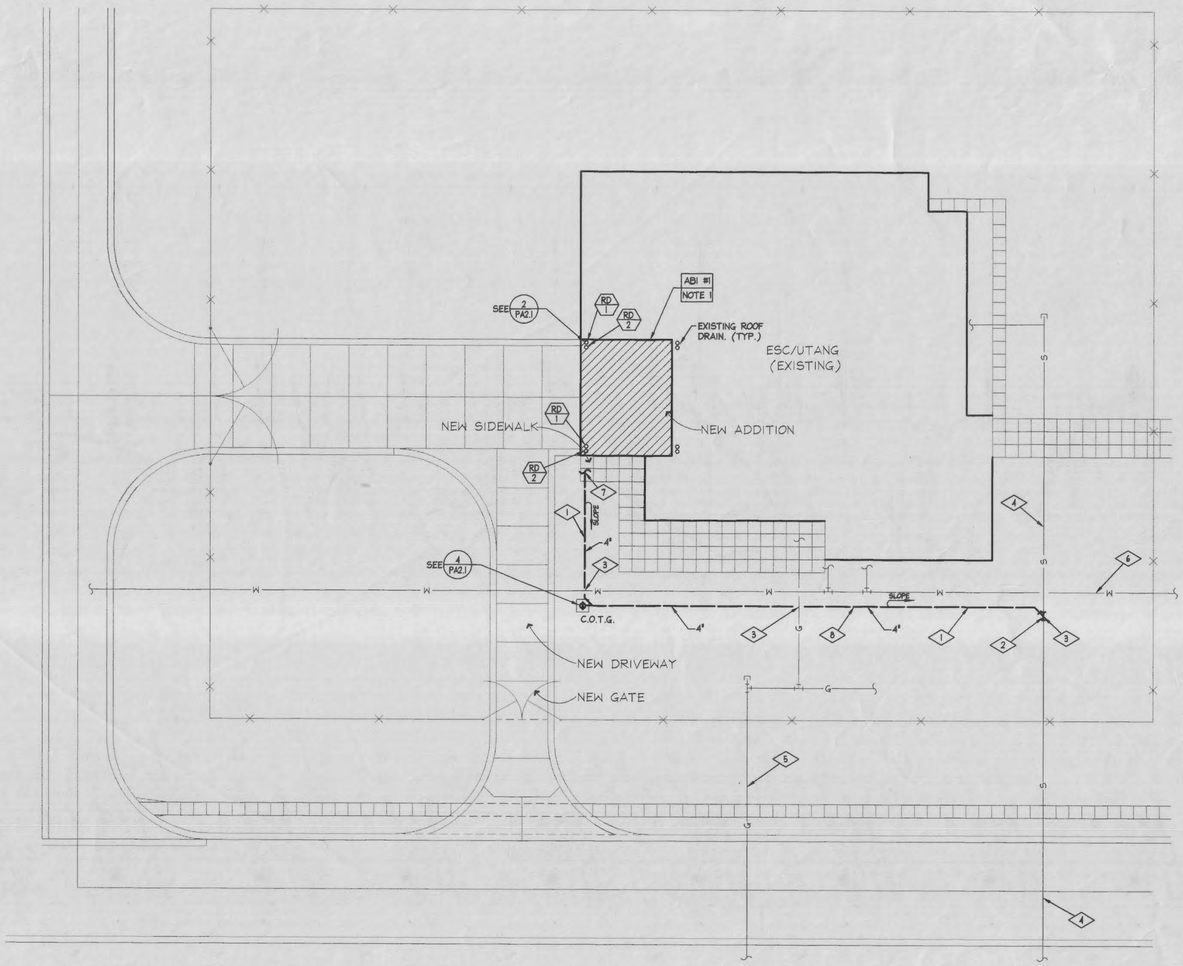

SITE PLAN

SCALE= 1" = 20'-0"

N

PLUMBING FIXTURE SCHEDULE

SYMBOL	FIXTURE	WASTE	VENT	C.W.	H.W.	NOTES
RD 1	ROOF DRAIN	2"	--	--	--	TO MATCH EXISTING
RD 2	ROOF DRAIN	2"	--	--	--	TO MATCH EXISTING
HB 1	HOSE BIBB (EXISTING)	--	--	3/4"	--	TO BE RELOCATED
OI 1	OIL/WATER SEPARATOR	2"	2"	--	--	PROVIDE EXTRA HEAVY DUTY TRAFFIC COVER
TD 1	TRENCH DRAIN	2"	2"	--	--	PROVIDE DOMED STRAINER HEAD (1)

ABI #5 NOTE 2

NOTE:
1. TRENCH DRAIN TO FIT INSIDE PRE-CAST POLYMER CONCRETE DRAIN.

REFERENCE NOTES

1. NEW 4" WASTE LINE FROM OIL INTERCEPTOR TO EXISTING SEWER LINE.
2. CONNECT NEW 4" WASTE LINE TO EXISTING SEWER LINE.
3. VERIFY LOCATION OF UNDERGROUND UTILITIES BEFORE BEGINNING CONSTRUCTION.
4. EXISTING SEWER LINE.
5. EXISTING GAS LINE.
6. EXISTING WATER LINE.
7. FOR CONTINUATION OF PIPING SEE SHEET PA2.1
8. SLOPE LINE 0.05% OR 1/16" PER LIN. FT.

GENERAL NOTES

1. ALL REMODEL WORK FOR THIS BUILDING SHALL BE CONSIDERED AS ALTERNATE BID ITEM (ABI) NO. 1. NO MECHANICAL OR PLUMBING WORK SHALL BE PERFORMED UNLESS ABI/#1 IS SELECTED.
2. FURNISHING AND INSTALLATION OF THE OIL/WATER SEPARATOR SHALL BE CONSIDERED AS ALTERNATE BID ITEM NO. 5. DO NOT FURNISH OR INSTALL THE OIL/WATER SEPARATOR UNLESS ABI/#5 IS SELECTED. PROVIDE CONTINUOUS WASTE LINE IF ABI/#5 IS NOT SELECTED.

LEGEND

AIR NATIONAL GUARD CIVIL ENGINEERING

UTAH AIR NATIONAL GUARD BASE

785 NORTH 2200 WEST
SALT LAKE CITY, UTAH
84116-2998

PLUMBING SITE PLAN

REGISTERED PROFESSIONAL ENGINEER # 117077 WAYNE CLARK PETERSON STATE OF UTAH

ELECTRONIC SECURITY SQUADRON FACILITY – UTAH AIR NATIONAL GUARD
PROJ. NO. USEB 939661

FFKR Architects Planners
132 Pierpont Ave. Suite 200
Salt Lake City, Utah 84101
Telephone 801 521-8183

DATE: APRIL 1, 1996
REVISED:
CHECKED BY: P.W.L.
DRAWN BY: M.K./G.K.S.

DRAWING NO: PA1.1

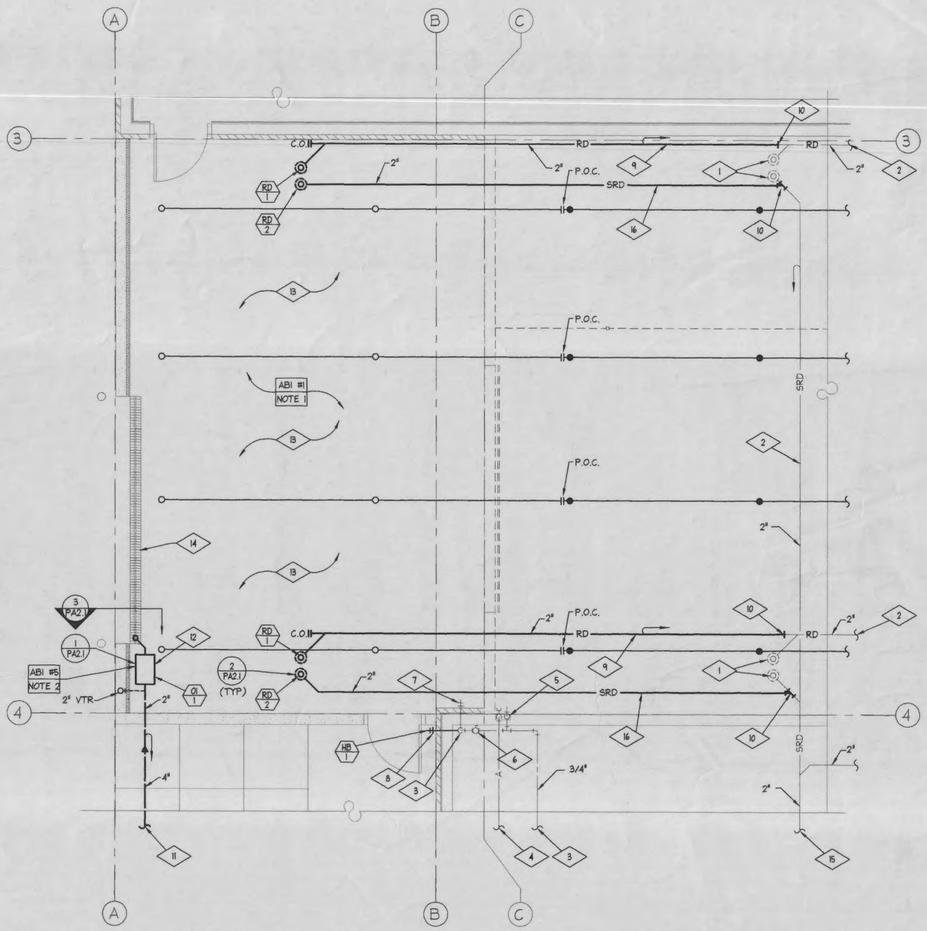

PLUMBING AND FIRE PROTECTION PLAN

SCALE: 1/4"=1'-0"

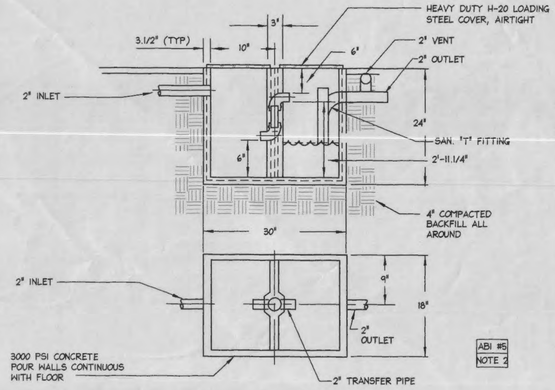

OIL/WATER SEPARATOR DETAIL (1 / PA2.1)

NOT TO SCALE

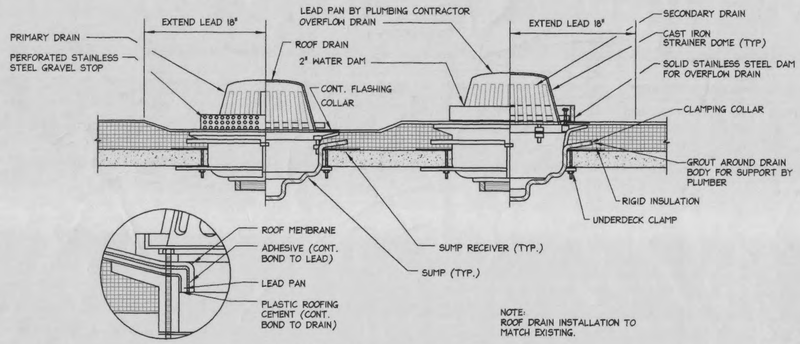

ROOF DRAIN DETAIL (2 / PA2.1)

NOT TO SCALE

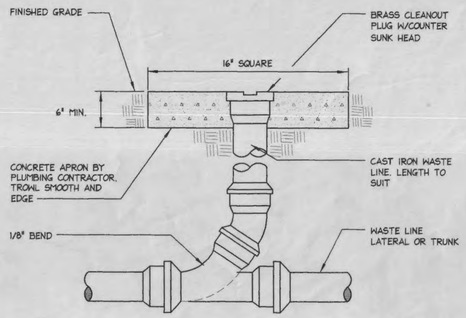

CLEANOUT TO GRADE DETAIL (4 / PA2.1)

NOT TO SCALE

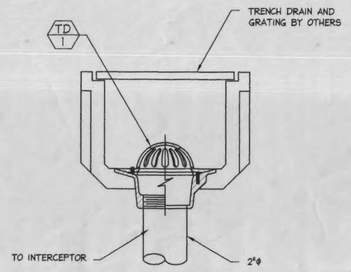

BEEHIVE DRAIN DETAIL (3 / PA2.1)

NOT TO SCALE

REFERENCE NOTES

1. EXISTING ROOF DRAINS TO REMAIN.
2. EXISTING 2" ROOF DRAIN LINE TO REMAIN.
3. 3/4" COLD WATER SUPPLY LINE TO REMAIN.
4. EXISTING AIR SUPPLY LINE TO REMAIN.
5. EXISTING COLD WATER LINE DROP IN IN WALL TO REMAIN.
6. EXISTING SHUT-OFF VALVE TO HOSE BIBB TO REMAIN.
7. EXISTING HOSE BIBB TO BE RELOCATED, SEE NOTE 8.
8. NEW LOCATION FOR HOSE BIBB.
9. NEW 2" ROOF DRAIN LINE.
10. NEW ROOF DRAIN LINE TO BE CONNECTED TO EXISTING.
11. FOR CONTINUATION OF WASTE LINE SEE SHEET PA1.1
12. OIL/WATER SEPARATOR.
13. EXTEND THE EXISTING FIRE PROTECTION SPRINKLER LINES TO THE NEW ADDITION. NEW SPRINKLER HEADS TO MATCH EXISTING FOR SIZE AND LOCATION.
14. TRENCH DRAIN BY GENERAL CONTRACTOR.
15. EXISTING 2" SECONDARY ROOF DRAIN LINE TO REMAIN.
16. NEW 2" SECONDARY ROOF DRAIN LINE.

GENERAL NOTES

1. ALL REMODEL WORK FOR THIS BUILDING SHALL BE CONSIDERED AS ALTERNATE BID ITEM (ABI) NO. 1. NO MECHANICAL OR PLUMBING WORK SHALL BE PERFORMED UNLESS ABI/#1 IS SELECTED.
2. FURNISHING AND INSTALLATION OF THE OIL/WATER SEPARATOR SHALL BE CONSIDERED AS ALTERNATE BID ITEM NO. 5. DO NOT FURNISH OR INSTALL THE OIL/WATER SEPARATOR UNLESS ABI/#5 IS SELECTED. PROVIDE CONTINUOUS WASTE LINE IF ABI/#5 IS NOT SELECTED.

LEGEND

AIR NATIONAL GUARD CIVIL ENGINEERING

UTAH AIR NATIONAL GUARD BASE

765 NORTH 2200 WEST
SALT LAKE CITY, UTAH
84116-2999

PLUMBING PLAN & DETAILS

REGISTERED PROFESSIONAL ENGINEER # 117077 WAYNE CLARK PETERSON STATE OF UTAH

ELECTRONIC SECURITY SQUADRON FACILITY – UTAH AIR NATIONAL GUARD
PROJ. NO. USEB 939661

FFKR Architects Planners
132 Pierpont Ave. Suite 200
Salt Lake City, Utah 84101
Telephone 801 521-8183

DATE: APRIL 1, 1996
REVISED:
CHECKED BY: P.W.L.
DRAWN BY: M.K./D.K.S.

DRAWING NO: PA2.1

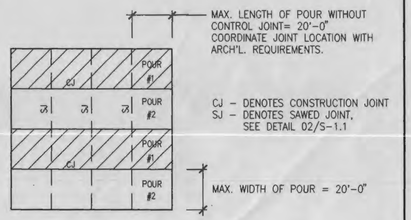

SLAB CONTROL JOINT CRITERIA

DETAIL 01

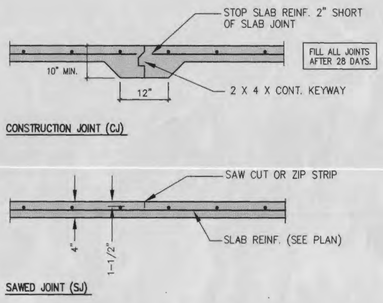

TYPICAL SLAB JOINT DETAILS

DETAIL 02

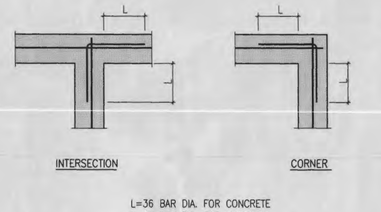

WALL INTERSECTION DOWELS

DETAIL 03

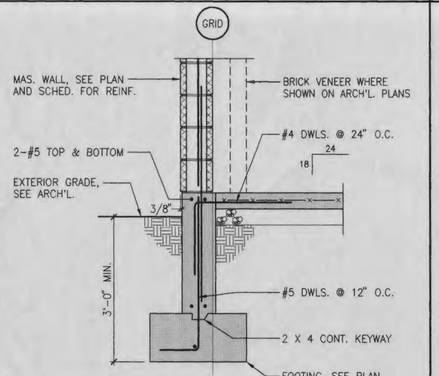

DETAIL 04

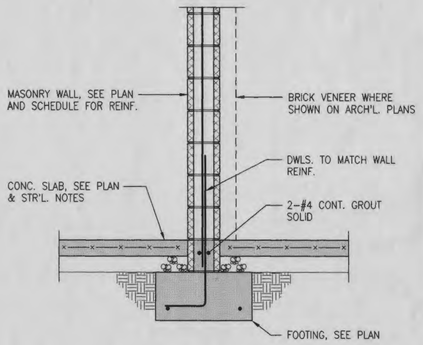

DETAIL 05

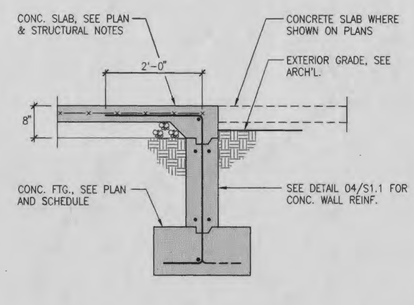

DETAIL 06

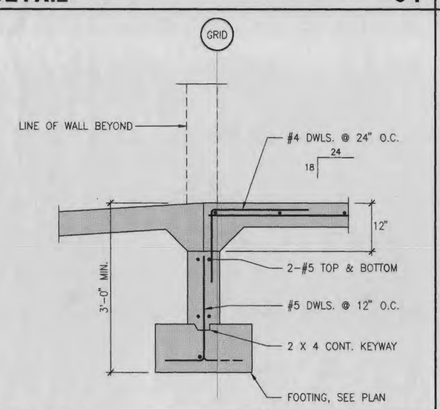

DETAIL 07

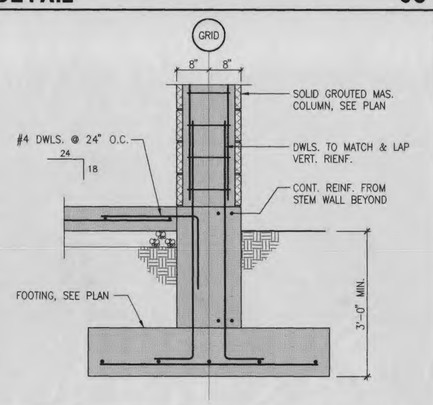

DETAIL 08

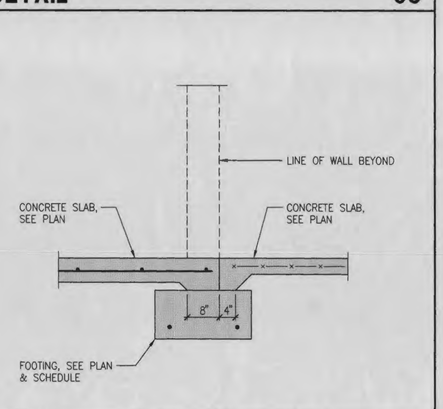

DETAIL 09

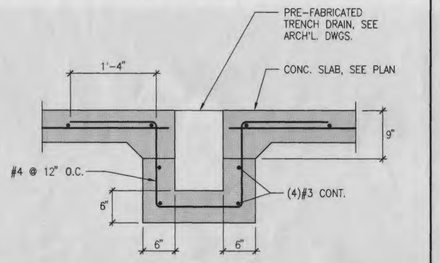

DETAIL 10

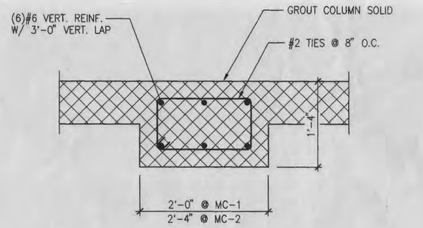

MASONRY COLUMN

DETAIL 11

DETAIL 12

STRUCTURAL NOTES

GENERAL

ALL DESIGN, CONSTRUCTION, AND INSPECTION SHALL BE IN CONFORMANCE WITH THE LATEST EDITION OF THE UNIFORM BUILDING CODE (1994).

THE CONTRACTOR SHALL VERIFY ALL DIMENSIONS AND CONDITIONS AT THE SITE.

ALL OMISSIONS OR CONFLICTS BETWEEN THE VARIOUS ELEMENTS OF THE WORKING DRAWINGS AND/OR SPECIFICATIONS SHALL BE BROUGHT TO THE ATTENTION OF THE CONTRACTING OFFICER BEFORE PROCEEDING WITH ANY WORK INVOLVED.

CONTRACTOR SHALL BE RESPONSIBLE FOR SAFETY AND PROTECTION WITHIN AND ADJACENT TO THE JOB SITE.

TEMPORARY BRACING SHALL BE PROVIDED WHEREVER NECESSARY TO TAKE CARE OF ALL LOADS TO WHICH THE STRUCTURE MAY BE SUBJECTED INCLUDING WIND. SUCH BRACING SHALL BE LEFT IN PLACE AS LONG AS MAY BE REQUIRED FOR SAFETY OR UNTIL ALL THE STRUCTURAL ELEMENTS ARE COMPLETE.

DURING AND AFTER CONSTRUCTION THE CONTRACTOR AND/OR OWNER SHALL KEEP LOADS ON THE STRUCTURE WITHIN THE LIMITS OF THE DESIGN LOADS.

THE GENERAL CONTRACTOR SHALL HAVE SHOP DRAWINGS REVIEWED BY THE CONTRACTING OFFICER PRIOR TO THE FABRICATION OR ERECTION FOR THE FOLLOWING ITEMS: REINFORCING STEEL, STRUCTURAL STEEL, MISCELLANEOUS METALS, PREFABRICATED WOOD JOISTS, PREFABRICATED STEEL JOISTS, PREFABRICATED WOOD TRUSSES AND GLU-LAM BEAMS.

ALL DETAILS, SECTIONS, AND NOTES ARE INTENDED TO BE TYPICAL AND SHALL APPLY TO SIMILAR SITUATIONS UNLESS NOTED OR SHOWN OTHERWISE.

REFER TO THE SPECIFICATIONS FOR ADDITIONAL INFORMATION NOT COVERED ON THE DRAWINGS.

OBSERVATION VISITS TO THE JOB SITE BY FIELD REPRESENTATIVES OF CALDER-KANKAINEN SHALL NEITHER BE CONSTRUED AS INSPECTION NOR APPROVAL OF CONSTRUCTION.

SIZES, LOCATIONS, AND ANCHORAGES OF EQUIPMENT SHALL BE VERIFIED IN THE FIELD WITH EQUIPMENT MANUFACTURERS (SUPPLIERS) PRIOR TO PLACING CONCRETE OR FABRICATING STEEL.

FOOTINGS

ALL FOOTINGS SHALL BEAR 12" MINIMUM INTO ORIGINAL UNDISTURBED EARTH OR ON ENGINEERED FILL COMPACTED TO 95% OF MAXIMUM RELATIVE DENSITY BASED ON ASTM D1557-91. SUCH FILL SHALL BE PLACED IN LAYERS NOT TO EXCEED 6" IN DEPTH AFTER COMPACTION AND SHALL EXTEND DOWN ~~TO IN-SITU GRANULAR SOILS~~ 2'-0" BELOW FOOTING, AND 2'-0" WIDER THAN FOOTING.
EXTERIOR WALL FOOTINGS SHALL BEAR AT A MINIMUM DEPTH OF 2'-6" BELOW FINISHED EXTERIOR GRADE.

NO FOOTINGS SHALL BE PLACED IN WATER OR ON FROZEN GROUND.

ANY SOIL CONDITION ENCOUNTERED DURING EXCAVATION THAT IS CONTRARY TO THE CONDITIONS USED FOR DESIGN OF FOOTINGS AS OUTLINED IN THE SOILS REPORT BY AGRA EARTH & ENVIRONMENTAL (DATED 11/4/94), OR ON THE DRAWINGS SHALL BE BROUGHT TO THE ATTENTION OF THE CONTRACTING OFFICER BEFORE PROCEEDING.

CONCRETE

CONCRETE SHALL ATTAIN THE FOLLOWING MINIMUM COMPRESSIVE STRENGTHS AT 28 DAYS:
FOOTINGS & FOUNDATION WALLS.....3000 PSI
INTERIOR SLABS ON GRADE & SUSPENDED SLABS.....3500 PSI
BEAMS, COLUMNS, SUSPENDED SLABS.....4000 PSI
EXTERIOR FLAT WORK.....4000 PSI

A STATEMENT OF MIX DESIGN FOR ALL CONCRETE SHALL BE SUBMITTED TO AND REVIEWED BY THE CONTRACTING OFFICER PRIOR TO COMMENCING WORK.

ALL CONCRETE WORK SHALL BE PLACED, CURED, STRIPPED, AND PROTECTED AS DIRECTED BY THE SPECIFICATIONS AND ACI STANDARDS AND PRACTICES.

UNLESS NOTED OTHERWISE ON THE DRAWINGS, REINFORCE CONCRETE WALLS AS FOLLOWS:
6" WALL #4 @ 15" HOR., #4 @ 18" VERT..IN CENTER OF WALL
8" WALL #5 @ 18" HOR., #4 @ 18" VERT..IN CENTER OF WALL
10" WALL #5 @ 15" HOR., #4 @ 16" VERT..IN CENTER OF WALL

DOWEL VERTICAL BARS 30 DIAMETERS INTO STRUCTURE ABOVE AND FOOTINGS BELOW. IN ADDITION, PROVIDE 2-#5 CONTINUOUS BARS TOP AND BOTTOM OF 6" AND 8" WALLS AND 2-#6 BARS TOP AND BOTTOM OF WALLS 10" OR THICKER.

BEFORE CONCRETE IS POURED CHECK WITH ALL TRADES TO ENSURE PROPER PLACEMENT OF ALL OPENINGS, SLEEVES, CURBS, CONDUITS, BOLTS, INSERTS, ETC. RELATIVE TO WORK.

ADD 2-#5 BARS AROUND ALL OPENINGS (UNLESS OTHERWISE NOTED) AND EXTEND 24" BEYOND CORNER OF OPENING.

ALL SLABS ON GRADE SHALL BE PLACED IN ALTERNATE PANELS WITH A MAXIMUM WIDTH OF 20' BETWEEN CONTROL OR CONSTRUCTION JOINTS; REFER TO TYPICAL DETAILS ON DRAWINGS. UNLESS OTHERWISE NOTED, SLABS ON GRADE SHALL BE 4" THICK AND SHALL BE REINFORCED WITH 6 x 6 – W1.4 x W1.4 WELDED WIRE FABRIC.

PROVIDE A #3 NOSING BAR IN ALL STAIR TREADS.

REFER TO DRAWINGS FOR TYPICAL CONSTRUCTION JOINT DETAILS. UNLESS NOTED IN DRAWINGS, ALL REINFORCEMENT SHALL BE CONTINUOUS THRU JOINTS AND EACH CONSTRUCTION JOINT SHALL BE KEYED.

FORMS, SCREEDS, AND BEAMS SUPPORTING SUSPENDED CONCRETE SHALL BE CAMBERED 1/4 INCHES PER 10 FEET OF SPAN TO COMPENSATE FOR DEAD LOAD DEFLECTIONS.

THE EXTENT OF SUSPENDED SLAB POURS SHALL BE FROM CENTERLINE TO CENTERLINE OF SPANS AND SHALL NOT EXCEED 3000 SF OR 64' IN ANY ONE DIRECTION.

MASONRY (CONCRETE MASONRY UNITS)

ALL MASONRY SHALL BE REINFORCED WITH BOTH HORIZONTAL AND VERTICAL REINFORCEMENT. ALL BLOCK CELLS OR BRICK CAVITIES WITH REINFORCEMENT SHALL BE GROUTED FULL USING CONCRETE 2000 PSI GROUT. CELLS SHALL BE ALIGNED TO PRESERVE UNOBSTRUCTED VERTICAL CAVITIES OF 2" x 3" MINIMUM.

AN ADDITIONAL VERTICAL BAR (MATCHING WALL REINFORCEMENT) SHALL BE PLACED AT EACH CORNER, END OF WALL, AND JAMB OF ALL OPENINGS.

TYPICAL HORIZONTAL BARS (U.N.O.) SHALL BE PLACED IN BOND BEAMS FILLED WITH GROUT AT THE TOP OF ALL WALLS; AT 48" O.C. MAXIMUM BETWEEN TOP OF WALL AND FOUNDATION; AND ABOVE AND BELOW ALL OPENINGS. BOND BEAM UNITS SHALL CONTINUE UNINTERRUPTED AROUND ALL CORNERS AND WALL INTERSECTIONS. WHERE STRUCTURAL STEEL COLUMNS OR BEAMS INTERRUPT THE CONTINUITY OF A BOND BEAM, DOWELS MATCHING BOND BEAM REINFORCEMENT SHALL BE WELDED TO THE STRUCTURAL STEEL TO PROVIDE CONTINUITY.

ALL VERTICAL REINFORCING BARS SHALL BE DOWELLED TO STRUCTURE ABOVE AND BELOW WITH BARS OF SAME SIZE AND SPACING. LAP ALL SPLICES IN MASONRY 48 BAR DIAMETERS. PLACE ALL BARS SECURELY PRIOR TO GROUTING.

MASONRY REINFORCEMENT: THE MINIMUM REINFORCEMENT FOR ALL MASONRY WALLS SHALL BE AS FOLLOWS:

12 IN. WALLS: #6 @ 32 IN. O.C. IN VERTICAL CELLS & 2-#4 @ 48 IN. O.C. IN BLOCK UNIT HORIZONTALLY GROUTED.
10 IN. WALLS: #5 @ 32 IN. O.C. IN VERTICAL GROUTED CELLS & 2-#4 @ 48 IN. O.C. IN BLOCK UNIT HORIZONTALLY GROUTED.
8 IN. WALLS: #5 @ 32 IN. O.C. IN VERTICAL GROUTED CELLS & 2-#3 @ 48 IN. O.C. IN BLOCK UNIT HORIZONTALLY GROUTED.
6 IN. WALLS: #4 @ 32 IN. O.C. IN VERTICAL GROUTED CELLS & 1-#4 @ 48 IN. O.C. IN BLOCK UNIT HORIZONTALLY GROUTED.
IN ADDITION LADDER-TYPE REINFORCING CONSISTING OF 2-#9 WIRES SHALL BE USED AT 16 IN. O.C. HORIZONTALLY IN ALL MASONRY WALLS.

CONCRETE MASONRY UNITS SHALL BE GRADE N UNITS CONFORMING TO ASTM DESIGNATION C90 AND SHALL HAVE A MINIMUM ULTIMATE COMPRESSIVE STRENGTH OF 1900 PSI ON THE NET SECTION.

MORTAR SHALL BE TYPE "S" AND SHALL HAVE THE FOLLOWING PROPORTIONS BY VOLUMES:
PORTLAND CEMENT . . . . . 1 PART
HYDRATED LIME . . . . . 1/4 – 1/2 PART
DAMP, LOOSE AGGREGATE. . NOT LESS THAN 2-1/4 & NOT MORE THAN (3) TIMES THE SUM OF CEMENT AND LIME USED.

STOP GROUT POURS 1/2" BELOW TOP OF BLOCK UNITS.

ALL ANCHOR BOLTS MUST BE PLACED IN OVERSIZED HOLES IN GROUTED CELLS.

NO MASONRY SHALL BE LAID WHEN THE TEMPERATURE OF THE OUTSIDE AIR IS BELOW 40 DEG. F., UNLESS APPROVED METHODS ARE USED DURING CONSTRUCTION TO PREVENT DAMAGE TO THE MASONRY. SUCH METHODS SHALL INCLUDE PROTECTION OF THE MASONRY FOR A PERIOD OF AT LEAST 48 HOURS.

ALL REINFORCING SHALL BE IN PLACE PRIOR TO GROUTING. VERTICAL REINFORCING BARS SHALL BE HELD IN POSITION AT THE TOP, BOTTOM AND AT INTERVALS NOT FARTHER APART THAN 200 BAR DIAMETERS.

UNLESS INDICATED OTHERWISE ON THE DRAWINGS OR IN THE SPECIFICATIONS, MASONRY GROUTING SHALL COMPLY WITH THE PROVISIONS OF UBC; IN PARTICULAR, UBC 1991 EDITION SECTION 2404(f) 1 & 2.

ALL MASONRY WALLS SHALL HAVE VERTICAL CONTROL JOINTS AT: MAJOR CHANGES IN WALL HEIGHT, AT CHANGES IN WALL THICKNESS, AT BUILDING CONSTRUCTION JOINTS, AND NOT FARTHER APART THAN 40 FEET ELSEWHERE. PROVIDE MATCHING CONTROL JOINTS FOR BRICK VENEER. CONSULT ARCHITECTURAL DRAWINGS FOR LOCATIONS. VERTICAL CELLS EACH SIDE OF CONTROL JOINTS SHALL BE GROUTED AND REINFORCED WITH REBARS TO MATCH VERTICAL REINFORCEMENT USED THROUGHOUT THAT WALL. ONLY HORIZONTAL REBARS IN BOND BEAMS AT FLOORS AND AT ROOF LEVEL SHALL CONTINUE THROUGH CONTROL JOINTS.

REINFORCING STEEL

ALL REINFORCEMENT SHALL BE DETAILED AND PLACED IN ACCORDANCE WITH ACI DETAILING MANUAL 315-80 AND ACI STANDARD 318-89.

REINFORCING STEEL SHALL BE ASTM A615 GRADE 60.

WELDED WIRE FABRIC SHALL CONFORM TO ASTM A185. LAP ONE MESH TIE.

ALL REINFORCEMENT SHALL BE SECURELY TIED AND HELD IN PLACE.

ALL CONTINUOUS REINFORCEMENT SHALL TERMINATE WITH A 90 DEG. TURN OR A SEPARATE CORNER BAR. ALL SPLICES SHALL LAP A MINIMUM OF 36 BAR DIAMETERS (12" MINIMUM) IN CONCRETE, AND 48 DIAMETERS IN MASONRY.

COVER TO MAIN REINFORCEMENT FROM ADJACENT SURFACES SHALL BE AS FOLLOWS UNLESS SHOWN OTHERWISE:
A. UNFORMED SURFACES IN CONTACT WITH GROUND OR EXPOSED TO THE WEATHER (BOTTOM OF FOOTINGS). . . . . 3 INCHES
B. SLABS ON GRADE . . . . . 2 INCHES
C. FORMED SURFACES IN CONTACT WITH THE GROUND OR EXPOSED TO THE WEATHER (GRADE BMS, WALLS,ETC.), BEAMS AND COLUMNS. . . . . 2 INCHES
D. INTERIOR WALL SURFACES. . . . . 1 INCH
E. INTERIOR BEAMS AND COLUMNS . . . . . 1-1/2 IN.
F. IN ALL CASES MINIMUM COVER SHALL NOT BE LESS THAN THE DIAMETER OF ADJACENT BARS.

PRIOR TO FABRICATION AND PLACEMENT, SHOP DRAWINGS FOR ALL REINFORCING STEEL SHALL BE REVIEWED BY THE CONTRACTING OFFICER.

STRUCTURAL STEEL

ALL STRUCTURAL STEEL AND STRUCTURAL STEEL WORK SHALL COMPLY WITH BOTH THE AISC "MANUAL OF STEEL CONSTRUCTION" CONTAINING THE SPECIFICATIONS FOR THE DESIGN, FABRICATION AND ERECTION OF STRUCTURAL STEEL BUILDINGS, INCLUDING THE "CODE OF STANDARD PRACTICES" (LATEST EDITION), AND WITH THE UBC 1994 EDITION.

ALL STRUCTURAL STEEL SHALL BE ASTM A36, UNO.

USE A325 BOLTS FOR STEEL TO STEEL CONNECTIONS AND A307 BOLTS FOR ALL OTHER CONNECTIONS.

PRIOR TO FABRICATION AND ERECTION, SHOP DRAWINGS FOR ALL STEEL ITEMS SHALL BE REVIEWED BY THE CONTRACTING OFFICER.

ALL WELDS SHALL BE MADE WITH E70XX ELECTRODES AND BY WELDERS CERTIFIED BY AWS STANDARDS WITHIN THE PAST 12 MONTHS; PROVIDE WRITTEN CERTIFICATION IF REQUESTED.

ALL HIGH-STRENGTH BOLTS SHALL BE TIGHTENED TO THE APPROPRIATE MINIMUM BOLT TENSION IN ACCORDANCE WITH "AISC SPECIFICATIONS FOR STRUCTURAL JOINTS USING ASTM A325 OR A490 BOLTS." THE PREFERRED METHOD OF TIGHTENING IS BY USE OF A "DIRECT TENSION INDICATOR." THE TURN-OF-NUT METHOD MAY ALSO BE USED. PROVIDE CARBONIZED WASHERS UNDER THE TURNED ELEMENT.

STRUCTURAL STEEL TUBING SHALL CONFORM TO ASTM A500 GRADE B; YIELD STRESS = 46 KSI.

ALL STEEL JOISTS, JOIST GIRDERS, AND ASSOCIATED WORK SHALL COMPLY WITH THE LATEST EDITION OF THE "STANDARD SPECIFICATIONS OF THE STEEL JOIST INSTITUTE."

CONCENTRATED LOADS SHALL NOT BE PLACED ON NOR HUNG FROM JOISTS UNLESS THEY ARE PLACED AT PANEL POINTS OR A BRACE (L1-1/2x1-1/2X1/8) IS INSTALLED BETWEEN THE LOAD AND PANEL POINT. CONCENTRATED LOADS NOT SHOWN ON THE DRAWINGS SHALL BE BROUGHT TO THE ATTENTION OF THE CONTRACTING OFFICER FOR REVIEW.

SPECIAL INSPECTIONS AND TESTING OF WELDS AS REQUIRED BY UBC 1994 SHALL BE PROVIDED BY THE OWNER.

ALL BEAM CONNECTIONS, NOT SHOWN TO BE MOMENT CONNECTIONS AND NOT DETAILED OTHERWISE SHALL BE MADE USING AISC 7TH EDITION TABLE I "FRAMED BEAM CONNECTIONS" WITH THE MAXIMUM NUMBER OF ROWS SHOWN FOR THAT BEAM.

UNLESS NOTED OTHERWISE, BEAMS SUPPORTING FLOOR SYSTEMS SHALL BE CAMBERED 1/4 INCHES PER 10 FEET OF SPAN.

METAL ROOF DECK

STEEL ROOF DECK SHALL COMPLY WITH THE LATEST REQUIREMENTS OF THE STEEL DECK INSTITUTE, SDI. SUBMIT ICBO REPORT WITH SHOP DRAWINGS.

STEEL ROOF DECK SHALL BE 1.5" DEEP X 20 GAUGE PAINTED, TYPE "B" WIDE RIB DECK WITH INTERLOCKING SIDE SEAMS. THE FOLLOWING MINIMUM PROPERTIES MUST BE SATISFIED:
Fy = 38 KSI
I = .210 IN 4/FT.
Sp = .232 IN 3/FT.
Sn = .245 IN 3/FT.

WELD STEEL ROOF DECK TO SUPPORTING FRAMING MEMBERS WITH 3/4" DIAMETER PUDDLE WELDS AT THE FOLLOWING SPACINGS:
(7) WELDS PER 36-INCH SHEET TO ALL SUPPORTS PERPENDICULAR TO DECK CORRUGATIONS.
12" O.C. TO ALL SUPPORTS PARALLEL TO DECK CORRUGATIONS.

ATTACH INTERLOCKING SEAMS WITH 1.5" LONG TOP SEAM WELDS AT 18" O.C. MAXIMUM BETWEEN ADJACENT PIECES OF DECKING. CRIMP SIDE SEAMS BEFORE WELDING.

PROVIDE A 2" MINIMUM BEARING AND A 2-INCH LAP AT THE SPLICE POINTS OF ALL PIECES OF DECK.

WHERE POSSIBLE, ALL DECK SHALL BE 3-SPAN CONTINUOUS MINIMUM. IN AREAS WHERE 3-SPAN CONDITIONS ARE NOT POSSIBLE, THE DECK SHALL MEET THE LOADING CRITERIA FOR THE SPAN CONDITION. THE CONTRACTOR SHALL PROVIDE HEAVIER GAUGE DECK AS REQUIRED FOR ONE OR TWO SPAN CONDITIONS.

COMPOSITE METAL FLOOR DECK

STEEL FLOOR DECK SHALL COMPLY WITH THE LATEST REQUIREMENTS OF THE STEEL DECK INSTITUTE, SDI. SUBMIT ICBO REPORT WITH SHOP DRAWINGS.

STEEL FLOOR DECK SHALL BE 1.5" DEEP X 20 GAUGE MINIMUM GALVANIZED (G60) COMPOSITE TYPE "W" DECK WITH INTERLOCKING SIDE SEAMS. THE FOLLOWING MINIMUM PROPERTIES MUST BE SATISFIED:

Fy = 33 KSI
I = .216 IN 4/FT
Sp = .235 IN 3/FT
Sn = .248 IN 3/FT

THE TYPICAL FLOOR SLAB IS 3.5" THICK (5" OVERALL) NORMAL WEIGHT CONCRETE. REINFORCE SLAB WITH 6 X 6 – W1.4 X W1.4 WELDED WIRE FABRIC MINIMUM, UNLESS NOTED OTHERWISE.

ATTACH DECK TO SUPPORTING FRAMING MEMBERS WITH 3/4" DIAMETER PUDDLE WELDS SPACED AS FOLLOWS:

12" O.C. TO SUPPORTS PERPENDICULAR TO DECK CORRUGATIONS (4 WELDS PER SHEET).
12" O.C. TO ALL SUPPORTS PARALLEL TO DECK CORRUGATIONS.
STUD WELDS MAY TAKE THE PLACE OF PUDDLE WELDS WHERE STUDS ARE WELDED THROUGH THE DECK TO THE TOP FLANGE OF BEAMS.

ATTACH INTERLOCKING SEAMS WITH 1-1/2" TOP SEAM WELD AT 36" O.C. BETWEEN ADJACENT PIECES OF DECK. CRIMP SEAMS BEFORE WELDING.

WHERE POSSIBLE, ALL DECK SHALL BE 3-SPAN CONTINUOUS MINIMUM. IN AREAS WHERE 3-SPAN CONDITIONS ARE NOT POSSIBLE, THE DECK SHALL MEET THE LOADING CRITERIA FOR THE SPAN CONDITION. THE CONTRACTOR SHALL PROVIDE HEAVIER GAUGE DECK AND/OR SHORING AS REQUIRED.

DECK SHALL HAVE A MINIMUM BEARING LENGTH OF 2".

STRUCTURAL DESIGN LOADS

SEISMIC: ZONE III Z = .30 C = 2.75
I = 1.0 Rw = 6.0

WIND: BASIC WIND SPEED = 90 MPH, qs = 20.8, EXPOSURE "C".

SOILS: NET ALLOWABLE SOIL PRESSURE = 2500 PSF. PER SOIL REPORT #E94-2851 BY AGRA EARTH & ENVIRONMENTAL DATED 11/4/94

ROOF: DL = 20 PSF LL = 30 PSF

FLOORS: DL = 66 PSF LL = 100 PSF

REFERENCE NOTES

GENERAL NOTES

LEGEND

AIR NATIONAL GUARD CIVIL ENGINEERING

UTAH AIR NATIONAL GUARD BASE

785 NORTH 2200 WEST
SALT LAKE CITY, UTAH
84116-2999

STRUCTURAL NOTES/DETAILS

DATE: APRIL 1, 1996
REVISED:
DRAWN BY: B.J.B.

DRAWING NO: S-1.1

CALDER-KANKAINEN
CONSULTING ENGINEERS, INC.
307 West 200 So. Ste. 4002
Salt Lake City, Utah 84101
Telephone: (801) 328-2726

Reg. 260556 KURT A. SAARI 11-3-95 STATE OF UTAH

ELECTRONIC SECURITY SQUADRON FACILITY – UTAH AIR NATIONAL GUARD
PROJ. NO. USEB 939661

FFKR Architects Planners II
132 Pierpont Ave. Suite 200
Salt Lake City, Utah 84101
Telephone 801 521-6186

FOOTING SCHEDULE

MARK	WDTH	LENGTH	THICK	CROSSWISE REINF. NO.	CROSSWISE REINF. SIZE	CROSSWISE REINF. LENGTH	CROSSWISE REINF. SPA.	LENGTHWISE REINF. NO.	LENGTHWISE REINF. SIZE	LENGTHWISE REINF. LENGTH	LENGTHWISE REINF. SPA.	NOTES
F1	1'-6"	CONT.	12"	–	–	–	–	1	#4	CONT.	–	
F2	2'-0"	CONT.	12"	–	–	–	–	2	#4	CONT.	–	
F3	~~4'-0"~~	~~4'-0"~~	~~12"~~	~~4~~	~~#5~~	~~3'-6"~~	–	~~4~~	~~#5~~	~~3'-6"~~	–	NOT USED
F4	5'-0"	5'-0"	12"	5	#5	4'-6"	–	5	#5	4'-6"	–	
F5	5'-0"	8'-0"	18"	–	#5	4'-6"	12"	–	#5	7'-6"	12"	

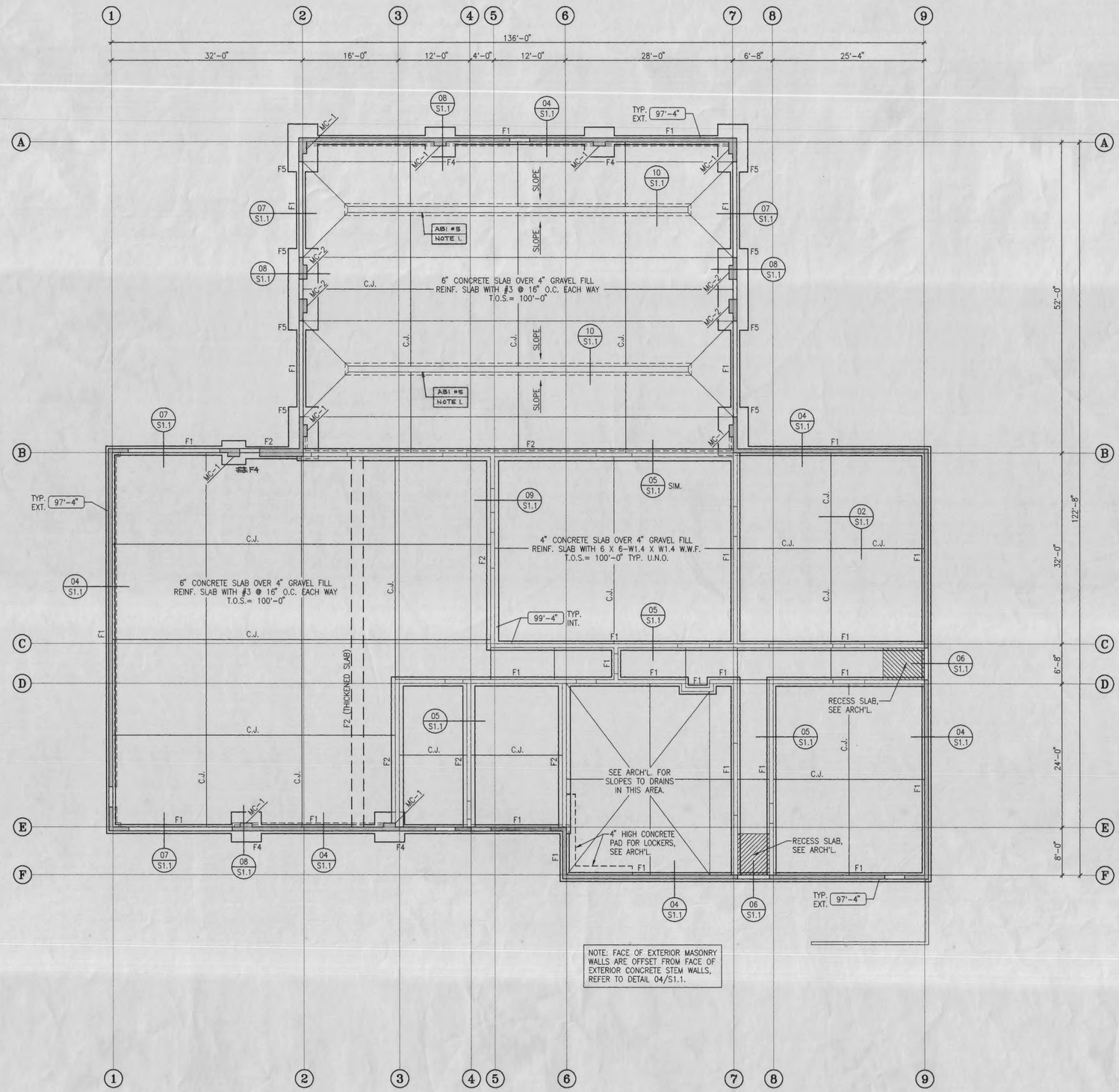

NOTE: FACE OF EXTERIOR MASONRY WALLS ARE OFFSET FROM FACE OF EXTERIOR CONCRETE STEM WALLS, REFER TO DETAIL 04/S1.1.

FOOTING & FOUNDATION PLAN

SCALE: 1/8" = 1'-0"

REFERENCE NOTES

1. ELIMINATE TRENCH DRAINS UNLESS ABI #5 IS SELECTED.

GENERAL NOTES

- SEE STRUCTURAL NOTES ON SHT. S-1.1
- CENTER ALL FOOTINGS ON WALLS OR COLUMNS ABOVE, TYP. UNLESS NOTED OTHERWISE.
- REFER TO ARCH'L. DRAWINGS FOR DIMENSIONS NOT PROVIDED.
- SEE DETAILS 01 & 02/S-1.1 FOR TYP. SLAB JOINT CRITERIA.
- SEE DETAIL 03/S-1.1 FOR TYP. WALL INTERSECTION DOWELS.

LEGEND

F1	DENOTES CONCRETE FOOTING TYPE, SEE FOOTING SCHEDULE THIS SHT.
T.O.S.	DENOTES TOP OF CONCRETE SLAB ELEVATION.
0'-0"	DENOTES TOP OF CONC. FOOTING ELEVATION.
CJ	DENOTES CONSTRUCTION JOINT, SEE DETAIL 02/S-1.1.
MC	DENOTES MASONRY COLUMN TYPE, SEE DETAIL 11/S-1.1.

AIR NATIONAL GUARD — CIVIL ENGINEERING

UTAH AIR NATIONAL GUARD BASE

785 NORTH 2200 WEST
SALT LAKE CITY, UTAH
84116-2999

FTG/FOUNDATION PLAN

CALDER-KANKAINEN
CONSULTING ENGINEERS, INC.
307 West 200 So. Ste. 4002
Salt Lake City, Utah 84101
Telephone: (801) 328-2726

No. 260558 KURT A. SMALE 11-3-95 STATE OF UTAH

ELECTRONIC SECURITY SQUADRON FACILITY – UTAH AIR NATIONAL GUARD
PROJ. NO. USEB 939661

FFKR Architects Planners II
132 Pierpont Ave. Suite 200
Salt Lake City, Utah 84101
Telephone 801 521-6186

DATE: APRIL 1, 1996
REVISED:
DRAWN BY: B.J.B.

DRAWING NO: S-2.1

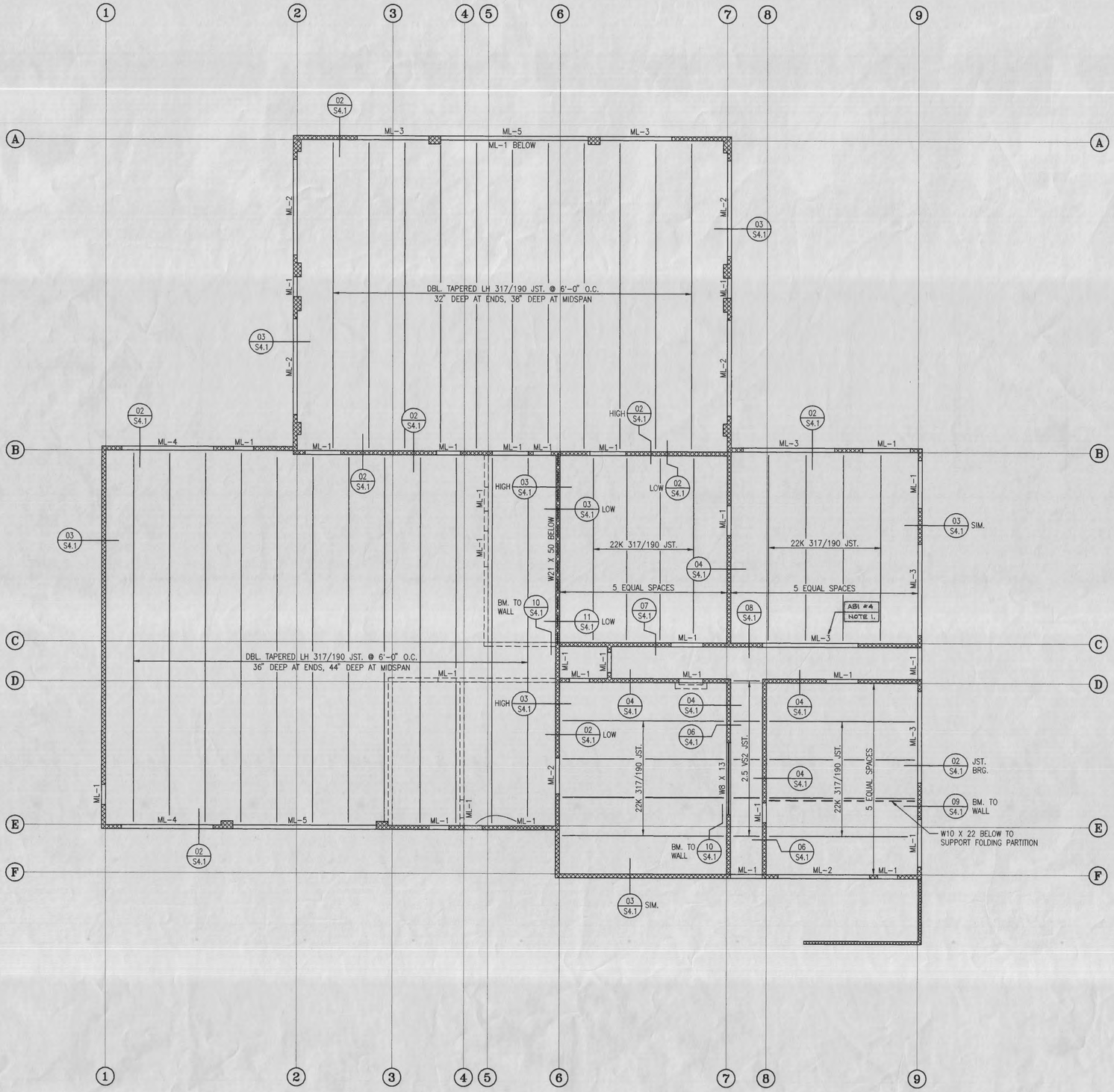

ROOF FRAMING PLAN

SCALE: 1/8" = 1'-0"

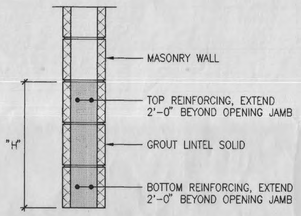

MASONRY LINTEL SCHEDULE

MARK	"H"	BOTT. REINF.	TOP REINF.	REMARKS
ML-1	1'-4"	2-#5	-	-
ML-2	2'-0"	2-#5	-	-
ML-3	2'-8"	2-#6	-	-
ML-4	4'-8"	2-#6	-	-
ML-5	6'-0"	4-#6	4-#6	2 BARS PER COURSE

NOTE: ALL MASONRY LINTELS ARE TYPE ML-1 UNLESS NOTED OTHERWISE.

REFERENCE NOTES

1. ELIMINATE FULL LENGTH GLASS BLOCK AND LINTEL ML-3 AT ADMINISTRATION UNLESS ABI #4 IS SELECTED, OTHERWISE OPNG. SHALL BE SIMILAR TO TRAINING.

GENERAL NOTES

- SEE STRUCTURAL NOTES ON SHT. S-1.1
- REFER TO STRUCTURAL NOTES FOR METAL ROOF DECK TYPE, SIZE AND ATTACHMENTS.

LEGEND

ML DENOTES MASONRY LINTEL TYPE, SEE MASONRY LINTEL SCHEDULE.

UTAH AIR NATIONAL GUARD BASE

765 NORTH 2200 WEST
SALT LAKE CITY, UTAH
84116-2999

ROOF FRAMING PLAN

DATE: APRIL 1, 1996
REVISED:
DRAWN BY: B.J.B.

DRAWING NO: S-3.1

CALDER - KANKAINEN
CONSULTING ENGINEERS, INC.
307 West 200 So. Ste. 4002
Salt Lake City, Utah 84101
Telephone: (801) 328-2726

No. 290558 KURT A. SMALL 11-3-95

ELECTRONIC SECURITY SQUADRON FACILITY – UTAH AIR NATIONAL GUARD
PROJ. NO. USEB 939661

FFKR Architects Planners II
132 Pierpont Ave. Suite 200
Salt Lake City, Utah 84101
Telephone 801 521-6186

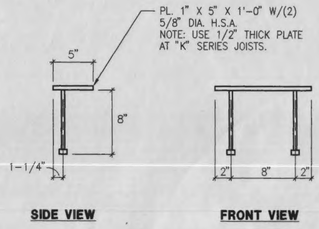

TYPICAL JOIST BEARING PLATE

DETAIL 01

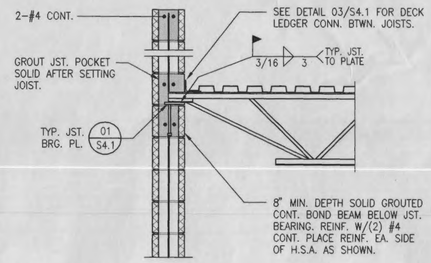

TYPICAL ROOF JOIST BEARING

DETAIL 02

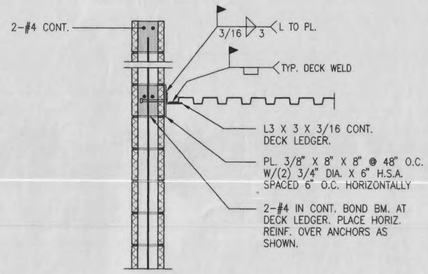

TYPICAL ROOF DECK LEDGER

DETAIL 03

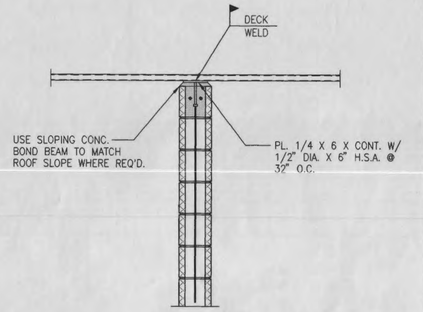

DETAIL 04

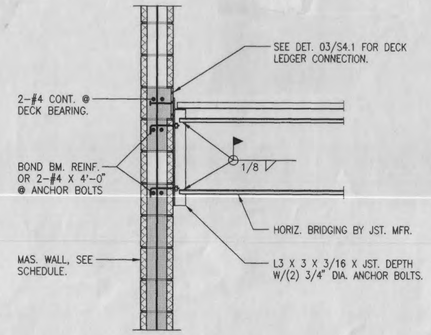

DETAIL 05

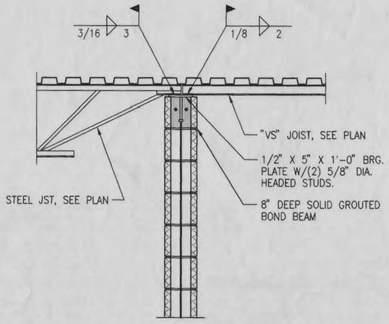

DETAIL 06

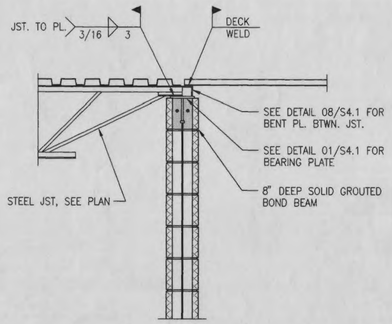

DETAIL 07

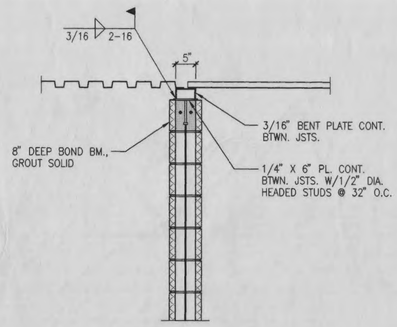

DETAIL 08

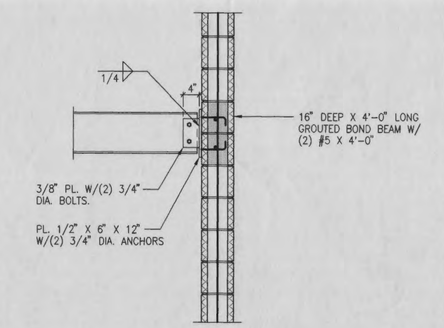

DETAIL 09

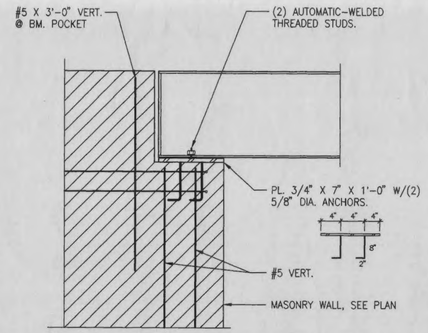

DETAIL 10

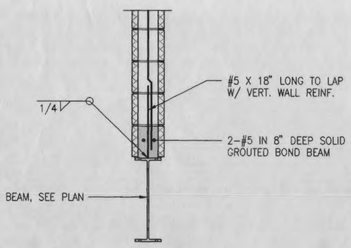

DETAIL 11

DETAIL 12

DETAIL 13

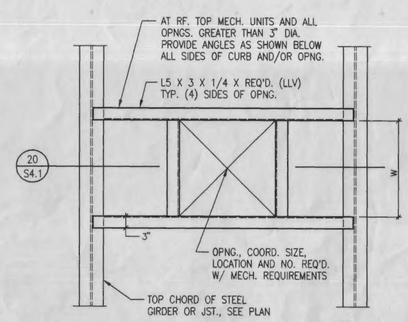

DETAIL 14

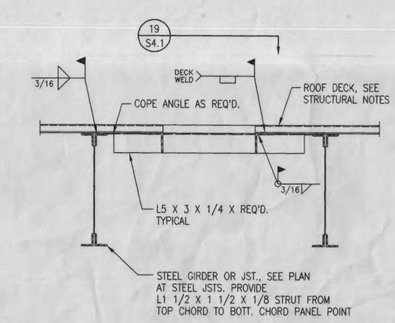

DETAIL 15

DETAIL 16

DETAIL 17

DETAIL 18

DETAIL 19

DETAIL 20

REFERENCE NOTES

GENERAL NOTES

LEGEND

AIR NATIONAL GUARD — CIVIL ENGINEERING

UTAH AIR NATIONAL GUARD BASE

765 NORTH 2200 WEST
SALT LAKE CITY, UTAH
84116-2869

STRUCTURAL DETAILS

CALDER-KANKAINEN
CONSULTING ENGINEERS, INC.
307 West 200 So. Ste. 4002
Salt Lake City, Utah 84101
Telephone: (801) 328-2726

No. 260558 — KURT A. SMALL — STATE OF UTAH

ELECTRONIC SECURITY SQUADRON FACILITY – UTAH AIR NATIONAL GUARD
PROJ. NO. USEB 939661

FFKR Architects Planners
132 Pierpont Ave. Suite 200
Salt Lake City, Utah 84101
Telephone 801 521-6186

DATE: APRIL 1, 1999
REVISED:
DRAWN BY: B.J.B.

DRAWING NO: S-4.1

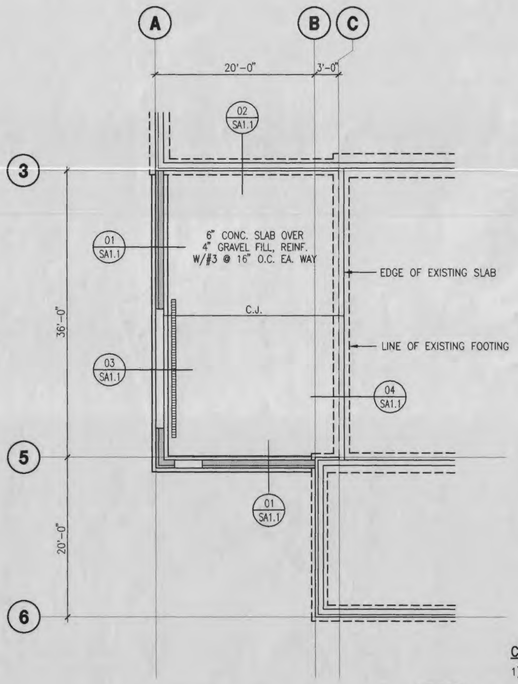

FOOTING AND FOUNDATION PLAN

SCALE: 1/8" = 1'-0"

ABI #1 NOTE 1.

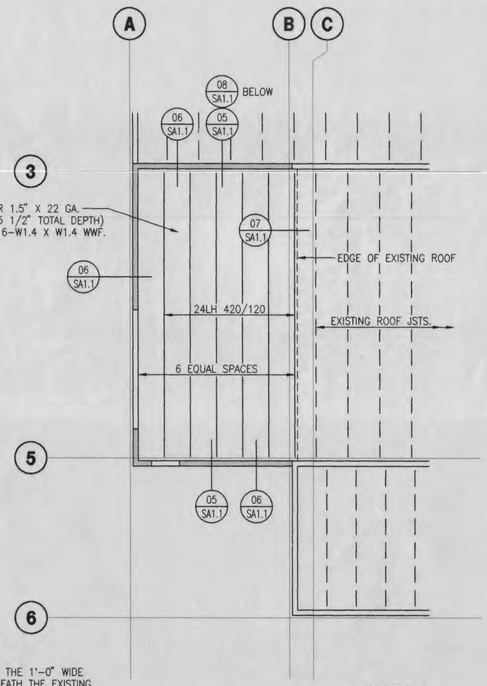

ROOF FRAMING PLAN

SCALE: 1/8" = 1'-0"

ABI #1 NOTE 1.

CONSTRUCTION SEQUENCE:

1) PLACE ALL CONCRETE FOOTINGS EXCEPT THE 1'-0" WIDE ADDITION TO THE EXISTING FOOTING BENEATH THE EXISTING CONCRETE SLAB ALONG EAST WALL.
2) PLACE NEW CONCRETE WALLS, ROOF JSTS, AND CONCRETE OVER STEEL ROOF DECK.
3) INSTALL ALL EXTERIOR DOORS AND RELATED HARDWARE.
4) AFTER ALL CONCRETE WALLS AND SLABS HAVE REACHED DESIGN STRENGTH: REMOVE EXISTING CONCRETE SLAB AS SHOWN IN DETAIL 02 AND INSTALL FOOTING EXTENSION.
5) REPLACE CONCRETE SLAB AND REINFORCING TO MATCH ORIGINAL.

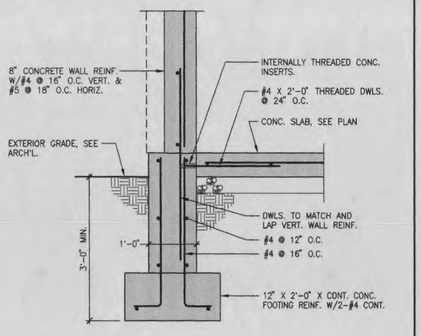

DETAIL 01

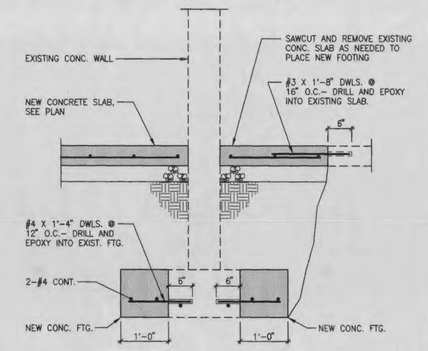

DETAIL 02

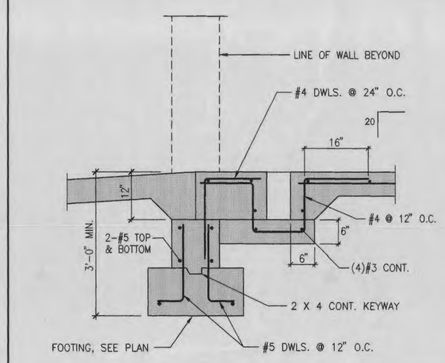

DETAIL 03

STRUCTURAL NOTES

GENERAL

ALL DESIGN, CONSTRUCTION, AND INSPECTION SHALL BE IN CONFORMANCE WITH THE LATEST EDITION OF THE UNIFORM BUILDING CODE (1994).

THE CONTRACTOR SHALL VERIFY ALL DIMENSIONS AND CONDITIONS AT THE SITE.

ALL OMISSIONS OR CONFLICTS BETWEEN THE VARIOUS ELEMENTS OF THE WORKING DRAWINGS AND/OR SPECIFICATIONS SHALL BE BROUGHT TO THE ATTENTION OF THE CONTRACTING OFFICER BEFORE PROCEEDING WITH ANY WORK INVOLVED.

CONTRACTOR SHALL BE RESPONSIBLE FOR SAFETY AND PROTECTION WITHIN AND ADJACENT TO THE JOB SITE.

TEMPORARY BRACING SHALL BE PROVIDED WHEREVER NECESSARY TO TAKE CARE OF ALL LOADS TO WHICH THE STRUCTURE MAY BE SUBJECTED INCLUDING WIND. SUCH BRACING SHALL BE LEFT IN PLACE AS LONG AS MAY BE REQUIRED FOR SAFETY OR UNTIL ALL THE STRUCTURAL ELEMENTS ARE COMPLETE.

DURING AND AFTER CONSTRUCTION THE CONTRACTOR AND/OR OWNER SHALL KEEP LOADS ON THE STRUCTURE WITHIN THE LIMITS OF THE DESIGN LOADS.

THE GENERAL CONTRACTOR SHALL HAVE SHOP DRAWINGS REVIEWED BY THE CONTRACTING OFFICER PRIOR TO THE FABRICATION OR ERECTION FOR THE FOLLOWING ITEMS: REINFORCING STEEL, STRUCTURAL STEEL, MISCELLANEOUS METALS, PREFABRICATED STEEL JOISTS.

ALL DETAILS, SECTIONS, AND NOTES ARE INTENDED TO BE TYPICAL AND SHALL APPLY TO SIMILAR SITUATIONS UNLESS NOTED OR SHOWN OTHERWISE.

REFER TO THE SPECIFICATIONS FOR ADDITIONAL INFORMATION NOT COVERED ON THE DRAWINGS.

SIZES, LOCATIONS, AND ANCHORAGES OF EQUIPMENT SHALL BE VERIFIED IN THE FIELD WITH EQUIPMENT MANUFACTURERS (SUPPLIERS) PRIOR TO PLACING CONCRETE OR FABRICATING STEEL.

FOOTINGS

ALL FOOTINGS SHALL BEAR 12" MINIMUM INTO ORIGINAL UNDISTURBED EARTH OR ON ENGINEERED FILL COMPACTED TO 95% OF MAXIMUM RELATIVE DENSITY BASED ON ASTM D1557-91. SUCH FILL SHALL BE PLACED IN LAYERS NOT TO EXCEED 6" IN DEPTH AFTER COMPACTION AND SHALL EXTEND DOWN ~~TO IN-SITU GRANULAR SOILS~~ 2'-0" BELOW FOOTING, AND 2'-0" WIDER THAN FOOTING.
EXTERIOR WALL FOOTINGS SHALL BEAR AT A MINIMUM DEPTH OF 3'-0" BELOW FINISHED EXTERIOR GRADE.

NO FOOTINGS SHALL BE PLACED IN WATER OR ON FROZEN GROUND.

ANY SOIL CONDITION ENCOUNTERED DURING EXCAVATION THAT IS CONTRARY TO THE CONDITIONS USED FOR DESIGN OF FOOTINGS AS OUTLINED IN THE SOILS REPORT BY AGRA EARTH & ENVIRONMENTAL (DATED 11/4/94), OR ON THE DRAWINGS SHALL BE BROUGHT TO THE ATTENTION OF THE CONTRACTING OFFICER BEFORE PROCEEDING.

CONCRETE

CONCRETE SHALL ATTAIN THE FOLLOWING MINIMUM COMPRESSIVE STRENGTHS AT 28 DAYS:
FOOTINGS & FOUNDATION WALLS.....3000 PSI
INTERIOR SLABS ON GRADE.....3500 PSI
SUSPENDED SLABS.....4000 PSI
EXTERIOR FLAT WORK.....4000 PSI

A STATEMENT OF MIX DESIGN FOR ALL CONCRETE SHALL BE SUBMITTED TO AND REVIEWED BY THE CONTRACTING OFFICER PRIOR TO COMMENCING WORK. ALL CONCRETE SHALL BE TYPE III HIGH EARLY STRENGTH.

ALL CONCRETE WORK SHALL BE PLACED, CURED, STRIPPED, AND PROTECTED AS DIRECTED BY THE SPECIFICATIONS AND ACI STANDARDS AND PRACTICES.

UNLESS NOTED OTHERWISE ON THE DRAWINGS, REINFORCE CONCRETE WALLS AS FOLLOWS:
6" WALL #4 @ 15" HOR., #4 @ 18" VERT..IN CENTER OF WALL
8" WALL #5 @ 18" HOR., #4 @ 18" VERT..IN CENTER OF WALL
10" WALL #5 @ 15" HOR., #4 @ 16" VERT..IN CENTER OF WALL

DOWEL VERTICAL BARS 30 DIAMETERS INTO STRUCTURE ABOVE AND FOOTINGS BELOW. IN ADDITION, PROVIDE 2-#5 CONTINUOUS BARS TOP AND BOTTOM OF 6" AND 8" WALLS AND 2-#6 BARS TOP AND BOTTOM OF WALLS 10" OR THICKER.

BEFORE CONCRETE IS POURED CHECK WITH ALL TRADES TO ENSURE PROPER PLACEMENT OF ALL OPENINGS, SLEEVES, CURBS, CONDUITS, BOLTS, INSERTS, ETC. RELATIVE TO WORK.

ADD 2-#5 BARS AROUND ALL OPENINGS (UNLESS OTHERWISE NOTED) AND EXTEND 24" BEYOND CORNER OF OPENING.

REFER TO DRAWINGS FOR TYPICAL CONSTRUCTION JOINT DETAILS. UNLESS NOTED IN DRAWINGS, ALL REINFORCEMENT SHALL BE CONTINUOUS THRU JOINTS AND EACH CONSTRUCTION JOINT SHALL BE KEYED.

REINFORCING STEEL

ALL REINFORCEMENT SHALL BE DETAILED AND PLACED IN ACCORDANCE WITH ACI DETAILING MANUAL 315-80 AND ACI STANDARD 318-89.

REINFORCING STEEL SHALL BE ASTM A615 GRADE 60.

WELDED WIRE FABRIC SHALL CONFORM TO ASTM A185. LAP ONE MESH TIE.

ALL REINFORCEMENT SHALL BE SECURELY TIED AND HELD IN PLACE.

ALL CONTINUOUS REINFORCEMENT SHALL TERMINATE WITH A 90 DEG. TURN OR A SEPARATE CORNER BAR. ALL SPLICES SHALL LAP A MINIMUM OF 36 BAR DIAMETERS (12" MINIMUM).

COVER TO MAIN REINFORCEMENT FROM ADJACENT SURFACES SHALL BE AS FOLLOWS UNLESS SHOWN OTHERWISE:
A. UNFORMED SURFACES IN CONTACT WITH GROUND OR EXPOSED TO THE WEATHER (BOTTOM OF FOOTINGS). . . . . 3 INCHES
B. SLABS ON GRADE . . . . . 2 INCHES
C. FORMED SURFACES IN CONTACT WITH THE GROUND OR EXPOSED TO THE WEATHER (GRADE BMS, WALLS,ETC.). . . 2 INCHES
D. INTERIOR AND EXTERIOR STRUCTURAL SLABS . . . . . 1 INCH
E. INTERIOR WALL SURFACES . . . . . 1-1/2 IN.
F. IN ALL CASES MINIMUM COVER SHALL NOT BE LESS THAN THE DIAMETER OF ADJACENT BARS.

PRIOR TO FABRICATION AND PLACEMENT, SHOP DRAWINGS FOR ALL REINFORCING STEEL SHALL BE REVIEWED BY THE CONTRACTING OFFICER.

STRUCTURAL STEEL

ALL STRUCTURAL STEEL AND STRUCTURAL STEEL WORK SHALL COMPLY WITH BOTH THE AISC "MANUAL OF STEEL CONSTRUCTION" CONTAINING THE SPECIFICATIONS FOR THE DESIGN, FABRICATION AND ERECTION OF STRUCTURAL STEEL BUILDINGS, INCLUDING THE "CODE OF STANDARD PRACTICES" (LATEST EDITION), AND WITH THE UBC 1994 EDITION.

ALL STRUCTURAL STEEL SHALL BE ASTM A36, UNO.

USE A307 BOLTS FOR ALL CONNECTIONS.

PRIOR TO FABRICATION AND ERECTION, SHOP DRAWINGS FOR ALL STEEL ITEMS SHALL BE REVIEWED BY THE CONTRACTING OFFICER.

ALL WELDS SHALL BE MADE WITH E70XX ELECTRODES AND BY WELDERS CERTIFIED BY AWS STANDARDS WITHIN THE PAST 12 MONTHS; PROVIDE WRITTEN CERTIFICATION IF REQUESTED.

ALL STEEL JOISTS, JOIST GIRDERS, AND ASSOCIATED WORK SHALL COMPLY WITH THE LATEST EDITION OF THE "STANDARD SPECIFICATIONS OF THE STEEL JOIST INSTITUTE."

CONCENTRATED LOADS SHALL NOT BE PLACED ON NOR HUNG FROM JOISTS UNLESS THEY ARE PLACED AT PANEL POINTS OR A BRACE (L1-1/2x1-1/2X1/8) IS INSTALLED BETWEEN THE LOAD AND PANEL POINT. CONCENTRATED LOADS NOT SHOWN ON THE DRAWINGS SHALL BE BROUGHT TO THE ATTENTION OF THE CONTRACTING OFFICER FOR REVIEW.

METAL ROOF DECK

STEEL ROOF DECK SHALL COMPLY WITH THE LATEST REQUIREMENTS OF THE STEEL DECK INSTITUTE, SDI. SUBMIT ICBO REPORT WITH SHOP DRAWINGS.

STEEL ROOF DECK SHALL BE 1.5" DEEP X 22 GAUGE PAINTED, TYPE "B" WIDE RIB DECK WITH INTERLOCKING SIDE SEAMS. THE FOLLOWING MINIMUM PROPERTIES MUST BE SATISFIED:
Fy = 38 KSI
I = .175 IN 4/FT.
Sp = .187 IN 3/FT.
Sn = .198 IN 3/FT.

WELD STEEL ROOF DECK TO SUPPORTING FRAMING MEMBERS WITH 3/4" DIAMETER PUDDLE WELDS AT THE FOLLOWING SPACINGS:
(7) WELDS PER 36-INCH SHEET TO ALL SUPPORTS PERPENDICULAR TO DECK CORRUGATIONS.
12" O.C. TO ALL SUPPORTS PARALLEL TO DECK CORRUGATIONS.

ATTACH INTERLOCKING SEAMS WITH BUTTON PUNCHES AT 24" O.C. MAXIMUM BETWEEN ADJACENT PIECES OF DECKING.

PROVIDE A 2" MINIMUM BEARING AND A 2-INCH LAP AT THE SPLICE POINTS OF ALL PIECES OF DECK.

WHERE POSSIBLE, ALL DECK SHALL BE 3-SPAN CONTINUOUS MINIMUM. IN AREAS WHERE 3-SPAN CONDITIONS ARE NOT POSSIBLE, THE DECK SHALL MEET THE LOADING CRITERIA FOR THE SPAN CONDITION. THE CONTRACTOR SHALL PROVIDE HEAVIER GAUGE DECK AS REQUIRED FOR ONE OR TWO SPAN CONDITIONS.

STRUCTURAL DESIGN LOADS

SEISMIC: ZONE III Z = .30 C = 2.75
I = 1.0 Rw = 6.0

WIND: BASIC WIND SPEED = 70 MPH, qs = 12.6, EXPOSURE "C".

SOILS: NET ALLOWABLE SOIL PRESSURE = 2500 PSF, PER SOIL REPORT BY AGRA EARTH & ENVIRONMENTAL DATED 11/4/94

ROOF: DL = 75 PSF LL = 30 PSF

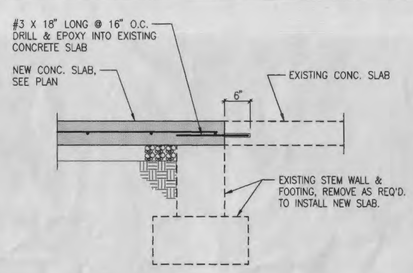

DETAIL 04

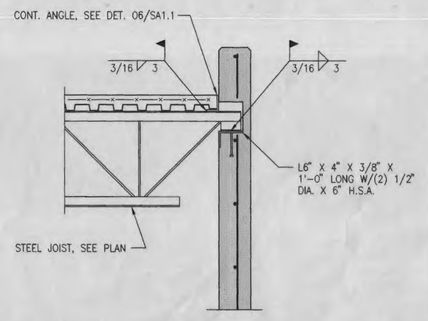

DETAIL 05

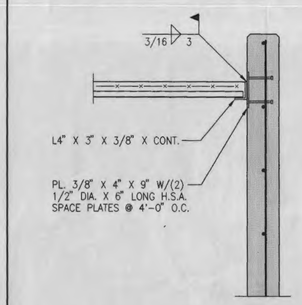

DETAIL 06

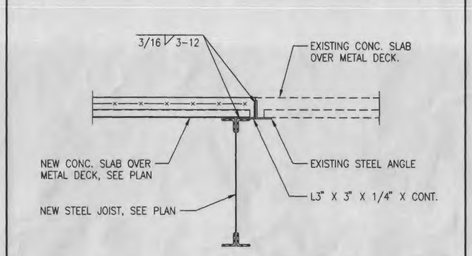

DETAIL 07

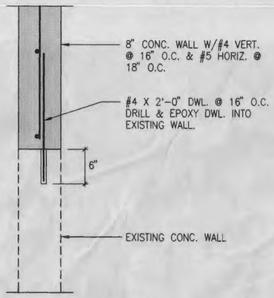

DETAIL 08

REFERENCE NOTES

1. ELIMINATE ALL WORK ON THIS SHEET UNLESS ABI #1 IS SELECTED.

GENERAL NOTES

LEGEND

AIR NATIONAL GUARD CIVIL ENGINEERING

UTAH AIR NATIONAL GUARD BASE

765 NORTH 2200 WEST
SALT LAKE CITY, UTAH
84116-2999

STRUCTURAL PLANS/DETAILS

CALDER-KANKAINEN
CONSULTING ENGINEERS, INC.
307 West 200 So. Ste. 4002
Salt Lake City, Utah 84101
Telephone: (801) 328-2726

No. 260558 KURT A. SMALL REGISTERED STRUCTURAL ENGINEER 11-3-95 STATE OF UTAH

ELECTRONIC SECURITY SQUADRON FACILITY - UTAH AIR NATIONAL GUARD
PROJ. NO. USEB 939661

FFKR Architects Planners //
132 Pierpont Ave. Suite 200
Salt Lake City, Utah 84101
Telephone 801 521-6186

DATE: APRIL 1996 ~~10-3-1995~~
REVISED:
DRAWN BY: B.J.B.

DRAWING NO: **SA-1.1**