DOOR SCHEDULE

LOCATION			DOOR SCHEDULE									FRAME SCHEDULE			HARDWARE SCHEDULE								SECURITY DOOR MATRIX									SIGN			
LEVEL/FLOOR	DOOR #	DOOR LOCATION	REMOVE EXIST AND INSTALL NEW DOOR AND FRAME	INSTALL NEW DOOR	NEW HARDWARE ONLY	WIDTH	HEIGHT	THICK.	MATERIAL	FINISH	TYPE	TYPE	MATERIAL	FINISH	PAIR HINGES TOTAL	DOOR CLOSER	WEATHER STRIP	LOCK SET TYPE	EXT. RATED	FIRE RATED			ELECTRONIC CARD READER	MAGNETIC CONTACT	ELECTRONIC STRIKE	GRADE-1 BEST CORE	LATCH GUARD	ASTRAGAL	PERIMETER SEAL	RAIN DRIP	SWEEP	EMERGENCY EXIT SIGN	NOT AN EXIT SIGN	EXIT SIGN	FAA WARNING SIGN
GROUND	B-4	STAIRS			●	-	-	-	-	-	-	-	-	-	-	●	-	P	-	-			-	-	-	YES	-	-	-	-	-	-	-	-	-
SECOND	C-2	CABLE CHASE	●			3'-0"	7'-0"	1 3/4"	STL	PAINT	(A)	⟨1⟩	STL	PAINT	1.5	●	●	D	●	90			-	-	-	YES	YES	-	●	●	●	-	-	-	-
	C-3	CABLE CHASE	●			3'-0"	7'-0"	1 3/4"	STL	PAINT	(A)	⟨1⟩	STL	PAINT	1.5	●	●	D	●	90			-	-	-	YES	YES	-	●	●	●	-	-	-	-
	C-4	STAIRS	●			3'-0"	7'-0"	1 3/4"	STL	PAINT	(A)	⟨1⟩	STL	PAINT	1.5	●	●	P	●	90			-	-	-	YES	YES	-	●	●	●	-	-	-	-
SUBJUNCTION	SJ1-2	CABLE CHASE			●	-	-	-	-	-	-	-	-	-	-	●	-	D	-	-			-	-	-	YES	-	-	-	-	-	-	-	-	-
JUNCTION	J-1	ELEVATOR MACHINE			●	-	-	-	-	-	-	-	-	-	-	●	-	D	-	-			-	-	-	YES	-	-	-	-	-	-	-	-	-

DOOR HARDWARE DESCRIPTION

DESG.	FUNCTION	DESCRIPTION	OUTSIDE LEVER		INSIDE LEVER	
			LOCKED BY	UNLOCKED BY	LOCKED BY	UNLOCKED BY
● P	PASSAGE	TURNING THE INSIDE LEVER, OR ROTATING THE OUTSIDE LEVER	CANNOT BE LOCKED	ALWAYS UNLOCKED	CANNOT BE LOCKED	ALWAYS UNLOCKED
● D	STOREROOM	TURNING THE KEY IN THE OUTSIDE LEVER, OR ROTATING THE INSIDE LEVER	ALWAYS FIXED	CANNOT BE UNLOCKED	CANNOT BE LOCKED	ALWAYS UNLOCKED

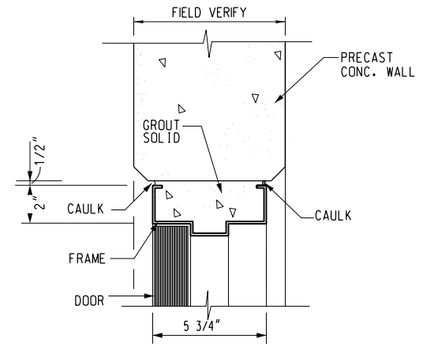

1 A505 DOOR HEAD
SCALE: 3" = 1'-0"

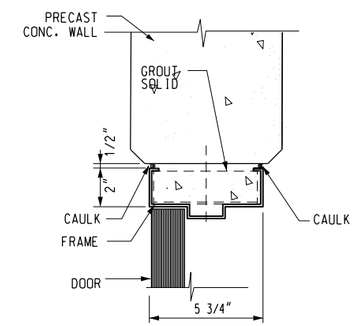

2 A505 JAMB DET.
SCALE: 3" = 1'-0"

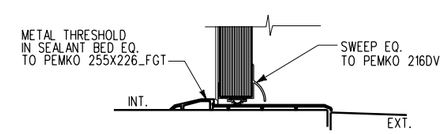

3 A505 EXTERIOR THRESHOLD
SCALE: 3" = 1'-0"

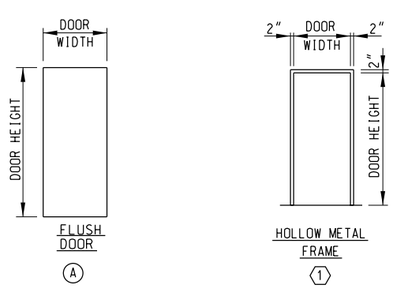

1 A505 DOOR AND FRAME TYPE
NOT TO SCALE

12" 9" 6" 3" 0
3"=1'-0"

SCALES SHOWN FOR 22" X 34" SHEET. ADJUST SCALES FOR OTHER SIZES.

PAGE OF

REV	APPROVED DATE	DESCRIPTION	JCN	REDLINE DATE	APVD
1	08/05/2020	ISSUE FOR CONSTRUCTION			

DEPARTMENT OF TRANSPORTATION
FEDERAL AVIATION ADMINISTRATION

FORT LAUDERDALE AIRPORT TRAFFIC CONTROL TOWER
MAJOR IMPROVEMENTS
ARCHITECTURAL
DOOR TYPES, SCHEDULE AND DETAILS

FT LAUDERDALE (INTERNATIONAL) FL

Wiley|Wilson
5901 Peachtree Dunwoody Rd.
Bldg. C, Ste 515
Atlanta, Georgia 30328-6055
678.320.1888
wileywilson.com

WW JOB NUMBER: 219075.00

REVIEWED BY | SUBMITTED BY | APPROVED BY

SUBMITTER'S TITLE - CIVIL ENGINEER | APPROVER'S TITLE - MANAGER

DESIGNED GMR | DRAWN GMR | CHECKED NXE | ISSUED BY ATLANTA TERMINAL ENGINEERING CENTER | DATE JAN. 31, 2020 | JCN 1508912

DRAWING NO. 1 FLL-D-ATCT- A505 REV 1