DOOR SCHEDULE

LOCATION		DOOR SCHEDULE									FRAME SCHEDULE			HARDWARE SCHEDULE								SECURITY DOOR MATRIX									SIGN				COMMENTS
DOOR # BASE BUILDING	DOOR LOCATION AND NUMBER	REMOVE EXIST AND INSTALL NEW DOOR AND FRAME	INSTALL NEW DOOR	NEW HARDWARE ONLY	WIDTH	HEIGHT	THICK.	MATERIAL	FINISH	TYPE	TYPE	MATERIAL	FINISH	PAIR HINGES TOTAL	DOOR CLOSER	WEATHER STRIP	LOCK SET TYPE	EXT. RATED	FIRE RATED			ELECTRONIC CARD READER	MAGNETIC CONTACT	ELECTRONIC STRIKE	GRADE-1 BEST CORE	LATCH GUARD	ASTRAGAL	PERIMETER SEAL	RAIN DRIP	SWEEP	EMERGENCY EXIT SIGN	NOT AN EXIT SIGN	EXIT SIGN	FAA WARNING SIGN	
128	WOMEN'S ROOM		●		3'-0"	7'-0"	1 3/4"	STL	PAINT	(A)	⟨1⟩	STL	PAINT	1.5	●	-	L		45			-	-	-	●	-	-	-	-	-	-	-	-	-	
128A	ACCESSIBLE ROOM		●		3'-0"	7'-0"	1 3/4"	STL	PAINT	(A)	⟨1⟩	STL	PAINT	1.5	●	-	L		45			-	-	-	●	-	-	-	-	-	-	-	-	-	
127	MEN'S ROOM	●			3'-0"	7'-0"	1 3/4"	STL	PAINT	(A)	⟨1⟩	STL	PAINT	1.5	●	-	P		45			-	-	-	●	-	-	-	-	-	-	-	-	-	
120	STORAGE ROOM			●	-	-	-	-	-	-	-	-	-	-	●	-	D		-			-	-	-	●	-	-	-	-	-	-	-	-	-	
E/G BULDING																																			
EG02A	E/G BUILDING	●			3'-0"	7'-0"	1 3/4"	STL	PAINT	(A)	⟨1⟩	STL	PAINT	1.5	●	-	D		90			-	-	-	●	-	-	-	-	-	-	-	-	-	REFER TRACO-F102 FOR DOOR LOCATION
EG02B	E/G BUILDING	●			3'-0"	7'-0"	1 3/4"	STL	PAINT	(A)	⟨1⟩	STL	PAINT	1.5	●	-	D		90			-	-	-	●	-	-	-	-	-	-	-	-	-	REFER TRACO-F102 FOR DOOR LOCATION

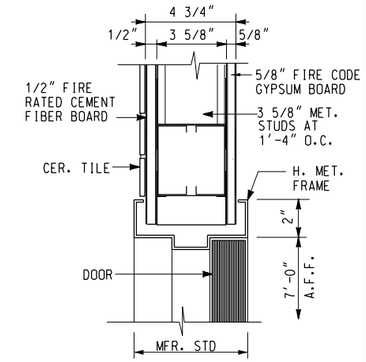

2 A505 DOOR HEAD
SCALE: 3" = 1'-0"

DOOR HARDWARE DESCRIPTION

DESG.	FUNCTION	DESCRIPTION	OUTSIDE LEVER		INSIDE LEVER	
			LOCKED BY	UNLOCKED BY	LOCKED BY	UNLOCKED BY
● P	PASSAGE	TURNING THE INSIDE LEVER, OR ROTATING THE OUTSIDE LEVER	CANNOT BE LOCKED	ALWAYS UNLOCKED	CANNOT BE LOCKED	ALWAYS UNLOCKED
● L	PRIVACY	ROTATING THE INSIDE LEVER, OR ROTATING THE OUTSIDE LEVER ONLY WHEN THE INSIDE PUSH BUTTON IS OUT	PUSHING THE INSIDE BUTTON	ROTATING THE OUTSIDE SLOTTED BUTTON, OR ROTATING INSIDE LEVER, OR CLOSING THE DOOR	CANNOT BE LOCKED	ALWAYS UNLOCKED
● D	STOREROOM	TURNING THE KEY IN THE OUTSIDE LEVER, OR ROTATING THE INSIDE LEVER	ALWAYS FIXED	CANNOT BE UNLOCKED	CANNOT BE LOCKED	ALWAYS UNLOCKED

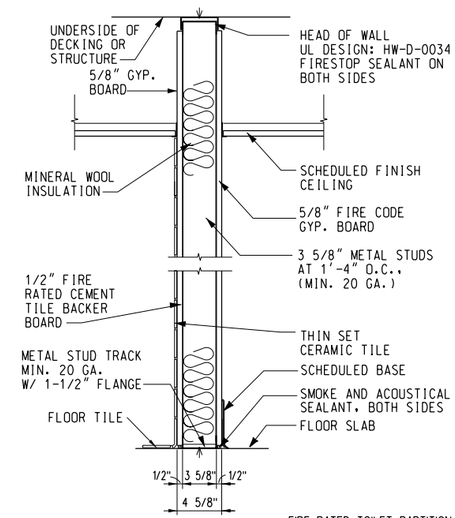

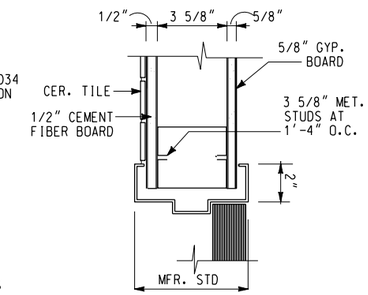

3 A505 JAMB DET.
SCALE: 3" = 1'-0"

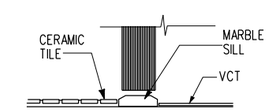

4 A505 SILL DETAIL
SCALE: 3" = 1'-0"

PLAN KEY	TYPICAL PARTITION	FIRE RATED TOILET PARTITION SCALE: NONE
R1	FIRE RATING: 1 HOUR	DESIGN: UL U433
	STC RATING: 42	TEST NO.: ---

NOTE: WALL TO BE SEALED (TOP AND BOTTOM) WITH FIRE RATED SEALANT TO PROVIDE A 1HR RATED SEPARATION.

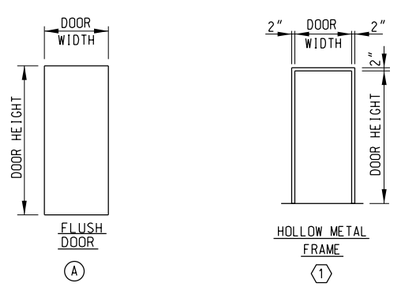

1 A505 DOOR AND FRAME TYPE
NOT TO SCALE

12" 9" 6" 3" 0
3"=1'-0"

SCALES SHOWN FOR 22" X 34" SHEET. ADJUST SCALES FOR OTHER SIZES. PAGE OF

REV	APPROVED DATE	DESCRIPTION	JCN	REDLINE DATE	APVD
1	08/05/2020	ISSUE FOR CONSTRUCTION			

DEPARTMENT OF TRANSPORTATION
FEDERAL AVIATION ADMINISTRATION

FORT LAUDERDALE AIRPORT TRAFFIC CONTROL TOWER
MAJOR IMPROVEMENTS
ARCHITECTURAL
DOOR TYPES, SCHEDULE AND DETAILS

FT LAUDERDALE (INTERNATIONAL) FL

Wiley|Wilson
5901 Peachtree Dunwoody Rd.
Bldg. C, Ste 515
Atlanta, Georgia 30328-6055
678.320.1888
wileywilson.com

WW JOB NUMBER: 219075.00

REVIEWED BY | SUBMITTED BY | APPROVED BY
SUBMITTER'S TITLE - CIVIL ENGINEER | APPROVER'S TITLE - MANAGER
DESIGNED GMR | DRAWN GMR | CHECKED NXE | ISSUED BY ATLANTA TERMINAL ENGINEERING CENTER | DATE JAN 31, 2020 | JCN 1508912
DRAWING NO FLL-D-TRACO-A505 | REV