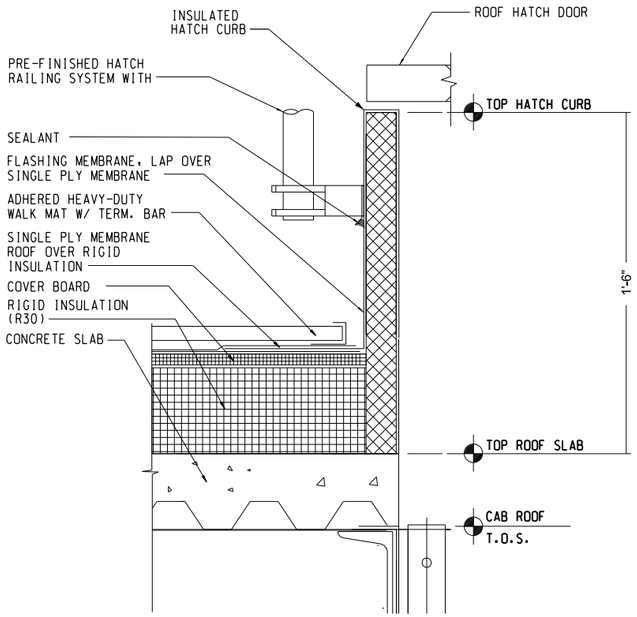

1 A611 ROOF HATCH CURB DETAILS

NOT TO SCALE

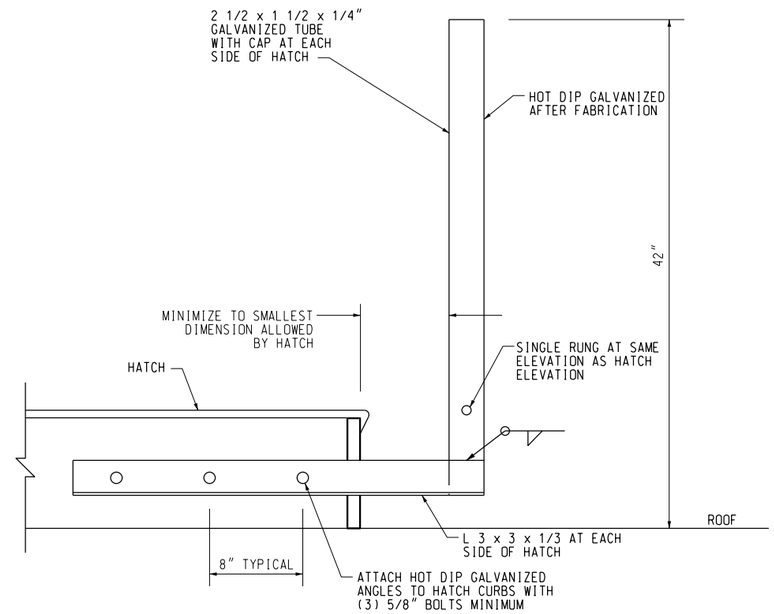

2 A611 GRAB BARS ATTACHED TO HATCH FRAME

NOT TO SCALE

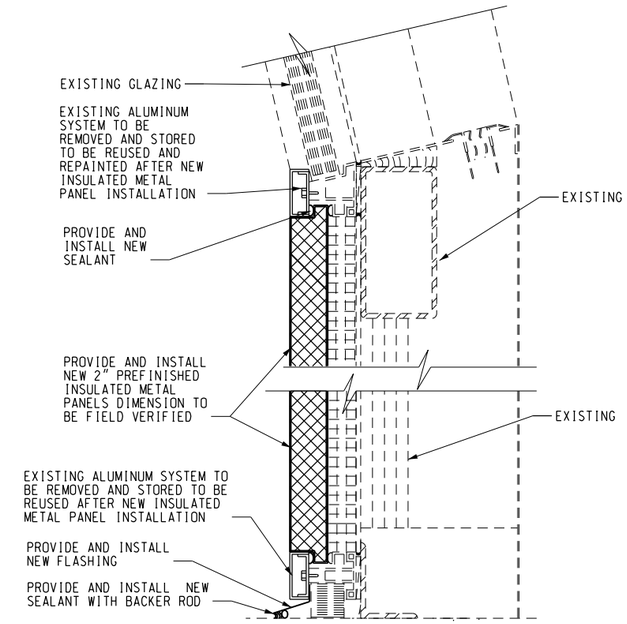

1 4 A611 METAL PANEL DETAIL

SCALE: 3" = 1' - 0"

INSULATED METAL PANEL NOTES

1. CONTRACTOR SHALL COORDINATE WITH FAA COR IF EXISTING CONDITIONS ARE NOT DEPICTED IN DRAWINGS.
2. INSULATED METAL PANEL DETAIL SHOWN IS DIAGRAMMATIC ONLY. THE INTENT OF THIS DRAWING IS FOR THE CONTRACTOR TO PROVIDE A COMPLETE INSULATED METAL PANEL SYSTEM, INCLUDING FULLY ENGINEERED CONNECTIONS AND ATTACHMENT FURNISHED BY A SINGLE SUB-CONTRACTOR, AS PER THE REQUIREMENTS OF THE SPECIFICATIONS.
3. PROVIDE INSULATED METAL PANELS (R-20 MIN.), EQUAL TO CENTRIA, DESIGNED TO COMPLY WITH THE HIGH VELOCITY HURRICANE ZONE OF THE FLORIDA BUILDING CODE. PROVIDE EVIDENCE OF PRODUCT CURRENT OF MIAMI-DADE COUNTY BUILDING CODE COMPLIANCE OFFICE.

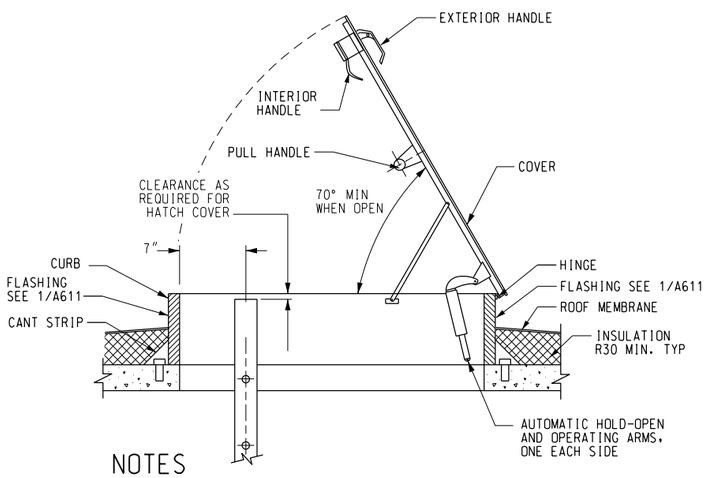

NOTES

1. HATCH WIDTH 24" MIN FROM FACE - FACE OF OPERATING ARMS.
2. GRAB BAR NOT SHOWN FOR CLARITY.

3 A611 COUNTERBALANCED HATCH COVER AT ROOF

NOT TO SCALE

12" 9" 6" 3" 0

3"=1'-0"

SCALES SHOWN FOR 22" X 34" SHEET. ADJUST SCALES FOR OTHER SIZES. PAGE OF

REV	APPROVED DATE	DESCRIPTION	JCN	REDLINE DATE	APVD
1	08/05/2020	ISSUE FOR CONSTRUCTION			

DEPARTMENT OF TRANSPORTATION
FEDERAL AVIATION ADMINISTRATION

FORT LAUDERDALE AIRPORT TRAFFIC CONTROL TOWER
MAJOR IMPROVEMENTS
ARCHITECTURE
CATWALK HATCH AND CAB DETAILS

FT LAUDERDALE (INTERNATIONAL) FL

Wiley|Wilson
5901 Peachtree Dunwoody Rd.
Bldg. C, Ste 515
Atlanta, Georgia 30328-6055
678.320.1888
wileywilson.com

WW JOB NUMBER: 219075.00

REVIEWED BY | SUBMITTED BY | APPROVED BY

SUBMITTER'S TITLE - CIVIL ENGINEER | APPROVER'S TITLE - MANAGER

DESIGNED GMR | DRAWN GMR | CHECKED NXE | ISSUED BY ATLANTA TERMINAL ENGINEERING CENTER | DATE JAN 31, 2020 | JCN 1508912 | DRAWING NO FLL-D-ATCT-A611 | REV 1