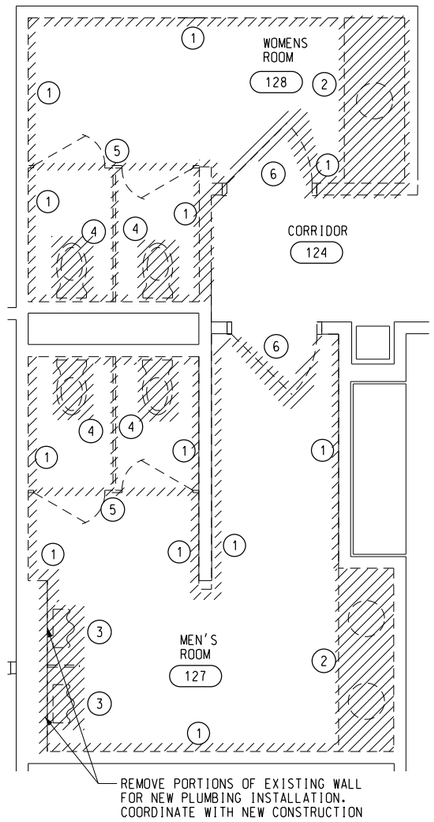

1 A400 RESTROOM DEMO PLAN
SCALE: 3/8" = 1' - 0"

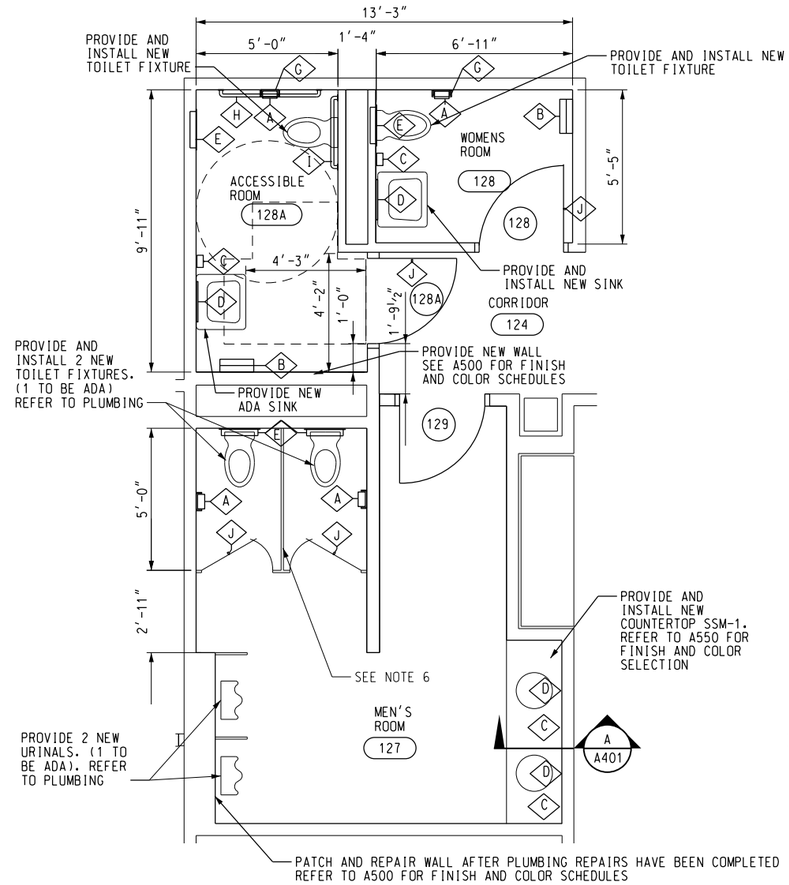

2 A400 RESTROOM NEW WORK PLAN
SCALE: 3/8" = 1' - 0 "

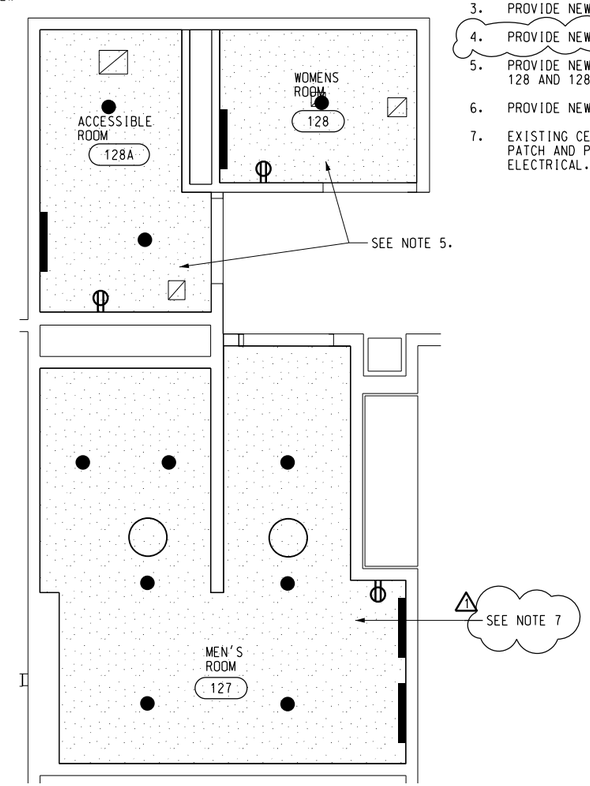

3 A400 RESTROOM NEW RCP
SCALE: 3/8" = 1' - 0 "

NOTES

1. PROVIDE NEW BATHROOM FIXTURES. REFER TO PLUMBING DRAWINGS.
2. PROVIDE NEW ACCESSORIES, REFER TO TOILET ACCESSORIES SCHEDULE.
3. PROVIDE NEW FLOOR AND WALL CERAMIC TILE. REFER TO FINISH SCHEDULE.
4. PROVIDE NEW DOORS. REFER TO DOOR SCHEDULE.
5. PROVIDE NEW GYPSUM BOARD CEILING AND CEILING FIXTURES IN ROOMS 128 AND 128A.
6. PROVIDE NEW TOILET PARTITIONS. REFER TO A500 FOR MORE INFORMATION.
7. EXISTING CEILING TO REMAIN, EXISTING LIGHT FIXTURES TO BE REMOVED. PATCH AND PAINT CEILING, INSTALL NEW LIGHT FIXTURES, REFER TO ELECTRICAL.

DEMOLITION KEYNOTES

1. REMOVE EXISTING CERAMIC TILE
2. REMOVE EXISTING LAVATORY AND COUNTER TOP
3. REMOVE EXISTING URINALS
4. REMOVE EXISTING WATERCLOSETS
5. REMOVE EXISTING TOILET PARTITIONS
6. REMOVE EXISTING DOOR

TOILET ACCESSORIES SCHEDULE

KEY	DESCRIPTION	EQUAL TO	MOUNTING TYPE
A	TOILET TISSUE DISPENSER	BOBRICK B-686	SURFACE MOUNTED
B	PAPER TOWEL DISPENSER AND WASTE RECEPTACLE	BOBRICK B-3699	SURFACE MOUNTED
C	SOAP DISPENSER	BOBRICK B-2111	SURFACE MOUNTED
D	MIRROR 18" X 30"	BOBRICK B-165 1830	SURFACE MOUNTED
E	SEAT COVER DISPENSER	BOBRICK B-301	RECESSED MOUNTED
F	SANITARY NAPKIN VENDOR	BOBRICK B-2706	SURFACE MOUNTED
G	SANITARY NAPKIN DISPOSAL	BOBRICK B-254	SURFACE MOUNTED
H	GRAB BARS 1-1/2" X 42"	BOBRICK B-6806 SERIES	SURFACE MOUNTED
I	GRAB BARS 1-1/2" X 36"	BOBRICK B-6806 SERIES	SURFACE MOUNTED
J	COAT HOOK	BOBRICK B-212	SURFACE MOUNTED

N

2' 0 2' 4' 6'
3/8" = 1'-0"

SCALES SHOWN FOR 22" X 34" SHEET. ADJUST SCALES FOR OTHER SIZES. PAGE OF

REV	APPROVED DATE	DESCRIPTION	JCN	REDLINE DATE	APVD
1	08/05/2020	ISSUE FOR CONSTRUCTION			

DEPARTMENT OF TRANSPORTATION
FEDERAL AVIATION ADMINISTRATION

FORT LAUDERDALE AIRPORT TRAFFIC CONTROL TOWER
MAJOR IMPROVEMENTS
ARCHITECTURE
RESTROOM DEMOLITION AND NEW WORK

FT LAUDERDALE (INTERNATIONAL) FL

Wiley|Wilson
5901 Peachtree Dunwoody Rd.
Bldg. C, Ste 515
Atlanta, Georgia 30328-6055
678.320.1888
wileywilson.com

WW JOB NUMBER: 219075.00

REVIEWED BY | SUBMITTED BY | APPROVED BY
SUBMITTER'S TITLE - CIVIL ENGINEER | APPROVER'S TITLE - MANAGER
DESIGNED GMR | DRAWN GMR | CHECKED NXE
ISSUED BY ATLANTA TERMINAL ENGINEERING CENTER
DATE JAN 31, 2020 | JCN 1508912
DRAWING NO FLL-D-TRACO-A400 | REV 1