Department of Transportation
Federal Aviation Administration

Major Mechanical Modernization
Control Wing Basement and Chiller/Cooling Tower
Denver Air Route Traffic Control Center
Longmont, CO

[redacted]

100% Bid Submittal
July 2018

REV	APPROVED DATE	DESCRIPTION	JCN	REDLINE DATE	APVD

DEPARTMENT OF TRANSPORTATION
FEDERAL AVIATION ADMINISTRATION
ATO - TECHNICAL OPERATIONS WESTERN SERVICE AREA

ARTCC
MAJOR MECHANICAL MODERNIZATION

COVER SHEET

DENVER LONGMONT CO

REVIEWED BY

SUBMITTED BY: PAUL TULENKO — PROJECT ENGINEER

APPROVED BY: CALLEN R. COLLINS — MGR: ENGINEERING - SEATTLE

DO NOT SIGN

DESIGNED PT
DRAWN JA
CHECKED

ISSUED BY: ENGINEERING SERVICES ENROUTE/FSS

DATE
JCN 1401893
DRAWING NO ZDV-1401893-G001
REV

ISSUED FOR:

DRAWING PRODUCED ON WSA MICROSTATION SYSTEM

EDM: zdv-1401893-g001.dgn

zdv-1401893-g001.dgn
7/12/2018 10:36:30 AM John CTR Allen

INDEX OF DRAWINGS

DRAWING NUMBER	DRAWING TITLE
	GENERAL:
G001	COVER SHEET
G002	DRAWING INDEX, GENERAL NOTES, LOCATION MAP & BUILDING CODE ANALYSIS
G003	ABBREVIATIONS
G004	GENERAL/ARCHITECTURAL - LEGENDS
G005	CONSTRUCTION STAGING PLAN
	CIVIL:
C001	CIVIL SITE NORTH EXCAVATION PLAN
C002	COOLING TOWER FENCING ELEVATIONS AND DETAILS
C003	COOLING TOWER FENCING TYPICAL FENCE GROUNDING DETAILS
	ARCHITECTURAL:
A001	GUIDE PLAN - BASEMENT
A011	BASEMENT ROOM B112/B115/B116/B117/B118 HAZMAT ABATEMENT PLAN
A021	BASEMENT ROOM B81/B86/B101/B108/B120 HAZMAT ABATEMENT PLAN
A022	BASEMENT ROOM B119/B120A/B134 HAZMAT ABATEMENT PLAN
A101	BASEMENT ROOM B112/B115/B116/B118 DEMOLITION PLAN
A102	COOLING TOWER AND PUMP HOUSE DEMOLITION PLAN
A111	BASEMENT ROOM B81/B86/B88/B108/B120 DEMOLITION PLAN
A112	BASEMENT ROOM B119/B120A/B134 DEMOLITION PLAN
A113	NEOF MEZZANINE ROOM M88 DEMOLITION PLAN AND DEMOLITION RCP
A131	BASEMENT ROOM B81/B86/B88 REFLECTED CEILING DEMOLITION PLAN
A132	BASEMENT ROOM B119/B134 REFLECTED CEILING DEMOLITION PLAN
A201	BASEMENT ROOM B112/B115/B116/B118 FLOOR PLAN
A202	COOLING TOWER AND PUMP HOUSE FLOOR PLAN
A211	BASEMENT ROOM B88/B101/B108/B120 FLOOR PLAN
A212	BASEMENT ROOM B119/B120A/B134 FLOOR PLAN
A301	PUMP HOUSE EXTERIOR ELEVATIONS
A302	PUMP HOUSE SECTIONS AND DETAILS
A501	BASEMENT ROOM B115 REFLECTED CEILING PLAN
A502	COOLING TOWER AND PUMP HOUSE REFLECTED CEILING PLAN
A511	BASEMENT ROOM B88 REFLECTED CEILING PLAN
A512	BASEMENT ROOM B119/B134 REFLECTED CEILING PLAN
A601	STAIRS AND MISCELLANEOUS DETAILS
A602	SUSPENDED CEILING DETAILS
A701	BASEMENT ELEVATIONS & DETAILS
A801	DOOR AND FINISH SCHEDULES
	STRUCTURAL:
S101	PUMP HOUSE PREFAB METAL BUILDING SEISMIC RETROFIT
S102	PUMP HOUSE ADDITION FOUNDATION PLAN
S103	PUMP HOUSE ADDITION FOUNDATION SECTIONS AND DETAILS
S104	COOLING TOWER AND PUMP HOUSE PLATFORM PLAN AND DETAILS
	MECHANICAL:
M001	MECHANICAL ABBREVIATIONS, SYMBOLS AND GENERAL NOTES
M002	MECHANICAL ABBREVIATIONS, SYMBOLS AND CONSTRUCTION SEQUENCE
M101	BASEMENT CHILLER ROOM B115 HVAC EQUIPMENT AND PIPING PLAN - DEMOLITION
M102	BASEMENT CHILLER ROOM B115 HVAC EQUIPMENT AND PIPING PLAN - DEMOLITION
M103	BASEMENT CHILLER ROOM B115 HVAC EQUIPMENT AND PIPING PLAN - DEMOLITION
M104	COOLING TOWER AND PUMP HOUSE HVAC PIPING PLAN - DEMOLITION
M105	BASEMENT CHILLER ROOM B115 VENTILATION PLAN - DEMOLITION
M106	BASEMENT CHILLER ROOM B115 VENTILATION DETAILS - DEMOLITION
M111	BASEMENT ROOM B88/B101/B102/B120 HVAC EQUIPMENT AND PIPING PLAN - DEMOLITION
M112	BASEMENT ROOM B119 HVAC EQUIPMENT AND PIPING PLAN - DEMOLITION
M113	NEOF MEZZANINE HVAC PLAN - DEMOLITION
M201	BASEMENT CHILLER ROOM B115 HVAC EQUIPMENT AND PIPING PLAN
M202	BASEMENT CHILLER ROOM B115 HVAC EQUIPMENT AND PIPING PLAN
M203	BASEMENT CHILLER ROOM B115 HVAC EQUIPMENT AND PIPING PLAN
M204	COOLING TOWER AND PUMP HOUSE HVAC PIPING PLAN
M205	BASEMENT CHILLER ROOM B115 VENTILATION PLAN
M206	BASEMENT CHILLER ROOM B115 VENTILATION DETAILS
M211	BASEMENT ROOM B88/B101/B120/B129 HVAC EQUIPMENT AND PIPING PLAN
M212	BASEMENT ROOM B119 HVAC EQUIPMENT AND PIPING PLAN
M301	COOLING TOWER AND PUMP HOUSE PIPING SECTIONS AND DETAILS
M302	COOLING TOWER AND PUMP HOUSE COOLING TOWER SECTION
M303	CHILLER ROOM PIPING DETAILS
M304	FLAT PLATE HEAT EXCHANGER PIPING DETAILS
M501	HVAC TYPICAL DETAILS
M502	HVAC SEISMIC DETAILS
M511	HVAC SECTIONS AND TYPICAL DETAILS
M601	MECHANICAL EQUIPMENT SCHEDULES
M602	MECHANICAL EQUIPMENT SCHEDULES
M701	CHILLED WATER SYSTEM SCHEMATIC DIAGRAM - DEMOLITION
M702	CONDENSER WATER SYSTEM SCHEMATIC DIAGRAM - DEMOLITION
M703	COOLING TOWER WATER SYSTEM SCHEMATIC DIAGRAM - DEMOLITION
M711	CHILLED WATER SYSTEM SCHEMATIC DIAGRAM
M712	CONDENSER WATER SYSTEM SCHEMATIC DIAGRAM
M713	COOLING TOWER WATER SYSTEM SCHEMATIC DIAGRAM
M801	HVAC CONTROL DIAGRAMS
M802	DDCS POINT FUNCTION SCHEDULE
M811	HVAC CONTROL DIAGRAMS
M812	DDCS POINT FUNCTION SCHEDULE
	ELECTRICAL:
E001	ELECTRICAL ABBREVIATIONS, SYMBOLS AND GENERAL NOTES
E101	BASEMENT ROOM B115 LIGHTING PLAN - DEMOLITION
E102	COOLING TOWER AND PUMP HOUSE LIGHTING PLAN - DEMOLITION
E103	BASEMENT ROOM B115 POWER PLAN - DEMOLITION
E104	COOLING TOWER AND PUMP HOUSE POWER PLAN - DEMOLITION
E105	COOLING TOWER AND PUMP HOUSE LIGHTNING PROTECTION PLAN - DEMOLITION
E111	BASEMENT ROOM B88/B101/B102 LIGHTING PLAN - DEMOLITION
E112	BASEMENT ROOM B119/B134 LIGHTING PLAN - DEMOLITION
E113	BASEMENT ROOM B81/B88/B101/B120 POWER PLAN - DEMOLITION
E114	BASEMENT ROOM B119/B120A/B134 POWER PLAN - DEMOLITION
E115	NEOF MEZZANINE ROOM M88 DEMOLITION PLAN AND RCP DEMOLITION
E201	BASEMENT ROOM B115 LIGHTING PLAN
E202	COOLING TOWER AND PUMP HOUSE LIGHTING PLAN
E203	BASEMENT ROOM B115 POWER PLAN
E204	COOLING TOWER AND PUMP HOUSE POWER PLAN
E205	COOLING TOWER AND PUMP HOUSE LIGHTNING PROTECTION PLAN
E211	BASEMENT ROOM B88/B101/B102 LIGHTING PLAN
E212	BASEMENT ROOM B119/B134 LIGHTING PLAN
E213	BASEMENT ROOM B88/B120/B129 POWER PLAN
E214	BASEMENT ROOM B119/B134 POWER PLAN
E215	BASEMENT ROOM B134 GROUNDING PLAN
E301	COOLING TOWER AND PUMP HOUSE DISCONNECT SWITCH AND VFD ELEVATIONS - DEMOLITION
E302	COOLING TOWER AND PUMP HOUSE DISCONNECT SWITCH AND VFD ELEVATIONS
E303	COOLING TOWER AND PUMP HOUSE SINGLE LINE DIAGRAMS
E501	MCC-A/MCC-1A AND MCC-B/MCC-1B MOTOR CONTROL CENTER ELEVATIONS
E502	MCC-C/MCC-1C AND MCC-1D MOTOR CONTROL CENTER ELEVATIONS
E511	ELECTRICAL DETAILS
E512	ELECTRICAL DETAILS
E601	LIGHTING FIXTURE SCHEDULE
E701	MCC-A / MCC-1A SINGLE LINE DIAGRAM - DEMOLITION
E702	MCC-B / MCC-1B SINGLE LINE DIAGRAM - DEMOLITION
E703	MCC-C / MCC-1C SINGLE LINE DIAGRAM - DEMOLITION
E704	ESSENTIAL POWER / MCC-1D SINGLE LINE DIAGRAM - DEMOLITION
E705	PANELS HC-1/HC-2/HC-3/HC-4 & PUMP HOUSE SINGLE LINE DIAGRAM - DEMOLITION
E711	MCC-A / MCC-1A SINGLE LINE DIAGRAM - NEW WORK
E712	MCC-B / MCC-1B SINGLE LINE DIAGRAM - NEW WORK
E713	MCC-C / MCC-1C SINGLE LINE DIAGRAM - NEW WORK
E714	ESSENTIAL POWER / MCC-1D SINGLE LINE DIAGRAM - NEW WORK
E715	PANELS HC-1/HC-2/HC-3/HC-4 & PP-MOV SINGLE LINE DIAGRAM - NEW WORK
E801	COOLING TOWER AND PUMP HOUSE PANEL SCHEDULE AND DETAILS
E802	CHILLER ROOM PANEL SCHEDULE AND DETAILS
E811	CONTROL WING BASEMENT ROOM B88 PANEL SCHEDULE
	FIRE SUPPRESSION, DETECTION AND COMMUNICATIONS:
F001	FIRE SUPPRESSION ABBREVIATIONS, SYMBOLS AND GENERAL NOTES
F002	FIRE ALARM ABBREVIATIONS, SYMBOLS AND GENERAL NOTES
F111	BASEMENT ROOM B81/B86/B88 FIRE SUPPRESSION PLAN - DEMOLITION
F112	BASEMENT ROOM B119/B120A/B134 FIRE SUPPRESSION PLAN - DEMOLITION
F113	NEOF MEZZANINE ROOM M88 FIRE SUPPRESSION PLAN - DEMOLITION
F211	BASEMENT ROOM B88 FIRE SUPPRESSION PLAN
F212	BASEMENT ROOM B119/B120A/B134 FIRE SUPPRESSION PLAN
F311	BASEMENT ROOM B81/B86/B88/B120/B129 FIRE ALARM PLAN - DEMOLITION
F313	NEOF MEZZANINE ROOM M88 FIRE ALARM PLAN - DEMOLITION
F411	BASEMENT ROOM B88/B120/B129 FIRE ALARM PLAN
F412	BASEMENT ROOM B119/B120A/B134 FIRE ALARM PLAN

GENERAL NOTES

A. VERIFY DEMOLITION REQUIRED TO FACILITATE ROUTING OF MECHANICAL AND ELECTRICAL SYSTEMS. FOR DEMOLITION REQUIRED OUTSIDE OF AREA SHOWN ON ARCHITECTURAL DRAWINGS, REFER TO MECHANICAL & ELECTRICAL DRAWINGS.

B. REFER TO MECHANICAL AND ELECTRICAL DRAWINGS FOR EQUIPMENT TO BE REMOVED.

C. FINISHES AFFECTED BY THE WORK SHALL BE REPAIRED TO MATCH EXISTING FINISHES.

D. FIELD VERIFY EXISTING CONDITIONS & DIMENSIONS BEFORE DEMOLITION OF BUILDING SYSTEMS. COORDINATE DEMOLITION WITH NEW WORK AND NOTIFY COR OF CONFLICTS. NO DEMOLITION WORK SHALL PROCEED UNTIL CONFLICTS ARE RESOLVED TO SATISFACTION OF COR.

E. EXISTING FAA COMPUTER AND OTHER SENSITIVE EQUIPMENT SHALL REMAIN OPERATIONAL DURING CONSTRUCTION. COORDINATE WITH COR DEMOLITION WORK THAT MAY CAUSE VIBRATION OR DISRUPTION TO EQUIPMENT IN THE WORK AREA. PROVIDE DUST PROOF PARTITIONS AND BARRIERS AS REQUIRED TO PROTECT ACTIVE EQUIPMENT. PROVIDE ADDITIONAL LATERAL BRACING'S FOR ACCESS FLOOR SUPPORTS AFFECTED BY DEMOLITION WORK WHEN MORE THAN TWO PANELS ARE REMOVED.

F. FIRE AND SMOKE STOP OPENINGS IN FIRE RATED BARRIERS OR SLABS AND SMOKE BARRIERS THAT ARE EXISTING OR CAUSED BY REMOVAL OR PROVISION OF MECHANICAL, ELECTRICAL OR FIRE PROTECTION EQUIPMENT WITH AN APPROVED SYSTEM. REFER TO SPECIFICATION SECTION 07 84 13 FOR ADDITIONAL INFORMATION. REFER TO SHEET A001 FOR LOCATIONS OF FIRE RATED CONSTRUCTION.

G. PROVIDE TEMPORARY DUST PROOF PARTITIONS (DP) WITH ACCESS DOORS WHERE INDICATED ON DRAWINGS. TEMPORARY PARTITIONS SHALL BE ACCESSIBLE TO FAA PERSONNEL AND NOT RESTRICT ACCESS TO MECH, ELEC, FAA, OR FIRE PROTECTION EQUIPMENT. TEMPORARY DP ARE SHOWN SCHEMATICALLY ON DRAWINGS, VERIFY FINAL LOCATIONS & SPECIAL REQUIREMENTS WITH COR BEFORE INSTALLATION. ANCHORING DEVICES FOR DUSTPROOF CONSTRUCTIONS INTO CONCRETE SHALL BE REMOVED UPON COMPLETION OF WORK. ANCHORING HOLES IN CONCRETE SURFACES SHALL BE PATCHED.

H. PROVIDE OPENINGS THROUGH EXISTING WALLS AND PARTITIONS (GWB, MASONRY, AND CONCRETE) FOR PROVISION OF ARCHITECTURAL, MECHANICAL, ELECTRICAL & FIRE PROTECTION EQUIPMENT. COORDINATE SIZE & LOCATION WITH VARIOUS DISCIPLINES.

I. EXISTING ELECTRONIC EQUIPMENT ROOM (EAST) & HOST COMPUTER ROOM AREA WILL BE OCCUPIED BY FAA DURING CONSTRUCTION. CONTRACTOR SHALL COORDINATE WITH COR NOT TO DISRUPT FAA OPERATIONS. REFER TO SHEET G005 FOR ADDITIONAL INFORMATION.

J. SPRINKLER SYSTEM SHALL NOT BE MODIFIED ABOVE CRITICAL ELECTRONIC EQUIPMENT IN AREA OF WORK. THIS EQUIPMENT CONTROLS AIR TRAFFIC AND IS DEEMED CRITICAL FOR THE LIFE SAFETY OF THE FLYING PUBLIC. SPRINKLER BRANCH LINES SHALL ONLY CROSS EQUIPMENT WHEN NECESSARY.

K. CLEAN CONSTRUCTION AREAS DAILY TO SATISFACTION OF COR. CONSTRUCTION DEBRIS & EQUIPMENT IN OCCUPIED AREAS SHALL BE REMOVED IMMEDIATELY.

L. PROVIDE AIR BARRIERS AS RECOMMENDED BY ACCESS FLOOR MANUFACTURER IN LOCATIONS WHERE THREE (3) OR MORE FLOOR PANELS HAVE BEEN REMOVED UNLESS DUSTPROOF STRUCTURES ARE PRESENT.

M. DIMENSION LINES SHOWN ON ARCHITECTURAL SHEETS ARE FROM COLUMN CENTER LINES AND FACE OF MASONRY, CONCRETE OR FINISH SURFACE, UNLESS OTHERWISE NOTED.

N. WORK SPECIFIED IN ROOMS/AREAS WITH BREAK LINES INCLUDES WORK FOR ENTIRE AREA, UNLESS OTHERWISE NOTED.

O. ONLY FAA PERSONNEL MAY OPERATE CIRCUIT BREAKERS OR PIPE VALVES. CONTRACTOR SHALL REQUEST PERMISSION OF FAA IN ADVANCE AND IN WRITING FOR EACH CASE OF BREAKER OR PIPE VALVE OPERATION. CONTRACTOR SHALL NOT OPEN (DE-ENERGIZE) OR CLOSE (ENERGIZE) ANY CIRCUIT BREAKER OR PIPE VALVE. COORDINATE DE-ENERGIZING, AND ENERGIZING, OF ANY PANELBOARD FOR CIRCUIT BREAKER REPLACEMENT WITH COR.

P. THIS BUILDING HAS BEEN IDENTIFIED AS CONTAINING HAZMAT MATERIALS. COORDINATE THE WORK WITH HAZMAT ABATEMENT DRAWINGS AND REPORTS. IF HAZMAT MATERIALS ARE DISCOVERD DURING THE WORK, NOTIFY COR, ISOLATE AREA, AND CEASE WORK IN THAT AREA UNTIL A PLAN HAS BEEN DEVELOPED TO RESUME WORK IN THAT AREA. COORDINATE WORK IN OTHER AREAS WITH COR.

Q. WORK IN CONFINED SPACES OR AREAS SHALL BE DONE IN ACCORDANCE WITH OSHA REQUIREMENTS, 29 CFR 1910.146 AND 1926.21(6)(i).

R. PRIOR TO CUTTING CONCRETE, USE MAGNETIC STEEL INDICATOR TO LOCATE EMBEDDED ELECTRICAL CONDUITS. AVOID CUTTING CONDUITS AS THEY MAY BE CRITICAL TO THE OPERATION OF THE FACILITY. COORDINATE CUTTING WITH COR.

S. FAA HAS A NATIONAL CONTRACT FOR THE SUPPLY AND REPAIR OF ACCESS CONTROL AND SECURITY. SECURITY RELATED WORK, INCLUDING ACCESS CONTROL AND COORDINATING ELECTRICAL DOOR HARDWARE, SHALL BE DONE BY FAA APPROVED SECURITY CONTRACTOR (SSDI) WHO SHALL BE RETAINED BY THE CONTRACTOR FOR THIS PROJECT.

BUILDING CODE ANALYSIS

NOTE: THIS BUILDING CODE ANALYSIS IS BASED ON THE ASSUMPTION THAT THE ARTCC REMAIN FULLY SPRINKLERED AT COMPLETION OF THIS PROJECT AND IS GENERATED BASED ON AS-BUILT DOCUMENTATION FOR COMPLIANCE WITH THE CODES IN EFFECT AT THE TIME OF PROJECT AWARD.

1. APPLICABLE CODES AND REGULATIONS:
   INTERNATIONAL BUILDING CODE (IBC), 2018 EDITION
   NFPA 101 - LIFE SAFETY CODE, 2018 EDITION
   ABAAS, ADA AND ABA ACCESSIBILITY GUIDELINES FOR BUILDINGS AND FACILITIES (2010)
   OCCUPATIONAL SAFETY & HEALTH ADMINISTRATION (OSHA) GENERAL INDUSTRY SAFETY & HEALTH STANDARDS (29 CFR 1910 AND 1926 - CURRENT ISSUE).
   NFPA 70 (NATIONAL ELECTRICAL CODE (NEC), 2017
   INTERNATIONAL FIRE CODE, 2018 EDITION
   INTERNATIONAL MECHANICAL CODE, 2018 EDITION
   NFPA 13, INSTALLATION OF SPRINKLER SYSTEMS, 2016 EDITION
   NFPA 72, NATIONAL FIRE ALARM CODE, 2016 EDITION
2. OCCUPANCY CLASSIFICATION: IBC, GROUP B
   NFPA 101, EXISTING BUSINESS
3. CONSTRUCTION TYPE: ADMINISTRATION WING - TYPE II B IBC
   CONTROL AND AUTOMATION WING - TYPE II A IBC
4. BASEMENT FLOOR APPROXIMATE GROSS SQUARE FOOT AREAS:

ADMINISTRATION WING	19,500 SF	
CONTROL WING	18,105 SF	
AUTOMATION WING	12,035 SF	
	49,640 SF	TOTAL

   PUMP HOUSE FLOOR APPROXIMATE GROSS SQUARE FOOT AREAS:

PUMP HOUSE - EXISTING	600 SF	
ELECTRICAL ROOM - NEW	160 SF	
	760 SF	TOTAL

5. SEISMIC CRITERIA:
   SEISMIC RISK CATEGORY: IV
   SEISMIC IMPORTANCE FACTOR: 1.5
   MAPPED SPECTRAL RESPONSE ACCELERATION, Ss: 0.191
   MAPPED SPECTRAL RESPONSE ACCELERATION, S1: 0.059
   DESIGN SPECTRAL ACCELERATION, Sds: 0.203
   DESIGN SPECTRAL ACCELERATION, Sd1: 0.095
   SITE CLASS: B
   SEISMIC DESIGN CATEGORY: C
6. WIND LOAD CRITERIA:
   WIND RISK CATEGORY: IV (ASCE 7-10, TABLE 1.5-1)
   WIND SPEED: 149 MPH (3SEC GUST, STRENGTH)
   WIND CODE: ASCE 7-10
7. SNOW LOAD CRITERIA:
   GROUND SNOW LOAD, Pg = 30 PSF
   PUMP HOUSE ELECTRICAL ADDITION
   -FLAT SNOW LOAD, Pf = 27.2 PSF
   - SNOW EXPOSURE FACTOR, Ce = 0.9
   -SNOW LOAD IMPORTANCE FACTOR, Is = 1.2
   -THERMAL FACTOR, Ct = 1.2

LOCATION MAP

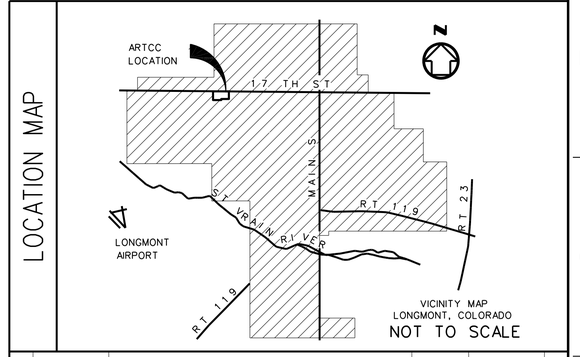

REV	APPROVED DATE	DESCRIPTION	JCN	REDLINE DATE	APVD

DEPARTMENT OF TRANSPORTATION
FEDERAL AVIATION ADMINISTRATION
ATO - TECHNICAL OPERATIONS **WESTERN SERVICE AREA**

ARTCC

MAJOR MECHANICAL MODERNIZATION
DRAWING INDEX, GENERAL NOTES
LOCATION MAP AND BUILDING CODE ANALYSIS

DENVER LONGMONT CO

REVIEWED BY	SUBMITTED BY: PAUL TULENKO (DO NOT SIGN)	APPROVED BY: CALLEN R. COLLINS (DO NOT SIGN)	
	PROJECT ENGINEER	MGR: ENGINEERING - SEATTLE	
DESIGNED PT	ISSUED BY: ENGINEERING SERVICES ENROUTE/FSS	DATE	JCN 1401893
DRAWN JA		DRAWING NO: ZDV-1401893-G002	REV
CHECKED			

ISSUED FOR:

rdr-1401893-g002.dgn 6/28/2018 10:28:52 AM John CTR Allen

EDM zdv-1401893-g002.dgn

DRAWING PRODUCED ON WSA MICROSTATION SYSTEM

ABBREVIATIONS

A	A	AMPERE, AIR, COMPRESSED AIR LINE
	AA	AIR COOLED
	AAV	AUTOMATIC AIR VENT
	AC	ALTERNATING CURRENT, ASPHALT CONC OR AIR COMPRESSOR
	ACC	AIR COOLED LIQUID CHILLER
	ACD	ADDRESSABLE CONTROL DEVICE
	ACM	ASBESTOS CONTAINING MATERIAL
	ACT	ACCESS CONTROL TERMINAL
	ACU	AIR CONDITIONING UNIT
	A/C	AIR CONDITIONING
	AD	AREA DRAIN, ACCESS DOOR
	ADJ	ADJACENT OR ADJUSTABLE
	ADR	ACCESS DOOR
	ADTN	ADMINISTRATIVE DATA TRANSMISSION NETWORK
	AF	AMPERE FRAME, AIR FLOW SENSOR
	AFF	ABOVE FINISH FLOOR
	AFMS	AIR FLOW MEASURING STATION
	AH/AHU	AIR HANDLING UNIT
	AIC	AMPERES INTERRUPTING CAPACITY
	AID	ADDRESSABLE INTERFACE DEVICE
	AIF	AIR INTAKE FILTER
	AL	ALUMINUM
	ALT	ALTERNATE
	AM	AMP METER
	AMM	AMMETER
	ANN	ANNUNCIATOR
	AO	ANALOG OUTPUT
	AP	ANNUNCIATOR POINT
	APC	ACOUSTICAL PANEL CEILING
	APPROX	APPROXIMATELY
	ARCH	ARCHITECT(URAL)
	ARTCC	AIR ROUTE TRAFFIC CONTROL CENTER
	ARTS	AUTOMATED RADAR TERMINAL SYSTEM
	AS	AIR SEPARATOR
	ASSY	ASSEMBLY
	AT	AMPERE TRIP
	ATB	AIR TERMINAL BOX
	ATS	AUTOMATIC TRANSFER SWITCH
	AUX	AUXILIARY
	AV	ACID VENT
	AVG	AVERAGE
	AWG	AMERICAN WIRE GUAGE
	AWP	ACOUSTICAL WALL PANEL
	AWR	AUTOMATION WING REHABILITATION
	&	AND
	@	AT
B	B	BOILER
	BAT CHGR	BATTERY CHARGER
	BC	BARE COPPER
	BD	BOARD, BACK-DRAFT DAMPER, BLOWDOWN
	BEL	BELOW
	BF	BLIND FLANGE
	BFP	BACK FLOW PREVENTER
	BFV	BUTTERFLY VALVE
	BFW	BOILER FEED WATER
	BHP	BRAKE HORSE POWER
	BKR	BREAKER
	BLDG	BUILDING
	BLKG	BLOCKING
	BLO	BLOWER
	BLV	BALANCING VALVE
	BM	BENCH MARK OR BEAM
	BOD	BOTTOM OF DUCT
	BOP	BOTTOM OF PIPE
	BOT, BOTT	BOTTOM
	BPU	BREAKER PROGRAMMING UNIT
	BRG	BEARING
	BSMT	BASEMENT
	BTU	BRITISH THERMAL UNIT
	BTU/H	BRITISH THERMAL UNIT PER HOUR
	BV	BALL VALVE
	BWP	BACK WATER PREVENTER
	BWV	BACK WATER VALVE
C	C	CONDUIT
	CA	COMBUSTION AIR
	CAB	CABINET
	CB	CIRCUIT BREAKER
	CC	COOLING COIL
	CCMS	CENTRAL CONTROL AND MONITORING SYSTEM
	CD	CONTROL DAMPER, CEILING DIFFUSER, CONDENSATE DRAIN
	CENT	CENTRIFUGAL
	CFH	CUBIC FEET PER HOUR
	CFM	CUBIC FEET PER MINUTE
	CFT	CUBIC FOOT
	CG	CEILING GRILLE
	CH	CHILLER
	CI	CURB INLET, CAST IRON
	CIP	CAST IRON PIPE, CAST IN PLACE
	CIR	CIRCULATING
	CKT	CIRCUIT
	CL, ℄	CENTER LINE
	CLF	CURRENT LIMITING FUSE
	CLG	CEILING
	CLR	CLEAR
	CMP	CORRUGATED METAL PIPE
	CMU	CONCRETE MASONRY UNIT
	CO	CLEANOUT, CONDUIT ONLY
	COL	COLUMN
	COMB	COMBINATION, COMBINE, COMBUSTION AIR
	COMM	COMMUNICATIONS
	COMP	COMPRESSIBLE, COMPRESSED
	CONC	CONCRETE
	COND	CONDITION, CONDENSATE
	CONN	CONNECTION
	CONST	CONSTRUCTION
	CONT	CONTINUOUS OR CONTINUATION
	CONTR	CONTRACTOR
	COR	CONTRACTING OFFICER REPRESENTATIVE
	COTR	CONTRACTING OFFICER TECHNICAL REPRESENTATIVE
	CP	CONTROL PANEL, CIRCULATING PUMP
	CPC	CRITICAL POWER CENTER
	CPT	CARPET/RAISED FLOOR
	CPU	CENTRAL PROCESSING UNIT
	CR	CEILING REGISTER, CONTROL RELAY
	CS	CONTROL SWITCH
	CT	CABLE TRAY, COOLING TOWER
	CTR	CENTER, COOLING TOWER WATER RETURN
	CTS	COOLING TOWER WATER SUPPLY
	CU	CONDENSING UNIT
	CW	DOMESTIC COLD WATER
	CWR	CHILLER WATER RETURN
	CWS	CHILLER WATER SUPPLY
	CWV	COMBINATION WASTE AND VENT
	CU	CONDENSING UNIT
	CV	CONTROL VALVE, CONSTANT VOLUME TERMINAL
	CYD	CUBIC YARD
D	D	DRAIN, DELTA CONNECTION, DIFFUSER, DAMPER
	DB	DIRECT BURIAL, DRY BULB
	DBL	DOUBLE
	DC	DIRECT CURRENT
	DDCP	DIRECT DIGITAL CONTROL PANEL
	DEG	DEGREE(S)
	DET	DETAIL
	DGP	DATA GATHERING PANEL
	DI	DROP INLET, DAMPER POSITION INDICATOR, DIGITAL INPUT
	DIA	DIAMETER
	DIAG	DIAGONAL
	DISC	DISCONNECT
	DISP	DISPENSER
	DIST	DISTRIBUTION
	DL	DEAD LOAD
	DM	DEMAND METER
	DN	DOWN
	DO	DIGITAL OUTPUT
	DOM	DOMESTIC
	DP	DUSTPROOF PARTITION, DIFFERENTIAL PRESSURE SWITCH
	DPDT	DOUBLE POLE DOUBLE THROW
	DPNL	DISTRIBUTION PANEL
	DPST	DOUBLE POLE SINGLE THROW
	DR	DOOR
	DWG(S)	DRAWING(S)
E	EA	EACH, EXHAUST AIR
	EAT	ENTERING AIR TEMPERATURE
	ECP	ENGINE CONTROL PANEL
	EDAM	ELECTRICAL DATA ACQUISITION AND MONITORING
	EF	EXHAUST FAN
	EFF	EFFICIENCY
	EG	ENGINE GENERATOR, EXHAUST GRILLE
	EH	ELECTRIC HEATER
	EHC	ELECTRIC HEATING COIL
	EL, ELEV	ELEVATION, ELEVATOR
	ELEC	ELECTRIC(AL)
	EMD	ESTIMATED MAXIMUM DEMAND
	EMERG	EMERGENCY
	EMT	ELECTRICAL METALLIC TUBING
	ENT	ELECTRICAL NON-METALLIC TUBING
	EP	EXHAUST PIPE
	EQ	EQUAL
	EQUIP	EQUIPMENT
	ER	EXHAUST REGISTER
	ERMS	ENVIRONMENTAL REMOTE MONITORING SYSTEM
	ES	EXHAUST SILENCER
	ET	ELECTRIC HEAT TRACE
	EWC	ELECTRIC WATER COOLER
	EWH	ELECTRIC WATER HEATER
	EXH	EXHAUST
	EXIST, EX	EXISTING
	EXP	EXPOSED
	EXPN	EXPANSION
	EXT	EXTERIOR
	F	FILTER, FIRE LINE
F	FA	FAN COOLED
	FAA	FEDERAL AVIATION ADMINISTRATION
	FC	FAN COIL UNIT
	FCO	FLOOR CLEANOUT
	FCV	FLOW CONTROL VALVE
	FD	FIRE DAMPER OR FLOOR DRAIN
	FD/SD	COMBINATION FIRE AND SMOKE DAMPER
	FDR	FEEDER
	FE	FIRE EXTINGUISHER
	FEC	FIRE EXTINGUISHER CABINET
	FEPC	FRONT END PERSONAL COMPUTER
	FFE	FINISHED FLOOR ELEVATION
	FHC	FIRE HOSE CABINET
	FI	FLANGE INSULATION, FLOW INDICATOR
	FIN	FINISH
	FIX, FIXT	FIXTURE
	FL, FLR	FLOOR
	FLA	FULL LOAD AMPERES
	FLEX	FLEXIBLE DUCT
	FLG	FLANGE
	FLUOR	FLUORESCENT
	FM	FLOW METER, FIRE MAIN
	FO	FIBER OPTIC
	FOL	FUEL OIL LEVEL
	FOR	FUEL OIL RETURN
	FOS	FUEL OIL SUPPLY
	FOT	FIBER OPTIC TERMINAL
	FOV	FUEL OIL VENT
	FPM	FEET PER MINUTE
	FPU	FIELD PROGRAMMING UNIT
	FRP	FIBER GLASS REINFORCED PLASTIC
	FS	FLOW SWITCH
	FT,'	FEET
	FTR	FINNED TUBE RADIATION
	FV	FULL VOLTAGE
	FZ	FREEZESTAT
G	G	GAS
	GA	GAGE, GUAGE
	GALV	GALVANIZED
	GEN	GENERATOR
	GFE	GOVERNMENT FURNISHED EQUIPMENT
	GFM	GOVERNMENT FURNISHED MATERIAL
	GL	GLASS
	GND	GROUND, GROUND CONNECTOR
	GPH	GALLONS PER HOUR
	GPM	GALLONS PER MINUTE
	GR	GRILLE
	GRV	GRAVITY VENT
	GS	GAS SENSOR
	GV	GATE VALVE
	GW	GLYCOL WASTE
	GWB	GYPSUM WALLBOARD
	GWH	GAS WATER HEATER
H	H	HUMIDISTAT
	HAZMAT	HAZARDOUS MATERIALS
	HB	HOSE BIBB
	HC	HEATING COIL
	HCS	HOST COMPUTER SYSTEMS
	HDW	HARDWARE
	HE	HEAT EXCHANGER
	HERM	HERMETIC
	HM	HOLLOW METAL
	HORIZ	HORIZONTAL
	HP	HORSE POWER, HEAT PUMP HIGH PRESSURE
	HPL	HIGH PRESSURE LAMINATE
	HPS	HIGH PRESSURE SODIUM, HIGH PRESSURE STEAM
	HPT	HIGH POINT
	HR	HOUR
	HS	HIGH STRENGTH, HUMIDITY SENSOR
	HT	HEIGHT
	HTG	HEATING
	HTP	HOT TAP (W/STOPPLE FITTING)
	HTR	HEATER
	HU	HUMIDIFIER
	HVAC	HEATING/VENTILATING/AIR CONDITIONING
	HW	DOMESTIC HOT WATER
	HWL	HIGH WATER LEVEL
	HWR	HOT WATER RETURN
	HWS	HOT WATER SUPPLY
	HZ	HERTZ
	HWY	HIGHWAY
I	IBC	IINTERNATIONAL BUILDING CODE
	ID	INSIDE DIAMETER
	IEWH	INSTANTANEOUS ELECTRIC WATER HEATER
	IF	INSIDE FACE OR INTERIAL FILTER
	IN,''	INCH
	INST	INSTRUMENT
	INSUL	INSULATION
	INT	INTERIOR
	INV	INVERT
J	J	JUNCTION
	JB	JUNCTION BOX
K	KCMIL	THOUSAND CIRCULAR MILS
	KVA	KILOVOLT AMPERE
	KW	KILOWATTS
L	LAN	LOCAL AREA NETWORK
	LBS, #	POUNDS
	LCC	LEAD COATED COMPONENT
	LCP	LOCAL CONTROL PANEL
	LCV	LEVEL CONTROL VALVE
	LF	LINEAR FEET
	LG	LEVEL GAUGE
	LL	LIVE LOAD
	LLH	LONG LEG HORIZONTAL
	LLV	LONG LEG VERTICAL
	LONG	LONGITUDINAL
	REG	REGISTER
	REINF	REINFORCING
	LP	LOW POINT
	LPS	LOW PRESSURE STEAM
	LS	LEVEL SWITCH
	LT	LIGHT
	LTG	LIGHTING
M	M	MOTOR
	MAS	MASONRY
	MAT	MATERIAL
	MAX	MAXIMUM
	MCC	MOTOR CONTROL CENTER
	MECH	MECHANICAL
	MET	METAL
	MFGR, MFG	MANUFACTURER
	MG	MOTOR GENERATOR
	MIL	MILLIMETER
	MIN	MINIMUM
	MO	MASONRY OPENING
	MOD	MODIFICATION
	MS	MOISTURE SENSOR
	MTG	MOUNTING OR MOUNTED
N	NARACS	NATIONAL RADIO COMMUNICATIONS SYSTEM
	NFPA	NATIONAL FIRE PROTECTION ASSOCIATION
	NIC	NOT IN CONTRACT
	NO, #	NUMBER
	NOM	NOMINAL
	NPT	NATIONAL PIPE THREAD
	NTS	NOT TO SCALE
O	OA	OUTSIDE AIR
	OC	ON CENTER
	OD	OUTSIDE DIAMETER, OPEN DRAIN
	OF	OUTSIDE FACE
	OH	OPPOSITE HAND
	OPNG	OPENING
	OPP	OPPOSITE
	OSHA	OCCUPATIONAL SAFETY & HEALTH ADMINISTRATION
	OSW	OPERATIONS SUPPORT WING
P	P	PUMP, PHASE OR POLE
	PBX	PRIVATE BRANCH EXCHANGE
	PC	PRESSURE CONTROL SWITCH
	PCB	POLYCHLORINATED BIPHENYLS
	PCF	POUNDS PER CUBIC FOOT
	PHC	PREHEAT COIL
	PD	PRESSURE DIFFERENTIAL
	PDI	PRESSURE DIFFERENTIAL INDICATOR
	PDS	PRESSURE DIFFERENTIAL SENSOR
	PH	PHASE
	PI	POINT OF INTERSECTION, PRESSURE INDICATOR
	PIV	POST INDICATOR VALVE
	PL	PROPERTY LINE OR PLATE
	PLF	POUNDS PER LINEAR FOOT
	PNL	PANEL
	POC	POINT OF CONNECTION
	PRV	PRESSURE REDUCING VALVE
	PS	PRESSURE SENSOR
	PSF	POUNDS PER SQUARE FOOT
	PSI	POUNDS PER SQUARE INCH
	PSM	POWER SYSTEMS MODIFICATION
	PT	POINT OF TANGENCY
	PTVC	POINT OF VERTICAL CURVATURE
	PVC	POLYVINYL CHLORIDE
	PVDS	PORTABLE VISUAL DISPLAY SYSTEM
	PVI	POINT OF VERTICAL INTERSECTION
	PVT	POINT OF VERTICAL TANGENCY
R	R	RISER
	RA	RETURN AIR
	RAD, R	RADIUS
	RCP	REFLECTED CEILING PLAN
	RCRA	RESOURCE CONSERVATION AND RECOVERY ACT
	RECEPT RPTS	RECEPTACLE
	REF	REFERENCE
	REQ'D	REQUIRED
	REV	REVERSE, REVISION
	RF	RETURN FAN
	RGS	RIGID GALVANIZED STEEL
	RHC	REHEAT COIL
	RM	ROOM
	RO	ROUGH OPENING
	RV	REFRIGERANT VENT
	S	SMOKE DETECTOR
S	SA	SUPPLY AIR
	SAN	SANITARY
	SAP	SOUND ABSORBING PANEL
	SCH, SCHED	SCHEDULE
	SD	SMOKE DAMPER
	SEC	SECTION
	SF	SUPPLY FAN, SQUARE FEET
	SHT	SHEET
	SIG	SIGNAL
	SIM	SIMILAR
	SM	SPRINKLER MAIN
	SP	SUMP PUMP/SEWAGE PUMP, STATIC PRESSURE INDICATOR
	SPEC	SPECIFICATIONS
	SQ	SQUARE
	SRF	SAFETY RUBBER FLOOR TILE
	SRG	SIGNAL REFERENCE GRID
	SSTL	STAINLESS STEEL
	ST	STEAM, STREET
	STA	STATION
	STC	SOUND TRANSMISSION CLASS
	STD	STANDARD
	STE	STANDARD TAPERED END
	STGP	SIGNAL TRANSPORT GROUND PLANE
	STL	STEEL
	STOR	STORAGE
	STR	STRUCTURAL, STRUCTURE
	SUCT	SUCTION
	SUSP	SUSPENDED
	SW	SWITCH
	SYM	SYMMETRICAL
	T	THERMOSTAT, TREAD
T	TBD	TO BE DETERMINED
	T&B	TOP AND BOTTOM
	T&G	TONGUE AND GROOVE
	TC	TEMPERATURE CONTROL SWITCH
	TELCOM	TELECOMMUNICATION, TELEPHONE COMPANY LINE
	TEMP	TEMPERATURE
	TI	TEMPERATURE INDICATOR
	TIC	TEMPERATURE INDICATING CONTROLLER
	TK	TANK
	TM&O	TELECOMMUNICATIONS MANAGEMENT AND OPERATIONS
	TOC	TOP OF CONCRETE
	TOS	TOP OF STEEL
	TOW	TOP OF WALL
	TRANS	TRANSVERSE
	TS	TEMPERATURE SENSOR, TAMPER SWITCH
	TYP	TYPICAL
U	UH	UNIT HEATER
	UL	UNDERWRITER'S LABORATORIES, INC.
	UON	UNLESS OTHERWISE NOTED
	UPS	UNINTERRUPTIBLE POWER SYSTEM
	UTIL	UTILITY
	UV	UNIT VENTILATOR
V	V	VOLT
	VAT	VINYL ASBESTOS TILE
	VAV	VARIABLE AIR VOLUME TERMINAL
	VB	VINYL BASE
	VBT	VINYL BASE & TRIM COMPONENTS
	VC	VERTICAL CURVE
	VCT	VINYL COMPOSITION TILE
	VD	VOLUME DAMPER
	VERT	VERTICAL
	VF	VERTICAL FEET OR VENTILATION FAN
	VFD	VARIABLE FREQUENCY DRIVE
	VGWB	VINYL SURFACED GYPSUM WALL BOARD
	VIF	VERIFY IN FIELD
	VP	VELOCITY PRESSURE, VACUUM PRODUCER
	VS	VIBRATION SWITCH
W	W	WATT
	W/	WITH
	WD	WOOD
	WG	WATER GAGE
	W/O	WITHOUT
	WP	WEATHERPROOF
	WT	WEIGHT
X	XFER, XFR	TRANSFER
	XFMR	TRANSFORMER
Y	Y	WYE CONNECTION
	YD	YARD
	YH	YARD HYDRANT

REV	APPROVED DATE	DESCRIPTION	JCN	REDLINE DATE	APVD

DEPARTMENT OF TRANSPORTATION
FEDERAL AVIATION ADMINISTRATION
ATO - TECHNICAL OPERATIONS WESTERN SERVICE AREA

ARTCC
MAJOR MECHANICAL MODERNIZATION

ABBREVIATIONS

DENVER LONGMONT CO

REVIEWED BY

SUBMITTED BY: PAUL TULENKO — PROJECT ENGINEER
APPROVED BY: CALLEN R. COLLINS — MGR: ENGINEERING - SEATTLE

DO NOT SIGN

DESIGNED PT
DRAWN JA
CHECKED

ISSUED BY: ENGINEERING SERVICES ENROUTE/FSS

DATE
JCN 1401893
DRAWING NO ZDV-1401893-G003
REV

ISSUED FOR:

DRAWING PRODUCED ON WSA MICROSTATION SYSTEM

rdn-1401893-g003.dgn 6/27/2018 10:03:57 AM John CTR Allen
EDM: zdv-1401893-g003.dgn

GENERAL LEGEND

REFERENCE:

COLUMN LINE GRID DESIGNATION — C-C; 8

BREAK LINES

ELEVATION SYMBOL — FIN FLR; EL. 89'-6"

OUTLINE OF OBJECT ABOVE OR BEYOND

DETAIL TITLE REFERENCE — DETAIL DESIGNATION: C8; SHEET ON WHICH DETAIL IS DRAWN OR SCHEDULED: A201

DETAIL REFERENCE — DETAIL DESIGNATION: C8; SHEET ON WHICH DETAIL IS DRAWN: A701

SECTION CUT — SECTION DESIGNATION: C8; SHEET ON WHICH SECTION IS CUT: A401

PARTIAL SECTION CUT — SECTION DESIGNATION: C8; SHEET ON WHICH SECTION IS CUT: A401

ELEVATION REFERENCE — ELEVATION DESIGNATION: E1; SHEET ON WHICH ELEVATION IS DRAWN: A301

ELEVATION DESIGNATION AND/OR INTERIOR WALL FINISH SCHEDULE — ELEVATION NUMBER: E1, E2, E3, E4; DETAIL NUMBER: C8; DARKENED ARROW INDICATES ELEVATION SHOWN: A701

GRAPHIC SCALE — 8' 0 8' 16'; SCALE: 1/8" = 1'-0"

NORTH ARROW — N

ROOM NAME & NUMBER — ELECTRONIC EQUIPMENT ROOM; B101A

DEMOLITION BY CONTRACTOR, UON

DEMOLITION BY CONTRACTOR, UON

ARCHITECTURAL LEGEND

REFERENCE (CONT):

SHEET NOTE NUMBER — 1

HAZMAT NOTE, ASBESTOS & PCB REFER TO HAZMAT DWG FOR SPECIFIC INFORMATION — 1,2,3; 1,2

HAZMAT NOTE, LEAD PAINT REFER TO HAZMAT DWG FOR SPECIFIC INFORMATION — 11

DEMOLITION NOTE NUMBER — 1

SYMBOLS

CEILING HEIGHT DESIGNATION — 8'-6" AFF

	EXISTING	NEW
METAL STUD WALL		
ACCESS FLOOR PANELS		PERFORATED AIR FLOW PANEL
ACOUSTICAL PANEL CEILING (APC)		
LIGHT FIXTURE		
SUPPLY AIR CEILING DIFFUSER		
RETURN AIR CEILING REGISTER		
TRANSFER AIR GRILLE		
FIRE EXTINGUISHER	FE	
FIRE EXTINGUISHER CABINET W/ FIRE EXTINGUISHER	SURFACE MOUNTED	RECESSED
LAVATORY		
URINAL		
WATER CLOSET		
TEMPORARY DUSTPROOF PARTITION WITH DOOR	DP	DP
DOOR NUMBER	43	
PARTITION TYPE	NUMBER INDICATES FIRE RATING; LETTER INDICATES PARTITION TYPE	1A

MATERIALS:

EARTH — EARTH

CONCRETE — CONC

METALS — STEEL; STRUCT STL

GYPSUM

WOOD — PLYWOOD; BLKG

ACOUSTICAL WALL PANEL (AWP)

REV	APPROVED DATE	DESCRIPTION	JCN	REDLINE DATE	APVD

DEPARTMENT OF TRANSPORTATION
FEDERAL AVIATION ADMINISTRATION
ATO - TECHNICAL OPERATIONS — WESTERN SERVICE AREA

ARTCC
MAJOR MECHANICAL MODERNIZATION
GENERAL/ARCHITECTURAL - LEGENDS

DENVER — LONGMONT — CO

REVIEWED BY

SUBMITTED BY: PAUL TULENKO — PROJECT ENGINEER

APPROVED BY: CALLEN R. COLLINS — MGR: ENGINEERING - SEATTLE

DO NOT SIGN

DESIGNED: PT
DRAWN: JA
CHECKED

ISSUED BY: ENGINEERING SERVICES ENROUTE/FSS

DATE
JCN: 1401893
DRAWING NO: ZDV-1401893-G004
REV

ISSUED FOR:

DRAWING PRODUCED ON WSA MICROSTATION SYSTEM

rsb-1401893_g004.dgn 6/27/2018 3:39:01 PM John CTR Allen

EDM: zdv-1401893-g004.dgn

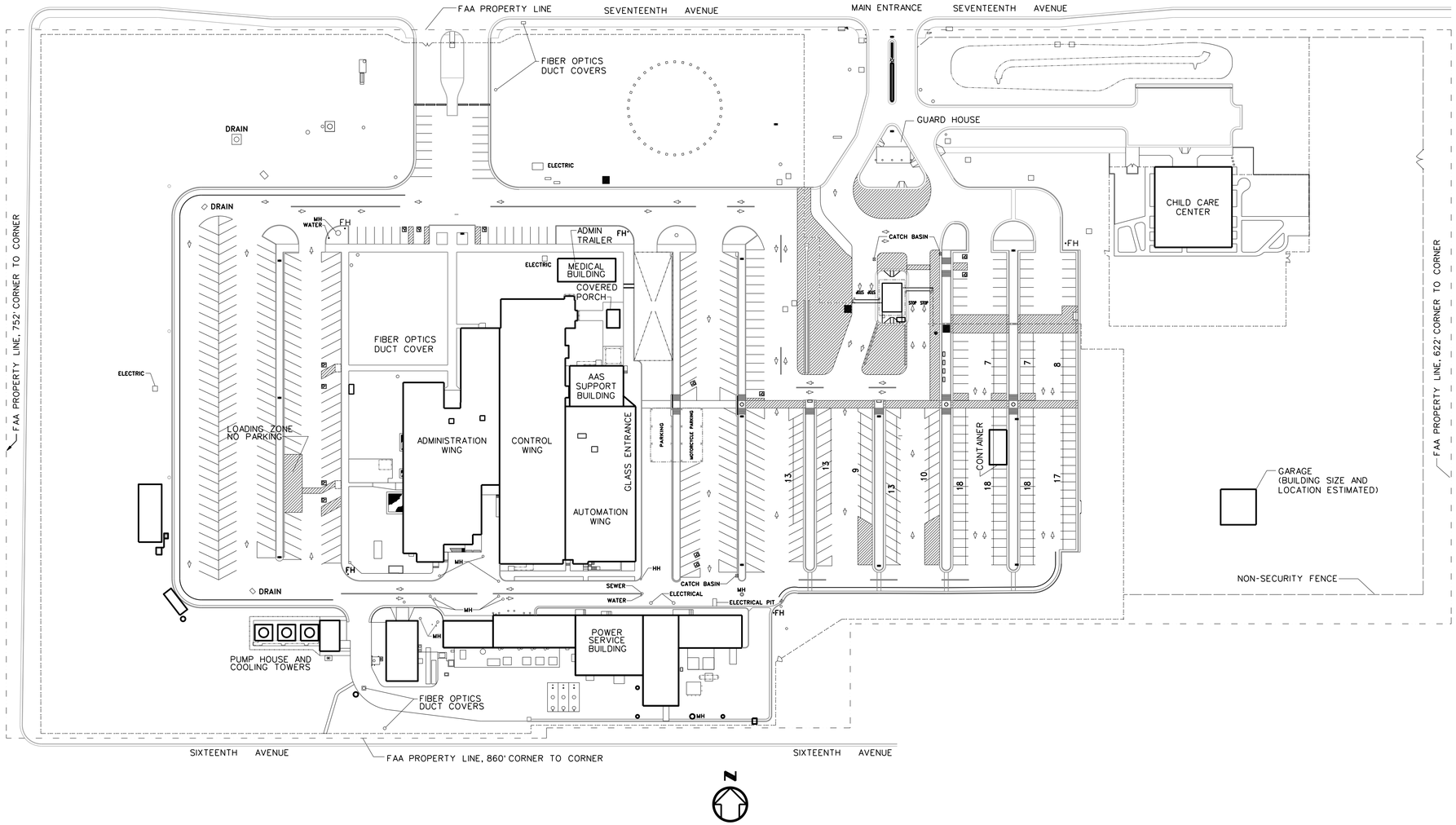

CONSTRUCTION STAGING PLAN NOTES:

THE FOLLOWING NOTES AND ACCOMPANYING "CONSTRUCTION STAGING PLAN" GRAPHICALLY REPRESENT MANY OF THE MAJOR REQUIREMENTS STATED IN "DIVISION 1 GENERAL REQUIREMENTS" OF THE SPECIFICATIONS. THESE NOTES PARAPHRASE DIVISION 1 REQUIREMENTS AND ARE NOT INTENDED TO MODIFY OR REPLACE DIVISION 1 REQUIREMENTS.
CONSTRUCTION ACCESS, PARKING, OFFICES AND EXTENT/SIZE OF CONSTRUCTION STAGING AREA SHALL BE COORDINATED WITH SITE PERSONNEL VIA COR; PARTICULARLY IN CONJUNCTION WITH ONGOING PROJECTS.

A. CONSTRUCTION ACCESS

A.1 CONTRACTOR'S VEHICLES, PEDESTRIAN AND DELIVERIES TO SITE SHALL BE THROUGH MAIN ENTRANCE SECURITY GATE.

A.2 PROVIDE SIGNAGE TO INDICATE ACCESS ROUTE FOR CONSTRUCTION EMPLOYEES AND DELIVERIES ON SITE. PROVIDE NECESSARY BARRICADES, LIGHTS, SIGNAGE AND FENCING TO PROTECT, WARN AND DIRECT PERSONS NEAR CONSTRUCTION AREAS.

A.3 CONTRACTOR'S ACCESS TO BUILDING SHALL BE LIMITED TO THE FOLLOWING LOCATIONS: 1) LOADING DOCK; 2) CHILLER ROOM AND CHILLER ROOM AREAWAY.

A.4 CONTRACTOR SHALL KEEP LOADING DOCK, FREIGHT ELEVATOR, AND CAFETERIA ACCESSIBLE AT ALL TIMES FOR FAA DELIVERIES.

A.5 DELIVERIES SHALL BE SCHEDULED AND APPROVED IN ADVANCE WITH THE COR. DELIVERIES SHALL NOT OCCUR OR EXTEND OUTSIDE OF ESTABLISHED NORMAL WORKING HOURS, SHALL NOT OCCUR WITHOUT THE PRESENCE OF THE COR ON SITE AND SHALL NOT OCCUR DURING FAA EMPLOYEE SHIFT CHANGES FROM 6:30 TO 8:00 AM AND 2:00 TO 4:00 PM, UNLESS OTHERWISE ARRANGED WITH THE COR.

B. CONTRACTOR PARKING

B.1 CONTRACTOR'S PARKING SHALL BE LIMITED TO CONSTRUCTION STAGING AREA. ADDITIONAL PARKING SHALL BE OFF-SITE AND PROVIDED BY CONTRACTOR. EXISTING PARKING SPACES AT ARTCC ARE OFF-LIMITS FOR CONTRACTOR PARKING.

C. CONSTRUCTION MATERIAL STORAGE

C.1 THE CONSTRUCTION STAGING AREA INCLUDING REQUIRED FENCING, LIGHTING AND ALL OTHER PROPOSED ELEMENTS SHALL BE ESTABLISHED IN COORDINATION WITH AND APPROVED BY THE COR.

C.2 SCHEDULE MATERIAL AND EQUIPMENT DELIVERIES TO MINIMIZE ON-SITE STORAGE TIME. STAGED MATERIALS SHALL BE NEATLY STORED AND PROTECTED.

C.3 PRIOR TO ANY DIGGING, CONTRACTOR SHALL PERFORM AND IS RESPONSIBLE FOR UNDERGROUND UTILITY LOCATES AND SHALL AVOID DAMAGE TO UNDERGROUND UTILITIES. COORDINATE WITH THE COR.

D. CONSTRUCTION DEBRIS

D.1 ENCLOSED DUMPSTERS FOR DISPOSAL OF CONSTRUCTION DEBRIS SHALL BE PROVIDED BY CONTRACTOR WITHIN THE CONSTRUCTION STAGING AREA. AREAS AROUND DUMPSTERS SHALL BE KEPT CLEAN AND FREE OF EXCESS DEBRIS AND DUST DURING CONSTRUCTION. DEBRIS SHALL BE REMOVED BY CONTRACTOR DAILY.

E. CONSTRUCTION OFFICE

E.1 CONTRACTOR'S TRAILERS FOR OFFICE, MATERIALS AND EQUIPMENT STORAGE SHALL BE LOCATED IN CONSTRUCTION STAGING AREA. CONTRACTOR SHALL PROVIDE TELEPHONE AND BOTTLED WATER. TEMPORARY POWER AND WATER IS AVAILABLE AT ARTCC, IF REQUIRED FOR CONSTRUCTION PURPOSES OF THE WORK TRAILER. POINT OF CONNECTION SHALL BE DETERMINED AT PRECONSTRUCTION CONFERENCE. HOOK-UPS SHALL BE THE RESPONSIBILITY OF CONTRACTOR.

E.2 COORDINATE WITH COR USE OF MOBILE CELL PHONES AT FACILITY. SOME AREAS OF BUILDING CELL PHONE USE IS PROHIBITED.

F. CONSTRUCTION TOILET FACILITIES

F.1 CONTRACTOR MAY USE TOILETS INSIDE ARTCC BUILDING PROVIDED THAT IT IS KEPT IN A NEAT AND CLEAN MANNER. CONTRACTOR SHALL COORDINATE WITH FAA PERSONNEL LOCATION OF TOILETS PERMITTED FOR USE.

F.2 PORTABLE CHEMICAL TOILETS SHALL BE PROVIDED BY CONTRACTOR AS REQUIRED WITHIN CONSTRUCTION STAGING AREA.

REV	APPROVED DATE	DESCRIPTION	JCN	REDLINE DATE	APVD

DEPARTMENT OF TRANSPORTATION
FEDERAL AVIATION ADMINISTRATION
ATO - TECHNICAL OPERATIONS — WESTERN SERVICE AREA

ARTCC
MAJOR MECHANICAL MODERNIZATION
CONSTRUCTION STAGING PLAN

DENVER — LONGMONT — CO

REVIEWED BY

SUBMITTED BY: PAUL TULENKO — PROJECT ENGINEER
APPROVED BY: CALLEN R. COLLINS — MGR: ENGINEERING - SEATTLE

DO NOT SIGN

DESIGNED: PT
DRAWN: JA
CHECKED:
ISSUED BY: ENGINEERING SERVICES ENROUTE/FSS
DATE:
JCN: 1401893
DRAWING NO: ZDV-1401893-G005
REV:

ISSUED FOR:

DGN: zdv-1401893-g005.dgn
DWG: zdv-1401893-g005.dwg
6/27/2018 10:06:51 AM John CTR Allen

DRAWING PRODUCED ON WSA MICROSTATION SYSTEM

GENERAL NOTES:

A. FOR CONSTRUCTION SEQUENCE SEE SHEET M002.

B. CONTOUR LINES AND ELEVATIONS ARE COMPILED FROM AS-BUILT DRAWINGS. ADD 4200 FEET FOR TRUE ELEVATIONS.

C. LOCATION OF EXISTING IRRIGATION WATER LINES ARE APPROXIMATE AND MUST BE FIELD LOCATED.

SHEET NOTES:

1. DEMOLISH EXISTING CONCRETE SIDEWALK FOR NEW ADDITION SLAB. SEE STRUCTUAL DRAWINGS FOR CONSTTRUCTION DETAIL.
2. PROVIDE NEW 6" THICK CONCRETE SLAB UP TO FLUME WALL. MATCH EXISTING CONCRETE ELEVATION, DETAILS AND COLOR.
3. PROVIDE DRYWELL FOR PUMPHOUSE ROOF DOWNSPOUTS.

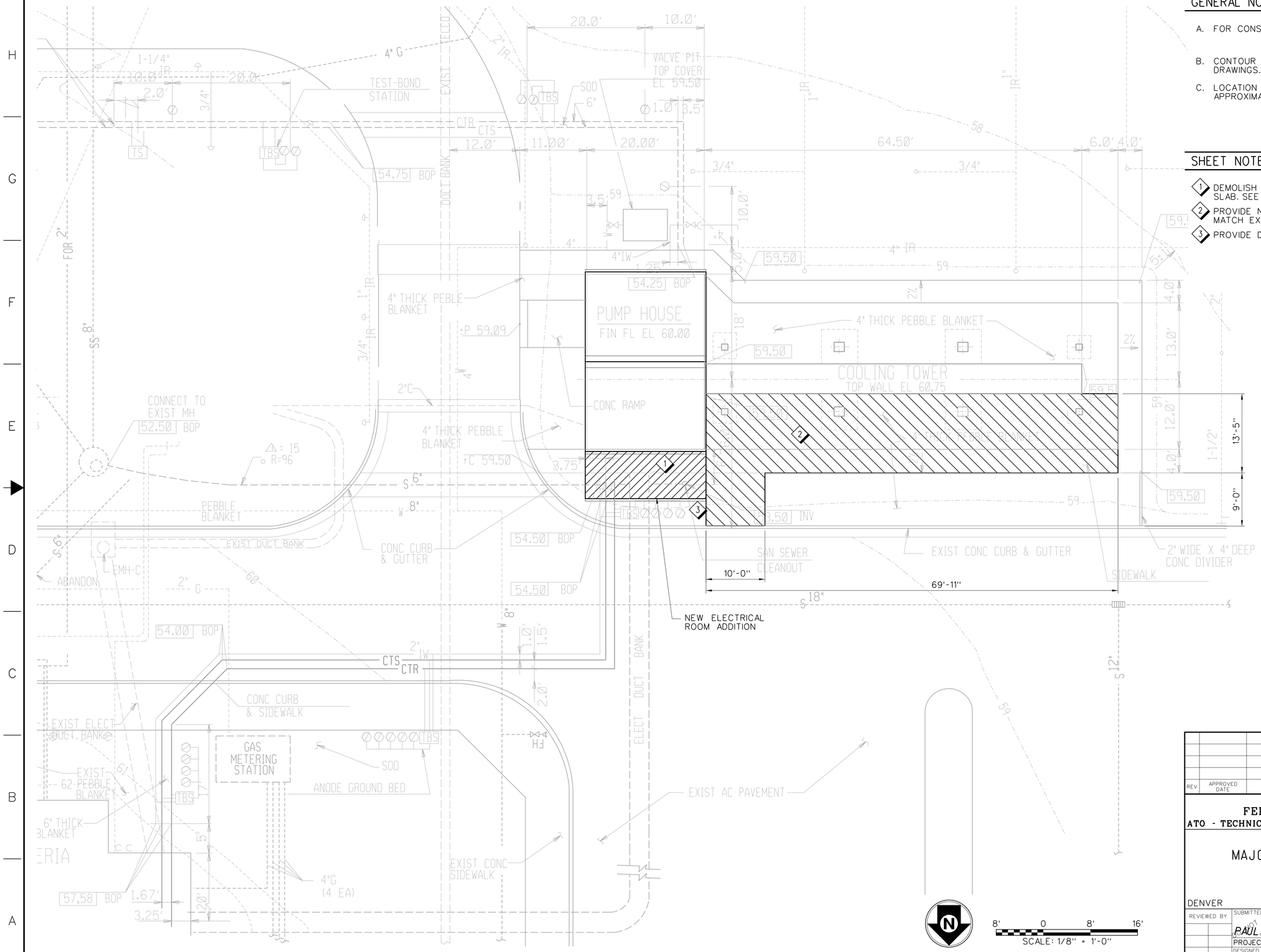

REV	APPROVED DATE	DESCRIPTION	JCN	REDLINE DATE	APVD

DEPARTMENT OF TRANSPORTATION
FEDERAL AVIATION ADMINISTRATION
ATO - TECHNICAL OPERATIONS **WESTERN SERVICE AREA**

ARTCC

MAJOR MECHANICAL MODERNIZATION
CIVIL SITE
NORTH EXCAVATION PLAN

DENVER LONGMONT CO

REVIEWED BY

SUBMITTED BY: PAUL TULENKO — PROJECT ENGINEER

APPROVED BY: CALLEN R. COLLINS — MGR: ENGINEERING - SEATTLE

DO NOT SIGN

DESIGNED

DRAWN: JA

CHECKED

ISSUED BY: ENGINEERING SERVICES ENROUTE/FSS

DATE

JCN: 1401893

DRAWING NO: ZDV-1401893-C001

REV

ISSUED FOR:

zdv-1401893-c001.dgn 6/26/2018 3:39:11 PM John CTR Allen

EDM: zdv-1401893-c001.dgn

DRAWING PRODUCED ON WSA MICROSTATION SYSTEM

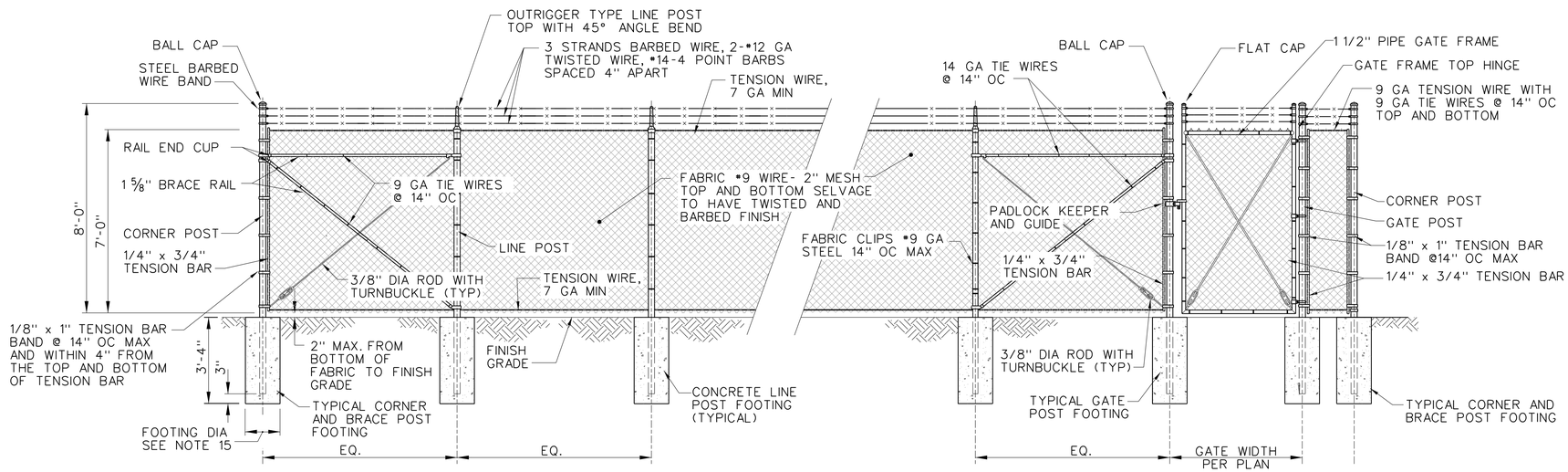

INSIDE ELEVATION CLASS "F" CHAIN LINK-FENCE AND GATES

GENERAL NOTES:

1. THE FENCE DESIGN SHALL COMPLY WITH THE LATEST REVISION OF FAA ORDER 1600.69.
2. ALL STEEL SHALL BE HOT DIPPED GALVANIZED PER ASTM A123 AND F1083.
3. FENCES AND GATES SHALL BE FURNISHED COMPLETE WITH ALL NECESSARY FITTINGS.
4. FOR GATES, SIZES OF PIPES, SAG RODS, TURNBUCKLES AND BRACE RAILS SHALL BE MANUFACTURER'S STANDARD MEETING REQUIREMENTS OF THIS DRAWING.
5. THE BARBED WIRE SHALL BE ANGLED FORTY-FIVE (45) DEGREES OUTWARD FROM THE ENCLOSED AREA.
6. ALL HOLLOW POSTS SHALL BE CAPPED.
7. ALL CONCRETE SHALL OBTAIN 2,500 PSI WITHIN TWENTY-EIGHT (28) DAYS AND USE THREE-FOURTHS (3/4) INCH MAXIMUM SIZE AGGREGATE.
8. INSTALL FENCE FABRIC EXTERIOR TO THE POST, SUPPORTS AND HARDWARE. FENCE FABRIC HEIGHT AT ALL FAA FACILITIES TO BE SEVEN (7) FEET UNLESS OTHERWISE SPECIFIED.
9. GATE SHALL SWING MINIMUM 100 DEGREES EACH WAY. SET GATE CATCH OUTSIDE PLOT UNLESS DIRECTED OTHERWISE BY RESIDENT ENGINEER.
10. INSTALL LATCH FORK, CATCHER, PADLOCK KEEPER, GUIDE, ETC. ON GATE POST.
11. CORNER POSTS SHALL BE USED AT ANY ANGLE OF FENCE ALIGNMENT IN EXCESS OF TEN (10) DEGREES.
12. PEEN BOLTS, SCORE OR SPOT WELD THREADS TO PREVENT REMOVAL OF NUTS.
13. OUTRIGGER BRACKETS SHALL BE TWELVE (12) GAUGE PRESSED STEEL AND PERMANENTLY FASTENED TO POST. THE BRACKETS SHALL BE CAPABLE OF WITHSTANDING 250 POUNDS OF VERTICAL FORCE WITHOUT SAGGING OR BREAKING.
14. TOP RAILS SHALL NOT BE INSTALLED.
15. THE GATE AND FENCE POST FOOTING SHALL BE 4 TIMES THE DIAMETER OF THE GATE OR FENCE POST.
16. FENCE FABRIC MUST BE ATTACHED TO THE EXTERIOR SIDE OF LINE POSTS USING 9-GAUGE STEEL TIES SPACED NOT MORE THAN 14 INCHES APART, WITH TIES MOUNTED WITHIN 4 INCHES OF THE TOP AND BOTTOM OF THE FABRIC. TIES MUST BE WRAPPED 360 DEGREES AROUND POSTS AND TWISTED A MINIMUM OF THREE TURNS AND BENT DOWN ON THE PROTECTED SIDE OF FENCE.

FENCE POST SPECIFICATIONS

GATE POSTS				CORNER POSTS		LINE POSTS	
POST DIAMETER	WEIGHT*	GATE OPENING SINGLE. INCLUSIVE	GATE OPENING DOUBLE. INCLUSIVE	POST DIAMETER	WEIGHT*	POST DIAMETER	WEIGHT*
MATCH EXIST	MATCH EXIST	MATCH EXIST	MATCH EXIST	3" O.D.	4.64 LBS/FT	2.375" O.D.	3.65 LBS/FT
				* WEIGHT IS UNGALVANIZED			

REFERENCE DRAWINGS:

NMSD-D-MISC-Y002	CLASS F CHAIN LINK FENCE CANTILEVER GATE DETAILS
NMSD-D-MISC-Y003	LOW LIGHTNING STRIKE RISK LOCATION FENCE LAYOUT AND GROUNDING PLAN
NMSD-D-MISC-Y004	LOW LIGHTNING STRIKE RISK LOCATION FENCE & GATE GROUNDING DETAILS
NMSD-D-MISC-Y005	HIGH LIGHTNING STRIKE RISK LOCATION FENCE LAYOUT AND GROUNDING PLAN
NMSD-D-MISC-Y006	HIGH LIGHTNING STRIKE RISK LOCATION FENCE & GATE GROUNDING DETAILS
NMSD-D-MISC-Y007	CLASS F CHAIN LINK FENCE POWERED CANTILEVER GATE GROUNDING DETAILS

REV	APPROVED DATE	DESCRIPTION	JCN	REDLINE DATE	APVD

DEPARTMENT OF TRANSPORTATION
FEDERAL AVIATION ADMINISTRATION
ATO - TECHNICAL OPERATIONS WESTERN SERVICE AREA

ARTCC

MAJOR MECHANICAL MODERNIZATION
COOLING TOWER FENCING
ELEVATIONS AND DETAILS

DENVER LONGMONT CO

REVIEWED BY
SUBMITTED BY: PAUL TULENKO
APPROVED BY: CALLEN R. COLLINS
PROJECT ENGINEER
MGR: ENGINEERING - SEATTLE
DESIGNED
DRAWN JA
CHECKED
ISSUED BY ENGINEERING SERVICES ENROUTE/FSS
DATE
JCN 1401893
DRAWING NO ZDV-1401893-C002
REV

ISSUED FOR:

DRAWING PRODUCED ON WSA MICROSTATION SYSTEM

zdv-1401893-c002.dgn 6/29/2018 10:31:42 AM John CTR Allen

EDM: zdv-1401893-c002.dgn

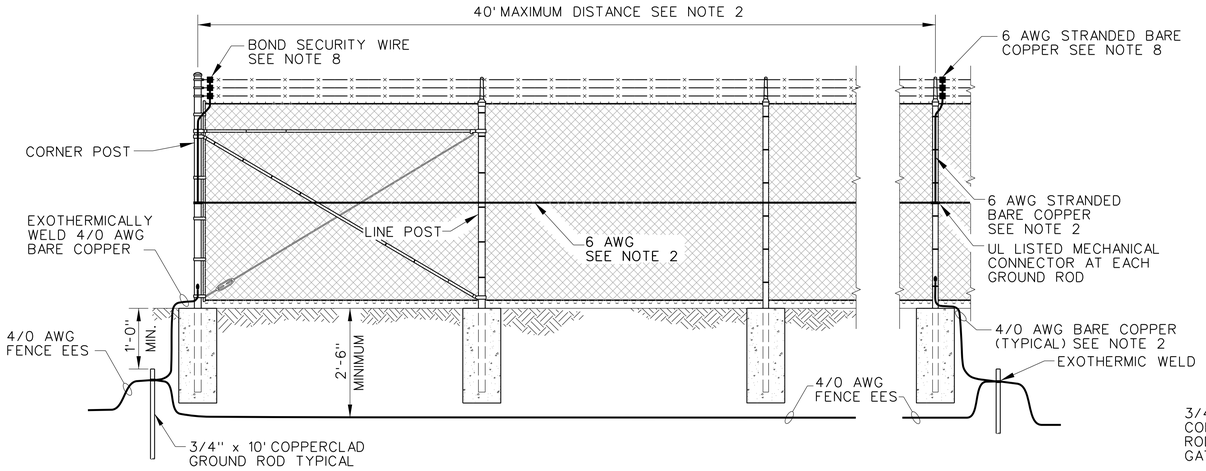

END OR CORNER POST

NOT TO SCALE

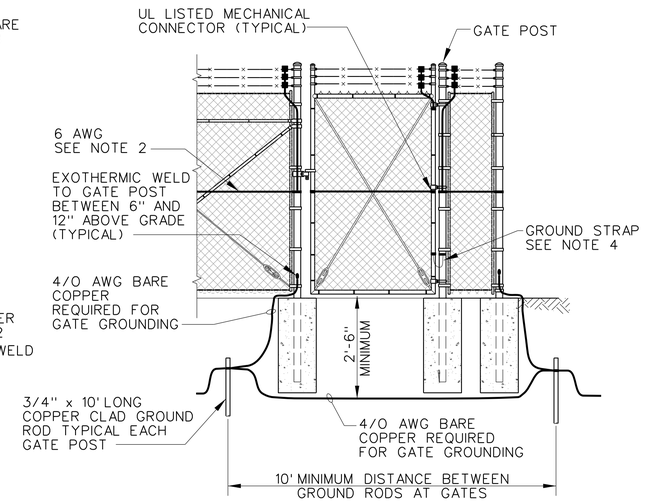

SINGLE SWING GATE

NOT TO SCALE

INSIDE ELEVATION CLASS "F" CHAIN LINK-FENCE AND GATES

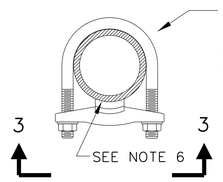

GROUND CONNECTOR

NOT TO SCALE

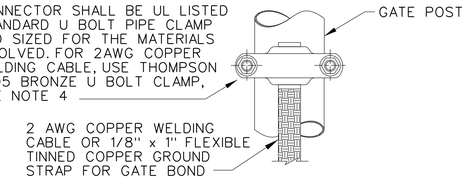

VIEW 3

NOT TO SCALE

GENERAL NOTES:

1. ALL FENCE AND GATE GROUNDING SHALL COMPLY WITH THE LATEST REVISION OF FAA-STD-019.
2. A HORIZONTAL BARE 6 AWG STRANDED, TINNED COPPER CONDUCTOR SHALL BE THREADED THROUGH THE FENCE FABRIC AT MID LEVEL AND SHALL BE MECHANICALLY BONDED TO THE FENCE POST AT INTERVALS NOT GREATER THAN 40'. THE FENCE POST SHALL BE BONDED TO A GROUND ROD WITH A BARE 4/0 AWG CONDUCTOR USING EXOTHERMIC WELD. THE GROUND ROD SHALL BE EXOTHERMICALLY WELDED TO THE FENCE EES. FOR SWING GATES, THE HORIZONTAL BARE AWG CONDUCTOR IN THE FENCE FABRIC SHALL CONTINUE TO AND BE THREADED THROUGH THE GATE FABRIC AND MECHANICALLY BONDED TO THE VERTICAL GATE RAILS.
3. TOP OF 3/4" x 10' COPPER CLAD GROUND ROD SHALL BE 1' MINIMUM BELOW GRADE.
4. ALL SWING GATES SHALL HAVE A 1" x 1/8" FLEXIBLE TINNED COPPER BOND STRAP OR AN INSULATED 2 1/8" FLEXIBLE TINNED COPPER BOND STRAP OR AN INSULATED 2 AWG FLEXIBLE WELDING COPPER CABLE THAT IS BONDED TO THE ADJACENT POST (EXOTHERMIC WELDING IS RECOMMENDED). THE POST AT EACH SIDE OF THE GATE SHALL BE BONDED TO GROUND RODS WITH A 4/0 AWG BONDING JUMPER. THE JUMPER SHALL BE EXOTHERMICALLY WELDED AT A HEIGHT BETWEEN 6" AND 12" ABOVE GRADE OR AT ANOTHER SUITABLE LOCATION. THE BONDING STRAP TO THE POST SHALL BE INSTALLED SO AS NOT TO LIMIT FULL MOTION OF THE GATE.
5. SCRAPE GALVANIZING OFF FENCE POST. AFTER WELDING, PAINT AREA WITH COLD GALVANIZING PAINT.
6. SCRAPE GALVANIZING OFF ANY PART OF THE FENCE SYSTEM WHERE A GROUNDING CONDUCTOR IS BONDED AND REPAINT AREA WITH COLD GALVANIZING PAINT.
7. ALL 4/0 AWG SHALL BE STRANDED BARE COPPER CONDUCTOR.
8. BOND ACROSS ALL TERMINATIONS IN THE SECURITY WIRE USING A 6 AWG STRANDED, TINNED COPPER CONDUCTOR AND UL LISTED BONDING CONNECTORS. BOND THE SECURITY WIRES TO THE FENCE POST AT 40' INTERVALS WITH A 6 AWG STRANDED, TINNED COPPER CONDUCTOR AND UL LISTED BONDING CONNECTORS.
9. WHERE A GROUNDING ELECTRODE SYSTEM RESISTANCE OF 10 OHMS OR LESS IS UNATTAINABLE, GROUND ENHANCEMENTS LISTED IN FAA-STD-019 SHALL BE USED TO ACHIEVE THE 10 OHM REQUIREMENT.

REV	APPROVED DATE	DESCRIPTION	JCN	REDLINE DATE	APVD

DEPARTMENT OF TRANSPORTATION
FEDERAL AVIATION ADMINISTRATION
ATO - TECHNICAL OPERATIONS — WESTERN SERVICE AREA

ARTCC

MAJOR MECHANICAL MODERNIZATION
COOLING TOWER FENCING
TYPICAL FENCE GROUNDING DETAILS

DENVER — LONGMONT — CO

REVIEWED BY

SUBMITTED BY: PAUL TULENKO — PROJECT ENGINEER

APPROVED BY: CALLEN R. COLLINS — MGR: ENGINEERING - SEATTLE

DO NOT SIGN

DESIGNED | DRAWN: JA | CHECKED

ISSUED BY: ENGINEERING SERVICES ENROUTE/FSS

DATE | JCN: 1401893

DRAWING NO: ZDV-1401893-C003 | REV

ISSUED FOR:

DRAWING PRODUCED ON WSA MICROSTATION SYSTEM

rd-1401893-c003.dgn 6/26/2018 3:31:32 PM John CTR Allen

EDM: zdv-1401893-c003.dgn

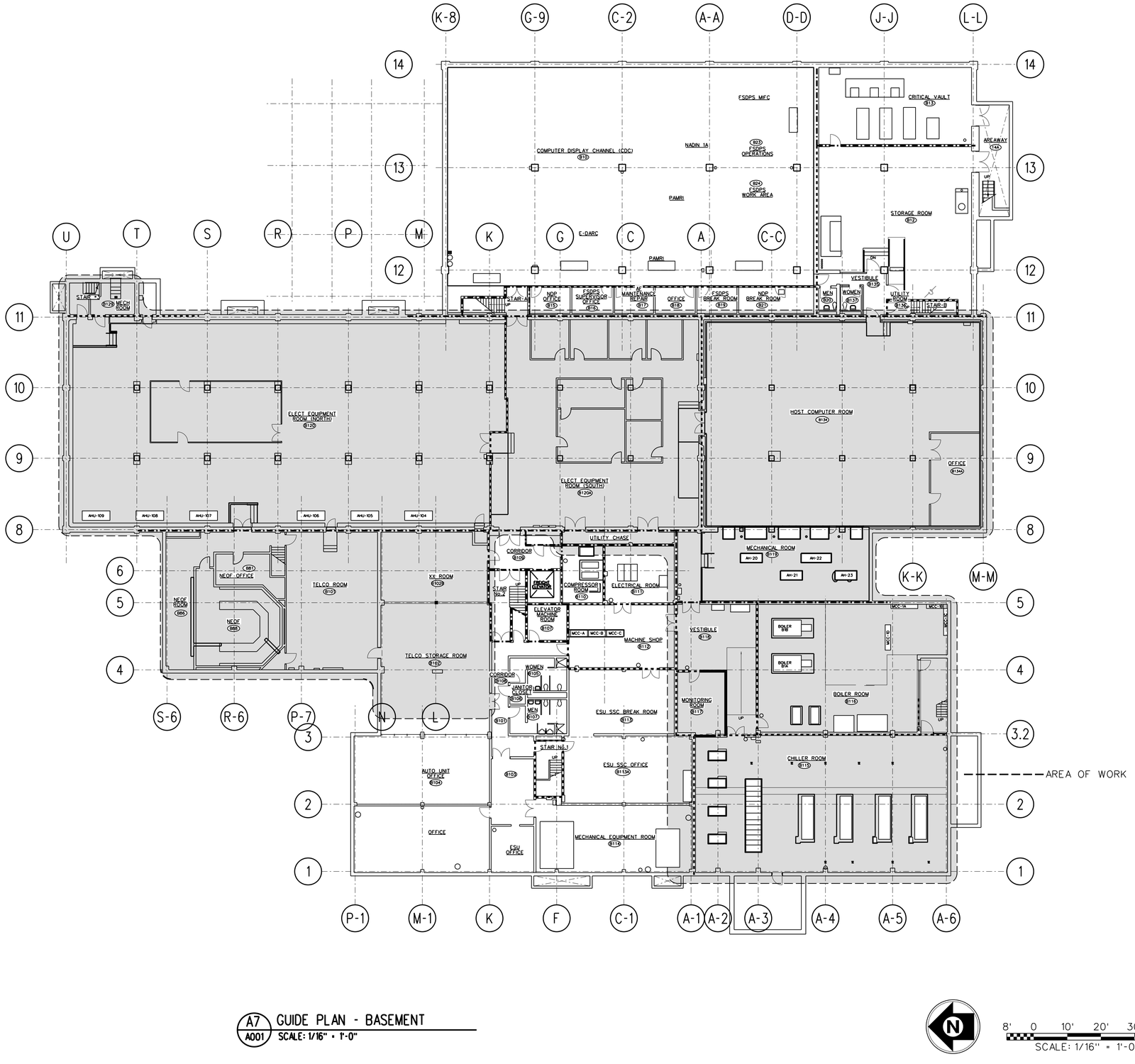

A7 / A001 GUIDE PLAN - BASEMENT
SCALE: 1/16" = 1'-0"

8' 0 10' 20' 30' 40'
SCALE: 1/16" = 1'-0"

GENERAL NOTES:

A. FIRST FLOOR SLAB ABOVE BOILER AND CHILLER ROOMS SHALL BE A 1-HOUR FIRE RATED CONSTRUCTION.

B. UTILITY CHASE WALLS ARE 2-HOUR FIRE RATED CONSTRUCTION.

C. CRITICAL VAULT ROOM B111, CONCRETE CEILING, IS 2-HOUR FIRE RATED CONSTRUCTION.

D. CONTROL AND ADMINISTRATION WING FIRST FLOOR CONCRETE WAFFLE SLAB HAS ONE-HOUR FIRE RATING PER IBC 2018 TYPE II A CONSTRUCTION. PROVIDE SMOKE AND FIRE STOP FLOOR PENETRATIONS WITH A 1-HOUR FIRE RATED ASSEMBLY.

E. ADMINISTRATION WING SMOKE AND FIRE STOP FLOOR PENETRATIONS TO BE 1-HOUR FIRE RATED ASSEMBLIES PER IBC 2018 TYPE II B CONSTRUCTION.

F. THIS DRAWING ILLUSTRATES THE EXTENT AND LAYOUT OF FIRE-RATED PARTITIONS AS REQUIRED BY CODE AND FAA STANDARDS/REQUIREMENTS. THIS DRAWING DOES NOT REPRESENT THAT THESE EXISTING PARTITIONS, IN FACT, CURRENTLY PROVIDE THE REQUIRED FIRE RATING, BUT ONLY THAT THE PARTITIONS AS SHOWN SHOULD BE RATED AS INDICATED.

G. UNLESS SPECIFICALLY INDICATED OTHERWISE IN THIS DRAWING PACKAGE, THIS PROJECT SCOPE DOES NOT INCLUDE REPLACING OR UPGRADING ANY OF THESE EXISTING PARTITIONS THAT DO NOT CURRENTLY PROVIDE THE REQUIRED FIRE RATING. THIS PROJECT SCOPE INCLUDES:

FIRE AND SMOKE-STOPPING TO COMPLY WITH INDICATED RATINGS. THE INDICATED RATINGS AT NEW PENETRATIONS IN THESE PARTITIONS MADE BY THE WORK OF THIS PROJECT; FIRE AND SMOKE-STOPPING TO COMPLY WITH THE INDICATED RATINGS AT NEW OPENINGS/HOLES MADE BY THE WORK OF THIS PROJECT (REMOVALS OF EXISTING ITEMS LEAVING OPENINGS/HOLES).

LEGEND:

2-HOUR RATED WALL

1-HOUR RATED WALL

AREA OF WORK

KEY PLAN:

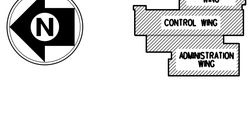

REV	APPROVED DATE	DESCRIPTION	JCN	REDLINE DATE	APVD

DEPARTMENT OF TRANSPORTATION
FEDERAL AVIATION ADMINISTRATION
ATO - TECHNICAL OPERATIONS WESTERN SERVICE AREA

ARTCC
MAJOR MECHANICAL MODERNIZATION

GUIDE PLAN - BASEMENT

DENVER LONGMONT CO

REVIEWED BY

SUBMITTED BY: PAUL TULENKO — PROJECT ENGINEER
APPROVED BY: CALLEN R. COLLINS — MGR: ENGINEERING - SEATTLE

DO NOT SIGN

DESIGNED RC
DRAWN JA
CHECKED

ISSUED BY: ENGINEERING SERVICES ENROUTE/FSS

DATE
JCN 1401893
DRAWING NO ZDV-1401893-A001
REV

ISSUED FOR:

DRAWING PRODUCED ON WSA MICROSTATION SYSTEM

zdv-1401893-a001.dgn 7/2/2018 4:09:38 PM John (CTR) Allen

EDM: zdv-1401893-a001.dgn

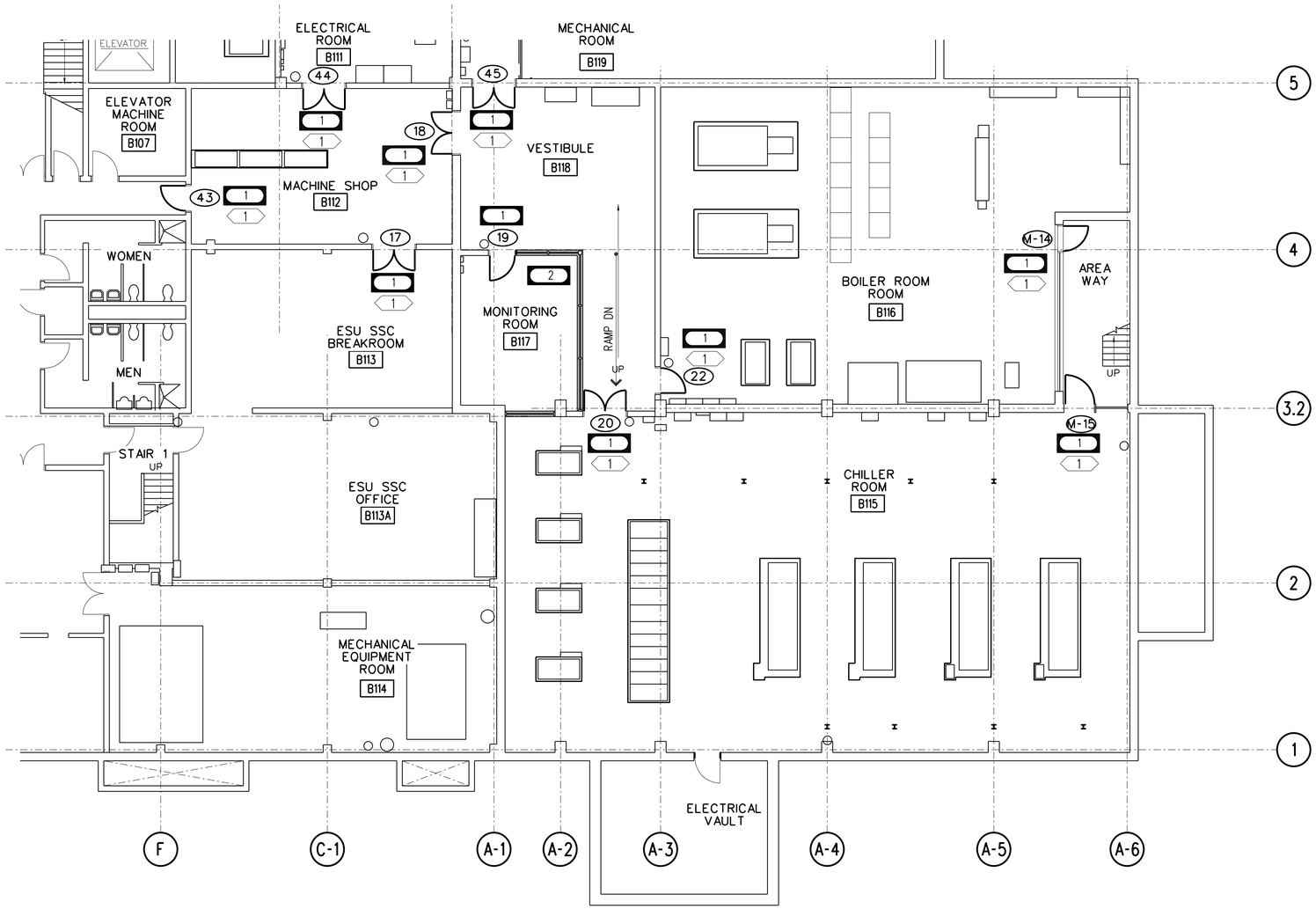

A8 / A011 BASEMENT ROOMS B112/B115/B116/B117/B118 - HAZMAT ABATEMENT

SCALE: 1/8" = 1'-0"

8' 0 8' 16'

SCALE: 1/8" = 1'-0"

HAZMAT GENERAL NOTES:

A. LEAD COATED COMPONENTS (LCC) ARE PRESENT IN THE PROJECT AREA. ABATE IN ACCORDANCE WITH DIVISION 2 SPECIFICATIONS OF THE CWB PROJECT.

B. HAZMAT DRAWINGS SHOW LOCATIONS ONLY. VERIFY QUANTITIES BEFORE BEGINNING WORK. COORDINATE WITH DEMOLITION.

C. CONTRACTOR TO COORDINATE WITH COR TO COMPLETE FORM 3900-18 FAA PRE-CONSTRUCTION ENVIRONMENTAL AND OCCUPATIONAL SAFETY AND HEALTH CHECKLIST.

D. COORDINATE PHASING OF HAZARDOUS MATERIAL REMOVAL WITH COR AND DEMOLITION DRAWINGS.

HAZMAT KEY NOTES:

ACM AND LCC

KEY 1 - ACM: HOLLOW METAL DOORS (PRESUMED)
2 - GLAZING GASKET/CAULKING - PRESUMED

LCC

KEY 1 - LCC: HOLLOW METAL DOORS (PRESUMED)

KEY PLAN:

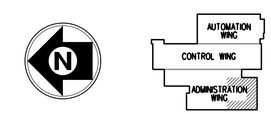

REV	APPROVED DATE	DESCRIPTION	JCN	REDLINE DATE	APVD

DEPARTMENT OF TRANSPORTATION
FEDERAL AVIATION ADMINISTRATION
ATO - TECHNICAL OPERATIONS WESTERN SERVICE AREA

ARTCC

MAJOR MECHANICAL MODERNIZATION
BASEMENT ROOM B112/B115/B116/B117/B118
HAZMAT ABATEMENT PLAN

DENVER LONGMONT CO

REVIEWED BY

SUBMITTED BY: PAUL TULENKO — PROJECT ENGINEER

APPROVED BY: CALLEN R. COLLINS — MGR: ENGINEERING - SEATTLE

DO NOT SIGN

DESIGNED RC
DRAWN JA
CHECKED

ISSUED BY: ENGINEERING SERVICES ENROUTE/FSS

DATE
JCN 1401893
DRAWING NO ZDV-1401893-A011
REV

ISSUED FOR:

DRAWING PRODUCED ON WSA MICROSTATION SYSTEM

rsb-1401893-a011.dgn 6/28/2018 10:32:25 AM John CTR Allen

CDM: zdv-1401893-a011.dgn

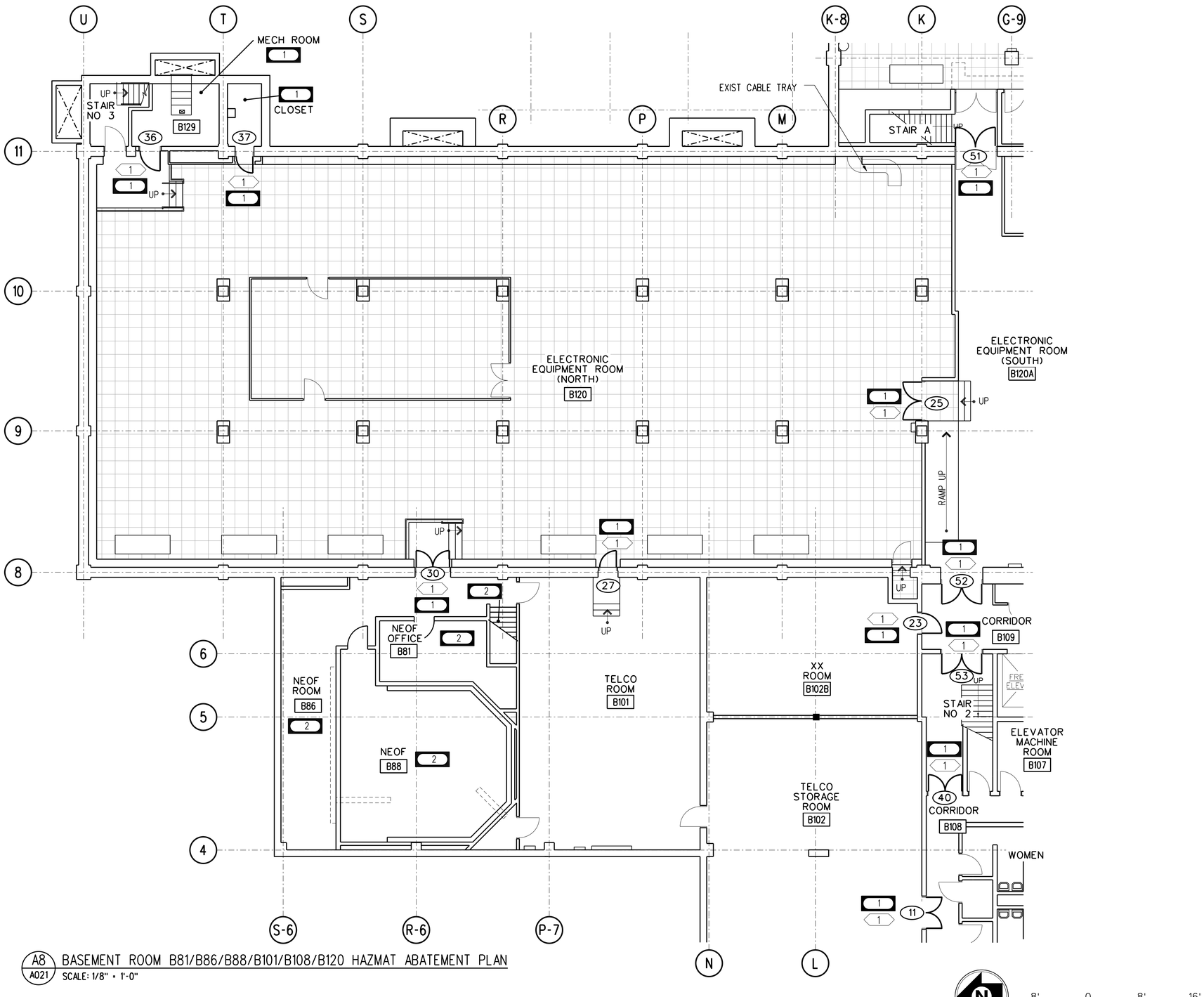

A8 / A021 BASEMENT ROOM B81/B86/B88/B101/B108/B120 HAZMAT ABATEMENT PLAN

SCALE: 1/8" = 1'-0"

HAZMAT GENERAL NOTES:

A. ASBESTOS CONTAINING MATERIAL (ACM) AND LEAD COATED COMPONENTS (LCC) ARE PRESENT IN THE PROJECT AREA. ABATE IN ACCORDANCE WITH DIVISION 2 SPECIFICATIONS.

B. HAZMAT DRAWINGS SHOW LOCATIONS ONLY. VERIFY QUANTITIES BEFORE BEGINNING WORK. COORDINATE WITH DEMOLITION.

C. PROVIDE FAA ONE CLEAN HEPA VACUUM WITH UNUSED HEPA FILTER FOR USE DURING ABATEMENT ACTIVITIES.

D. THE FAA SHALL PROVIDE INDEPENDENT THIRD PARTY MONITORING, SAMPLING AND OVERSIGHT DURING THE ABATEMENT AND CLEAN-UP. MONITORING WILL INCLUDE DAILY OVERSIGHT OF THE CONTRACTOR AND WILL INCLUDE ROUTINE PROJECT COMPLIANCE AND FINAL CLEARANCE SAMPLING. THE CONTRACTOR SHALL BE RESPONSIBLE FOR OSHA AND WORKER PROTECTION MONITORING.

HAZMAT KEY NOTES:

ACM

KEY 1 - ACM: HOLLOW METAL DOORS (PRESUMED)
2 - ACM: FLOOR TILE AND MASTIC, BASE AND MASTIC, TRENCH COVER AND MASTIC

LCC

KEY 1 - LCC: HOLLOW METAL DOORS (PRESUMED)

KEY PLAN:

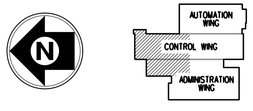

REV	APPROVED DATE	DESCRIPTION	JCN	REDLINE DATE	APVD

DEPARTMENT OF TRANSPORTATION
FEDERAL AVIATION ADMINISTRATION
ATO - TECHNICAL OPERATIONS — WESTERN SERVICE AREA

ARTCC

MAJOR MECHANICAL MODERNIZATION
BASEMENT ROOM B81/B86/B88/B101/B108/B120
HAZMAT ABATEMENT PLAN

DENVER — LONGMONT — CO

REVIEWED BY

SUBMITTED BY: PAUL TULENKO — PROJECT ENGINEER

APPROVED BY: CALLEN R. COLLINS — MGR: ENGINEERING - SEATTLE

DO NOT SIGN

DESIGNED: RC
DRAWN: JA
CHECKED:

ISSUED BY: ENGINEERING SERVICES ENROUTE/FSS

DATE:
JCN: 1401893
DRAWING NO: ZDV-1401893-A021
REV:

ISSUED FOR:

DRAWING PRODUCED ON WSA MICROSTATION SYSTEM

EDM: zdv-1401893-a021.dgn

rid=1401893-a021.dgn 6/26/2018 4:27:46 PM John CTR Allen

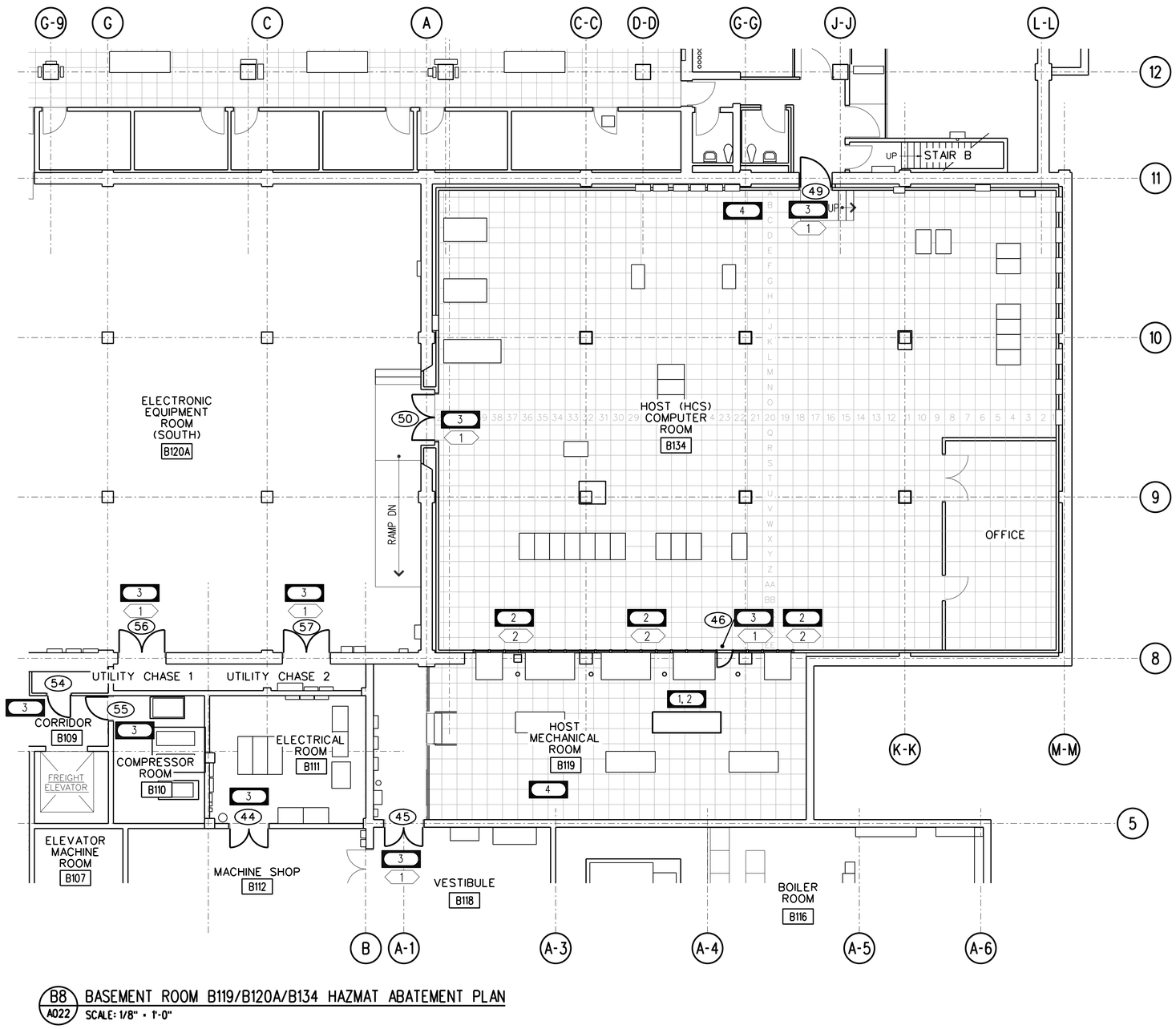

B8 / A022 BASEMENT ROOM B119/B120A/B134 HAZMAT ABATEMENT PLAN

SCALE: 1/8" = 1'-0"

HAZMAT GENERAL NOTES:

A. ASBESTOS CONTAINING MATERIAL (ACM) AND LEAD COATED COMPONENTS (LCC) ARE PRESENT IN THE PROJECT AREA. ABATE IN ACCORDANCE WITH DIVISION 2 SPECIFICATIONS.

B. HAZMAT DRAWINGS SHOW LOCATIONS AND APPROXIMATE QUANTITIES ONLY. VERIFY QUANTITIES BEFORE BEGINNING WORK. COORDINATE WITH DEMOLITION.

C. PROVIDE FAA ONE CLEAN HEPA VACUUM WITH UNUSED HEPA FILTER FOR USE DURING ABATEMENT ACTIVITIES.

D. TEST AND ABATE FOR MOLD NEAR DRINKING FOUNTAIN.

E. TEST AND ABATE FOR MOLD BEHIND ACOUSTIC WALL PANELS IN ROOM B119 AND B134.

HAZMAT KEY NOTES:

ACM

KEY
1 - ACM: PIPE INSULATION SHOES (5 EA)
2 - ACM: DUCT INSULATION (ON SEAMS)
3 - ACM: HOLLOW METAL DOORS (PRESUMED)
4 - MOLD: BEHIND ACOUSTIC WALL PANELS

LCC

KEY
1 - LCC: HOLLOW METAL DOORS (PRESUMED)
2 - LCC: METAL LOUVERS (PRESUMED)

KEY PLAN:

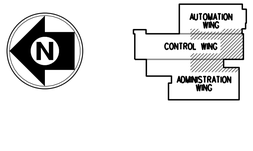

REV	APPROVED DATE	DESCRIPTION	JCN	REDLINE DATE	APVD

DEPARTMENT OF TRANSPORTATION
FEDERAL AVIATION ADMINISTRATION
ATO - TECHNICAL OPERATIONS WESTERN SERVICE AREA

ARTCC

MAJOR MECHANICAL MODERNIZATION
BASEMENT ROOM B119/B120A/B134
HAZMAT ABATEMENT PLAN

DENVER LONGMONT CO

REVIEWED BY

SUBMITTED BY: PAUL TULENKO — PROJECT ENGINEER

APPROVED BY: CALLEN R. COLLINS — MGR: ENGINEERING - SEATTLE

DO NOT SIGN

DESIGNED RC
DRAWN JA
CHECKED

ISSUED BY: ENGINEERING SERVICES ENROUTE/FSS

DATE
JCN 1401893
DRAWING NO ZDV-1401893-A022
REV

ISSUED FOR:

job-1401893-a022.dgn 6/26/2018 4:28:25 PM John CTR Allen

EDM: zdv-1401893-a022.dgn

DRAWING PRODUCED ON WSA MICROSTATION SYSTEM

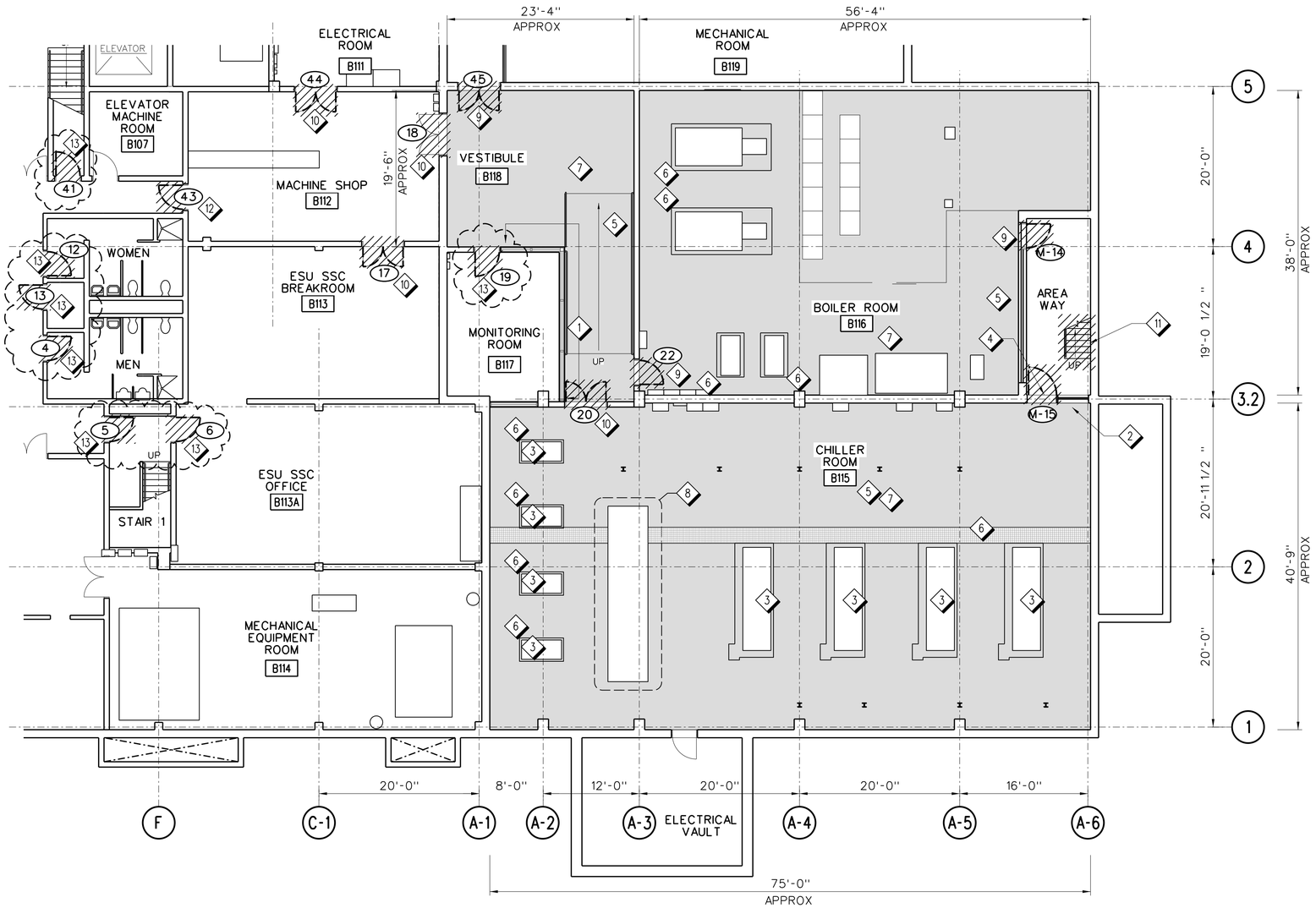

C8 / A101 BASEMENT ROOM B112/B115/B116/B118 DEMOLITION PLAN

SCALE: 1/8" = 1'-0"

CLOUD DENOTES BID OPTION SCOPE OF WORK

8' 0 8' 16'

SCALE: 1/8" = 1'-0"

GENERAL SHEET NOTES:

A. PROTECT EXISTING OPERATIONAL AND NON-OPERATIONAL EQUIPMENT FROM DAMAGE OF ANY SORT. EQUIPMENT IS CRITICAL TO THE OPERATION AND FUNCTION OF THIS FACILITY.

B. SEE MECHANICAL AND ELECTRICAL FOR EQUIPMENT LOCATIONS.

C. REMOVE FIRE EXTINGUISHERS AND STORE FOR REINSTALLATION OR REPLACEMENT.

SHEET NOTES:

1. DEMOLISH EXISTING FRAME AND GLAZING IN MONITORING ROOM B117.
2. DEMOLISH CONCRETE CURB IF REQUIRED TO REMOVE CHILLERS.
3. 6" HIGH CONCRETE MAINTENANCE PAD FOR MECHANICAL EQUIPMENT TO REMAIN. REFER TO MECHANICAL FOR SIZE OF PADS REQUIRED. IF LARGER PADS ARE REQUIRED, EXPAND EXISTING.
4. REMOVE FOR SALVAGE AND REINSTALLATION DOOR AND LOUVER ASSEMBLY TO ALLOW FOR THE WORK, COORDINATE REMOVAL WITH MECH AND COR. COORDINATE SECURITY SYSTEMS DISCONNECTION AND PRECAUTIONS WITH SSDI CONTRACTOR RETAINED BY GENERAL CONTRACTOR AS PART OF WORK.
5. DEMOLISH VCT FLOORING AND ADHESIVES, WALL BASE AND ADHESIVES, EQUIPMENT PAD BASE AND ADHESIVES, THRESHOLDS, TRANSITIONS AND ANCHORS, AND TRIM AT TRENCHES. DEMOLISH ALL COATINGS ON FLOOR TO BARE CONCRETE. FAA TOOL CABINETS, LOCKERS, FURNITURE AND EQUIPMENT SHALL BE MOVED WITHIN THE ROOM BY THE CONTRACTOR AS NEEDED TO PERFORM THE WORK AND MOVED BACK IN PLACE, IN COORDINATION WITH THE COR.
6. PROTECT EXISTING FLOOR DRAINS FROM INFILTRATION OF DEBRIS AND DAMAGE. DEMOLISH EXISTING TRENCH COVERS.
7. REPAIR CONCRETE SUBSTRATE INCLUDING ALL CRACKS, HOLES AND SPALLED AREAS, AND LEVEL ALL CONCRETE FLOOR SURFACES. THOROUGHLY PREPARE THE CONCRETE SUBSTRATE IN ACCORDANCE WITH MANUFACTURERS RECOMMENDATIONS AND REQUIREMENTS TO RECEIVE FLOOR FINISHES AND TO MEET APPLICABLE WARRANTY REQUIREMENTS. INSTALL NEW RUBBER COVE BASE ON WALLS. FAA TOOL CABINETS, LOCKERS, FURNITURE AND EQUIPMENT SHALL BE MOVED WITHIN THE ROOM BY THE CONTRACTOR AS NEEDED TO PERFORM THE WORK AND MOVED BACK IN PLACE, IN COORDINATION WITH THE COR.
8. PROVIDE DUST PROOF PARTITION AROUND ESSENTIAL SWITCHGEAR TO PROTECT FROM DAMAGE. DUST PROOF PARTITION SHALL ALLOW ACCESS TO SWITCHGEAR EQUIPMENT FOR MAINTENANCE PERSONNEL. HEAT LOAD TO BE CONSIDERED IN CONSTRUCTION OF DUST PROOF PARTITION.
9. DEMOLISH DOOR AND DOOR HARDWARE. FRAMES TO REMAIN. COORDINATE AND REMOVE SECURITY COMPONENTS AS REQUIRED.
10. DEMOLISH DOOR, FRAMES AND DOOR HARDWARE.
11. REMOVE FOR SALVAGE AND REINSTALLATION EXISTING STEEL STAIRS, RAILS AND LANDING FOR EQUIPMENT ACCESS.
12. DEMOLISH DOOR, FRAMES AND DOOR HARDWARE. COORDINATE AND REMOVE SECURITY COMPONENTS AS REQUIRED.
13. BID OPTION 1 - DEMOLISH DOOR AND DOOR HARDWARE, FRAMES TO REMAIN, COORDINATE AND REMOVE SECURITY COMPONENTS AS REQUIRED.

KEY PLAN:

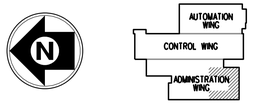

REV	APPROVED DATE	DESCRIPTION	JCN	REDLINE DATE	APVD

DEPARTMENT OF TRANSPORTATION
FEDERAL AVIATION ADMINISTRATION
ATO - TECHNICAL OPERATIONS WESTERN SERVICE AREA

ARTCC

MAJOR MECHANICAL MODERNIZATION BASEMENT ROOM B112/B115/B116/B118 DEMOLITION PLAN

DENVER LONGMONT CO

REVIEWED BY

SUBMITTED BY: PAUL TULENKO — PROJECT ENGINEER

APPROVED BY: CALLEN R. COLLINS — MGR: ENGINEERING - SEATTLE

DO NOT SIGN

DESIGNED RC
DRAWN JA
CHECKED

ISSUED BY: ENGINEERING SERVICES ENROUTE/FSS

DATE
JCN 1401893
DRAWING NO ZDV-1401893-A101
REV

ISSUED FOR:

zdv-1401893-a101.dgn 7/10/2018 4:53:29 PM John C?R Allen

EDM: zdv-1401893-a101.dgn

DRAWING PRODUCED ON WSA MICROSTATION SYSTEM

SHEET NOTES:

1. CONCRETE WALKWAY OR PORTIONS OF WALKWAY MAY BE DEMOLISHED AS NECESSARY FOR FENCE DEMOLITION.
2. DEMOLISH DOOR AND DOOR HARDWARE. FRAMES TO REMAIN. COORDINATE AND REMOVE SECURITY COMPONENTS AS REQUIRED.
3. REMOVE LOUVER ON NORTH SIDE OF BUILDING AND STORE FOR REINSTALLATION.

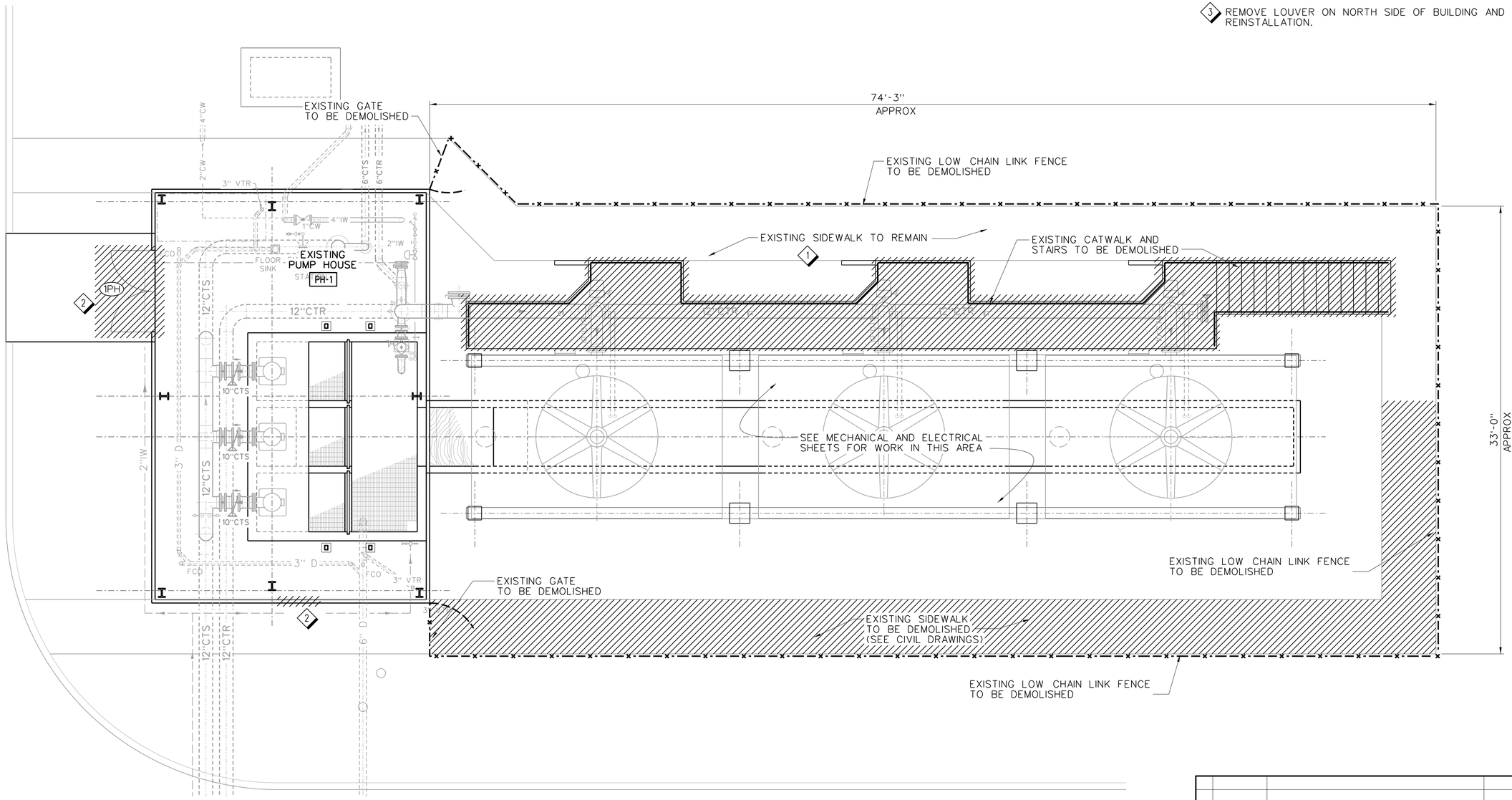

C7 / A102 COOLING TOWER PUMP HOUSE DEMOLITION PLAN
SCALE: 1/4" = 1'-0"

4' 0 4' 8'
SCALE: 1/4" = 1'-0"

REV	APPROVED DATE	DESCRIPTION	JCN	REDLINE DATE	APVD

DEPARTMENT OF TRANSPORTATION
FEDERAL AVIATION ADMINISTRATION
ATO - TECHNICAL OPERATIONS **WESTERN SERVICE AREA**

ARTCC

MAJOR MECHANICAL MODERNIZATION
COOLING TOWER AND PUMP HOUSE
DEMOLITION PLAN

DENVER LONGMONT CO

REVIEWED BY

SUBMITTED BY: PAUL TULENKO — PROJECT ENGINEER

APPROVED BY: CALLEN R. COLLINS — MGR: ENGINEERING - SEATTLE

DO NOT SIGN

DESIGNED RC
DRAWN JA
CHECKED

ISSUED BY: ENGINEERING SERVICES ENROUTE/FSS

DATE
JCN 1401893
DRAWING NO ZDV-1401893-A102
REV

ISSUED FOR:

DRAWING PRODUCED ON WSA MICROSTATION SYSTEM

rnb-1401893-a102.dgn 6/26/2018 11:38:35 AM John CTR Allen

EDM: zdv-1401893-a102.dgn

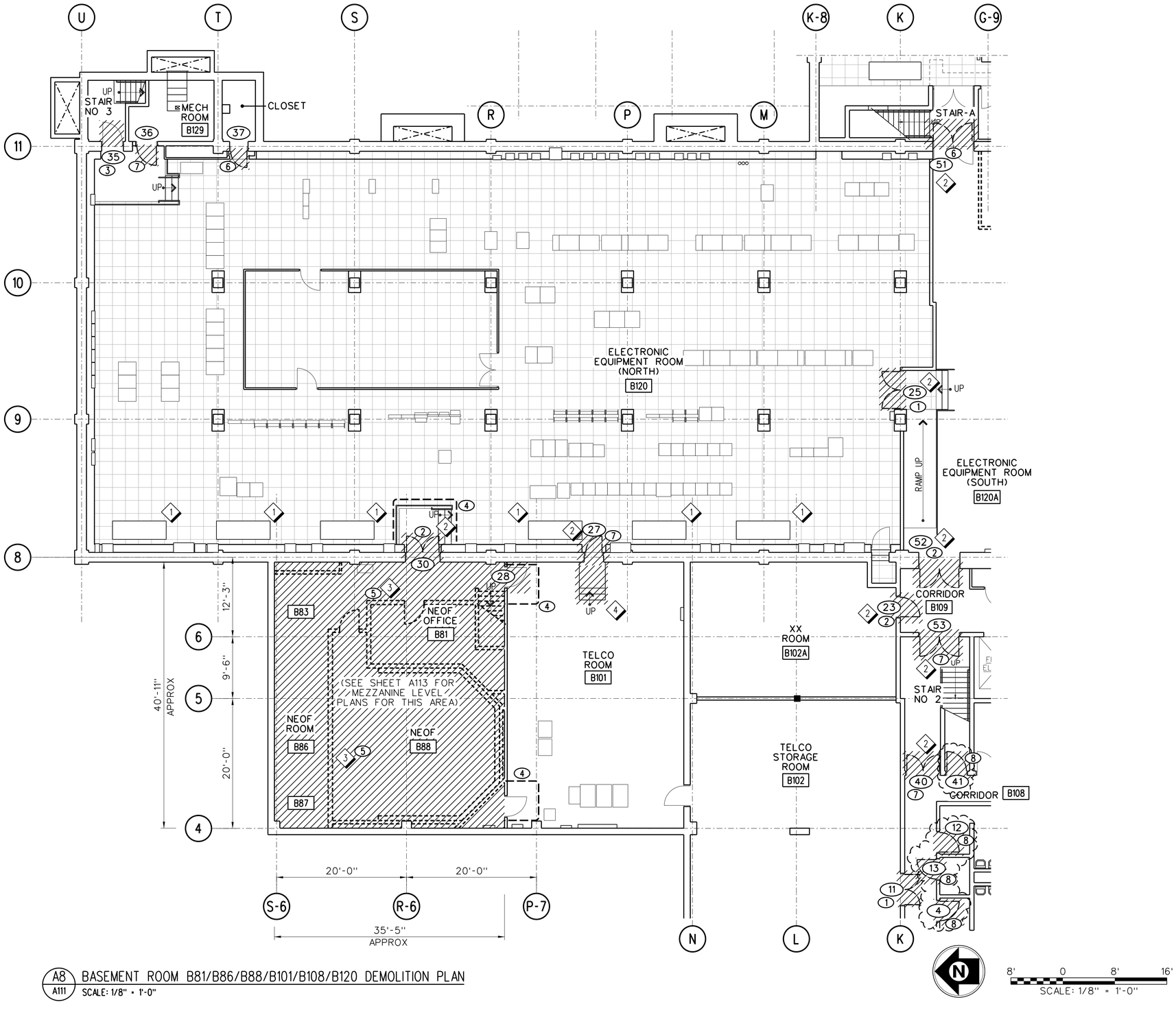

A8 / A111 BASEMENT ROOM B81/B86/B88/B101/B108/B120 DEMOLITION PLAN

SCALE: 1/8" = 1'-0"

DEMOLITION NOTES:

1. DEMOLISH DOOR AND DOOR HARDWARE. FRAME TO REMAIN. COORDINATE AND REMOVE SECURITY COMPONENTS AS REQUIRED.
2. DEMOLISH DOOR, FRAME AND DOOR HARDWARE. COORDINATE AND REMOVE SECURITY COMPONENTS AS REQUIRED.
3. DEMOLISH FRAME. SALVAGE DOOR AND HARDWARE FOR RE-USE. COORDINATE AND REMOVE SECURITY COMPONENTS AS REQUIRED.
4. PROVIDE DUSTPROOF PARTITIONS AROUND AREAS REQUIRING DEMOLITION PRIOR TO THE START OF WORK TO PROTECT EQUIPMENT FROM DUST, DIRT AND DEBRIS. MAINTAIN FLOOR PLENUM PRESSURIZATION.
5. ELEMENTS OF DEMOLITION INCLUDE, BUT ARE NOT LIMITED TO: ACM FLOOR TILE, BASE AND MASTICS, CARPETING, ALL STEEL FRAMING, GYPSUM WALLBOARD AND CEILINGS, ACOUSTICAL CEILINGS, WOOD FRAMING AND BLOCKING, WOODWORK AND TRIM, DOORS AND HARDWARE, CEILING SYSTEMS WITH STEEL FRAMING AND FURRING, CONCRETE ANCHORS, CABINET COUNTERS AND DISPLAY ASSEMBLIES, SOUND ABSORBING PANELS AND OTHER WALL COVERINGS, DISPLAY AND TACKBOARDS, INSULATION AND STAIRS, ELECTRICAL LIGHTING, POWER AND PA SYSTEM, TELCO, FIRE SUPPRESSION AND FIRE DETECTION SYSTEM, HVAC, AND COMMUNICATIONS ELEMENTS. SEE SHEET A021 FOR ACM.
6. DEMOLISH DOOR AND DOOR HARDWARE. FRAME TO REMAIN.
7. DEMOLISH FRAME, DOOR AND DOOR HARDWARE.
8. BID OPTION 1 - DEMOLISH DOOR AND DOOR HARDWARE. FRAME TO REMAIN.

SHEET NOTES:

1. REMOVE AND SAVE FOR REUSE/PROTECT ACCESS FLOORING AND ARCHITECTURAL FINISHES ASSOCIATED WITH AHU REPLACEMENT. REMOVE THE FURRED WALL/WALL SYSTEM AS NECESSARY TO ACCESS COMPONENTS FOR AHU REPLACEMENT. RETAIN REMOVED COMPONENTS FOR REINSTALLATION.
2. MAINTAIN REQUIRED EGRESS PASSAGEWAY AT DOORS.
3. DEMOLISH ALL PERIMETER AND INTERIOR GYPSUM WALLBOARD, FURRING, WALL COVERINGS, AND ALL INTERIOR METAL/STUD FRAME WALLS.
4. DEMOLISH PLYWOOD STAIRS.

CLOUD DENOTES BID OPTION SCOPE OF WORK

KEY PLAN:

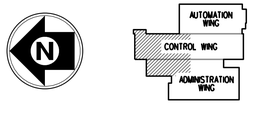

REV	APPROVED DATE	DESCRIPTION	JCN	REDLINE DATE	APVD

DEPARTMENT OF TRANSPORTATION
FEDERAL AVIATION ADMINISTRATION
ATO - TECHNICAL OPERATIONS — WESTERN SERVICE AREA

ARTCC

MAJOR MECHANICAL MODERNIZATION
BASEMENT ROOM B81/B86/B88/B108/B120
DEMOLITION PLAN

DENVER — LONGMONT — CO

REVIEWED BY	SUBMITTED BY: PAUL TULENKO (DO NOT SIGN) — PROJECT ENGINEER	APPROVED BY: CALLEN R. COLLINS (DO NOT SIGN) — MGR: ENGINEERING - SEATTLE
	DESIGNED: RC	ISSUED BY: ENGINEERING SERVICES ENROUTE/FSS
	DRAWN: JA	DATE / JCN: 1401893
	CHECKED	DRAWING NO: ZDV-1401893-A111 — REV

ISSUED FOR:

zdv-1401893-a111.dgn 7/10/2018 4:56:39 PM John CTR Allen

EDM: zdv-1401893-a111.dgn

DRAWING PRODUCED ON WSA MICROSTATION SYSTEM

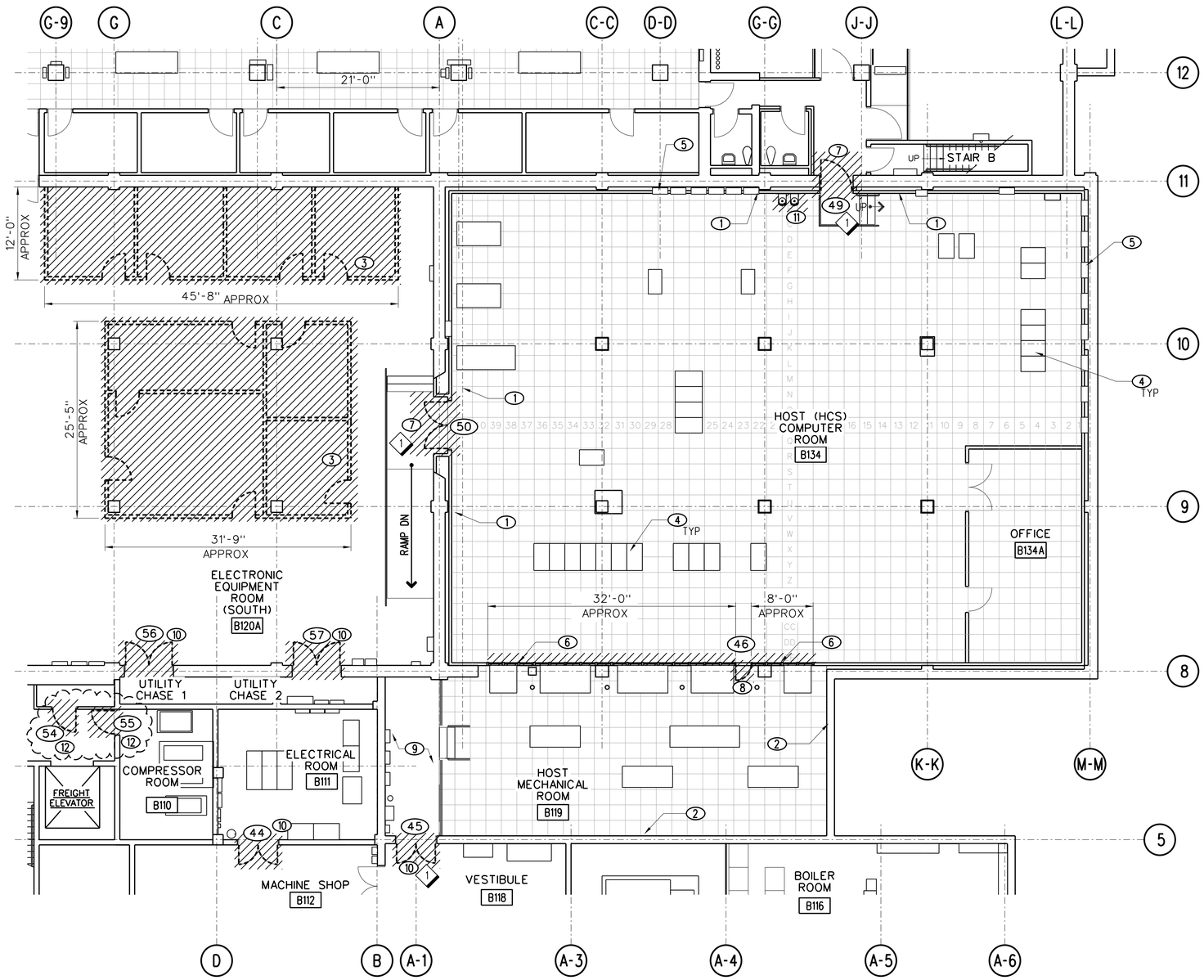

B8 / A112 BASEMENT ROOM B119/B120A/B134 DEMOLITION PLAN

SCALE: 1/8" = 1'-0"

DEMOLITION NOTES:

1. DEMOLISH RED AND ORANGE ACOUSTICAL WALL PANELS AND SUPPORT STRUCTURES ONLY IN ROOM B134.
2. DEMOLISH ALL ACOUSTICAL WALL PANELS AND SUPPORT STRUCTURES IN ROOM B119.
3. ALL GYPSUM WALL BOARD ON METAL STUD WALLS, DOORS AND CARPETING TO BE DEMOLISHED. DEMOLISH CARPETING AND ADHESIVES TO BARE CONCRETE.
4. EXISTING EQUIPMENT TO REMAIN, PROTECT FROM DAMAGE AND COORDINATE PROTECTION WITH COR.
5. DEMOLISH AS REQUIRED PARTITION AND ACOUSTICAL WALL PANELS TO ALLOW FOR INSTALLATION OF ELECTRICAL EQUIPMENT, REFER TO ELECTRICAL. SPECIAL PRECAUTION SHALL BE TAKEN DURING DEMOLITION OF ACOUSTICAL WALL PANELS AT ELECTRICAL PANELS.
6. DEMOLISH METAL LOUVERS.
7. DEMOLISH DOOR AND DOOR HARDWARE, FRAMES TO REMAIN. COORDINATE AND REMOVE SECURITY COMPONENTS AS REQUIRED.
8. DEMOLISH DOOR, FRAMES AND DOOR HARDWARE.
9. DEMOLISH VCT FLOORING. PREPARE FLOOR FOR NEW EPOXY FINISH.
10. DEMOLISH DOORS AND HARDWARE.
11. DEMOLISH DRINKING FOUNTAIN.
12. BID OPTION 1 - DEMOLISH DOOR AND DOOR HARDWARE, FRAMES TO REMAIN. COORDINATE AND REMOVE SECURITY COMPONENTS AS REQUIRED.

SHEET NOTES:

1. MAINTAIN REQUIRED EGRESS PASSAGEWAY AT DOORS.

CLOUD DENOTES BID OPTION SCOPE OF WORK

KEY PLAN:

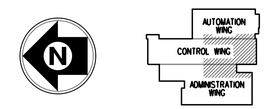

REV	APPROVED DATE	DESCRIPTION	JCN	REDLINE DATE	APVD

DEPARTMENT OF TRANSPORTATION
FEDERAL AVIATION ADMINISTRATION
ATO - TECHNICAL OPERATIONS WESTERN SERVICE AREA

ARTCC

MAJOR MECHANICAL MODERNIZATION BASEMENT ROOM B119/B120A/B134 DEMOLITION PLAN

DENVER LONGMONT CO

REVIEWED BY

SUBMITTED BY: PAUL TULENKO — PROJECT ENGINEER

APPROVED BY: CALLEN R. COLLINS — MGR: ENGINEERING - SEATTLE

DO NOT SIGN

DESIGNED: RC
DRAWN: JA
CHECKED:

ISSUED BY: ENGINEERING SERVICES ENROUTE/FSS

DATE:
JCN: 1401893
DRAWING NO: ZDV-1401893-A112
REV:

ISSUED FOR:

DRAWING PRODUCED ON WSA MICROSTATION SYSTEM

EDM: zdv-1401893-a112.dgn

mb-1401893-a112.dgn 7/10/2018 4:58:31 PM John CTR Allen

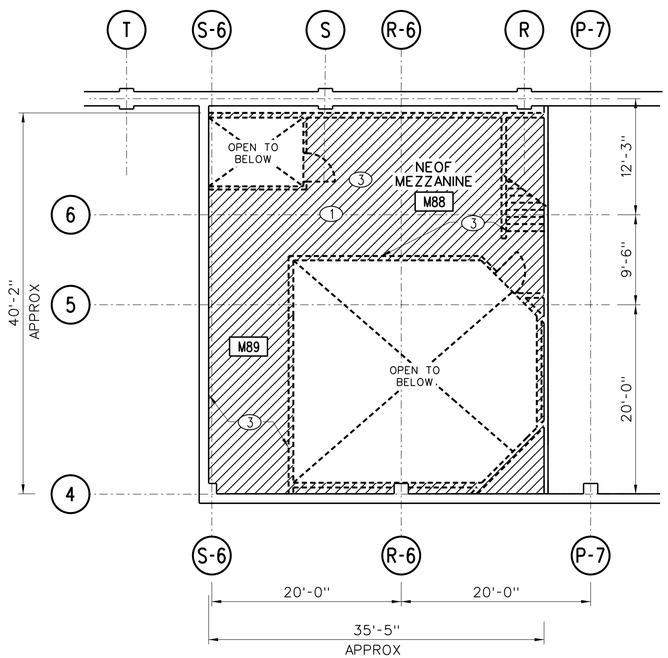

B7 / A113 NEOF MEZZANINE DEMOLITION PLAN
SCALE: 1/8" = 1'-0"

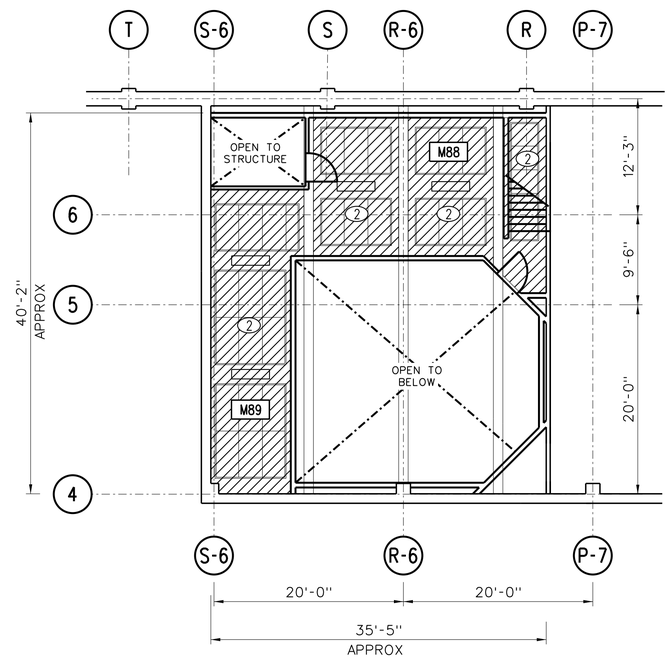

B5 / A113 NEOF MEZZANINE REFLECTED CEILING DEMOLITION PLAN
SCALE: 1/8" = 1'-0"

8' 0 8' 16'
SCALE: 1/8" = 1'-0"

DEMOLITION NOTES:

1. ELEMENTS OF DEMOLITION INCLUDE, BUT ARE NOT LIMITED TO: ACM FLOOR TILE, BASE AND MASTICS, CARPETING, ALL STEEL FRAMING, GYPSUM WALLBOARD AND CEILINGS, ACOUSTICAL CEILINGS, WOOD FRAMING AND BLOCKING, WOODWORK AND TRIM, DOORS AND HARDWARE, CEILING SYSTEMS WITH STEEL FRAMING AND FURRING, CONCRETE ANCHORS, CABINET COUNTERS AND DISPLAY ASSEMBLIES, SOUND ABSORBING PANELS AND OTHER WALL COVERINGS, DISPLAY AND TACKBOARDS, INSULATION AND STAIRS, ELECTRICAL LIGHTING, POWER AND PA SYSTEM, TELCO, FIRE SUPPRESSION AND FIRE DETECTION SYSTEM, HVAC, AND COMMUNICATIONS ELEMENTS. AS BUILT DRAWINGS OF THE NEOF AREA ARE AVAILABLE UPON REQUEST.
2. DEMOLISH ACT CEILING TILE AND CEILING SUPPORT STRUCTURE/SYSTEM. LIGHT FIXTURES TO BE DEMOLISHED (SEE ELECTRICAL SHEETS FOR DETAIL).
3. DEMOLISH ALL PERIMETER GYPSUM WALLBOARD, FURRING, AND WALL COVERINGS, ALL INTERIOR GYPSUM WALLBOARD, FURRING AND WALL COVERINGS, AND ALL INTERIOR METAL STUD/STEEL FRAME WALLS.

KEY PLAN:

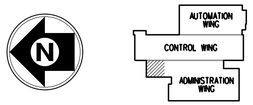

REV	APPROVED DATE	DESCRIPTION	JCN	REDLINE DATE	APVD

DEPARTMENT OF TRANSPORTATION
FEDERAL AVIATION ADMINISTRATION
ATO - TECHNICAL OPERATIONS — WESTERN SERVICE AREA

ARTCC
MAJOR MECHANICAL MODERNIZATION
NEOF MEZZANINE ROOM M88
DEMOLITION PLAN AND DEMOLITION RCP

DENVER — LONGMONT — CO

REVIEWED BY	SUBMITTED BY: PAUL TULENKO (DO NOT SIGN)	APPROVED BY: CALLEN R. COLLINS (DO NOT SIGN)
	PROJECT ENGINEER	MGR: ENGINEERING - SEATTLE
	DESIGNED: RC	ISSUED BY: ENGINEERING SERVICES ENROUTE/FSS
	DRAWN: JA	DATE: JCN: 1401893
	CHECKED	DRAWING NO: ZDV-1401893-A113 REV:

ISSUED FOR:

rdp-1401893-a113.dgn 6/26/2018 11:43:04 AM John CTR Allen

DGN: zdv-1401893-a113.dgn

DRAWING PRODUCED ON WSA MICROSTATION SYSTEM

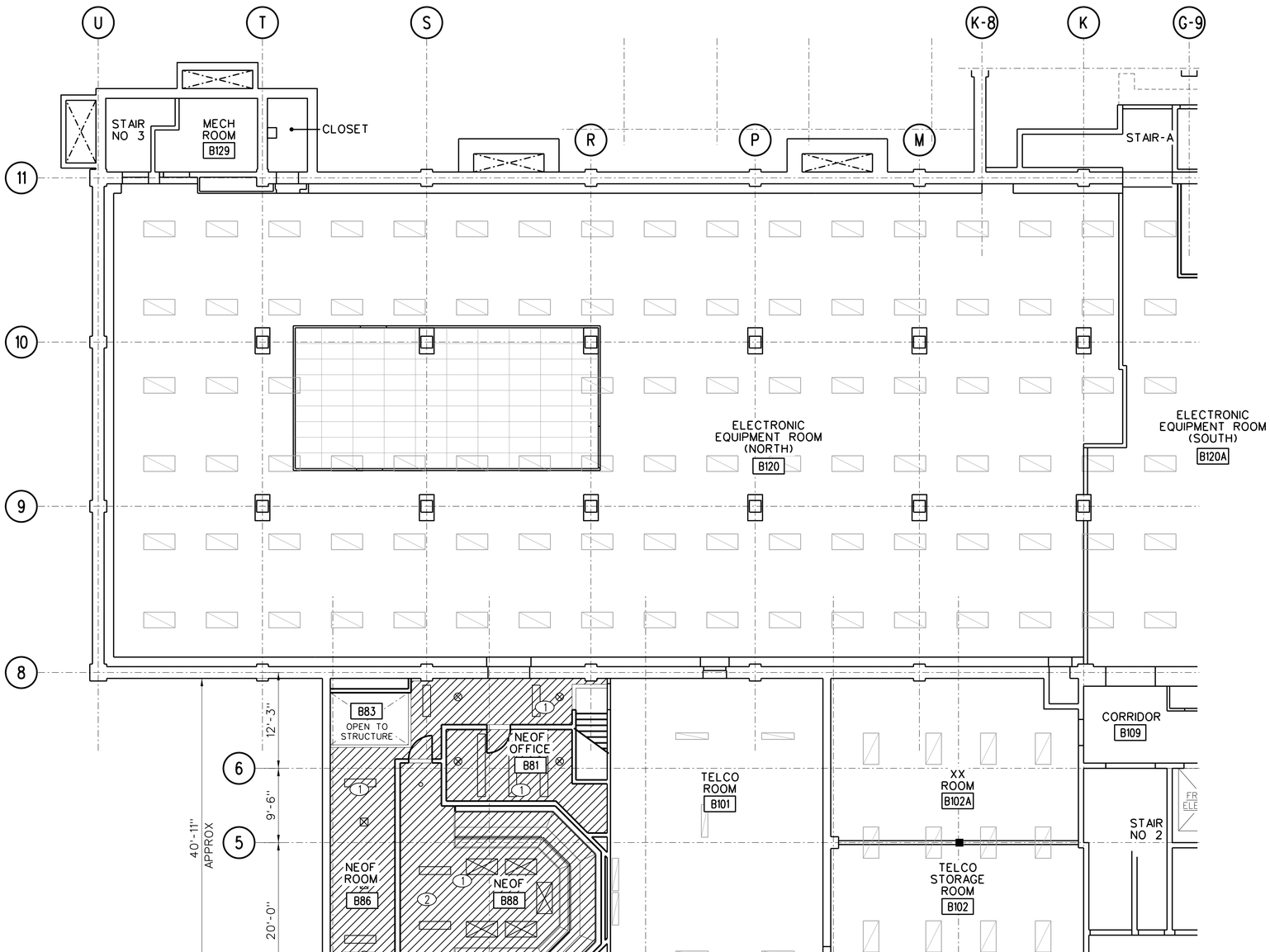

A8 / A131 BASEMENT ROOM B81/B86/B88 REFLECTED CEILING DEMOLITION PLAN

SCALE: 1/8" = 1'-0"

8' 0 8' 16'

SCALE: 1/8" = 1'-0"

DEMOLITION NOTES:

1. DEMOLISH ACT TILE CEILING, ACP CEILING AND SUPPORTING STRUCTURE/SYSTEM. LIGHT FIXTURES TO BE DEMOLISHED (SEE ELECTRICAL SHEETS FOR DETAIL).
2. AS BUILT DRAWINGS OF THE NEOF AREA ARE AVAILABLE UPON REQUEST.

KEY PLAN:

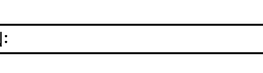

REV	APPROVED DATE	DESCRIPTION	JCN	REDLINE DATE	APVD

DEPARTMENT OF TRANSPORTATION
FEDERAL AVIATION ADMINISTRATION
ATO - TECHNICAL OPERATIONS WESTERN SERVICE AREA

ARTCC

MAJOR MECHANICAL MODERNIZATION BASEMENT ROOM B81/B86/B88 REFLECTED CEILING DEMOLITION PLAN

DENVER LONGMONT CO

REVIEWED BY: DO NOT SIGN

SUBMITTED BY: PAUL TULENKO — PROJECT ENGINEER

APPROVED BY: CALLEN R. COLLINS — MGR: ENGINEERING - SEATTLE

DESIGNED: RC
DRAWN: JA
CHECKED:

ISSUED BY: ENGINEERING SERVICES ENROUTE/FSS

DATE:
JCN: 1401893
DRAWING NO: ZDV-1401893-A131
REV:

ISSUED FOR:

DRAWING PRODUCED ON WSA MICROSTATION SYSTEM

zdv-1401893-a131.dgn 6/26/2018 11:41:52 AM John CTR Allen

EDM: zdv-1401893-a131.dgn

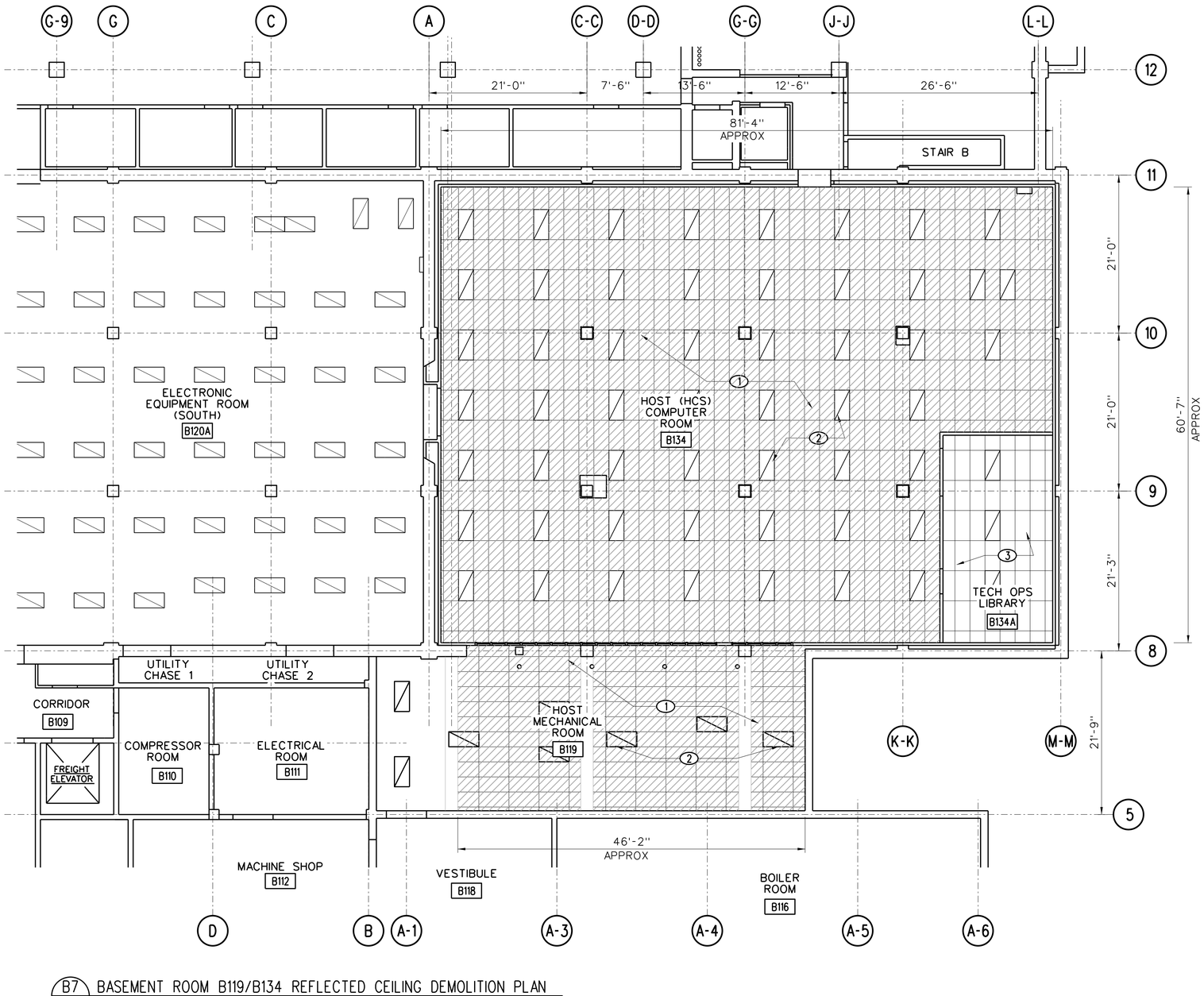

B7 / A132 BASEMENT ROOM B119/B134 REFLECTED CEILING DEMOLITION PLAN

SCALE: 1/8" = 1'-0"

8' 0 8' 16'

SCALE: 1/8" = 1'-0"

DEMOLITION NOTES:

1. DEMOLISH APC CEILING TILE AND GRID SYSTEM. LIGHT FIXTURES TO REMAIN (SEE ELECTRICAL SHEETS FOR DETAIL). VACUUM TOP OF TILES PRIOR TO REMOVAL.
2. FROM THE CEILING SUPPORT UP TO STRUCTURE, DISCONNECT AND SUPPORT ALL HVAC, ELECTRICAL, FIRE SUPPRESSION, FIRE DETECTION, TELCO/LAN COMPONENTS, AND ALL OTHER ATTACHMENTS INCLUDING FREE RUN WIRING.
3. RETAIN EXISTING APC, PROTECT FROM DAMAGE.

KEY PLAN:

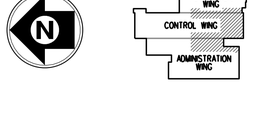

REV	APPROVED DATE	DESCRIPTION	JCN	REDLINE DATE	APVD

DEPARTMENT OF TRANSPORTATION
FEDERAL AVIATION ADMINISTRATION
ATO - TECHNICAL OPERATIONS WESTERN SERVICE AREA

ARTCC

MAJOR MECHANICAL MODERNIZATION
BASEMENT ROOM B119/B134
REFLECTED CEILING DEMOLITION PLAN

DENVER LONGMONT CO

REVIEWED BY

SUBMITTED BY: PAUL TULENKO — PROJECT ENGINEER

APPROVED BY: CALLEN R. COLLINS — MGR: ENGINEERING - SEATTLE

DO NOT SIGN

DESIGNED RC
DRAWN JA
CHECKED

ISSUED BY: ENGINEERING SERVICES ENROUTE/FSS

DATE
JCN 1401893
DRAWING NO ZDV-1401893-A132
REV

ISSUED FOR:

rdp-1401893-a132.dgn 6/26/2018 11:42:25 AM John CTR Allen

EDM: zdv-1401893-a132.dgn

DRAWING PRODUCED ON WSA MICROSTATION SYSTEM

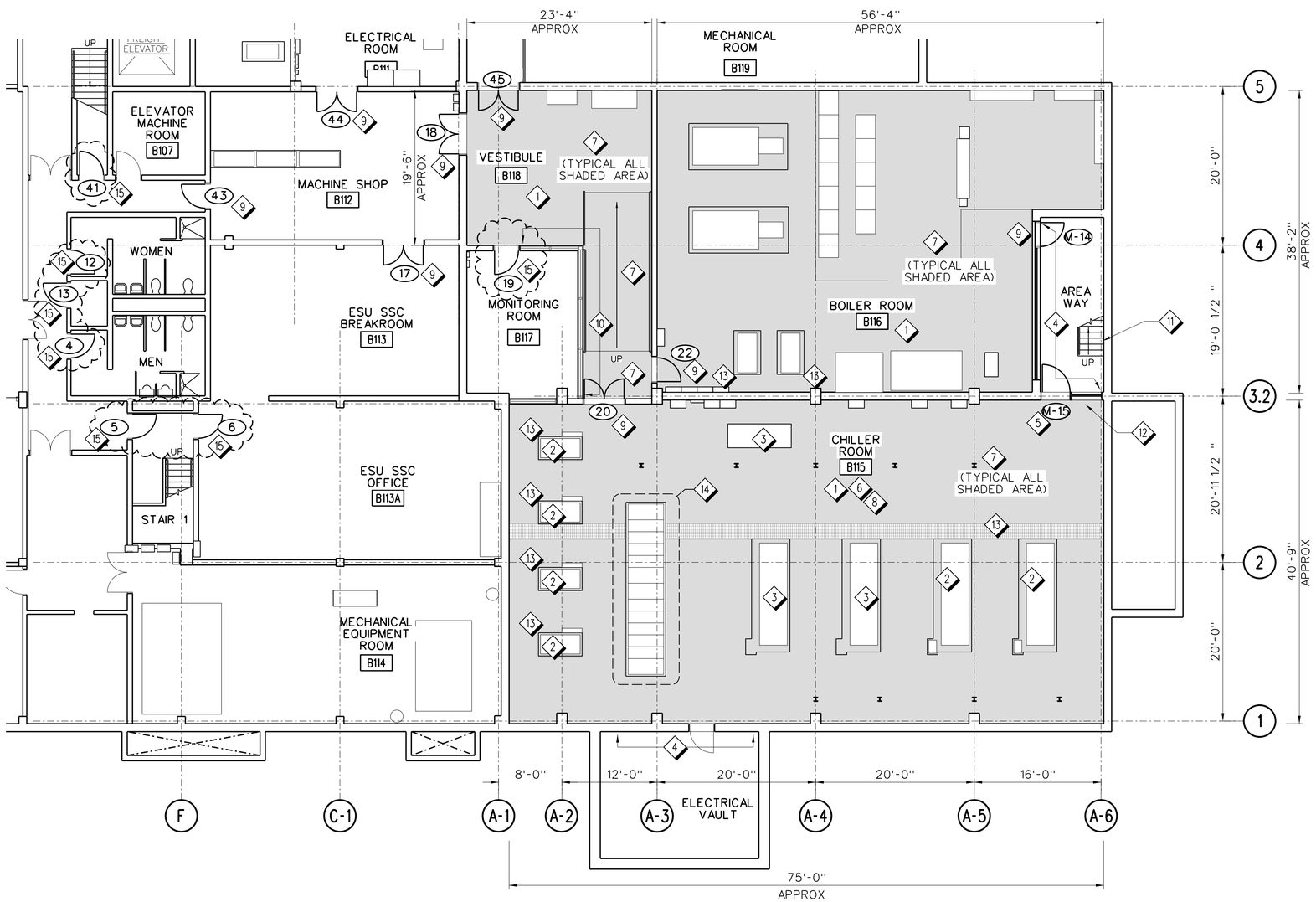

C8 / A201 BASEMENT ROOM B112/B115/B116/B118 FLOOR PLAN

SCALE: 1/8" = 1'-0"

CLOUD DENOTES BID OPTION SCOPE OF WORK

8' 0 8' 16'

SCALE: 1/8" = 1'-0"

GENERAL SHEET NOTES:

A. PROTECT EXISTING OPERATIONAL AND NON-OPERATIONAL EQUIPMENT FROM DUST, DEBRIS AND WATER. EQUIPMENT IS CRITICAL TO THE OPERATION AND FUNCTION OF THIS FACILITY.

B. SEE MECHANICAL AND ELECTRICAL FOR EQUIPMENT LOCATIONS.

C. PROVIDE EXIT SIGNS ADHERED TO NEW DOORS, IN LOCATIONS WHERE REQUIRED BY CODE.

SHEET NOTES:

1. SMOKE AND FIRESTOP EXISTING AND NEW PENETRATIONS IN FIRE RATED BARRIERS.
2. CONCRETE MAINTENANCE PADS FOR EQUIPMENT TO REMAIN. ALL EXPOSED SURFACES OF EQUIPMENT PADS SHALL BE PAINTED SAFETY YELLOW.
3. 6" HIGH CONCRETE MAINTENANCE PAD FOR MECHANICAL EQUIPMENT REQUIRED. REUSE EXISTING PADS, REFER TO MECHANICAL FOR SIZE OF PADS REQUIRED. IF LARGER PADS ARE REQUIRED, EXPAND EXISTING. ALL EXPOSED SURFACES OF EQUIPMENT PADS SHALL BE PAINTED SAFETY YELLOW.
4. REPAIR FOUNDATION SLAB LEAK TO PREVENT WATER INTRUSION INTO BOILER ROOM B116 AND CHILLER ROOM B115. SUBMIT WATERPROOFING SYSTEM FOR APPROVAL. REFER TO SPECIFICATIONS FOR REQUIREMENTS
5. REINSTALL DOOR AND LOUVER ASSEMBLY. COORDINATE WITH MECHANICAL. COORDINATE RECONNECTION OF SECURITY SYSTEM WITH SSDI CONTRACTOR.
6. PATCH, REPAIR AND PREPARE WALLS AND CEILING TO BE PAINTED.
7. PROVIDE FLOOR FINISH, BASES AND TRANSITIONS.
8. PAINT WALLS AND CEILINGS. PAINT PIPE AND CONDUITS THAT ARE WITHIN 6" OF WALLS AND CEILINGS, AND PAINT OTHER ITEMS THAT ARE WITHIN 6" OF WALLS AND CEILINGS AT THE DISCRETION OF THE COR. FIRE SUPPRESSION PIPING SHALL BE PAINTED RED. DO NOT PAINT FIRE SUPPRESSION OR DETECTION SYSTEM COMPONENTS, AND DO NOT PAINT FIRE STOPPING MATERIALS. DO NOT PAINT OVER IDENTIFICATION PLACARDS FOR FIRE PENENTRATIONS. PROTECT ALL EQUIPMENT FROM PAINT AND DEBRIS. THOROUGHLY CLEAN ALL SURFACES INCLUDING EQUIPMENT AFTER PAINTING
9. PROVIDE DOORS. REWORK EXISTING DOOR FRAMES IN PLACE. SEE DOOR SCHEDULE.
10. PROVIDE 1 HOUR FIRE RATED FRAME AND GLAZING ASSEMBLY.
11. REPAIR, REFURBISH AND PAINT EXISTING STAIRS. REPLACE STAIRS ONCE ALL MAJOR EQUIPMENT IS DEMOLISHED AND REPLACED IN CHILLER ROOM.
12. REPLACE CONCRETE THRESHOLD/CURB IF IT WAS REQUIRED TO BE DEMOLISHED FOR CHILLERS. ALL EXPOSED SURFACES OF CURB SHALL BE PAINTED SAFETY YELLOW.
13. PROTECT EXISTING FLOOR DRAINS FROM INFILTRATION OF DEBRIS AND DAMAGE. PROVIDE NEW ALUMINUM GRATING TRENCH COVERS IN CHILLER ROOM, USE EXISTING TRENCH COVERS AS TEMPLATES.
14. PROVIDE DUST PROOF PARTITION AROUND ESSENTIAL SWITCHGEAR TO PROTECT FROM DAMAGE. DUST PROOF PARTITION SHALL ALLOW ACCESS TO SWITCHGEAR EQUIPMENT FOR MAINTENANCE PERSONNEL. HEAT LOAD TO BE CONSIDERED IN CONSTRUCTION OF DUST PROOF PARTITION.
15. BID OPTION 1 - PROVIDE DOOR(S) AND HARDWARE. SEE A801 FOR DOOR SCHEDULE, HARDWARE SET NO. AND FINISH SCHEDULE.

KEY PLAN:

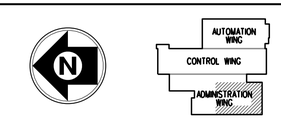

REV	APPROVED DATE	DESCRIPTION	JCN	REDLINE DATE	APVD

DEPARTMENT OF TRANSPORTATION
FEDERAL AVIATION ADMINISTRATION
ATO - TECHNICAL OPERATIONS WESTERN SERVICE AREA

ARTCC

MAJOR MECHANICAL MODERNIZATION BASEMENT ROOM B112/B115/B116/B118 FLOOR PLAN

DENVER LONGMONT CO

REVIEWED BY

SUBMITTED BY: PAUL TULENKO — PROJECT ENGINEER

APPROVED BY: CALLEN R. COLLINS — MGR: ENGINEERING - SEATTLE

DO NOT SIGN

DESIGNED RC
DRAWN JA
CHECKED

ISSUED BY: ENGINEERING SERVICES ENROUTE/FSS

DATE
JCN 1401893
DRAWING NO ZDV-1401893-A201
REV

ISSUED FOR:

DRAWING PRODUCED ON WSA MICROSTATION SYSTEM

EDM: zdv-1401893-a201.dgn

rsb-1401893-a201.dgn 7/10/2018 4:18:36 PM John CTR Allen

GENERAL SHEET NOTES:

A. PROVIDE EXIT SIGNS ADHERED TO NEW DOORS, IN LOCATIONS WHERE REQUIRED BY CODE.

SHEET NOTES:

1. PAINT WALLS AND CEILING WHERE DAMAGED BY THE WORK, OR WHERE EQUIPMENT HAS BEEN REMOVED THAT EXPOSES FINISHES THAT DO NOT MATCH ADJACENT SURFACES. COORDINATE WITH COR.
2. PREPARE FLOOR FOR FINISH PER MANUFACTURER'S DIRECTIONS. CLEAN CONCRETE SLAB FLOOR.
3. REPLACE FLOOR DRAIN GRATES.
4. PROVIDE CONCRETE SEALER FOR FLOOR.
5. PROVIDE FLUME COVERS. SEE SPECIFICATIONS FOR ADDITIONAL INFORMATION.
6. REFER TO DRAWINGS C002 AND C003 FOR FENCING DETAILS AND GROUNDING.

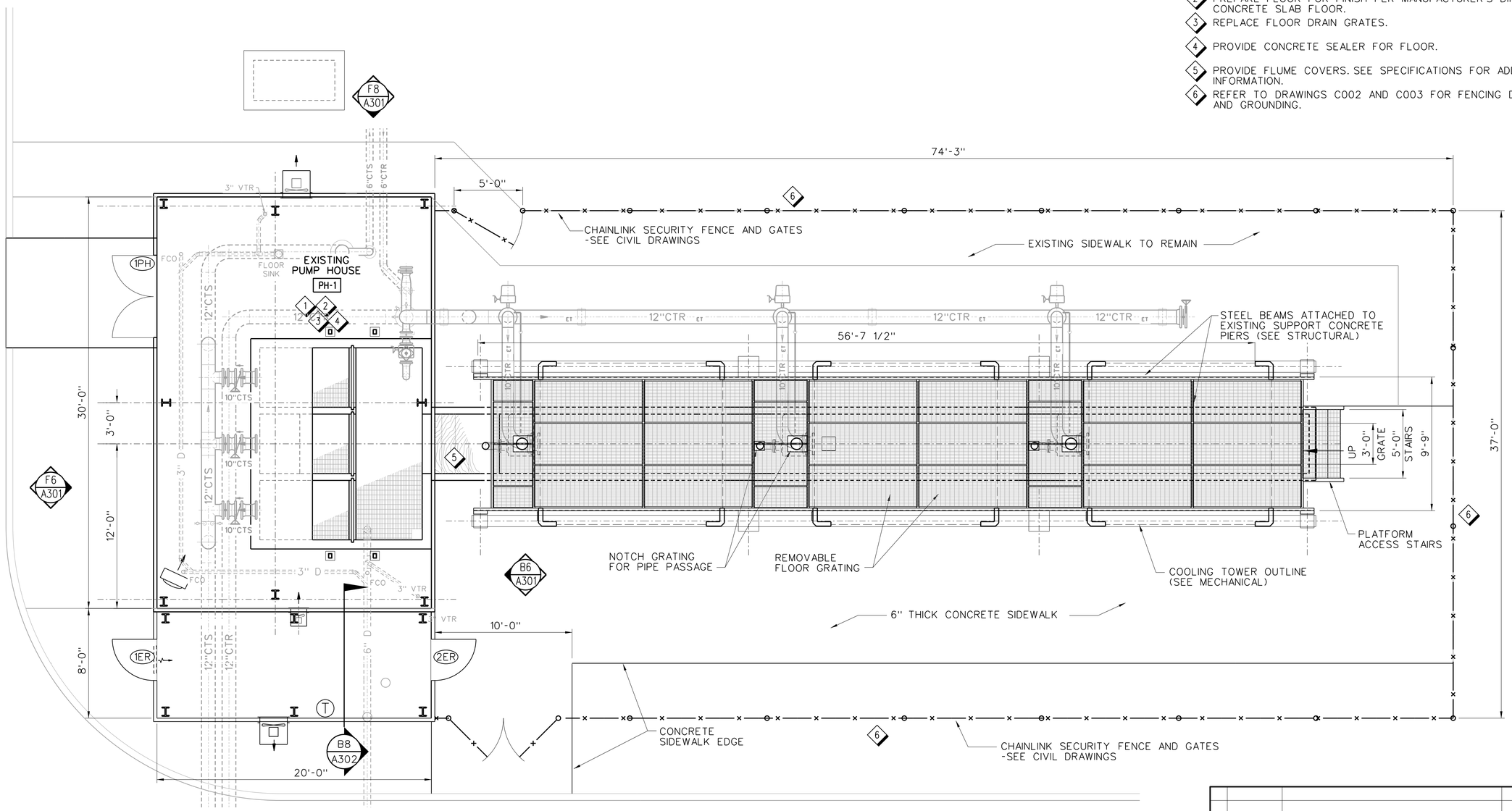

C7 A202 COOLING TOWER PUMP HOUSE PLAN
SCALE: 1/4" = 1'-0"

4' 0 4' 8'
SCALE: 1/4" = 1'-0"

REV	APPROVED DATE	DESCRIPTION	JCN	REDLINE DATE	APVD

DEPARTMENT OF TRANSPORTATION
FEDERAL AVIATION ADMINISTRATION
ATO - TECHNICAL OPERATIONS — WESTERN SERVICE AREA

ARTCC

MAJOR MECHANICAL MODERNIZATION
COOLING TOWER AND PUMP HOUSE
FLOOR PLAN

DENVER — LONGMONT — CO

REVIEWED BY

SUBMITTED BY: PAUL TULENKO — PROJECT ENGINEER

APPROVED BY: CALLEN R. COLLINS — MGR: ENGINEERING - SEATTLE

DO NOT SIGN

DESIGNED: RC
DRAWN: JA
CHECKED

ISSUED BY: ENGINEERING SERVICES ENROUTE/FSS

DATE
JCN: 1401893
DRAWING NO: ZDV-1401893-A202
REV

ISSUED FOR:

DRAWING PRODUCED ON WSA MICROSTATION SYSTEM

zdv-1401893-a202.dgn 7/10/2018 10:20:07 AM John CTR Allen

EDM: zdv-1401893-a202.dgn

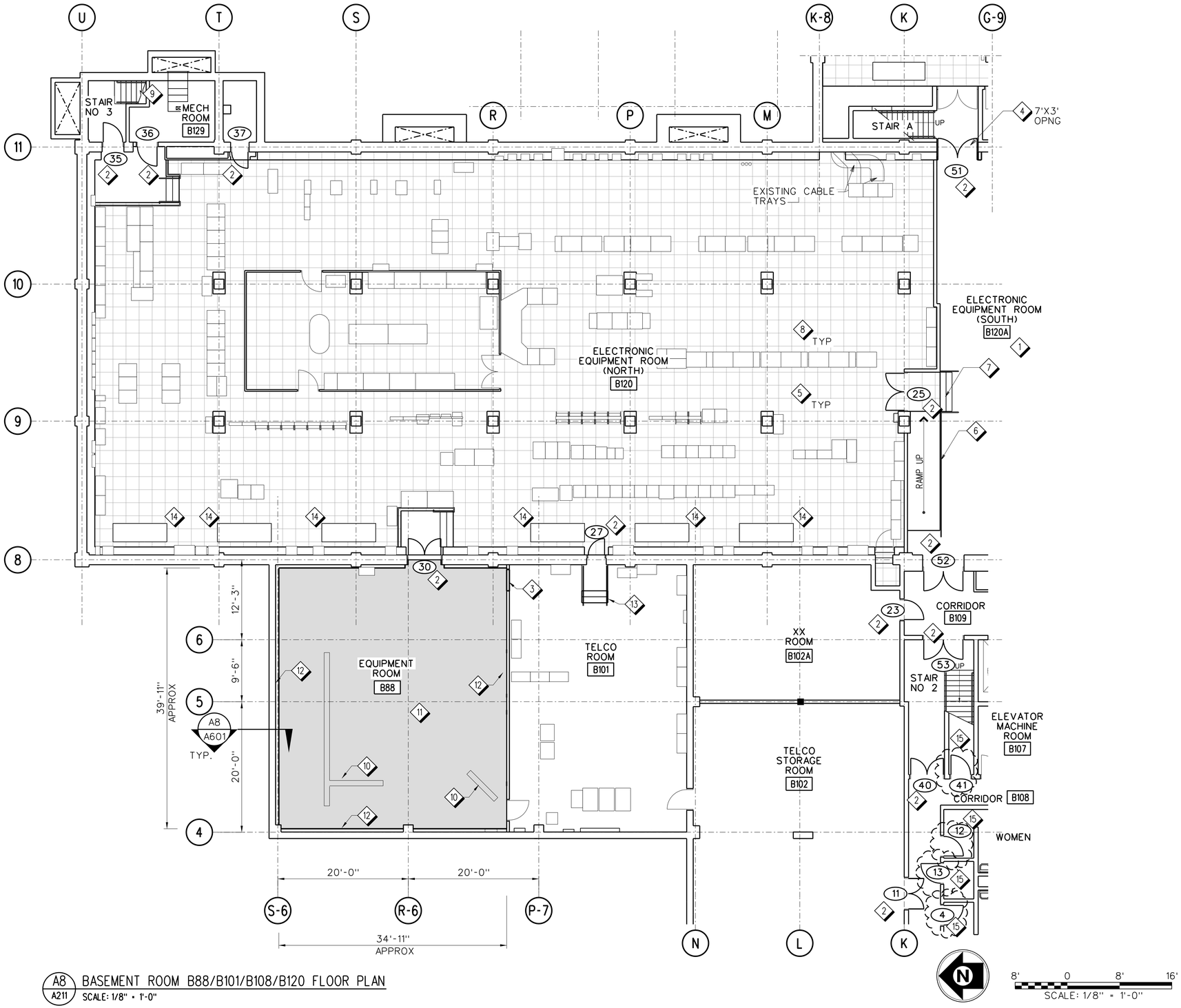

A8 / A211 BASEMENT ROOM B88/B101/B108/B120 FLOOR PLAN
SCALE: 1/8" = 1'-0"

GENERAL NOTES:

A. WORK IN THIS AREA ALSO INCLUDES FIRE STOPPING OF WALL PENETRATIONS. SEE MECHANICAL AND ELECTRICAL DRAWINGS FOR EXAMPLE OF SOME, BUT NOT ALL, WALL PENETRATIONS REQUIRING POSSIBLE FIRESTOPPING. FIELD VERIFY CONDITIONS.

B. PROVIDE EXIT SIGNS ADHERED TO NEW DOORS, IN LOCATIONS WHERE REQUIRED BY CODE.

SHEET NOTES:

1. INSPECT AND AUGMENT FIRE-STOPPING IN WALLS AND CEILING OPENINGS.
2. PROVIDE DOOR(S) AND HARDWARE. SEE A801 FOR DOOR SCHEDULE AND HARDWARE SET NO. AND FINISH SCHEDULE.
3. INFILL EXISTING DOOR OPENING. CONSTRUCTION TO MATCH ADJACENT WALL.
4. FIRE AND SMOKE STOP OPENINGS. COORDINATE W/ ELEC OR MECH WORK AS REQUIRED, TYPICAL. VIF ACTUAL OPENING SIZE.
5. PROTECT EXISTING ACCESS FLOOR SYSTEM TO REMAIN FROM DAMAGE.
6. PROTECT EXISTING HANDRAIL.
7. PROTECT EXISTING ACCESS FLOOR SYSTEM RAMP, STEPS AND LANDING TO REMAIN FROM DAMAGE.
8. PROTECT EXISTING OPERATIONAL EQUIPMENT, TYPICAL. COORDINATE PROTECTION WITH COR.
9. PROVIDE SWING GATE AT EXIT LEVEL FIRST FLOOR LANDING PER CODE. SEE DETAIL A601.
10. EXISTING FLOOR TRENCH. REPLACE TRENCH COVER PLATE. COORDINATE COVER PLATE WITH REQUIREMENTS OF FLOOR FINISHES.
11. PROVIDE FLOOR COVERING.
12. CONCRETE WALLS TO BE FURRED OUT PER DETAIL A8/A601. PATCH/REPAIR INTERIOR PARTITION AND PAINT WALLS IN OFFICE AREA. SEE FINISH SCHEDULES.
13. PROVIDE STAIRS AND HAND RAIL - SEE DETAIL A601.
14. COORDINATE REMOVAL AND REINSTALLATION OF RAISED FLOOR SYSTEM AT AIR HANDLERS AS NECESSARY FOR AHU INSTALLATION.
15. BID OPTION 1 - PROVIDE DOOR(S) AND HARDWARE. SEE A801 FOR DOOR SCHEDULE, HARDWARE SET NO. AND FINISH SCHEDULE.

LEGEND:

CLOUD DENOTES BID OPTION SCOPE OF WORK

KEY PLAN:

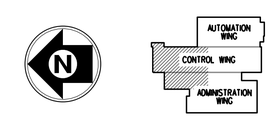

REV	APPROVED DATE	DESCRIPTION	JCN	REDLINE DATE	APVD

DEPARTMENT OF TRANSPORTATION
FEDERAL AVIATION ADMINISTRATION
ATO - TECHNICAL OPERATIONS WESTERN SERVICE AREA

ARTCC

MAJOR MECHANICAL MODERNIZATION
BASEMENT ROOM B88/B101/B108/B120
FLOOR PLAN

DENVER LONGMONT CO

REVIEWED BY

SUBMITTED BY: PAUL TULENKO — PROJECT ENGINEER
APPROVED BY: CALLEN R. COLLINS — MGR: ENGINEERING - SEATTLE

DO NOT SIGN

DESIGNED RC
DRAWN JA
CHECKED

ISSUED BY: ENGINEERING SERVICES ENROUTE/FSS

DATE
JCN 1401893
DRAWING NO ZDV-1401893-A211
REV

ISSUED FOR:

DRAWING PRODUCED ON WSA MICROSTATION SYSTEM

tb-1401893-a211.dgn 7/10/2018 4:24:25 PM John CTR Allen

EDM: zdv-1401893-a211.dgn

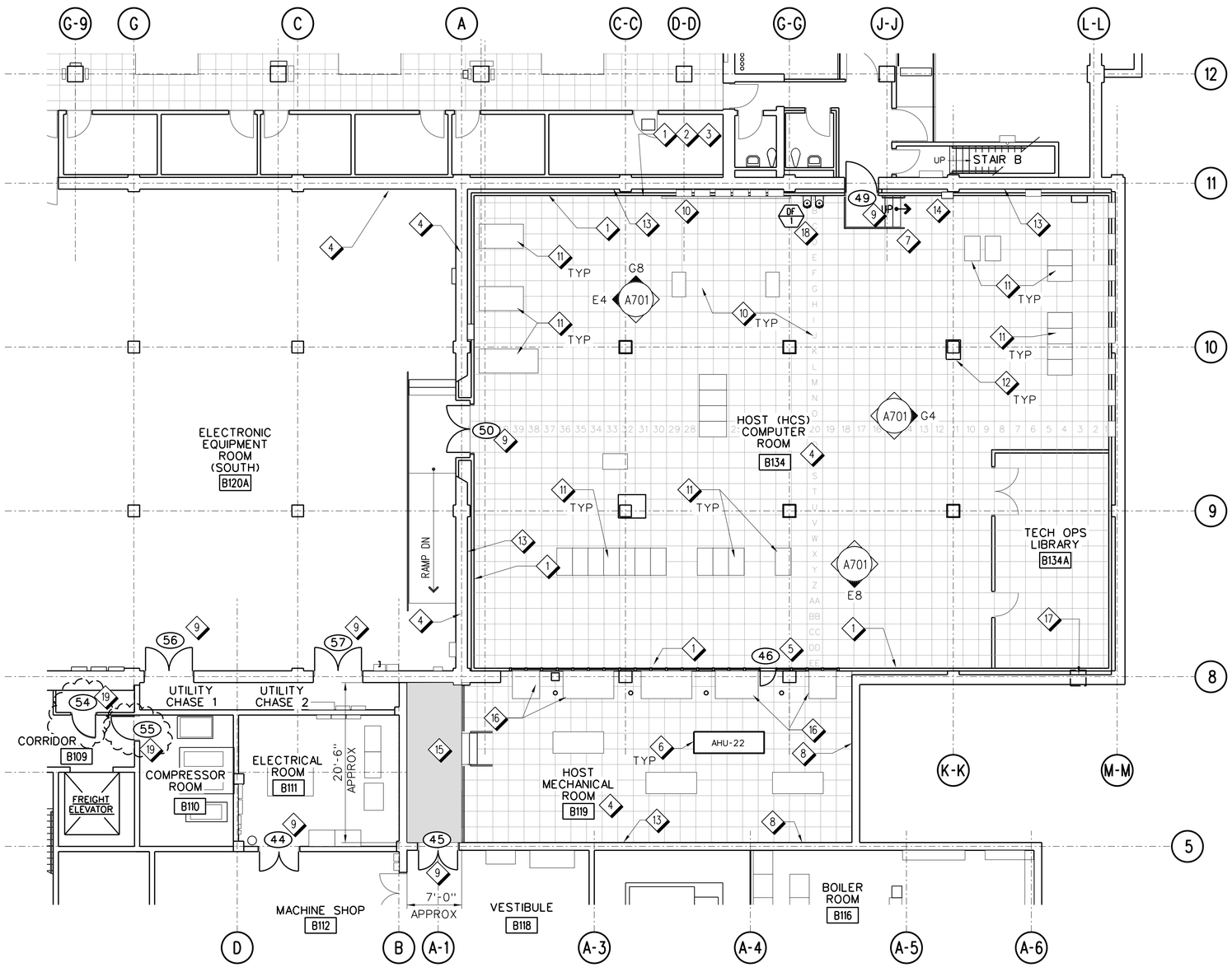

B8 / A212 BASEMENT ROOM B119/B120A/B134 FLOOR PLAN

SCALE: 1/8" = 1'-0"

8' 0 8' 16'

SCALE: 1/8" = 1'-0"

GENERAL SHEET NOTES:

A. PROVIDE EXIT SIGNS ADHERED TO NEW DOORS, IN LOCATIONS WHERE REQUIRED BY CODE.

SHEET NOTES:

1. PROVIDE ACOUSTICAL WALL PANELS.
2. INFILL OPENING IN FURRED OUT PARTITION WITH 5/8" GWB TO MATCH EXISTING. USE DUSTLESS JOINT COMPOUND TO PROTECT SENSITIVE ELECTRONIC EQUIPMENT IN ROOM.
3. PATCH AND REPAIR PARTITION TO MATCH ADJACENT SURFACES TO ALLOW FOR INSTALLATION OF ELECTRICAL EQUIPMENT. WALLS TO HAVE SMOOTH FINISH FOR PAINT FINISH.
4. INSPECT FIRE-STOPPING IN WALL AND CEILING OPENINGS. INSTALL NEW FIRE-STOPPING AT ANY OPENINGS THAT FAIL INSPECTION.
5. PROVIDE FRAME, DOOR AND HARDWARE. SEE DOOR SCHEDULE ON SHEET A801 FOR HARDWARE REQUIREMENTS AND FINISHES.
6. EXISTING AHU'S, ONE (1) OF FOUR TO BE REPLACED. REMOVE AND REINSTALL RAISED FLOOR SYSTEM AS REQUIRED TO INSTALL AHU.
7. PROVIDE ADA/ABA COMPLIANT GUARD AND HAND RAILS.
8. PATCH/REPAIR AND PAINT WALL TO MATCH EXISTING FINISHES.
9. PROVIDE DOORS AND HARDWARE. SEE DOOR SCHEDULE ON SHEET A801 FOR HARDWARE REQUIREMENTS AND FINISHES.
10. EXISTING ACCESS FLOOR SYSTEM TO REMAIN. SEAL AIRTIGHT INTERFACES AT THE SYSTEM PERIMETER, COLUMN ENCLOSURE, AND PENETRATIONS.
11. ALL EQUIPMENT IS OPERATIONAL AND SENSITIVE. ALL EQUIPMENT SHALL BE PROTECTED FROM DUST, OVERHEATING AND ANY OTHER SORT OF PHYSICAL DAMAGE. ADEQUATE AIR FLOW TO EQUIPMENT SHALL BE MAINTAINED AT ALL TIMES.
12. VERIFY IN FIELD WITH COR WHERE COLUMN ENCLOSURES REQUIRE TO BE REFINISHED. IF VGWB, REPLACE TO MATCH EXISTING. IF PAINTED, REPAINT TO MATCH EXISTING COLOR.
13. PROVIDE SIGNAGE (STENCIL OR PERMANENT PLACARD) ON FIRE RATED WALLS BELOW ACCESS FLOOR SYSTEM WITH THE FOLLOWING WORDING: "FIRE AND SMOKE BARRIER - PROTECT ALL OPENINGS". TEXT SHALL BE 3" IN HEIGHT, 3/8" THICK STROKE WIDTH AND SIGNAGE SHALL BE REPEATED AT 10'-0" ON CENTER MAXIMUM. OBSERVE WITH COR IF THERE ARE ANY NEW OR EXISTING OPENINGS IN FIRE RATED PARTITIONS, WALLS AND FIRST FLOOR SLAB ABOVE THAT REQUIRE TO BE FIRE AND SMOKE STOPPED.
14. PROVIDE FIRE EXTINGUISHER CABINET, WITH "FIRE EXTINGUISHER" SIGN ABOVE.
15. PROVIDE FLOOR COVERING.
16. EXISTING METAL RETURN DUCTS.
17. INSPECT EXISTING EXHAUST LOUVER ABOVE CEILING. BLANK OFF LOUVER WITH INSULATED METAL PANEL IF LOUVER IS STILL OPERATIONAL.
18. PROVIDE ELECTRIC WATER COOLER WITH BOTTLE FILLER. COORDINATE WITH MECHANICAL.
19. BID OPTION 1 - PROVIDE DOOR(S) AND HARDWARE. SEE A801 FOR DOOR SCHEDULE, HARDWARE SET NO. AND FINISH SCHEDULE.

LEGEND:

CLOUD DENOTES BID OPTION SCOPE OF WORK

KEY PLAN:

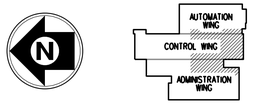

REV	APPROVED DATE	DESCRIPTION	JCN	REDLINE DATE	APVD

DEPARTMENT OF TRANSPORTATION
FEDERAL AVIATION ADMINISTRATION
ATO - TECHNICAL OPERATIONS WESTERN SERVICE AREA

ARTCC

MAJOR MECHANICAL MODERNIZATION
BASEMENT ROOM B119/B120A/B134
FLOOR PLAN

DENVER LONGMONT CO

REVIEWED BY

SUBMITTED BY: PAUL TULENKO — PROJECT ENGINEER

APPROVED BY: CALLEN R. COLLINS — MGR: ENGINEERING - SEATTLE

DO NOT SIGN

DESIGNED RC
DRAWN JA
CHECKED

ISSUED BY: ENGINEERING SERVICES ENROUTE/FSS

DATE
JCN 1401893
DRAWING NO ZDV-1401893-A212
REV

ISSUED FOR:

DRAWING PRODUCED ON WSA MICROSTATION SYSTEM

EDM: zdv-1401893-a212.dgn

zdv-1401893-a212.dgn 7/10/2018 4:50:51 PM John CTR Allen

GENERAL SHEET NOTES:

A. GENERAL REQUIREMENTS FOR THE ELECTRICAL ROOM ADDITION PREFABRICATED METAL BUILDING SYSTEM AS SHOWN ARE MINIMUM REQUIREMENTS.

B. CONTRACTOR SHALL SUBMIT FOR APPROVAL MANUFACTURER'S PRODUCT DATA AND SHOP DRAWINGS FOR THE PREFABRICATED METAL BUILDING ELECTRICAL ROOM ADDITION. SHOP DRAWINGS SHALL INCLUDE SPECIFIC DETAILS FOR FOUNDATION ATTACHMENTS, FLASHINGS AT THE EXISTING METAL BUILDING (PUMP HOUSE), RAIN GUTTERS AND DOWNSPOUTS COORDINATED WITH EXISTING GUTTERS AND DOWNSPOUTS, FRAMING TO ACCEPT VENT FAN AND LOUVER, SECURITY LIGHTS, DOOR FRAMING AND DOOR HARDWARE.

C. CONTRACTOR VERIFY DIMENSIONS PRIOR TO FABRICATION.

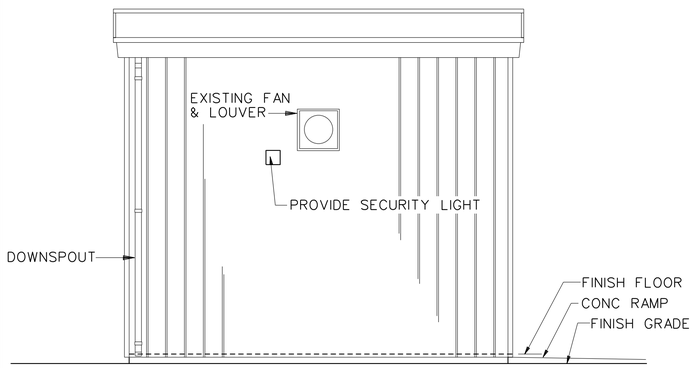

F8 / A301 SOUTH ELEVATION
SCALE: 1/4" = 1'-0"

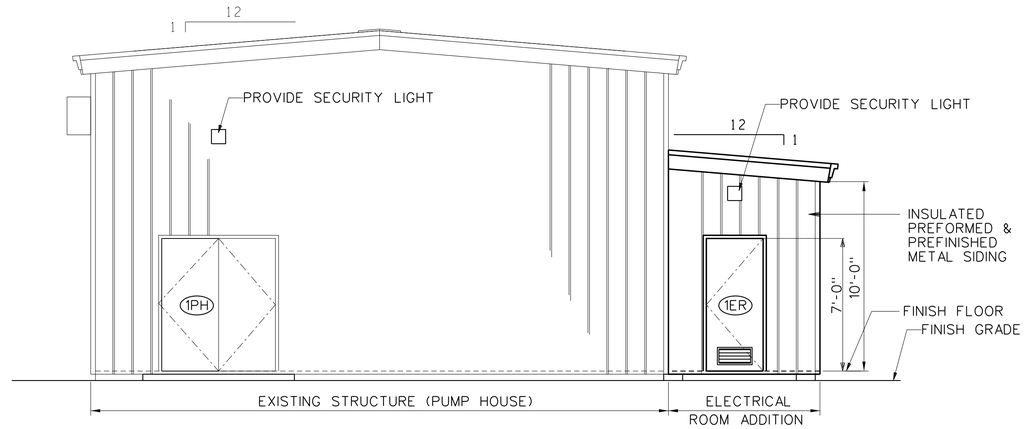

F6 / A301 EAST ELEVATION
SCALE: 1/4" = 1'-0"

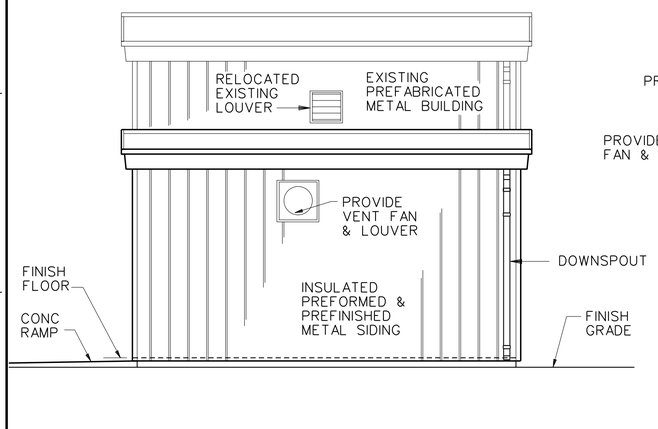

B8 / A301 NORTH ELEVATION
SCALE: 1/4" = 1'-0"

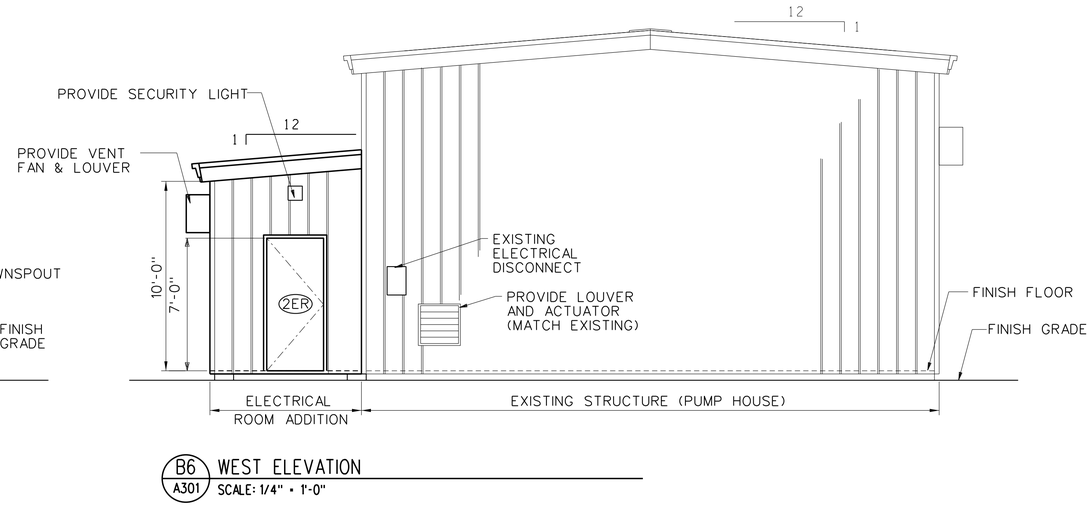

B6 / A301 WEST ELEVATION
SCALE: 1/4" = 1'-0"

4' 0 4' 8'
SCALE: 1/4" = 1'-0"

REV	APPROVED DATE	DESCRIPTION	JCN	REDLINE DATE	APVD

DEPARTMENT OF TRANSPORTATION
FEDERAL AVIATION ADMINISTRATION
ATO - TECHNICAL OPERATIONS **WESTERN SERVICE AREA**

ARTCC

MAJOR MECHANICAL MODERNIZATION
PUMP HOUSE
EXTERIOR ELEVATIONS

DENVER LONGMONT CO

REVIEWED BY

SUBMITTED BY: PAUL TULENKO — PROJECT ENGINEER

APPROVED BY: CALLEN R. COLLINS — MGR: ENGINEERING - SEATTLE

DO NOT SIGN

DESIGNED RC
DRAWN JA
CHECKED

ISSUED BY: ENGINEERING SERVICES ENROUTE/FSS

DATE
JCN 1401893
DRAWING NO ZDV-1401893-A301
REV

ISSUED FOR:

zdv-1401893-a301.dgn 7/11/2018 3:46:35 PM John CTR Allen

EDM: zdv-1401893-a301.dgn

DRAWING PRODUCED ON WSA MICROSTATION SYSTEM

GENERAL SHEET NOTES:

A. GENERAL REQUIREMENTS FOR THE ELECTRICAL ROOM ADDITION PREFABRICATED METAL BUILDING SYSTEM AS SHOWN ARE MINIMUM REQUIREMENTS.

B. CONTRACTOR SHALL SUBMIT FOR APPROVAL MANUFACTURER'S PRODUCT DATA AND SHOP DRAWINGS FOR THE PREFABRICATED METAL BUILDING ELECTRICAL ROOM ADDITION. SHOP DRAWINGS SHALL INCLUDE SPECIFIC DETAILS FOR FOUNDATION ATTACHMENTS, FLASHINGS AT THE EXISTING METAL BUILDING (PUMP HOUSE), RAIN GUTTERS AND DOWNSPOUTS COORDINATED WITH EXISTING GUTTERS AND DOWNSPOUTS, FRAMING TO ACCEPT VENT FAN AND LOUVER, SECURITY LIGHTS, DOOR FRAMING AND DOOR HARDWARE.

C. CONTRACTOR VERIFY DIMENSIONS PRIOR TO FABRICATION.

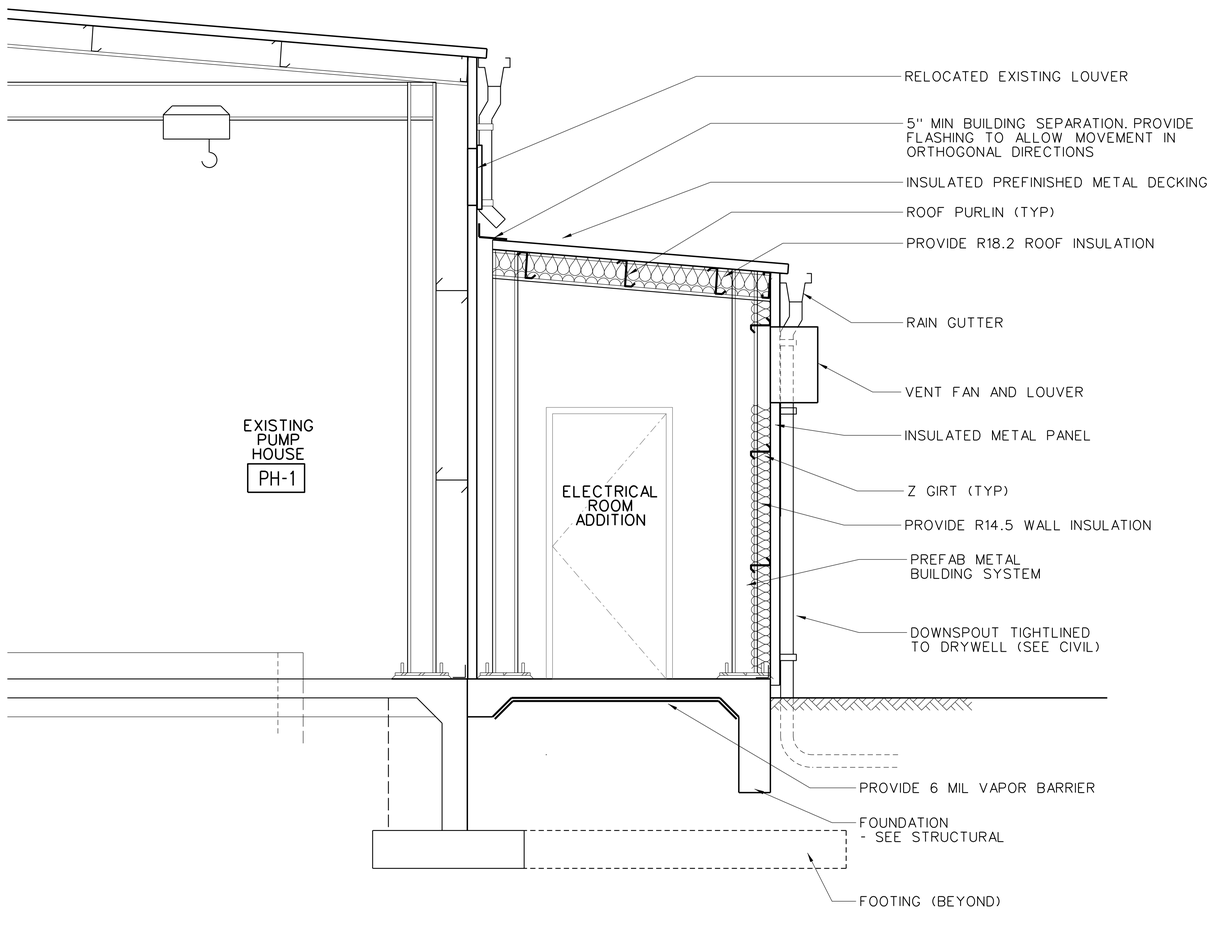

B8 / A302 SECTION THROUGH ADDITION
SCALE: 1/2" = 1'-0"

1' 0 1' 2' 5'
SCALE: 1/2" = 1'-0"

REV	APPROVED DATE	DESCRIPTION	JCN	REDLINE DATE	APVD

DEPARTMENT OF TRANSPORTATION
FEDERAL AVIATION ADMINISTRATION
ATO - TECHNICAL OPERATIONS **WESTERN SERVICE AREA**

ARTCC

MAJOR MECHANICAL MODERNIZATION
PUMP HOUSE
SECTIONS AND DETAILS

DENVER LONGMONT CO

REVIEWED BY

SUBMITTED BY: PAUL TULENKO — PROJECT ENGINEER

APPROVED BY: CALLEN R. COLLINS — MGR: ENGINEERING - SEATTLE

DO NOT SIGN

DESIGNED RC
DRAWN JA
CHECKED

ISSUED BY: ENGINEERING SERVICES ENROUTE/FSS

DATE
JCN 1401893
DRAWING NO ZDV-1401893-A302
REV

ISSUED FOR:

DRAWING PRODUCED ON WSA MICROSTATION SYSTEM

EDM: zdv-1401893-a302.dgn

zdv-1401893-a302.dgn
7/11/2018 3:44:46 PM John (CTR) Allen

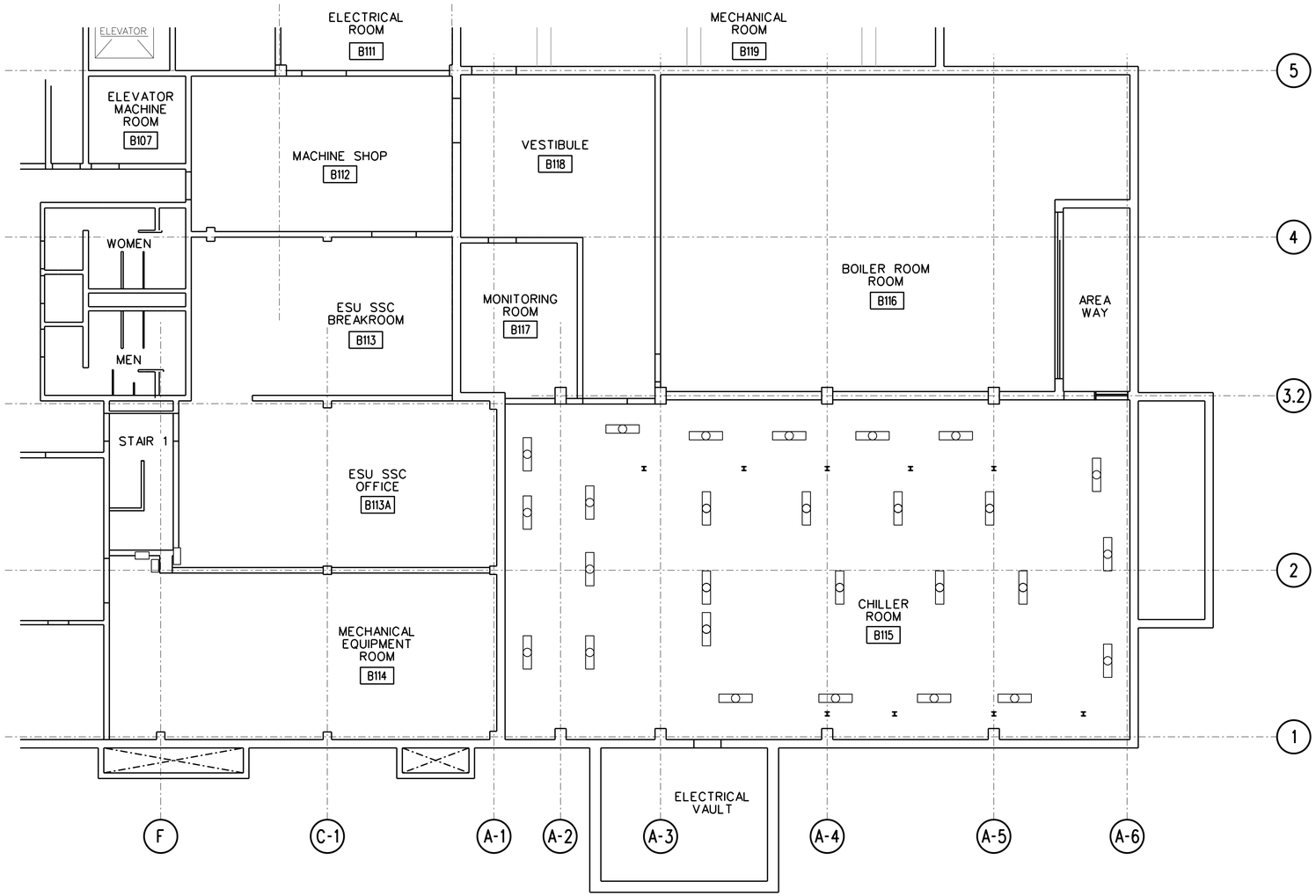

B7 / A501 BASEMENT ROOM B115 REFLECTED CEILING PLAN

SCALE: 1/8" = 1'-0"

8' 0 8' 16'

SCALE: 1/8" = 1'-0"

GENERAL SHEET NOTES:

A. PROTECT EXISTING OPERATIONAL AND NON-OPERATIONAL EQUIPMENT FROM DUST, DEBRIS AND WATER. EQUIPMENT IS CRITICAL TO THE OPERATION AND FUNCTION OF THIS FACILITY.

B. SEE ELECTRICAL SHEETS FOR LIGHT FIXTURES.

KEY PLAN:

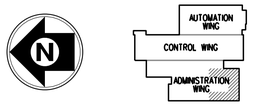

REV	APPROVED DATE	DESCRIPTION	JCN	REDLINE DATE	APVD

DEPARTMENT OF TRANSPORTATION
FEDERAL AVIATION ADMINISTRATION
ATO - TECHNICAL OPERATIONS WESTERN SERVICE AREA

ARTCC

MAJOR MECHANICAL MODERNIZATION
BASEMENT ROOM B115
REFLECTED CEILING PLAN

DENVER LONGMONT CO

REVIEWED BY

SUBMITTED BY: PAUL TULENKO — PROJECT ENGINEER

APPROVED BY: CALLEN R. COLLINS — MGR: ENGINEERING - SEATTLE

DO NOT SIGN

DESIGNED: RC
DRAWN: JA
CHECKED:

ISSUED BY: ENGINEERING SERVICES ENROUTE/FSS

DATE
JCN: 1401893
DRAWING NO: ZDV-1401893-A501
REV

ISSUED FOR:

zdv-1401893-a501.dgn
6/26/2018 3:02:53 PM John CTR Allen

EDM: zdv-1401893-a501.dgn

DRAWING PRODUCED ON WSA MICROSTATION SYSTEM

SHEET NOTES:

1. PAINT WALLS AND CEILING WHERE DAMAGED BY THE WORK, OR WHERE EQUIPMENT HAS BEEN REMOVED THAT EXPOSES FINISHES THAT DO NOT MATCH ADJACENT SURFACES. COORDINATE WITH COR.

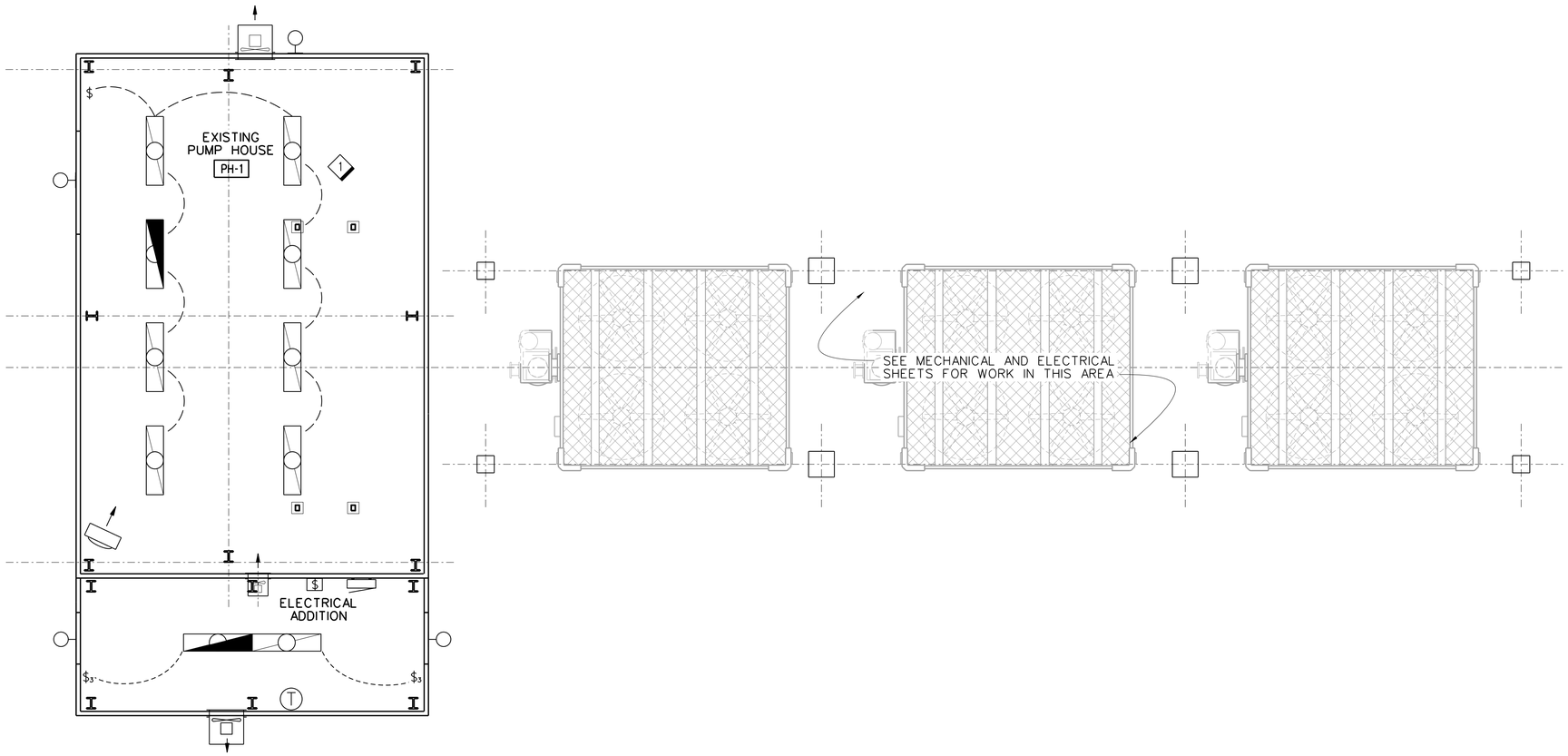

C7 / A502 COOLING TOWER PUMP HOUSE REFLECTED CEILING PLAN
SCALE: 1/4" = 1'-0"

4' 0 4' 8'
SCALE: 1/4" = 1'-0"

REV	APPROVED DATE	DESCRIPTION	JCN	REDLINE DATE	APVD

DEPARTMENT OF TRANSPORTATION
FEDERAL AVIATION ADMINISTRATION
ATO - TECHNICAL OPERATIONS — WESTERN SERVICE AREA

ARTCC

MAJOR MECHANICAL MODERNIZATION
COOLING TOWER/PUMP HOUSE
REFLECTED CEILING PLAN

DENVER — LONGMONT — CO

REVIEWED BY

SUBMITTED BY: PAUL TULENKO — PROJECT ENGINEER
APPROVED BY: CALLEN R. COLLINS — MGR: ENGINEERING - SEATTLE

DO NOT SIGN

DESIGNED: RC
DRAWN: JA
CHECKED:

ISSUED BY: ENGINEERING SERVICES ENROUTE/FSS

DATE:
JCN: 1401893
DRAWING NO: ZDV-1401893-A502
REV:

ISSUED FOR:

DRAWING PRODUCED ON WSA MICROSTATION SYSTEM

rsh-1401893-a502.dgn 6/26/2018 3:12:01 PM John CTR Allen

EDM: zdv-1401893-a502.dgn

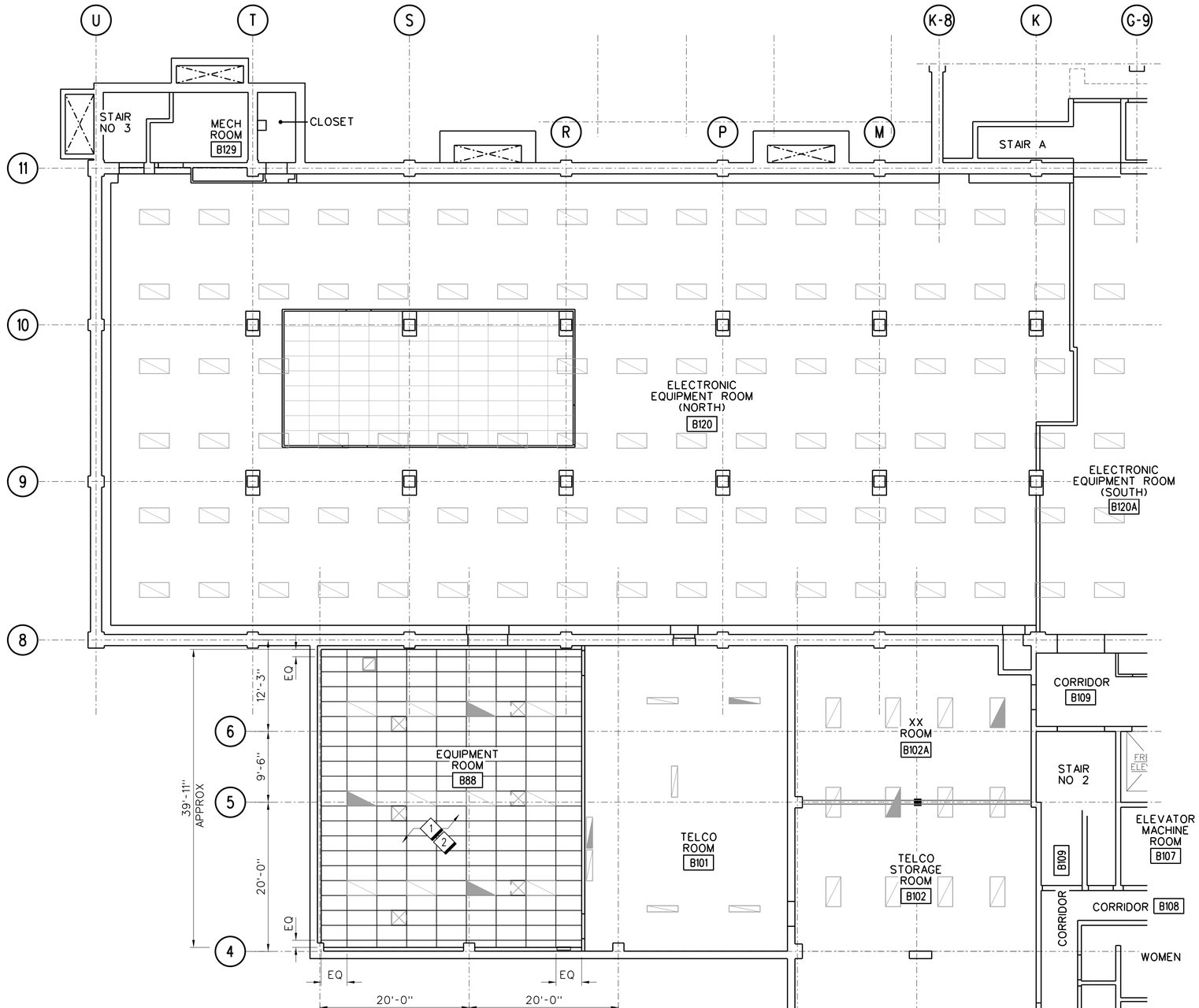

A8 / A511 BASEMENT ROOM B88 REFLECTED CEILING PLAN

SCALE: 1/8" = 1'-0"

8' 0 8' 16'

SCALE: 1/8" = 1'-0"

GENERAL NOTES:

A. ELECTRONIC EQUIPMENT ROOM B120 IS AN OCCUPIED SPACE THAT CONTAINS SENSITIVE ELECTRONIC EQUIPMENT THAT MUST REMAIN OPERATIONAL 24/7. PROTECT EQUIPMENT FROM DAMAGE, DUST AND JOSTLING. REFER TO FLOOR PLAN FOR APPROXIMATE LOCATION OF EQUIPMENT.

B. REFER TO HVAC, FIRE SUPPRESSION, FIRE DETECTION, ELECTRICAL, AND PA SYSTEM PLANS FOR ADDITIONAL EQUIPMENT INFORMATION AND LAYOUT.

SHEET NOTES:

1. PROVIDE APC CEILING PANELS AND GRID SYSTEM @ 9'-0" AFF. REFER TO ELECTRICAL FOR LOCATIONS OF NEW LIGHT FIXTURES. COORDINATE WITH ELECTRICAL CONTRACTOR FOR LIGHT FIXTURE MOUNTING REQUIREMENTS.
2. PROVIDE MARKING AND IDENTIFICATION ABOVE SUSPENDED ACOUSTICAL CEILING TO IDENTIFY FIRE-STOPPING TREATMENT AND FIRE BARRIERS.

KEY PLAN:

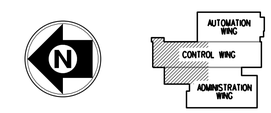

REV	APPROVED DATE	DESCRIPTION	JCN	REDLINE DATE	APVD

DEPARTMENT OF TRANSPORTATION
FEDERAL AVIATION ADMINISTRATION
ATO - TECHNICAL OPERATIONS WESTERN SERVICE AREA

ARTCC

MAJOR MECHANICAL MODERNIZATION BASEMENT ROOM B88 REFLECTED CEILING PLAN

DENVER LONGMONT CO

REVIEWED BY

SUBMITTED BY: PAUL TULENKO — PROJECT ENGINEER

APPROVED BY: CALLEN R. COLLINS — MGR: ENGINEERING - SEATTLE

DO NOT SIGN

DESIGNED RC
DRAWN JA
CHECKED

ISSUED BY: ENGINEERING SERVICES ENROUTE/FSS

DATE
JCN 1401893
DRAWING NO ZDV-1401893-A511
REV

ISSUED FOR:

DRAWING PRODUCED ON WSA MICROSTATION SYSTEM

zdv-1401893-a511.dgn 6/26/2018 3:18:48 PM John C?R Allen

EDM: zdv-1401893-a511.dgn

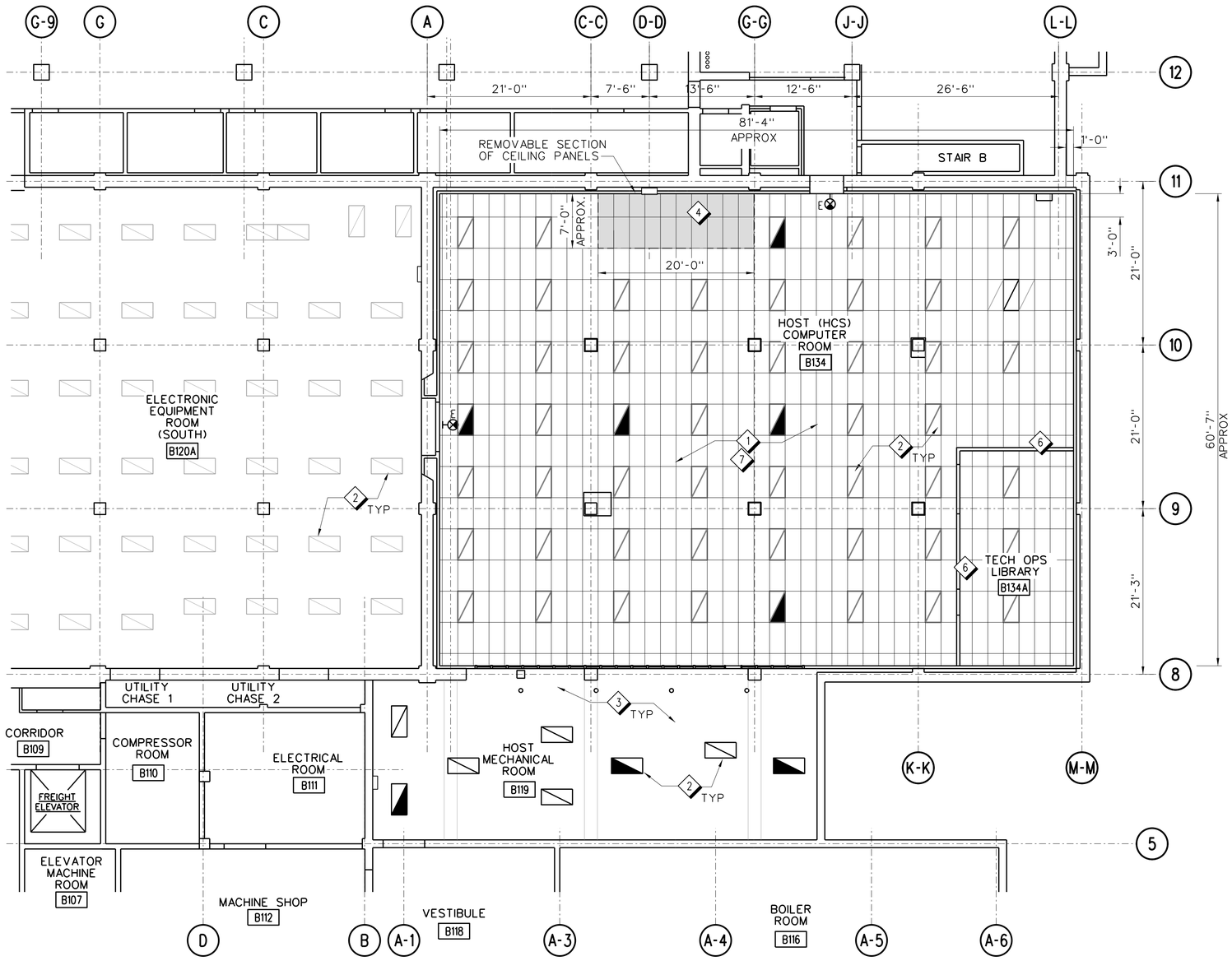

B8 / A512 BASEMENT ROOM B119/B134 REFLECTED CEILING PLAN

SCALE: 1/8" = 1'-0"

8' 0 8' 16'

SCALE: 1/8" = 1'-0"

GENERAL SHEET NOTES:

A. HOST COMPUTER ROOM IS AN OCCUPIED SPACE THAT CONTAINS SENSITIVE ELECTRONIC EQUIPMENT THAT MUST REMAIN OPERATIONAL 24/7. PROTECT EQUIPMENT FROM DAMAGE, DUST AND JOSTLING. REFER TO FLOOR PLAN FOR APPROXIMATE LOCATION OF EQUIPMENT.

SHEET NOTES:

1. PROVIDE ALL CEILING PANELS, CEILING GRID AND PROVIDE SEISMIC BRACING TO CEILING GRID SYSTEM AS REQUIRED BY CODE. SEE DETAILS ON SHEET A602 FOR ADDITIONAL INFORMATION.
2. LIGHT FIXTURE, REFER TO ELECTRICAL FOR LOCATIONS.
3. OPEN TO STRUCTURE.
4. PROVIDE REMOVABLE APC CEILING PANEL/GRID SECTION. PERIMETER OF OPENING SHALL BE REINFORCED WITH METAL STUD SUPPORT AND BRACING. SEE DETAILS ON SHEET A602 FOR ADDITIONAL INFORMATION.
5. REFER TO FINISH SCHEDULE, SHEET A801.
6. PROVIDE SPECIAL CONDITION DETAIL FOR CONSTRUCTION AT GRID INTERFACE AT EXISTING WALL.
7. PROVIDE MARKING AND IDENTIFICATION ABOVE SUSPENDED ACOUSTICAL CEILING TO IDENTIFY FIRE-STOPPING TREATMENT AND FIRE BARRIERS.

KEY PLAN:

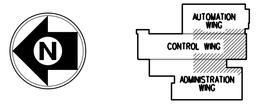

REV	APPROVED DATE	DESCRIPTION	JCN	REDLINE DATE	APVD

DEPARTMENT OF TRANSPORTATION
FEDERAL AVIATION ADMINISTRATION
ATO - TECHNICAL OPERATIONS WESTERN SERVICE AREA

ARTCC

MAJOR MECHANICAL MODERNIZATION
BASEMENT ROOM B119/B134
REFLECTED CEILING PLAN

DENVER LONGMONT CO

REVIEWED BY

SUBMITTED BY: PAUL TULENKO — PROJECT ENGINEER

APPROVED BY: CALLEN R. COLLINS — MGR: ENGINEERING - SEATTLE

DO NOT SIGN

DESIGNED RC
DRAWN JA
CHECKED

ISSUED BY: ENGINEERING SERVICES ENROUTE/FSS

DATE
JCN 1401893
DRAWING NO ZDV-1401893-A512
REV

ISSUED FOR:

DRAWING PRODUCED ON WSA MICROSTATION SYSTEM

EDM: zdv-1401893-a512.dgn

rtc-1401893-a512.dgn 6/26/2018 3:20:52 PM John CTR Allen

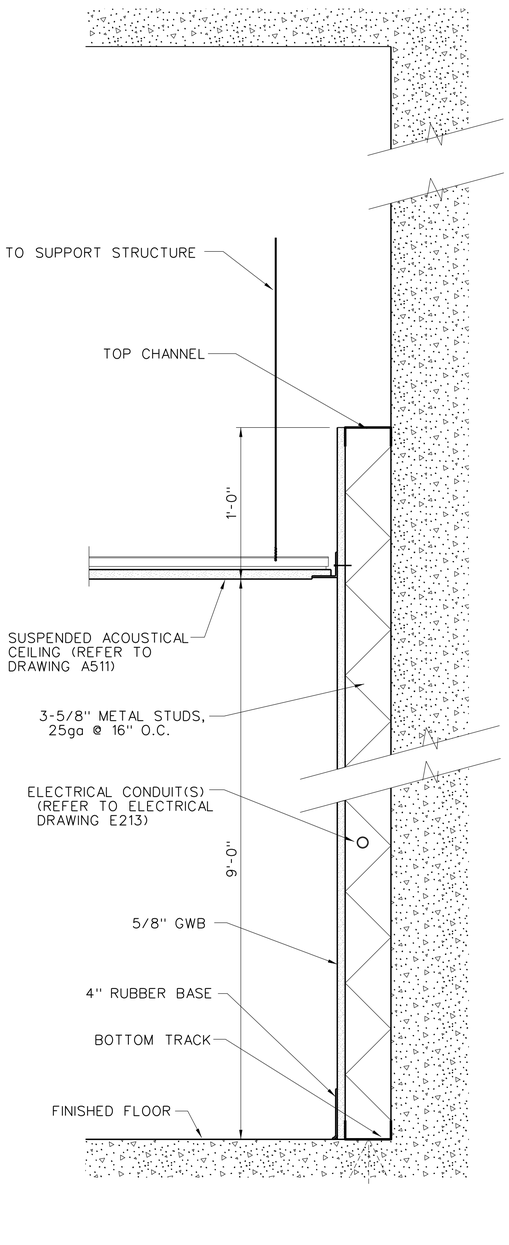

A8 / A601 WALL TYP. @ PERIMETER
SCALE: N.T.S.

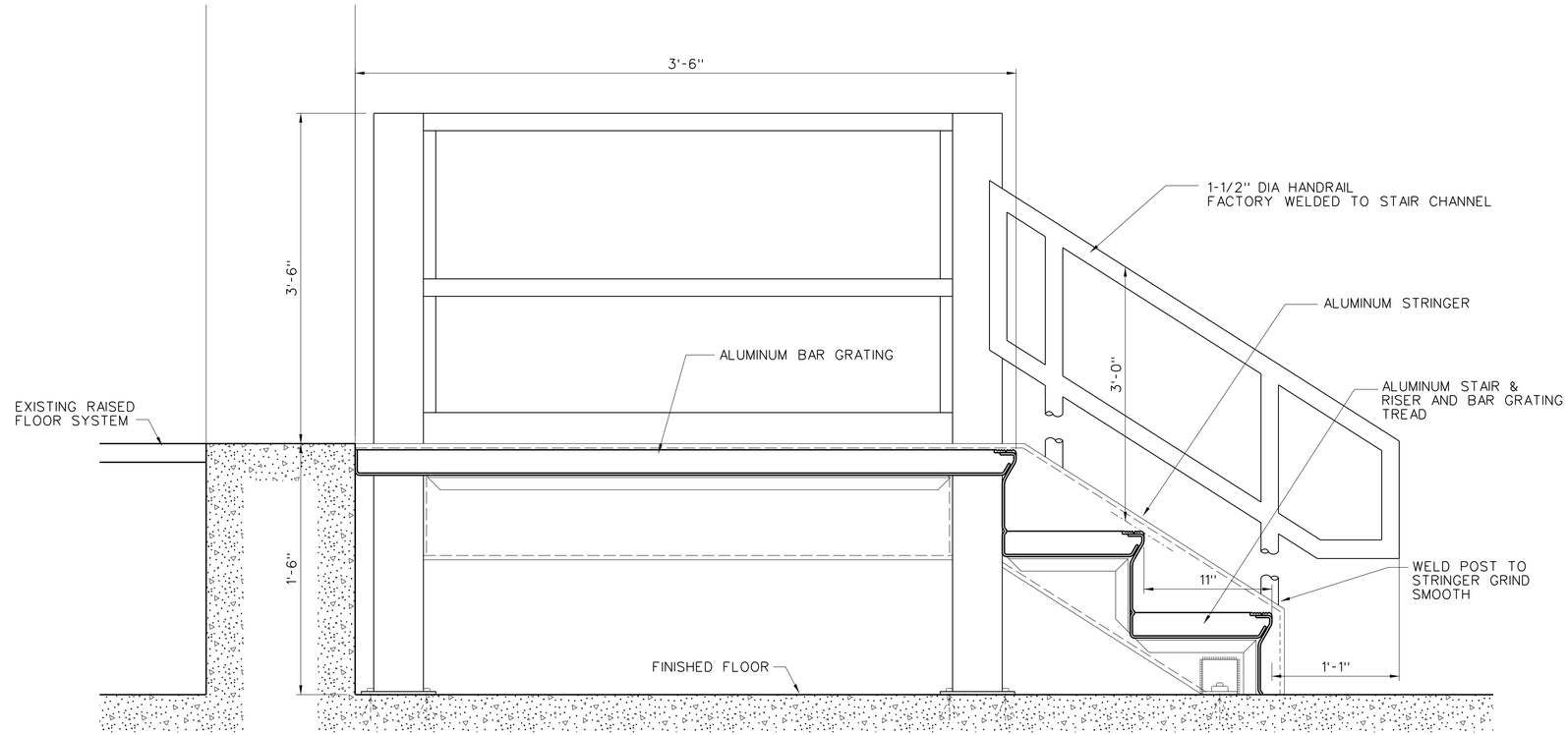

D5 / A601 ROOM B101 ALUMINUM PREFABRICATED STAIR AND LANDING
SCALE: 1" = 1'-0"

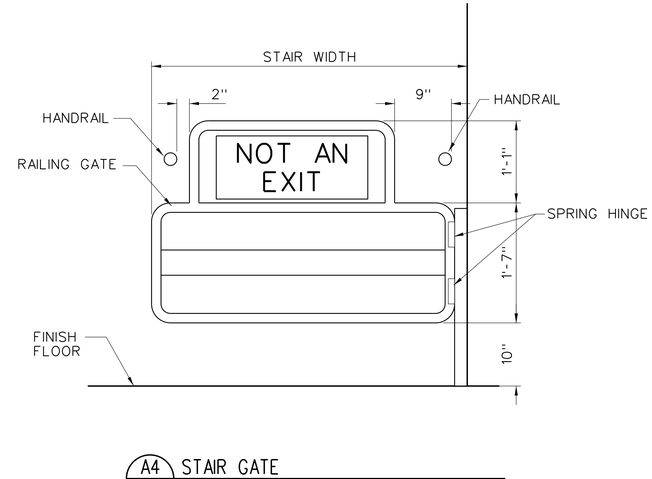

A4 / A601 STAIR GATE
SCALE: N.T.S.

REV	APPROVED DATE	DESCRIPTION	JCN	REDLINE DATE	APVD

DEPARTMENT OF TRANSPORTATION
FEDERAL AVIATION ADMINISTRATION
ATO - TECHNICAL OPERATIONS WESTERN SERVICE AREA

ARTCC
MAJOR MECHANICAL MODERNIZATION

STAIRS AND MISCELLANEOUS DETAILS

DENVER LONGMONT CO

REVIEWED BY
SUBMITTED BY: PAUL TULENKO — PROJECT ENGINEER
APPROVED BY: CALLEN R. COLLINS — MGR: ENGINEERING - SEATTLE
DO NOT SIGN

DESIGNED RC
DRAWN JA
CHECKED
ISSUED BY: ENGINEERING SERVICES ENROUTE/FSS
DATE
JCN 1401893
DRAWING NO ZDV-1401893-A601
REV

ISSUED FOR:

DRAWING PRODUCED ON WSA MICROSTATION SYSTEM

zdv-1401893-a601.dgn 6/26/2018 3:20:47 PM John CTR Allen
EDM: zdv-1401893-a601.dgn

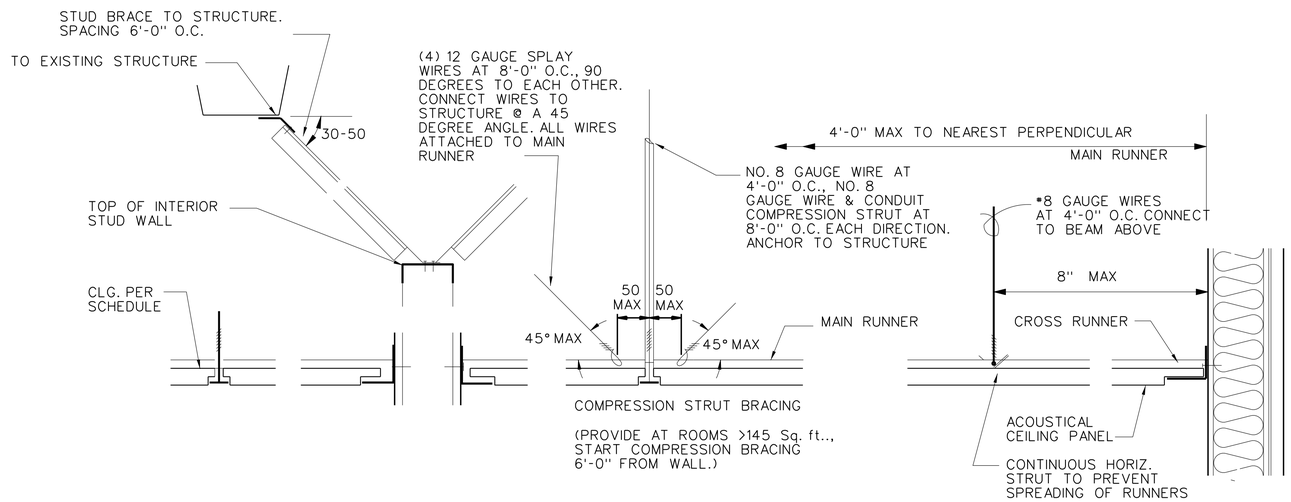

F8 A602 SUSPENDED CEILING/WALL BRACE SYSTEM
SCALE: NTS

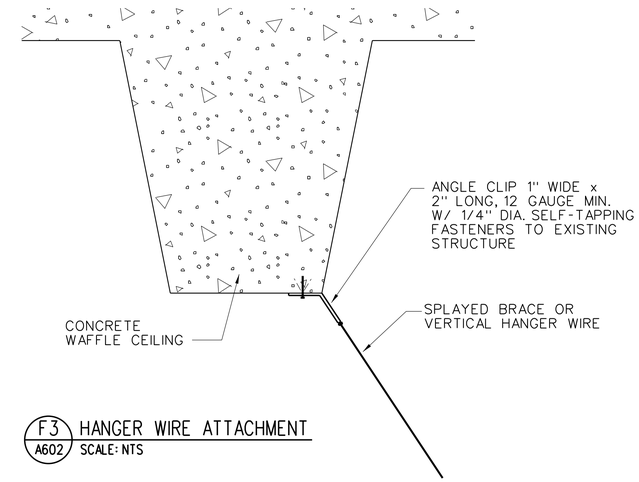

F3 A602 HANGER WIRE ATTACHMENT
SCALE: NTS

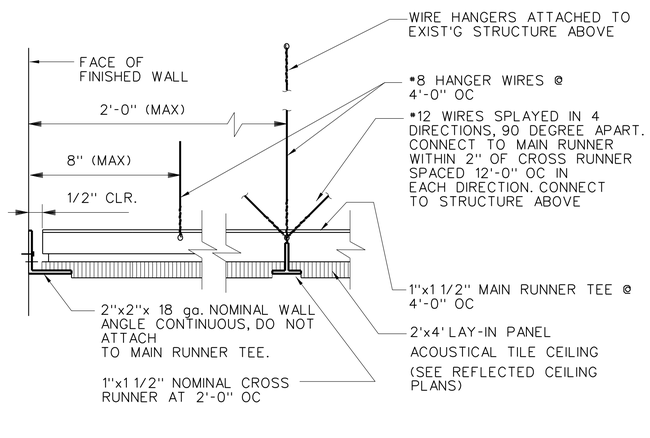

C8 A602 SUSPENDED ACOUSTICAL PANEL CEILING
SCALE: NTS (EXPOSED T-SYSTEM)

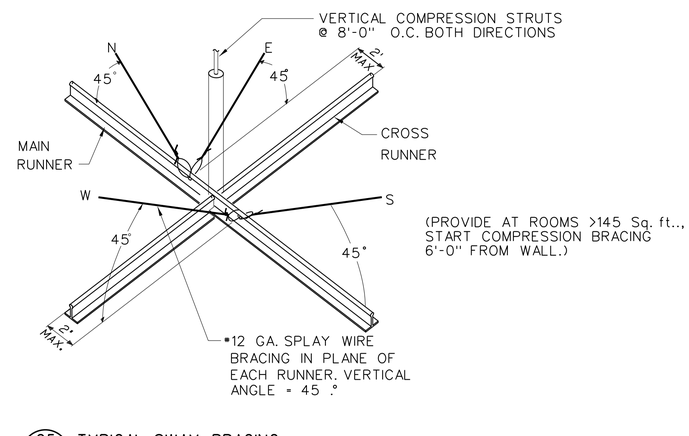

C5 A602 TYPICAL SWAY BRACING
SCALE: NTS

REV	APPROVED DATE	DESCRIPTION	JCN	REDLINE DATE	APVD

DEPARTMENT OF TRANSPORTATION
FEDERAL AVIATION ADMINISTRATION
ATO - TECHNICAL OPERATIONS — WESTERN SERVICE AREA

ARTCC
MAJOR MECHANICAL MODERNIZATION
SUSPENDED CEILING DETAILS

DENVER — LONGMONT — CO

REVIEWED BY
SUBMITTED BY: PAUL TULENKO — PROJECT ENGINEER
APPROVED BY: CALLEN R. COLLINS — MGR: ENGINEERING - SEATTLE
DO NOT SIGN

DESIGNED: RC
DRAWN: JA
CHECKED
ISSUED BY: ENGINEERING SERVICES ENROUTE/FSS
DATE
JCN: 1401893
DRAWING NO: ZDV-1401893-A602
REV

ISSUED FOR:

DRAWING PRODUCED ON WSA MICROSTATION SYSTEM

rdn-1401893-a602.dgn 6/26/2018 3:23:24 PM John CTR Allen
EDM: zdv-1401893-a602.dgn

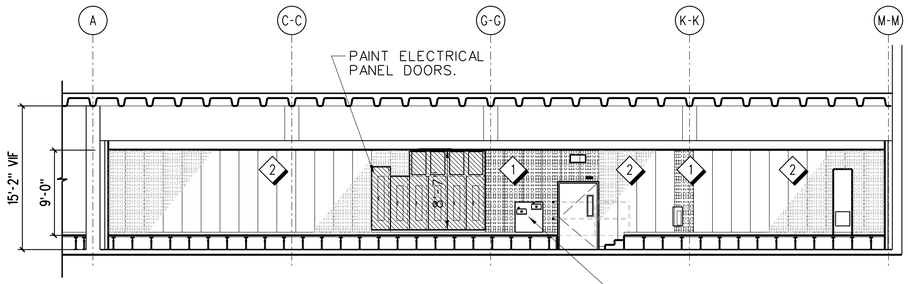

G8 / A701 ELEVATION- HOST EQUIPMENT ROOM B134 - EAST

SCALE: 1/8" = 1'-0"

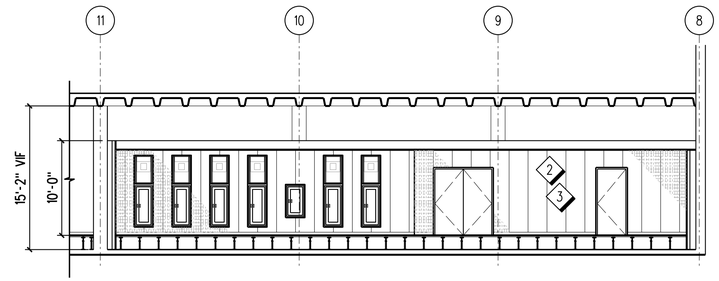

G4 / A701 ELEVATION- HOST EQUIPMENT ROOM B134 - SOUTH

SCALE: 1/8" = 1'-0"

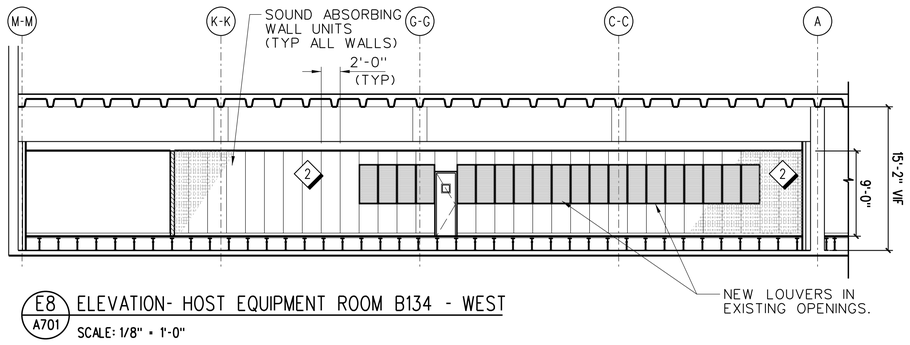

E8 / A701 ELEVATION- HOST EQUIPMENT ROOM B134 - WEST

SCALE: 1/8" = 1'-0"

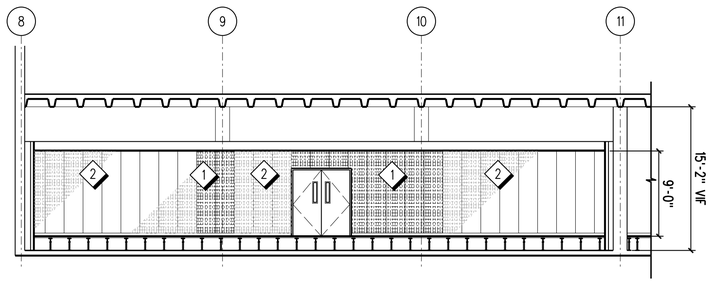

E4 / A701 ELEVATION- HOST EQUIPMENT ROOM B134 - NORTH

SCALE: 1/8" = 1'-0"

SHEET NOTES:

1. PROVIDE ACOUSTICAL WALL PANELS TO REPLACE ACOUSTICAL WALL PANELS THAT WERE DEMOLISHED.
2. CLEAN ALL EXISTING ACOUSTICAL WALL PANELS REMAINING IN PLACE AFTER DEMOLITION OF RED AND ORANGE PANELS.
3. REFER TO FINISH SCHEDULE DRAWING A801 FOR ROOM B134A.

REV	APPROVED DATE	DESCRIPTION	JCN	REDLINE DATE	APVD

DEPARTMENT OF TRANSPORTATION
FEDERAL AVIATION ADMINISTRATION
ATO - TECHNICAL OPERATIONS WESTERN SERVICE AREA

ARTCC

MAJOR MECHANICAL MODERNIZATION

BASEMENT ELEVATIONS AND DETAILS

DENVER LONGMONT CO

REVIEWED BY

SUBMITTED BY: PAUL TULENKO — PROJECT ENGINEER

APPROVED BY: CALLEN R. COLLINS — MGR: ENGINEERING - SEATTLE

DO NOT SIGN

DESIGNED RC
DRAWN JA
CHECKED

ISSUED BY: ENGINEERING SERVICES ENROUTE/FSS

DATE
JCN 1401893
DRAWING NO ZDV-1401893-A701
REV

ISSUED FOR:

EDM: zdv-1401893-a701.dgn

zdv-1401893-a701.dgn 7/12/2018 10:00:29 AM John CTR Allen

DRAWING PRODUCED ON WSA MICROSTATION SYSTEM

ROOM FINISH SCHEDULE

ROOM NO.	ROOM NAME	FLOOR	BASE	WALL ELEVATION DESIGNATION NORTH	EAST	SOUTH	WEST	CEILING TYPE	REMARKS
B88	EQUIPMENT ROOM	VCT	RB-1	PT-1	PT-1	PT-1	PT-1	APC	NOTE 2
B134	HOST (HCS) COMPUTER ROOM	EXIST	RB-1	PT-1/SAWU-1	PT-1/SAWU-1	PT-1/SAWU-1	PT-1/SAWU-1	APC	NOTES 4, 5
B134A	TECH LIBRARY	EXIST	RB-1	EXIST	EXIST	PT-1/SAWU-1	PT-1/SAWU-1	APC	NOTE 7
B119	HOST MECHANICAL ROOM	VCT	RB-1	EXIST	EXIST	EXIST	EXIST	PT-2	NOTE 8
B115	CHILLER ROOM	ST-1	RB-1	PT-4	PT-4	PT-4	PT-4	PT-2	NOTE 1, 3, 5, 6
B116	BOILER ROOM	ST-1	RB-1	EXIST	EXIST	EXIST	EXIST	EXIST	NOTE 1, 3
B118	VESTIBULE AND RAMP	ST-1/ST-2	--	PT-1	PT-1	PT-1	PT-1	EXIST	NOTE 1, 9
PH-1	PUMP HOUSE	S-1	--	EXIST	EXIST	EXIST	EXIST	EXIST	NOTE 4
ER-1	ELECTRICAL ROOM ADDITION	S-1	--	MFFIN	MFFIN	EXIST	MFFIN	MFFIN	

FINISH NOTES:

1. PREPARE FLOOR, AND CONCRETE MAINTENANCE PADS FOR NEW FINISH. VERIFY COMPATIBILITY BETWEEN EXISTING FLOOR FINISH AND NEW FINISH AND TAKE NECESSARY PROCEDURES FOR A NEAT AND DURABLE NEW FLOOR SURFACE. PROTECT EQUIPMENT AND OTHER ITEMS IDENTIFIED BY COR FROM NEW FINISH.
2. PAINT EXPOSED CONCRETE WALLS ABOVE FURRED OUT WALLS PT-1.
3. PAINT CONCRETE MAINTENANCE PADS SAFETY YELLOW.
4. PATCH AND REPAIR WALLS WHERE WORK HAS OCCURED TO MATCH EXISTING.
5. PATCH AND REPAIR WALLS AND CEILING TO RECEIVE FINISHES.
6. PREPARE WALLS AND CEILING TO RECEIVE NEW FINISH. PROTECT EQUIPMENT, COLOR CODED OR PVC JACKETTED PIPING AND COORDINATE WITH COR OTHER ITEMS TO NOT BE PAINTED.
7. RB-1 IS NOT REQUIRED ON DEMOUNTABLE PARTITIONS.
8. FLOOR FINISH IS VCT AT CONCRETE SUBSTRATE.
9. FLOOR FINISH ST-2 APPLIED TO RAMP SURFACE.

INTERIOR COLOR SCHEME SCHEDULE

SURFACE	MATERIALS	DESIGNATION	MANUFACTURER	TYPE / MODEL NUMBER	COLOR	REMARKS
FLOOR	INTERLOCKING TILE	ST-1	ARMORPOXY	TEXTURED / SUPRATILE	LIGHT GRAY	
FLOOR	INTERLOCKING TILE	ST-2	ARMORPOXY	COIN PATTERN / SUPRATILE	LIGHT GRAY	RAMP
FLOOR	VINYL TILE	VCT	ALTRO	QUARTZ - HOMOGENEOUS	AQT9322 "SAND CD"	
CONCRETE FLOOR	CONCRETE SEALER	S-1	SHERWIN WILLIAMS	H&C WETLOOK	CLEAR	
BASE	RUBBER	RB-1	ROPPE FLOORING	P193	BLACK-BROWN	
WALLS	PAINT	PT-1	SHERWIN WILLIAMS	SW6148	WOOL SKEIN	SATIN FINISH
CEILING	PAINT	PT-2	SHERWIN WILLIAMS	SW7100 - DURATION HOME ANTI-MICROBIAL	ARCADE WHITE	SEMI-GLOSS
HM DOOR AND FRAME	PAINT	PT-3	DIAMOND VOGEL	FINIUM DTM-AT ACRYLIC (SW7048)	URBANE BRONZE	SEMI-GLOSS
WALLS	PAINT	PT-4	SHERWIN WILLIAMS	SW6148	WOOL SKEIN	SEMI-GLOSS
CEILING	ACOUSTIC CEILING PANEL	APC	ARMSTRONG	ULTIMA 1914 HRC TEGULAR	WHITE	24" x 48"
PREFAB BUILDING	EXTERIOR SURFACES	MFFIN	---	MANUFACTURER'S FINISH	MATCH EXISTING	COR APPROVAL
SOUND ABSORPTION WALL UNIT (ACOUSTIC WALL PANEL)	FABRIC	SAWU-1	GUILFORD OF MAINE	FRAMEWORK/2762-2687	BEIGE	STAIN RESISTANT

DOOR SCHEDULE

DOOR NO.	DOOR TYPE	DOOR MATERIAL	NOMINAL SIZE WIDTH	HEIGHT	DEPTH	HANDING	FRAME TYPE	FRAME MATERIAL	DETAILS JAMB	HEAD	THRESHOLD	FIRE RATING LABEL (MINUTES)	HARDWARE SET NO.	NOTE NUMBER	DRAWING REFERENCE	ENTER TO ROOM NUMBER(S) - AREAS
11	D2	HM	PR 3'-0"	7'-0"	1-3/4"	LHR/RHR	Exist					45	10	2, 3, 4, 5, 8	A211 BASEMENT NORTH	B102 TELCO
M-14	D4	HM	3'-0"	7'-0"	1-3/4"	RHR	Exist	AL					1	3, 4, 7, 8	A201 BOILER/CHILLER AREA	Boiler B116
M-15	D6	HM	3'-0"	7'-0"	1-3/4"	RHR	Exist	AL					5	4, 7, 8	A201 BOILER/CHILLER AREA	Chiller B115
17	D2	HM	PR 3'-0"	7'-0"	1-3/4"	LHR/RHR	F1	HM				90	9	5, 10	A201 BOILER/CHILLER AREA	MCCs B112
18	D2	HM	PR 3'-0"	7'-0"	1-3/4"	LHR/RHR	F1	HM				90	9	5, 10	A201 BOILER/CHILLER AREA	B118 Vestibule
20	D1	HM	PR 3'-0"	7'-0"	1-3/4"	RHR	F1	HM				45	6	1, 5, 6, 10	A201 BOILER/CHILLER AREA	Chiller B115
22	D4	HM	3'-0"	7'-0"	1-3/4"	LHR	Exist					45	7	1, 2, 4, 5, 8	A201 BOILER/CHILLER AREA	B118 Ramp
23	D4	HM	PR 3'-0"	7'-0"	1-3/4"	LHR	F1	HM				45	8	3, 5, 8, 10	A211 BASEMENT NORTH	IT B102A
25	D1	HM	PR 3'-0"	7'-0"	1-3/4"	LH/RH	Exist					45	4	3, 4, 5, 6, 8	A211 BASEMENT NORTH	B120
27	D4	HM	3'-0"	7'-0"	1-3/4"	LH	F1	HM				90	7	5, 8, 10	A211 BASEMENT NORTH	TELCO B101
30	D2	HM	PR 3'-0"	7'-0"	1-3/4"	LHR/RHR	F1	HM			X	90	2	3, 5, 8, 10	A211 BASEMENT NORTH	B88
35	Reuse Existing						F1	HM				90		5, 10	A211 BASEMENT NORTH	B120
36	D4	HM	3'-0"	7'-0"	1-3/4"	LHR	F1	HM				45	8	2, 5, 8, 10	A211 BASEMENT NORTH	Mech. B129
37	D4	HM	3'-0"	7'-0"	1-3/4"	LHR	Exist					45	8	2, 4, 5, 8	A211 BASEMENT NORTH	Closet
40	D1	HM	PR 2'-6"	7'-0"	1-3/4"	LHR/RHR	F1	HM				90	11	5, 6,8,9,10	A211 BASEMENT NORTH	Corridor B109
43	D4	HM	3'-0"	7'-0"	1-3/4"	LHR	F1	HM				45	8	3, 5, 8, 10	A201 BOILER/CHILLER AREA	Corridor B108
44	D2	HM	PR 3'-0"	7'-0"	1-3/4"	LHR/RHR	F1	HM				45	9	5, 10	A201 BOILER/CHILLER AREA	Electrical B111
45	D2	HM	PR 3'-0"	7'-0"	1-3/4"	RHR	Exist				X	90	9	4, 5, 8	A201 BOILER/CHILLER AREA	HOST Mech. B119
46	D4	HM	2'-0"	6'-8"	1-3/4"	LHR	F1	HM			X	90	7	5, 8, 10	A212 BASEMENT SOUTH	HOST B134
49	D3	HM	4'-0"	7'-0"	1-3/4"	RHR	Exist					90	8	3, 4, 5, 6, 8	A212 BASEMENT SOUTH	HOST B134
50	D1	HM	PR 3'-0"	7'-0"	1-3/4"	LHR/RHR	Exist					45	6	3, 4, 5, 6, 8	A212 BASEMENT SOUTH	HOST B134
51	D1	HM	PR 3'-0"	7'-0"	1-3/4"	LHR/RHR	Exist					90	3	3, 4, 5, 6, 8	A211 BASEMENT NORTH	B120A
52	D1	HM	PR 3'-0"	7'-0"	1-3/4"	LHR/RHR	F1	HM				90	4	3, 5, 6, 8, 10	A211 BASEMENT NORTH	B120A
53	D1	HM	PR 3'-0"	7'-0"	1-3/4"	LHR/RHR	F1	HM				90	11	5, 6, 8, 9, 10	A211 BASEMENT NORTH	Corridor B109
56	D2	HM	PR 3'-0"	7'-0"	1-3/4"	LHR/RHR	Exist					90	9	2, 4, 5, 8	A211 BASEMENT NORTH	U-Chase 1
57	D2	HM	PR 3'-0"	7'-0"	1-3/4"	LHR/RHR	Exist					90	9	2, 4, 5, 8	A212 BASEMENT SOUTH	U-Chase 2
1ER	D5	HM	3'-0"	7'-0"	1-3/4"	LHR	F1	HM					12	5, 7	A301 PUMPHOUSE	To Elect. Addition
2ER	D4	HM	3'-0"	7'-0"	1-3/4"	RHR	F1	HM					12	5, 7	A301 PUMPHOUSE	To Elect. Addition
1PH	D2	HM	PR 3'-0"	7'-0"	1-3/4"	LHR/RHR	Exist						12	5, 7	A301 PUMPHOUSE	To Pumphouse
DOOR, DOOR FRAME AND HARDWARE REPLACEMENT (OPTION)																
4	D5	HM	3'-0"	7'-0"	1-3/4"	RH	Exist	HM						4, 5, 8,11	A211 BASEMENT NORTH	Corridor B109
5	D3	HM	3'-0"	7'-0"	1-3/4"	RHR	F1	HM				90	17	5, 10	A201 BOILER/CHILLER AREA	Corridor B109
6	D4	HM	3'-0"	7'-0"	1-3/4"	LH	F1	HM				90	8	5, 10	A201 BOILER/CHILLER AREA	STAIR 1
12	D5	HM	3'-0"	7'-0"	1-3/4"	RH	Exist	HM						4, 5, 8, 11	A211 BASEMENT NORTH	Corridor B109
13	D5	HM	3'-0"	7'-0"	1-3/4"	LHR	Exist	HM						4, 5, 8, 11*	A211 BASEMENT NORTH	Corridor B109
19	D4	HM	3'-0"	7'-0"	1-3/4"	RH	Exist						15	4, 5, 13	A201 BOILER/CHILLER AREA	B118
41	D4	HM	2'-6"	7'-0"	1-3/4"	LH	Exist					90	16	4, 5	A212 BASEMENT SOUTH	Corridor B109
54	D4	HM	3'-0"	7'-0"	1-3/4"	LHR	F1	HM				90	13	4, 5, 10, 12	A212 BASEMENT SOUTH	Corridor B109
55	D4	HM	3'-0"	7'-0"	1-3/4"	LHR	F1	HM				90	14	4, 5, 10	A212 BASEMENT SOUTH	Corridor B109
DOOR AND FRAME PAINTING ONLY (OPTION)																
1	D4	WD	2'-6"	4'-8"			F1	WD					5		A211 BASEMENT NORTH	STAIR 1
EXC	D3	HM	3'-6"	7'-0"			F1	HM					5		A211 BASEMENT NORTH	B109 (EXERCISE)
TEL	D4	HM	2'-0"	7'-0"			F1	HM					5		A211 BASEMENT NORTH	B120 (TELCO)

DOOR SCHEDULE NOTES:

1. Connect to refrigerant leak detection system.
2. Reuse cast-in-place HM frame.
3. Coordinate with FAA's SSDI Contractor for door access control system.
4. Coordinate hardware with existing frame.
5. Paint doors and frames PT-3 unless noted otherwise.
6. Fire rated doors shall have fire rated safety glass.
7. Exterior insulated door.
8. May reuse existing frame.
9. These fire door(s) are normally open and shall be interfaced with the fire alarm control panel (FACP), and shall include appropriate releasing/hold-open devices and coordinating door hardware.
10. Replace with fire rated frame.
11. Reuse existing hardare. *Replace closer only.
12. Reuse existing lockset and closer. Replace hinges only.
13. Reuse existing closer and door stop. Replace lockset and hinges only.

DOOR TYPES

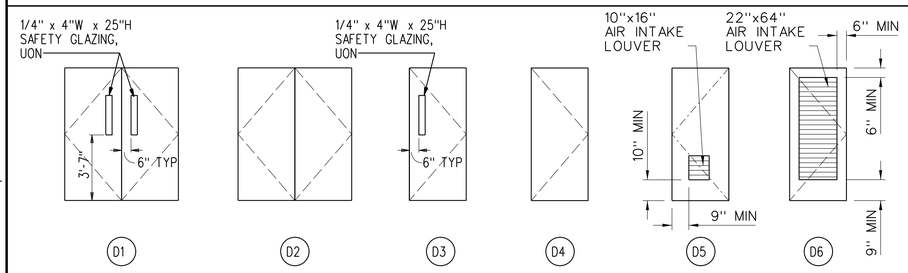

FRAME TYPES

NOTE: FRAMES ARE HM (HOLLOW METAL) UNLESS NOTED AS AL (ALUMINUM)

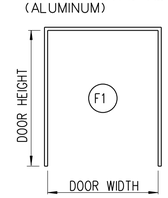

THRESHOLDS

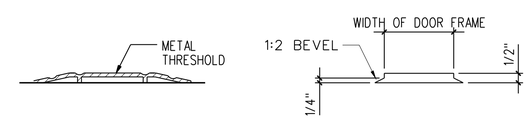

REV	APPROVED DATE	DESCRIPTION	JCN	REDLINE DATE	APVD

DEPARTMENT OF TRANSPORTATION
FEDERAL AVIATION ADMINISTRATION
ATO - TECHNICAL OPERATIONS WESTERN SERVICE AREA

ARTCC
MAJOR MECHANICAL MODERNIZATION

DOOR AND FINISH SCHEDULES

DENVER LONGMONT CO

REVIEWED BY
SUBMITTED BY: PAUL TULENKO — PROJECT ENGINEER
APPROVED BY: CALLEN R. COLLINS — MGR: ENGINEERING - SEATTLE
DO NOT SIGN
DESIGNED RC
DRAWN JA
CHECKED
ISSUED BY: ENGINEERING SERVICES ENROUTE/FSS
DATE
JCN 1401893
DRAWING NO ZDV-1401893-A801
REV

ISSUED FOR:

rb-1401893-a801.dgn 7/2/2018 11:05:30 AM John CTR Allen

EDM: zdv-1401893-a801.dgn

DRAWING PRODUCED ON WSA MICROSTATION SYSTEM

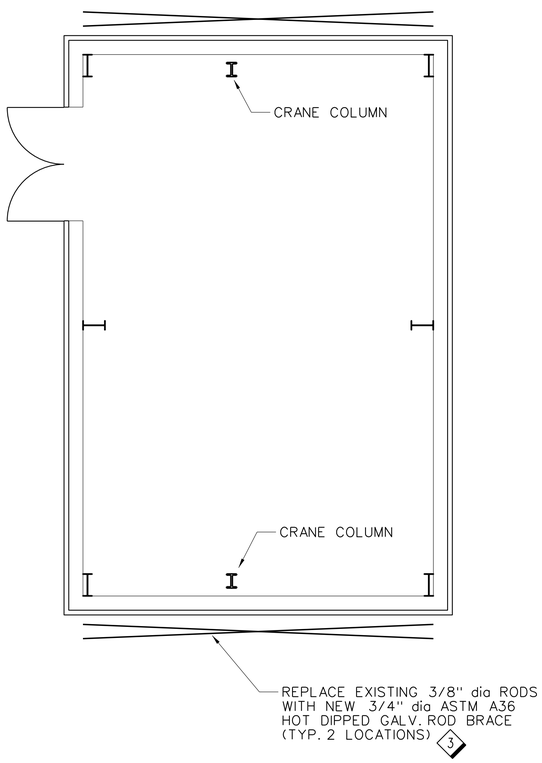

B7 / S101 PUMP HOUSE FLOOR PLAN
SCALE: 1/4" = 1'-0"

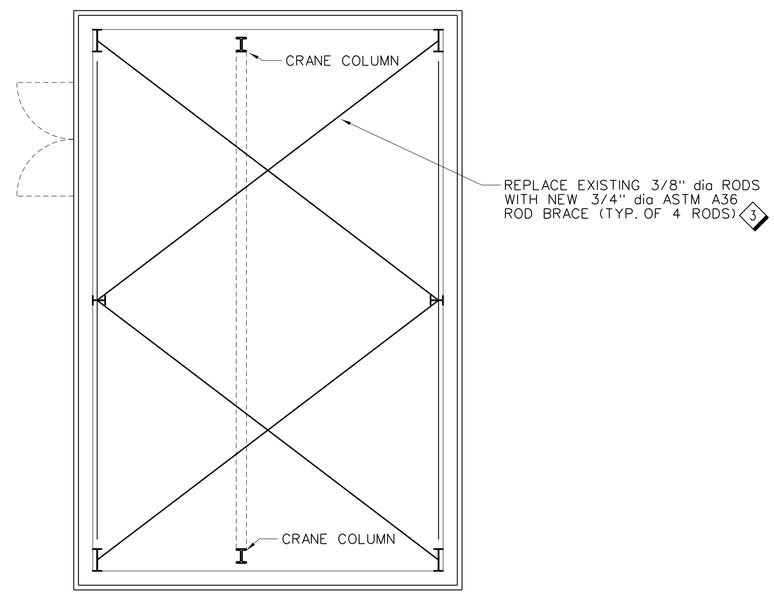

B5 / S101 PUMP HOUSE ROOF PLAN
SCALE: 1/4" = 1'-0"

4' 0 4' 8'
SCALE: 1/4" = 1'-0"

SHEET NOTES:

1. REMOVE GUTTERS AND WALL PANELS AS NEEDED TO ACCESS THE ENDS OF THE ROD BRACING.
2. REINSTALLED GUTTERS AND PANELS SHALL BE SEALED TO PREVENT RAIN WATER INTRUSION.
3. 1/2" dia ROD GRADE 75 HOT DIPPED GALV. MAY BE USED AS REPLACEMENT RODS.
4. DURING REPLACEMENT OF THE ROD BRACING, THE BUILDING SHALL BE PROTECTED BY OTHER BRACING AND BALANCING TO PREVENT COLLAPSE.

REV	APPROVED DATE	DESCRIPTION	JCN	REDLINE DATE	APVD

DEPARTMENT OF TRANSPORTATION
FEDERAL AVIATION ADMINISTRATION
ATO - TECHNICAL OPERATIONS WESTERN SERVICE AREA

ARTCC

MAJOR MECHANICAL MODERNIZATION PUMP HOUSE PREFAB METAL BUILDING SEISMIC RETROFIT

DENVER LONGMONT CO

REVIEWED BY

SUBMITTED BY: PAUL TULENKO (DO NOT SIGN)
PROJECT ENGINEER

APPROVED BY: CALLEN R. COLLINS (DO NOT SIGN)
MGR: ENGINEERING - SEATTLE

DESIGNED RS
DRAWN JA
CHECKED

ISSUED BY: ENGINEERING SERVICES ENROUTE/FSS

DATE
JCN 1401893
DRAWING NO ZDV-1401893-S101
REV

ISSUED FOR:

DRAWING PRODUCED ON WSA MICROSTATION SYSTEM

rsb-1401893-s101.dgn 6/27/2018 8:33:13 AM John CTR Allen

EDM: zdv-1401893-s101.dgn

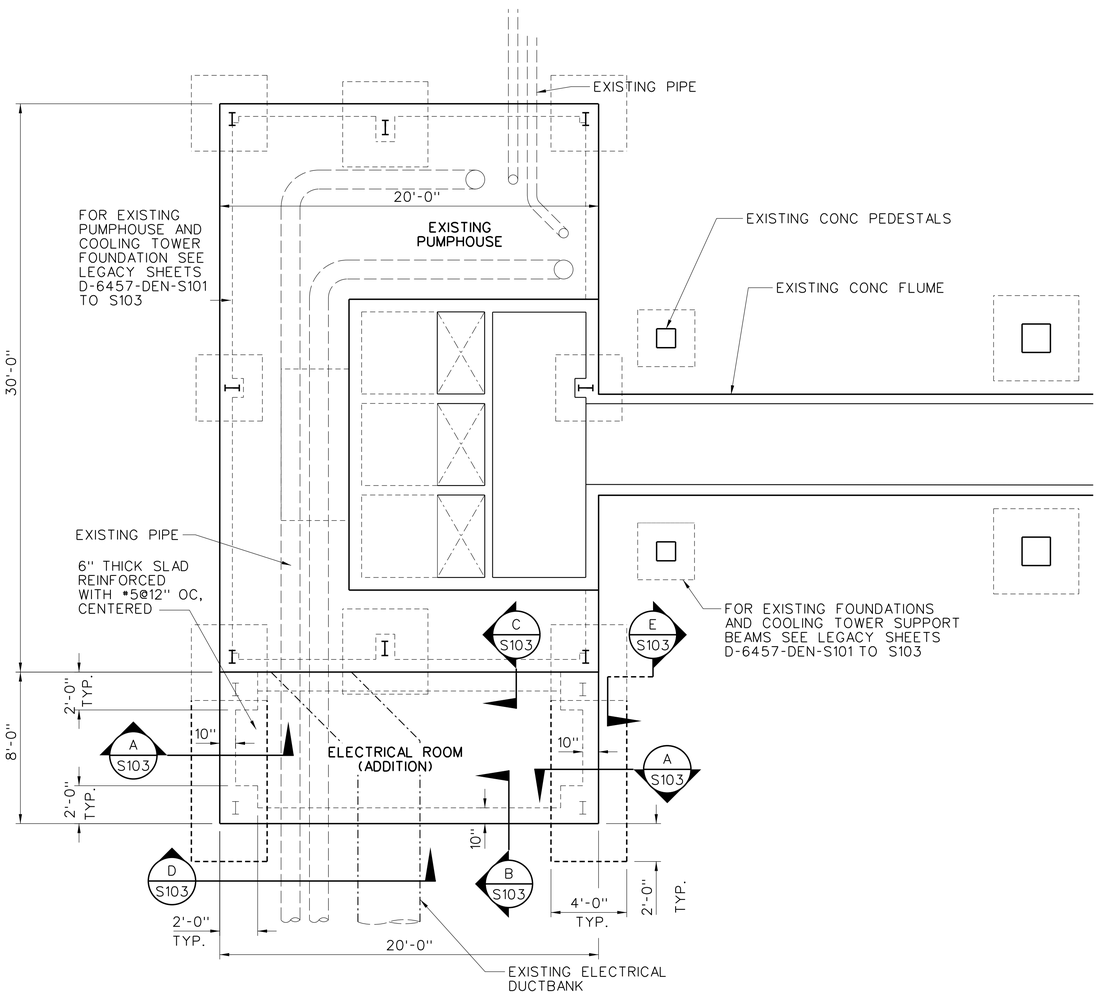

A8 / S102 PUMP HOUSE ADDITIONS FOUNDATION PLANS
SCALE: 1/2" = 1'-0"

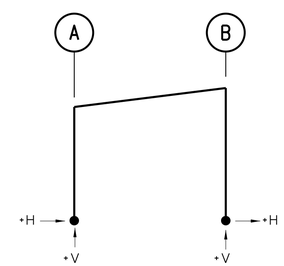

LOAD IDENTIFICATION
1 DL
2 LR
3 WL
4 1.2D+0.5LR
5 1.2D+0.5LR+1.0W

SCALE: 1/2" = 1'-0"

SPLICE LENGTH TABLE (4000PSI)

BAR SIZE	t < 12", Ld (INCHES)	t > 12", Ld (INCHES)	t < 12", CLASS A SPLICE, LENGTH = 1.0Ld (INCHES)	t < 12", CLASS B SPLICE, LENGTH = 1.3Ld (INCHES)	t > 12", CLASS A SPLICE, LENGTH = 1.0Ld (INCHES)	t > 12", CLASS B SPLICE, LENGTH = 1.3Ld (INCHES)
3	15	18	15	19	18	24
4	19	25	19	25	25	32
5	24	31	24	31	31	40
6	29	37	29	37	37	48
7	42	54	42	54	54	70
8	48	62	48	62	62	80
9	54	70	54	70	70	90
10	60	77	60	77	77	100
11	66	85	66	85	85	111

1. t = THICKNESS OF FRESH CONCRETE BELOW THE BOTTOM SURFACE OF A BAR
2. Ld = DEVELOPMENT LENGTH OF BAR
3. CLASS A SPLICE DOES NOT APPLY TO THIS PROJECT.

LOAD COMBINATION MAXIMUM REACTION TABLE (LBS)

FRAME LINE	COL LINE GRIDLINE	LOAD ID	H	V	COL LINE GRIDLINE	LOAD ID	H	V
1, 3	A	1	0	-693	B	1	0	-693
2	A	1	0	-1386	B	1	0	-1386
1, 3	A	2	0	-770	B	2	0	-770
2	A	2	0	-1540	B	2	0	-1540
1, 3	A	3	525	2136	B	3	525	35
2	A	3	1050	4274	B	3	1050	69
1, 3	A	4	0	-1216	B	4	0	-1217
2	A	4	0	-2433	B	4	0	-2433
1, 3	A	5	525	919	B	5	525	-1181
2	A	5	1050	1840	B	5	1050	-2364

GENERAL NOTES:

1. ELEVATIONS ARE IN FEET.
2. DIMENSIONS AND/OR ELEVATIONS MARKED NTS ARE NOT DRAWN TO SCALE.
3. DRAWINGS ARE GENERALLY TO SCALE BUT SHALL NOT BE SCALED. N.T.S. IS SHOWN WHERE DRAWING IS DELIBERATELY OUT OF SCALE.
4. SIZE AND LOCATIONS OF FLOOR PENETRATIONS SHOWN ON THE DRAWINGS ARE APPROXIMATE AND SHALL BE VERIFIED PRIOR TO FABRICATION AND CONSTRUCTION.
5. FOR PRE-ENGINEERED BUILDING ADDITIONS, PROVIDE MOMENT FRAMES IN THE NORTH TO SOUTH DIRECTIONS AND OPTIONAL X-BRACING IN THE EAST TO WEST DIRECTIONS.

CONCRETE NOTES:

1. CAST-IN-PLACE CONCRETE SHALL HAVE A COMPRESSIVE STRENGTH (f'c) OF 4000 PSI AT 28 DAYS, UNLESS NOTED OTHERWISE.
2. REINFORCING STEEL SHALL BE DEFORMED BILLET STEEL ASTM A615 GRADE 60.
3. UNLESS OTHERWISE NOTED, PROVIDE 3/4" CHAMFER AT ALL EXPOSED JOINTS, EDGES, EXTERNAL CORNERS, AND VERTICAL EXPANSION JOINTS.
4. ALL REINFORCEMENT IN CAST-IN-PLACE NON-PRESSTRESSED CONCRETE SHALL HAVE A MINIMUM CLEAR COVER AS FOLLOWS UNLESS NOTED OTHERWISE:
   A) CONCRETE CAST AGAINST & PERMANENTLY EXPOSED TO EARTH .....3 IN
   B) CONCRETE EXPOSED TO EARTH, LIQUID, WEATHER, OR CAST AGAINST A CONCRETE WORK MAT:
   SLABS, BEAMS, PILE CAPS .....2 IN
5. ALL BENDS OF REINFORCEMENT AND ALL BAR SPACERS AND SUPPORTS SHALL BE IN ACCORDANCE WITH SP-66, AMERICAN CONCRETE INSTITUTE DETAILING MANUAL (LATEST EDITION).
6. REINFORCING BAR DESIGNATION NUMBERS CONFORM TO THE NUMBERING SYSTEM OF THE CONCRETE REINFORCING STEEL INSTITUTE.
7. REINFORCING BARS SHALL BE CONTINUOUS AT ALL CORNERS UNLESS NOTED OTHERWISE.
8. REINFORCEMENT, WHERE NECESSARY TO AVOID OPENINGS, PIPES, EMBEDDED ITEMS AND OTHER OBSTRUCTIONS, SHALL BE BENT OR SHIFTED AS DIRECTED BY THE CONTRACTING OFFICER.
9. THE EMBEDMENT AND SPLICE TABLE SHALL BE USED IN DETERMINING LAP SPLICES AND EMBEDMENT LENGTHS WHERE LENGTHS ARE NOT OTHERWISE INDICATED. SPLICE LENGTHS SHALL BE BASED ON THE SMALLER BAR BEING LAPPED. THE CONTRACTOR WILL BE ALLOWED TO MAKE SPLICES IN ADDITION TO THOSE INDICATED IN THE DRAWINGS, WHERE ESSENTIAL TO CONSTRUCTIBILITY, SUBJECT TO APPROVAL BY THE CONTRACTING OFFICER.

DESIGN CRITERIA:

1. APPLICABLE CODES:
   A) 2015 INTERNATIONAL BUILDING CODE
   B) ASCE 7-10 MINIMUM DESIGN LOADS FOR BUILDINGS AND OTHER STRUCTURES
2. DEAD LOAD: SELFWEIGHT OF APPLICABLE MATERIALS
3. LIVE LOAD: ELECTRICAL ADDITION - 100 PSF FLOOR
   STAIR AND ACCESS PLATFORM - 100 PSF
4. SEISMIC: SEE SHEET G-002 FOR ADDITIONAL INFORMATION
   SEISMIC BASE SHEAR, Vs: 0.3 KIPS FOR ELECTRICAL ROOM ADDITION
   SEISMIC RESPONSE COEFFICIENT, CS: 0.09
   RESPONSE MODIFICATION FACTOR, R: 3.5
   (STEEL ORDINARY MOMENT FRAME)
   ANALYSIS PROCEDURE: STATIC LATERAL FORCE PROCEDURE
5. SOIL DESIGN PARAMETERS:
   A) FOUNDATION HAS BEEN DESIGNED FOR A PRESUMED NET ALLOWABLE SOIL BEARING PRESSURE OF 1500 PSF PER IBC 2015 TABLE 1806.2 FOR SANDY CLAY.

REV	APPROVED DATE	DESCRIPTION	JCN	REDLINE DATE	APVD

DEPARTMENT OF TRANSPORTATION
FEDERAL AVIATION ADMINISTRATION
ATO - TECHNICAL OPERATIONS WESTERN SERVICE AREA

ARTCC
MAJOR MECHANICAL MODERNIZATION
PUMP HOUSE ADDITION
FOUNDATION PLAN

DENVER LONGMONT CO

REVIEWED BY
SUBMITTED BY: PAUL TULENKO — PROJECT ENGINEER
APPROVED BY: CALLEN R. COLLINS — MGR: ENGINEERING - SEATTLE
DO NOT SIGN
DESIGNED RS
DRAWN JA
CHECKED
ISSUED BY: ENGINEERING SERVICES ENROUTE/FSS
DATE
JCN 1401893
DRAWING NO ZDV-1401893-S102
REV

ISSUED FOR:

DRAWING PRODUCED ON WSA MICROSTATION SYSTEM

zdv-1401893-s102.dgn 6/28/2018 10:41:17 AM John (CTR) Allen

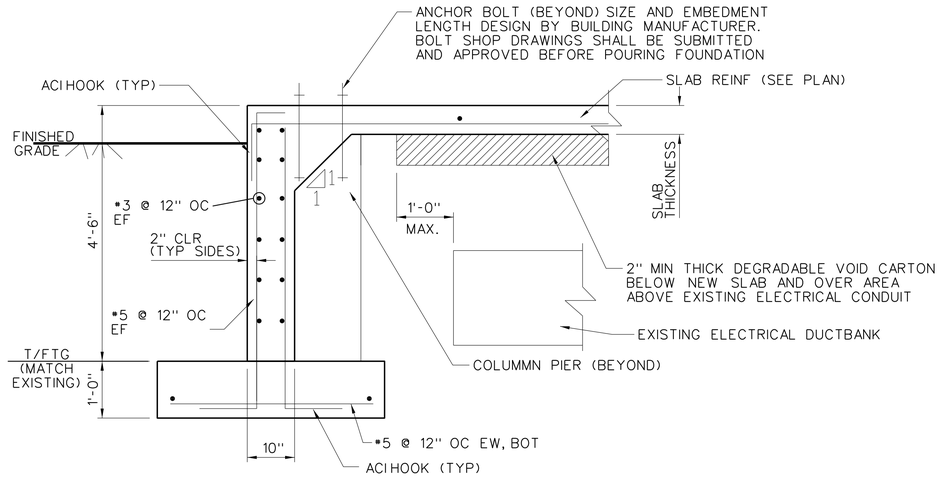

A S103 SECTION @ DUCTBANK
SCALE: 3/4" = 1'-0"

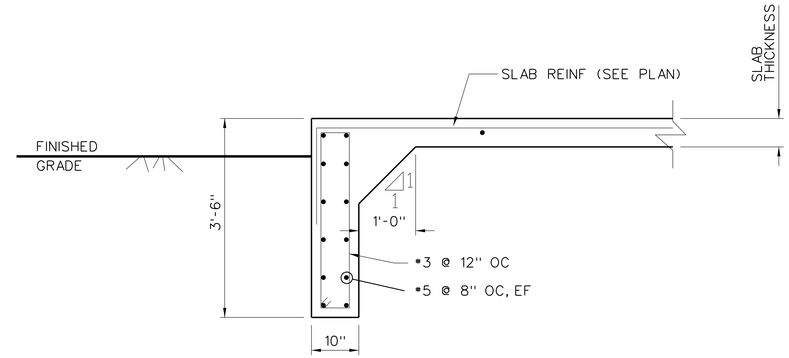

B S103 SECTION @ PERIMETER
SCALE: 3/4" = 1'-0"

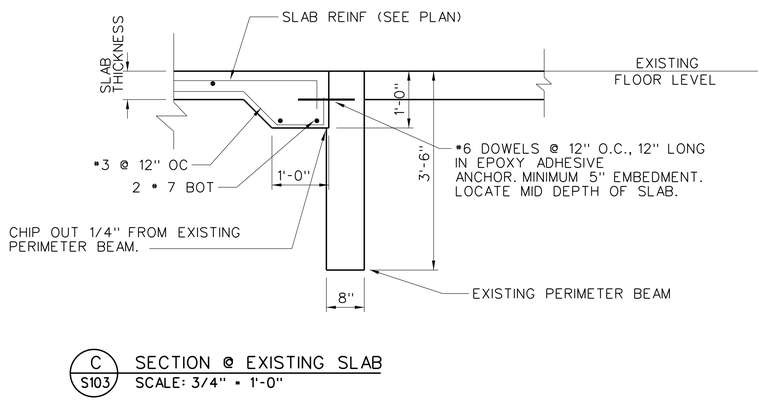

C S103 SECTION @ EXISTING SLAB
SCALE: 3/4" = 1'-0"

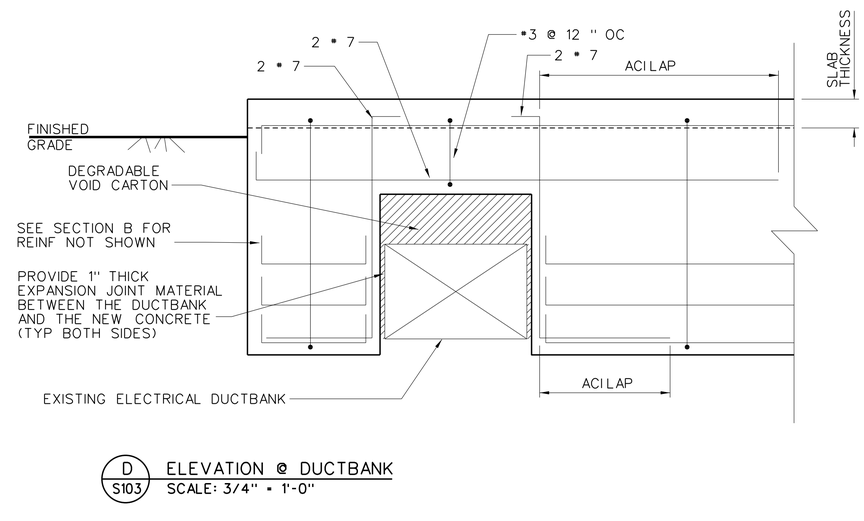

D S103 ELEVATION @ DUCTBANK
SCALE: 3/4" = 1'-0"

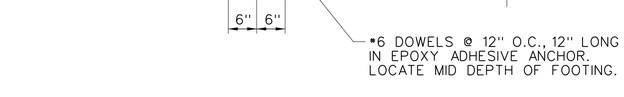

E S103 SECTION FOOTING JOINT
SCALE: 3/4" = 1'-0"

1' 0 1' 2' 3'
SCALE: 3/4" = 1'-0"

REV	APPROVED DATE	DESCRIPTION	JCN	REDLINE DATE	APVD

DEPARTMENT OF TRANSPORTATION
FEDERAL AVIATION ADMINISTRATION
ATO - TECHNICAL OPERATIONS WESTERN SERVICE AREA

ARTCC
MAJOR MECHANICAL MODERNIZATION
PUMP HOUSE ADDITION
FOUNDATION SECTIONS AND DETAILS

DENVER LONGMONT CO

REVIEWED BY
SUBMITTED BY: PAUL TULENKO
PROJECT ENGINEER
APPROVED BY: CALLEN R. COLLINS
MGR: ENGINEERING - SEATTLE
DO NOT SIGN

DESIGNED RS
DRAWN JA
CHECKED
ISSUED BY ENGINEERING SERVICES ENROUTE/FSS
DATE
JCN 1401893
DRAWING NO ZDV-1401893-S103
REV

ISSUED FOR:

zdv-1401893-s103.dgn 6/27/2018 8:58:45 AM John CTR Allen
EDM: zdv-1401893-s103.dgn
DRAWING PRODUCED ON WSA MICROSTATION SYSTEM

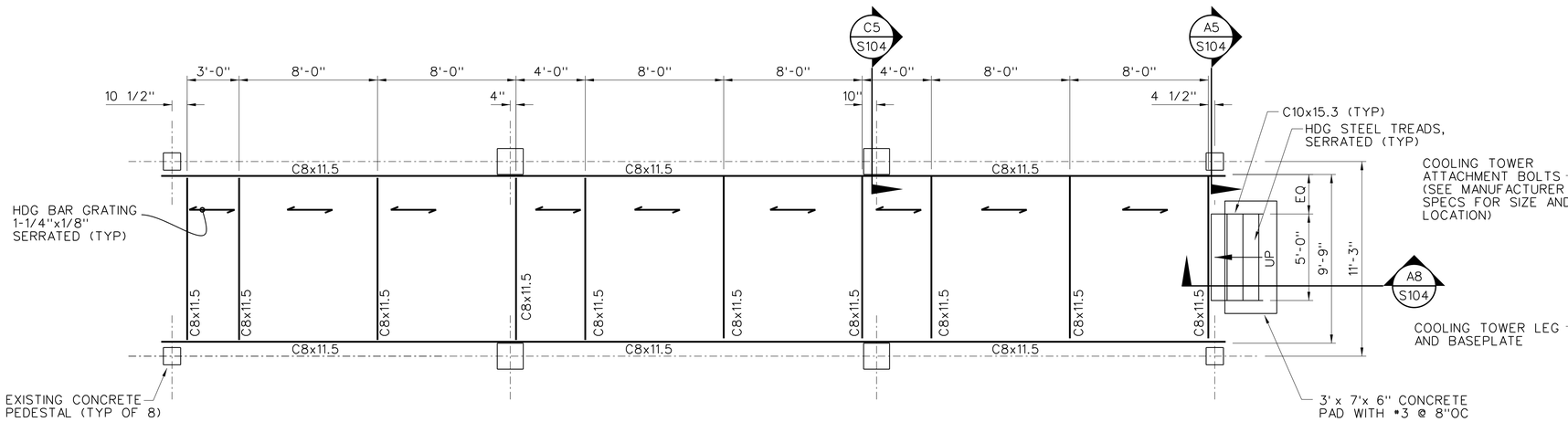

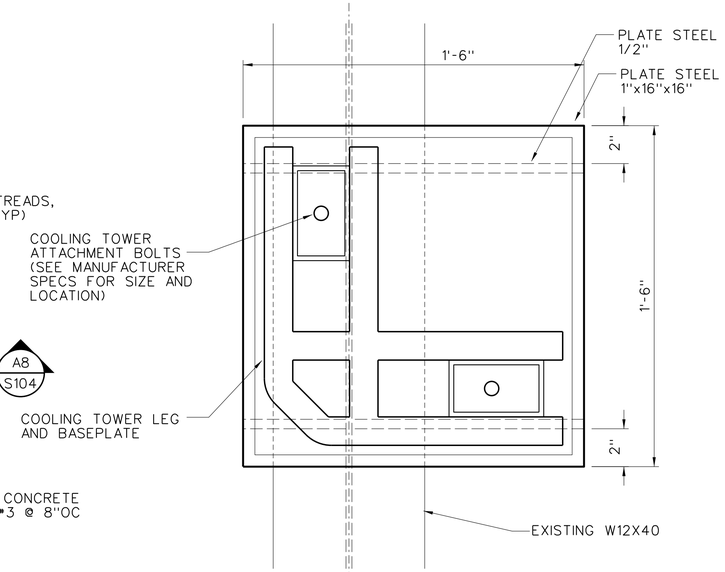

PLAN

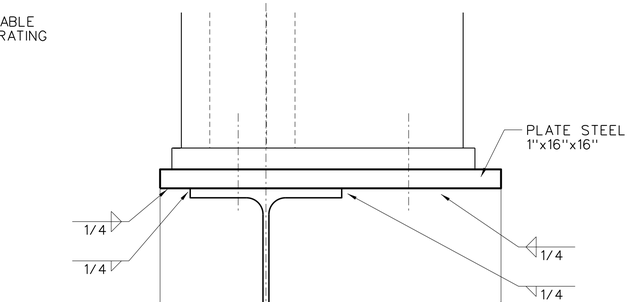

END VIEW

C2 S104 COOLING TOWER BASE PLATE DETAILS
SCALE: 3" = 1'-0" (TYPICAL @ EACH SUPPORT LEG)

E8 S104 COOLING TOWER PLATFORM STEEL LAYOUT
SCALE: 1/4" = 1'-0"

4' 0 4' 8'
SCALE: 1/4" = 1'-0"

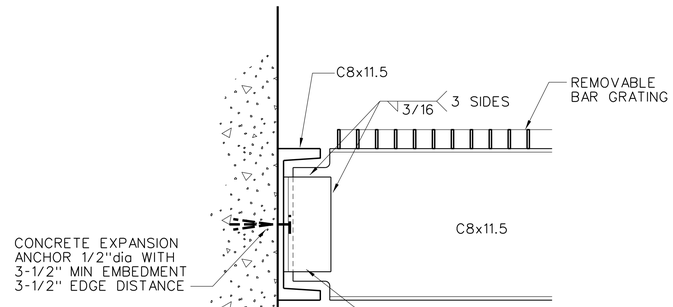

C5 S104 PLATFORM BEAM TO CENTER PIER CONNECTION
SCALE: 3" = 1'-0"

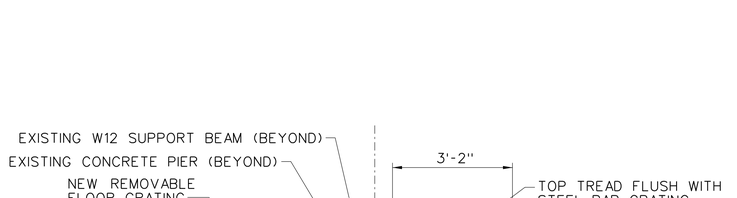

A8 S104 STAIR DETAIL
SCALE: 3" = 1'-0"

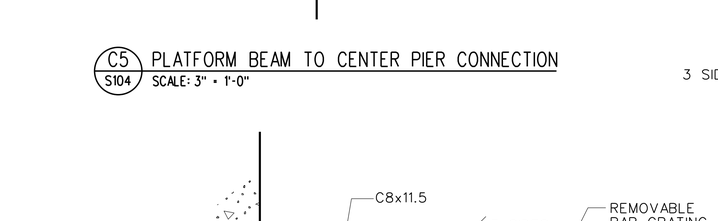

A5 S104 PLATFORM BEAM TO END PIER CONNECTION
SCALE: 3" = 1'-0"

REV	APPROVED DATE	DESCRIPTION	JCN	REDLINE DATE	APVD

DEPARTMENT OF TRANSPORTATION
FEDERAL AVIATION ADMINISTRATION
ATO - TECHNICAL OPERATIONS WESTERN SERVICE AREA
ARTCC

MAJOR MECHANICAL MODERNIZATION
COOLING TOWER AND PUMP HOUSE
PLATFORM PLAN AND DETAILS

DENVER LONGMONT CO

REVIEWED BY
SUBMITTED BY: PAUL TULENKO
PROJECT ENGINEER
APPROVED BY: CALLEN R. COLLINS
MGR: ENGINEERING - SEATTLE

DO NOT SIGN

DESIGNED RS
DRAWN JA
CHECKED
ISSUED BY ENGINEERING SERVICES ENROUTE/FSS
DATE
JCN 1401893
DRAWING NO ZDV-1401893-S104
REV

ISSUED FOR:

zdv-1401893-s104.dgn 6/29/2018 10:47:22 AM John CTR Allen

EDM: zdv-1401893-s104.dgn

DRAWING PRODUCED ON WSA MICROSTATION SYSTEM

HVAC LEGEND

EQUIPMENT

- AHU 200 — SYMBOL / EQUIPMENT DESIGNATION / NUMBER

SINGLE LINE DUCTWORK

- FILTER
- COOLING COIL
- HEATING COIL
- LOUVER
- MOTORIZED PARALLEL BLADE DAMPER
- BACKDRAFT DAMPER
- MOTORIZED OPPOSED BLADE DAMPER
- ELECTRIC HEATING COIL
- FIRE/SMOKE DAMPER
- AFMS / SPMS — AIR FLOW MEASURING STATION/STATIC PRESSURE MEASURING STATION
- HUMID — HUMIDIFIER
- UNIT HEATER
- FAN
- FAN WITH VARIABLE FREQ. MOTOR CONTROLLER
- RECTANGULAR TO ROUND TRANSITION
- SQUARE REDUCER/ INCREASER

DOUBLE LINE DUCTWORK

- 20X10 — RECTANGULAR DUCT (FIRST FIGURE IS SIDE SHOWN)
- 20"ø — ROUND DUCT (DIAMETER)
- LINED DUCT
- FLEXIBLE DUCT
- FLEXIBLE CONNECTION
- VD — VOLUME DAMPER, CONTROL DAMPER
- FD, SD — FIRE DAMPER, SMOKE DAMPER
- FD/SD — COMBINATION FIRE/SMOKE DAMPER
- TURNING VANES
- HIDDEN DUCTWORK
- SUPPLY DUCT (UP OR OUT)
- SUPPLY DUCT (DOWN)
- RETURN OR EXHAUST DUCT (UP OR OUT)
- RETURN OR EXHAUST DUCT (DOWN)
- OUTSIDE AIR UP
- OUTSIDE AIR DOWN
- CD-1 / 200 / 12X12 — DIFFUSER, GRILLE, & REGISTER DESIGNATION; AIR FLOW RATE (CFM); NECK SIZE (REGISTERS & GRILLES ONLY)
- CR-1 — CEILING RETURN, UNLESS OTHERWISE NOTED
- EG-1 / 200 / 12X12 — EXHAUST GRILLE
- SIZE / CFM — OUTSIDE AIR INTAKE
- DOOR LOUVER
- U — UNDERCUT DOOR
- R — DUCT RISE
- D — DUCT DROP
- TRANSITION-RECTANGULAR TO ROUND
- BDD — BACKDRAFT DAMPER
- SPD — STATIC PRESSURE DAMPER
- T — THERMOSTAT
- TO BE DEMOLISHED

PIPING

SIZE (IN)		
CD	CD	CONDENSATE DRAIN
CR	CR	STEAM CONDENSATE RETURN
CWS	CWS	CHILLED WATER SUPPLY
CWR	CWR	CHILLED WATER RETURN
CTS	CTS	COOLING TOWER WATER SUPPLY
CTR	CTR	COOLING TOWER WATER RETURN
FOR	FOR	FUEL OIL RETURN
FOS	FOS	FUEL OIL SUPPLY
RL	RL	REFRIGERANT LIQUID
RG	RG	REFRIGERANT GAS
STM	STM	STEAM PIPING

PIPING (CONT.)

SYMBOL	ABBREVIATION	DESCRIPTION
		DIRECTION OF PITCH
		ANCHOR
		FLUID FLOW DIRECTION
		PIPE TURNING UP
		PIPE TURNING DOWN
		CONCENTRIC REDUCER
		ECCENTRIC REDUCER
		CAPPED PIPE/OUTLET
		PLUGGED PIPE/OUTLET
	HTP	HOT TAP/STOPPLE FITTING
	BV	BALL VALVE
	GV	GATE VALVE
	AV	ANGLE VALVE
	GLV	GLOBE VALVE
	CV	CHECK VALVE
	BFV	BUTTERFLY VALVE
	P/TRV	PRESSURE/TEMPERATURE RELIEF/SAFETY VALVE
	GC	GAS COCK
	PV	PLUG VALVE
		ALIGNMENT GUIDE
		EXPANSION JOINT
		FLEXIBLE HOSE (FLANGED ENDS)
		FLEXIBLE HOSE (SCREWED ENDS)
		FLEXIBLE PIPE CONNECTOR
		AIR ELIMINATOR
		TEST COCK
		VALVE AND BLIND FLANGE
		PIPE HEADER WITH BLIND FLANGE
	AV	MANUAL AIR VENT
	AAV	AUTOMATIC AIR VENT
		FLOW CONTROL VALVE
		WATER METER
		FLOW METER
		STRAP-ON SENSOR
		WELD CAP
S		SOLENOID VALVE
M		MOTOR OPERATED 2-WAY CONTROL VALVE
M		MOTOR OPERATED 3-WAY CONTROL VALVE
		STRAINER WITH BLOWDOWN VALVE
		BALANCING VALVE
		PRESSURE REGULATING VALVE
		PRESSURE RELIEF OR SAFETY VALVE
	TI	THERMOMETER
		PUMP
	CP	INLINE PUMP
	U	UNION
	PI	PRESSURE GAUGE
		POINT OF CONNECTION OF NEW TO EXISTING
		POINT OF TERMINATION
		NEW WORK- DARK LINE WEIGHT
		EXISTING - LIGHT LINE WEIGHT

ABBREVIATIONS

A	AMPERES	H, (H)	HEIGHT
AAV	AUTOMATIC AIR VENT	HC	HEATING COIL
AC	AIR CONDITIONING	HD	HEAD
ACM	ASBESTOS CONTAINING MATERIAL	HORZ	HORIZONTAL
ACU	AIR CONDITIONING UNIT	HP	HORSEPOWER, HEAT PUMP
AD	ACCESS DOOR	HR	HOUR
AF	AFTER FILTER, AIR FOIL	HS	HAND SWITCH
AFF	ABOVE FINISHED FLOOR	HTP	HOT TAP/ STOPPLE FITTING
AHU	AIR HANDLING UNIT	HU	HUMIDIFIER
APD	AIR PRESSURE DROP	HWC	HOT WATER COIL
AP	ACCESS PANEL	HWP	HOT WATER PUMP
AS	AIR SEPARATOR	HWR	HOT WATER RETURN
AV	MANUAL AIR VENT	HWS	HOT WATER SUPPLY
B	BOILER	HV	HEATING AND VENTILATION
BDD	BACK DRAFT DAMPER	HZ	FREQUENCY
BFP	BACK FLOW PREVENTER	IPS	IRON PIPE SIZE
BHP	BRAKE HORSEPOWER	IN	INCH OR INCHES
BOT	BOTTOM	IW	INDUSTRIAL WATER
BT	BOTTOM THROAT, BUFFER TANK	KW	KILOWATT
BTU	BRITISH THERMAL UNIT	L, (L)	LENGTH
BTUH	BTU PER HOUR	LAT	LEAVING AIR TEMPERATURE
C	CONDENSER	LBS	POUNDS, POUNDS DRY STEAM
CAV	CONSTANT AIR VOLUME	LBS/HR	POUNDS PER HOUR
CC	COOLING COIL	LIN FT, LF	LINEAR FEET
CD	CEILING DIFFUSER, CONTROL DAMPER	LWB	LEAVING WET BULB TEMPERATURE
CFM	CUBIC FEET PER MINUTE	LWT	LEAVING WATER TEMPERATURE
CFR	CODE OF FEDERAL REGULATIONS	MBH	THOUSAND BTU PER HOUR
CLG	CEILING	MCA	MINIMUM CIRCUIT AMPS
COMPR	COMPRESSOR	MOCP	MINIMUM OVERCURRENT PROTECTION
COND	CONDENSATE	MOT, MTR	MOTOR
CONN	CONNECTION	NC	NORMALLY CLOSED, NOISE CRITERIA
CONT	CONTINUATION	NIC	NOT IN CONTRACT
COR	CONTRACING OFFICER'S REPRESNTATIVE	NO	NORMALLY OPEN, NUMBER
		NPSH	NET POSITIVE SUCTION HEAD
CP	CONTROL PANEL	NTS	NOT TO SCALE
CU	CONDENSING UNIT	OA	OUTSIDE AIR
CV	CONSTANT VOLUME, CONTROL VALVE	OAL	OUTSIDE AIR LOUVER
CW	COLD WATER	OED	OPEN END DUCT
D	DROP	OPNG	OPENING
DB	DRY BULB	PD	PRESSURE DROP
DCW	DOMESTIC COLD WATER	PF	PACKAGED FILTER, PREFILTER
DDCS	DIRECT DIGITAL CONTROL SYSTEM	PH	PHASE
DE	DEMOLISH EXISTING	PRV	PRESSURE REDUCING VALVE
DEG	DEGREE	PSI	POUNDS PER SQUARE INCH
DHW	DOMESTIC HOT WATER	PSIG	PSI GAUGE
DIAM, DIA, ø	DIAMETER	PSIA	PSI ABSOLUTE
DMPR	DAMPER	R	RELOCATED, RISE
DN	DOWN	RA	RETURN AIR
DP	DIFFERENTIAL PRESSURE	RAD	RADIATION, RADIANT HEATER
E, (E)	EXISTING	REQ	REQUIRED
EA	EXHAUST AIR	RG	RETURN GRILLE
EAL	EXHAUST AIR LOUVER	RH	RELATIVE HUMIDITY
EAT	ENTERING AIR TEMPERATURE	RPM	REVOLUTIONS PER MINUTE
EER	ENERGY EFFICIENCY RATIO	RR	RETURN REGISTER
EF	EXHAUST FAN	RX	REMOVE EXISTING
EFF	EFFICIENCY	SA	SUPPLY AIR, SOUND ATTENUATOR
EL	ELEVATION	SEN,SENS	SENSIBLE
ELEC	ELECTRIC	SF	SUPPLY FAN
ELEV	ELEVATION	SG	SUPPLY GRILLE
ENT	ENTERING	SD	SMOKE DETECTOR
ER	EXISTING RELOCATED, EXHAUST REGISTER	SP	STATIC PRESSURE
		SR	SUPPLY REGISTER
ESP	EXTERNAL STATIC PRESSURE	T	THROAT
ET	EXPANSION TANK	TA	TRANSFER AIR
ETR	EXISTING TO REMAIN	TDH	TOTAL DYNAMIC HEAD
EWB	ENTERING WET BULB	TSP	TOTAL STATIC PRESSURE
EWT	ENTERING WATER TEMPERATURE	TSTAT	THERMOSTAT
EXH	EXHAUST	TV	TURNING VANES
EXP	EXPANSION	TYP	TYPICAL
F	FILTER	TX	TOILET EXHAUST
°F	DEGREES FAHREINHEIT	UH	UNIT HEATER
FA	FREE AREA (SQ.FT)	UON	UNLESS OTHERWISE NOTED
FC	FLEXIBLE CONNECTION	V	VOLTS
FD	FIRE DAMPER	VAC	VACUUM
FF	FINAL FILTER	VEL	VELOCITY
FIN FL, FF	FINISHED FLOOR	VFD	VARIABLE FREQUENCY DRIVE
FLA	FULL LOAD AMPERES	W, (W)	WIDTH
FLEX	FLEXIBLE	W/	WITH
FLR	FLOOR	W/O	WITHOUT
FPM	FET PER MINUTE	WB	WET BULB
FPR	FLAT PANEL RADIATOR	WMS	WIRE MESH SCREN
FPS	FEET PER SECOND	WP	WORKING PRESSURE
FSD, FD/SD	COMBINATION FIRE AND SMOKE DAMPER	WPD	WATER PRESSURE DROP
FT	FEET		
FTR	FINNED TUBE RADIATION		
FV	FACE VELOCITY		
G, GA	GAUGE		
GAL	GALLON		
GALV'D	GALVANIZED		
GEN	GENERATOR		
GPH	GALLONS PER HOUR		
GPM	GALLONS PER MINUTE		
GX	GENERAL EXHAUST		

GENERAL NOTES

A. HVAC LEGEND IS THE STANDARD LEGEND WHICH IS USED FOR FAA FACILITIES DESIGN. NOT ALL SYMBOLS AND ABBREVIATIONS SHOWN MAY BE USED ON THIS PROJECT.

B. FOR LOCATIONS AND SIZES OF WALL OPENINGS SEE ARCHITECTURAL DRAWINGS.

C. INSTALLATION SHALL PROVIDE READY ACCESS TO VALVES, DAMPERS, COILS AIR FILTERS, AND OTHER DEVICES. ACCESS DOORS SHALL BE INSTALLED TO PROVIDE ADEQUATE CLEARANCES FOR DIRECT ACCESS.

D. ALL HOT TAPS MUST BE PERFORMED AT TIMES OF LOW AIR TRAFFIC. COORDINATE SCHEDULE WITH COR.

E. DESIGNATE A PERSON TO BE RESPONSIBLE FOR FIRE PROTECTION DURING WELDING AND CUTTING OPERATIONS. PERSON PERFORMING FIRE PROTECTION DUTIES SHALL NOT BE SAME INDIVIDUAL THAT IS PERFORMING WELDING OPERATIONS. COMPLY WITH OSHA STANDARDS FOR WELDING IN 29 CFR-1910 AND 29 CFR-1926. PROVIDE TEMPORARY FIRE EXTINGUISHERS DURING CONSTRUCTION. WELDING SHALL BE SCHEDULED IN WRITING WITH COR AND SHALL BE PERFORMED OUTSIDE OF FACILITY OR IN SAFE LOCATION TO BE DETERMINED BY COR.

F. FOR WELDING THAT MUST BE PERFORMED INSIDE THE BUILDING, PROVIDE LOCAL MECHANICAL VENTILATION DURING WELDING DUCTED TO OUTSIDE, APPROVED BY THE FAA AND ACGIH.

G. NO WELDING SHALL BE POWERED FROM FACILITY ELECTRICAL SYSTEM. CONNECT METAL TO BE WELDED TO A GOOD EARTH GROUND. FACILITY STRUCTURAL STEEL SHALL NOT BE USED AS A GROUND. NO ELECTRIC ARC WELDING IS TO BE PERFORMED ON, OR IN THE VIVINITY OF ANY SENSITIVE, AIR TRAFFIC CONTROL, OR ELECTRONIC EQUIPMENT. CONTRACTOR SHALL SUBMIT A FLOOR PLAN, INDICATING AREAS OF ELECTRIC ARC WELDING TO COR FOR APPROVAL 15 CALENDAR DAYS IN ADVANCE OF ANY WORK.

H. EQUIPMENT SHALL BE INSTALLED PER MANUFACTURER'S RECOMMENDATIONS AND INSTRUCTIONS.

I. LOCATIONS, SIZES, CLEARANCES AND CONFIGURATIONS OF EQUIPMENT SHOWN ARE BASED ON SPECIFIC SCHEDULED MANUFACTURERS AND MODEL NUMBERS. SUBSTITUTION OF SUCH EQUIPMENT MANUFACTURERS WILL REQUIRE THE CONTRACTORS PRIOR VERIFICATION OF CONFORMANCE PER THE REQUIREMENTS OF LOCATION, SIZE CLEARANCES AND CONFIGURATION AS COMPARED TO SPACE ALLOCATED TO HOUSE SPECIFIC EQUIPMENT. RESUBMIT PROPOSED EQUIPMENT TO CONTRACTING OFFICER'S TECHNICAL REPRESENTATIVE (COR) FOR APPROVAL, PRIOR TO INSTALLATION.

K. PROVIDE LOCAL VENTILATION OF AREA DURING APPLICATION OF PRODUCTS WHICH MAY CAUSE ACUTE OR CHRONIC HEALTH OR SAFETY EFFECTS TO FACILITY OCCUPANTS IN ACCORDANCE WITH OSHA AND ACGIH REQUIREMENTS. SUBMIT VENTILATION PLAN TO COR FOR APPROVAL.

J. PROVIDE A DETAILED SCHEDULE FOR DEMOLITION OF HVAC EQUIPMENT AND INSTALLATION OF NEW HVAC SYSTEMS. COORDINATE WITH COR PRIOR TO REMOVAL OF EQUIPMENT. SYSTEMS MUST REMAIN IN OPERATION DURING CONSTRUCTION.

L. PRIOR TO THE DEMOLITION OF ITEMS WHICH HAVE UTILITIY CONNECTIONS (WATER, ELECTRICITY, GAS ETC.) ARRANGE WITH COR TO LOCATE SHUT-OFF VALVES, PANEL BOXES AND OTHER CONTROL ELEMENTS. FAA PERSONNEL SHALL SHUT OFF AND ISOLATE EQUIPMENT.

M. WIND LOAD CRITERIA - REFER TO SHEET G002 FOR WIND LOAD CRITERIA.

REV	APPROVED DATE	DESCRIPTION	JCN	REDLINE DATE	APVD

DEPARTMENT OF TRANSPORTATION
FEDERAL AVIATION ADMINISTRATION
ATO - TECHNICAL OPERATIONS — WESTERN SERVICE AREA

ARTCC

MAJOR MECHANICAL MODERNIZATION
MECHANICAL ABBREVIATIONS,
SYMBOLS AND GENERAL NOTES

DENVER — LONGMONT — CO

REVIEWED BY	SUBMITTED BY: PAUL TULENKO (DO NOT SIGN) — PROJECT ENGINEER	APPROVED BY: CALLEN R. COLLINS (DO NOT SIGN) — MGR: ENGINEERING - SEATTLE
DESIGNED TU	ISSUED BY: ENGINEERING SERVICES ENROUTE/FSS	DATE / JCN 1401893
DRAWN JA		DRAWING NO: ZDV-1401893-M001 — REV
CHECKED		

ISSUED FOR:

DRAWING PRODUCED ON WSA MICROSTATION SYSTEM

EDM: zdv-1401893-m001.dgn

rsb-1401893-m001.dgn 6/27/2018 10:09:14 AM John CTR Allen

HVAC LEGEND

INSTRUMENTATION

MEASURED VARIABLE OR CONTROLLED DEVICE

TS 1 — INSTRUMENT OR DEVICE IDENTIFICATION NUMBER

EQUIPMENT INSTRUMENT OR DEVICE NOT LOCATED IN AN ENCLOSURE

MEASURED VARIABLE OR CONTROLLED DEVICE

SS — INSTRUMENT OR DEVICE LOCATED IN AN ENCLOSURE

AFMS	AIR FLOW MEASURING STATION
AFS	AIR FLOW SWITCH
AX	AUXILIARY CONTACT
C	COMMON
CD	CONTROL DAMPER
CI	CURRENT INPUT
CR	CONTROL RELAY
CV	CONTROL VALVE
DDCP	DIRECT DIGITAL CONTROL PANEL
DI	DAMPER POSITION INDICATOR
DP	DIFF. PRESSURE SWITCH
FACP	FIRE ALARM CONTROL PANEL
FEPC	FRONT END PERSONAL COMPUTER
FR	FIELD MOUNTED RELAY
FZ	FREEZESTAT
H	HUMIDISTAT
HS	HUMIDITY SENSOR
M	MOTOR/ACTUATOR
N.C.	NORMALLY CLOSED
N.O.	NORMALLY OPEN
PD	PRESSURE DIFFERENTIAL SENSOR
PDI	PRESSURE DIFFERENTIAL INDICATOR
PI	PRESSURE INDICATOR
S	SMOKE DETECTOR
SS	START/STOP
T	THERMOSTAT
TI	TEMPERATURE INDICATOR
TS	TEMPERATURE SENSOR

·····	ELECTRONIC INTERLOCK WIRING
·— —	DDC CONTROL SYSTEM WIRING
ACD	ADDRESSABLE CONTROL MODULE
X	DDCP DATA INPUT/OUTPUT TO CENTRAL FEPC
DI	DIGITAL INPUT TO DDCP
DO	DIGITAL OUTPUT FROM DDCP
AI	ANALOG INPUT TO DDCP
AO	ANALOG OUTPUT FROM DDCP

DEMOLITION

1. REMOVAL OF EQUIPMENT SHALL INCLUDE REMOVAL OF ASSOCIATED PIPING, SUPPORT, INSULATION, MOTORS, ELECTRICAL CONNECTIONS, AUTOMATIC CONTROL WIRING AND ITS COMPONENTS (UON).
2. PHYSICAL SIZES AND LOCATION OF EQUIPMENT AND ASSOCIATED PIPING ARE APPROXIMATE. THE CONTRACTOR SHALL VERIFY SIZES AND DIMENSIONS AFFECTING THE WORK.
3. ALL ASSOCIATED CONTROLS, UNLESS NOTED OTHERWISE, SHALL BE REPLACED WITH SCHNEIDER ELECTRIC STRUXUREWARE CONTROLS TO ACCOMMODATE NEW CHILLER AND PUMP INSTALLATION.
4. DEMOLITION DRAWINGS INDICATE PIPING AND EQUIPMENT WITHIN THE WORK AREA. REMOVE AND REINSTALL (AS REQUIRED) PIPING, ELECTRICAL WIRING AND CONDUITS NOT INDICATED AND NOT RELATED TO THE NEW CHILLER/PUMP AND EXHAUST DUCTWORK INSTALLATION WHERE THEY INTERFERE WITH THE NEW WORK. OBTAIN PRIOR APPROVAL FROM COR FOR SUCH WORK.
5. SHUTDOWN AND REMOVAL OF THE EXISTING EQUIPMENT AND PIPING SHALL BE ACCOMPLISHED BY CLOSING SHUT-OFF VALVES AND DE-ENERGIZING ELECTRICAL SUPPLY. THIS WORK SHALL BE SCHEDULED AND COORDINATED WITH THE COR BEFORE START OF WORK. ALL MECHANICAL AND ELECTRICAL SHUTDOWN WORK SHALL BE ACCOMPLISHED BY FAA PERSONNEL.
6. WHERE WORK IS DESIGNATED TO BE "TEMPORARY", IT WILL EVENTUALLY BE REMOVED IN A SUBSEQUENT STEP. SOME TEMPORARY WORK MAY NOT BE SHOWN ON DWGS (e.g. SOME BLIND FLANGES).
7. PROTECT FLOOR DRAINS FROM DAMAGE AND DEBRIS AT ALL TIMES.

NEW WORK

1. ALL WORK INDICATED WITH HEAVY LINE WEIGHT SHALL BE NEW AND PROVIDED UNDER THIS CONTRACT.
2. VERIFY LOCATIONS AND DIMENSIONS OF ALL EXISTING EQUIPMENT AND COORDINATE ALL WORK PRIOR TO THE START OF CONSTRUCTION.
3. DRAWINGS DO NOT SHOW ALL REQUIRED FITTINGS, ELBOWS, AND/OR OFFSETS. FINAL INSTALLATION WITH ALL FITTINGS, ELBOWS, AND OFFSETS SHALL BE THE RESPONSIBILITY OF THE CONTRACTOR, AT NO ADDITIONAL COST TO THE FAA.
4. CONTRACTOR SHALL VERIFY AND COORDINATE VOLTAGE AND PHASE OF EACH PIECE OF EQUIPMENT PRIOR TO ORDERING AND SHALL SUBMIT THIS INFORMATION WITH SHOP DRAWINGS.
5. CONTRACTOR SHALL COORDINATE THE INSTALLATION OF MECHANICAL WORK WITH THE WORK OF ALL OTHER TRADES.
6. ALL EQUIPMENT SHALL BE INSTALLED IN ACCORDANCE WITH APPLICABLE CODES, THE PRINTED INSTALLATION INSTRUCTIONS OF THE MANUFACTURER, THE SPECIFICATIONS, AND APPROVED SHOP DRAWINGS.
7. COOLING TOWER WATER MAINS SHALL NOT INTERFERE WITH OTHER PIPING OR BE OVER CHILLER COMPRESSOR, MOTOR OR STARTER. PIPING SHALL BE INSTALLED SUCH THAT IT WILL NOT INTERFERE WITH SERVICEABILITY OF ANY EQUIPMENT.
8. PROTECT FLOOR DRAINS FROM DAMAGE AND DEBRIS AT ALL TIMES.

CONSTRUCTION SEQUENCE

THE ARTCC IS A 24 HOUR FACILITY AND CAN NOT TOLERATE THE LOSS OF POWER OR CHILLED WATER. A CONSTRUCTION SEQUENCE SHALL BE PROVIDED BY THE CONTRACTOR WHICH MINIMIZES THE RISK OF A SHUTDOWN TO ANY MECHANICAL OR ELECTRICAL SYSTEMS. HEATING HOT WATER SYSTEM MAY HAVE SERVICE INTERRUPTED AS APPROVED AND SCHEDULED WITH COR.

GENERAL:

A. DO NOT COMMENCE CHILLED WATER PLANT WORK WITHOUT AN APPROVED DETAILED SEQUENCE OF CONSTRUCTION INCLUDING ISOLATION VALVES, FLOW CONTROL VALVES, AND FLOW METERS.

B. DO NOT COMMENCE OPERATION OF AIR-COOLED CILLERS WITHOUT BEING TESTED AND WITHOUT AN OPERATIONAL READINESS DEMONSTRATION (ORD). ORD MUST RUN FIVE CONSECUTIVE DAYS (120 HOURS) WITHOUT FAILURE. UPON FAILURE, INCLUDING SHUTDOWNS FROM FALSE ALARM, COMMENCE REPAIRS AND REPEAT ORD.

C. BEFORE PROCEEDING TO THE NEXT STEP ALL EQUIPMENT, APPURTENANCES, AND ACCESSORIES FOR THAT STEP MUST BE APPROVED AND ON SITE.

D. IF CHILLER DISASSEMBLY IS REQUIRED IT MUST BE REASSEMBLED BY FACTORY AUTHORIZED PERSONNEL.

E. INSTALL AND ACTIVATE NEW REFRIGERANT LEAK DETECTION SYSTEM BEFORE PROCEEDING TO STEP 1.

F. COOLING TOWER REPLACEMENT IS NOT ALLOWED DURING THE MONTHS OF NOVEMBER THROUGH FEBRUARY TO MITIGATE LOW AMBIENT TEMPERATURE EFFECT ON TEMPORARY AIR-COOLED CHILLERS.

STEP 1 - TEST CHILLER AND CHILLED WATER PUMP ISOLATION VALVES AND SUBMIT CONTINGENCY PLANS.

STEP 2 - REMOVE AND REPLACE CH-200, P-1A AND P-1B.

STEP 3 - REMOVE AND REPLACE CH-100, P-1C AND P-1D.

STEP 4 - RUN TEMPORARY PIPING FOR TCH-1 AND TCH-2.

STEP 5 - CONNECT TCH-1 TO E-BUS SECTION xxxxxxxx

STEP 6 - CONNECT TCH-2 TO E-BUS SECTION xxxxxxxx

STEP 7 - SETUP TCH-1 AND TCH-2.

STEP 8 - REPLACE CHILLER AND CHILLED WATER PUMP ISOLATION VALVES AND TK-1.

STEP 9 - REMOVE AND REPLACE CT-1A, 1B, 1C, AND PUMPS P-3A, 3B, 3C AND RESPECTIVE ISOLATION VALVES.

STEP 10 - RELEASE TCH-1 AND TCH-2.

REV	APPROVED DATE	DESCRIPTION	JCN	REDLINE DATE	APVD

DEPARTMENT OF TRANSPORTATION
FEDERAL AVIATION ADMINISTRATION
ATO - TECHNICAL OPERATIONS — WESTERN SERVICE AREA

ARTCC

MAJOR MECHANICAL MODERNIZATION
MECHANICAL ABBREVIATIONS,
SYMBOLS AND CONSTRUCTION SEQUENCE

DENVER — LONGMONT — CO

REVIEWED BY

SUBMITTED BY: PAUL TULENKO — PROJECT ENGINEER

APPROVED BY: CALLEN R. COLLINS — MGR: ENGINEERING - SEATTLE

DO NOT SIGN

DESIGNED: TU
DRAWN: JA
CHECKED:

ISSUED BY: ENGINEERING SERVICES ENROUTE/FSS

DATE:
JCN: 1401893
DRAWING NO: ZDV-1401893-M002
REV:

ISSUED FOR:

DRAWING PRODUCED ON WSA MICROSTATION SYSTEM

rd-1401893-m002.dgn 6/27/2018 10:09:34 AM John CTR Allen

EDM: zdv-1401893-m002.dgn

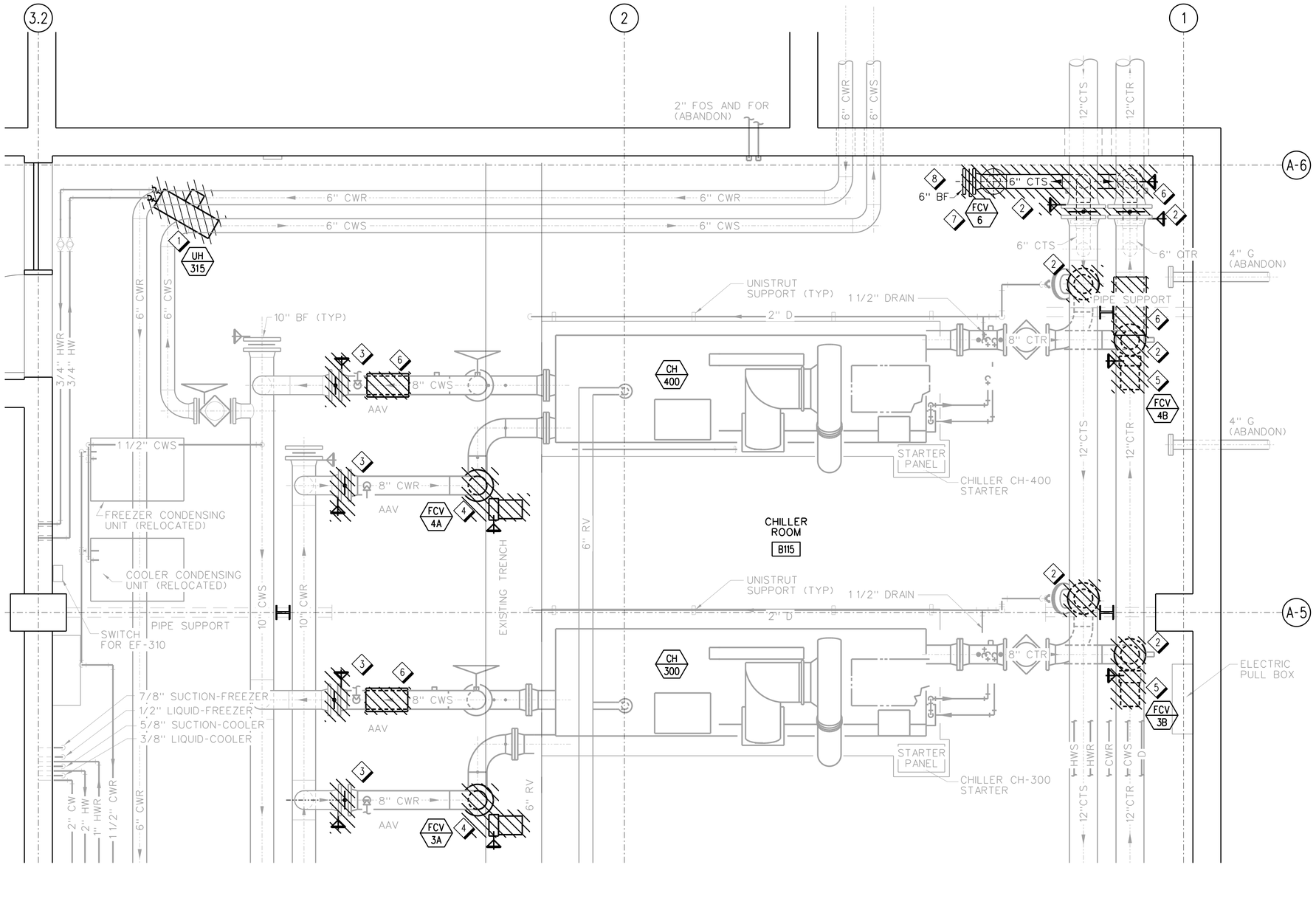

A8 / M101 BASEMENT CHILLER ROOM B115 HVAC EQUIPMENT AND PIPING PLAN - DEMOLITION

SCALE: 1/2" = 1'-0"

1' 0 1' 2' 5'

SCALE: 1/2" = 1'-0"

GENERAL NOTES:

A. REFER TO SHEET M001 FOR GENERAL MECHANICAL NOTES.

B. ONLY ONE PUMP AND ONE CHILLER MAY BE REMOVED FROM SERVICE AT ANY TIME.

C. DEMOLITION OF PIPING SECTIONS, CONTROL VALVES AND ISOLATION VALVES SHALL BE PERFORMED IN THE SAME ORDER AS THE EQUIPMENT THEY ARE ASSOCIATED WITH ARE REMOVED.

SHEET NOTES:

1. DEMOLISH HOT WATER UNIT HEATER.
2. DEMOLISH ISOLATION VALVES ON CONDENSER SIDE WHERE INDICATED.
3. DEMOLISH ISOLATION VALVES ON CHILLED WATER SIDE WHERE INDICATED.
4. DEMOLISH CHIILLED WATER CONTROL VALVES, FCV-3A AND FCV-4A.
5. DEMOLISH CONDENSER WATER CONTROL VALVES, FCV-3B AND FCV-4B.
6. DEMOLISH FLOW METERS WHERE INDICATED.
7. DEMOLISH CONDENSER WATER BYPASS CONTROL VALVE FCV-6.
8. DEMOLISH CONDENSER WATER BYPASS PIPING BACK TO INITIAL ISOLATION VALVE OFF OF 12" CTS/CTR PIPING. INSTALL A SPOOL PIECE FROM THE ISOLATION VALVES FOR FUTURE APPLICATIONS.

KEY PLAN:

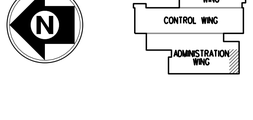

REV	APPROVED DATE	DESCRIPTION	JCN	REDLINE DATE	APVD

DEPARTMENT OF TRANSPORTATION
FEDERAL AVIATION ADMINISTRATION
ATO - TECHNICAL OPERATIONS WESTERN SERVICE AREA

ARTCC

MAJOR MECHANICAL MODERNIZATION
BASEMENT CHILLER ROOM B115
HVAC EQUIPMENT & PIPING PLAN - DEMOLITION

DENVER LONGMONT CO

REVIEWED BY	SUBMITTED BY: PAUL TULENKO (DO NOT SIGN)	APPROVED BY: CALLEN R. COLLINS (DO NOT SIGN)	
	PROJECT ENGINEER	MGR: ENGINEERING - SEATTLE	
DESIGNED TU	ISSUED BY: ENGINEERING SERVICES ENROUTE/FSS	DATE	JCN 1401893
DRAWN JA		DRAWING NO ZDV-1401893-M101	REV
CHECKED			

ISSUED FOR:

DRAWING PRODUCED ON WSA MICROSTATION SYSTEM

EDM: zdv-1401893-m101.dgn

zdv-1401893-m101.dgn 6/27/2018 10:10:53 AM John CTR Allen

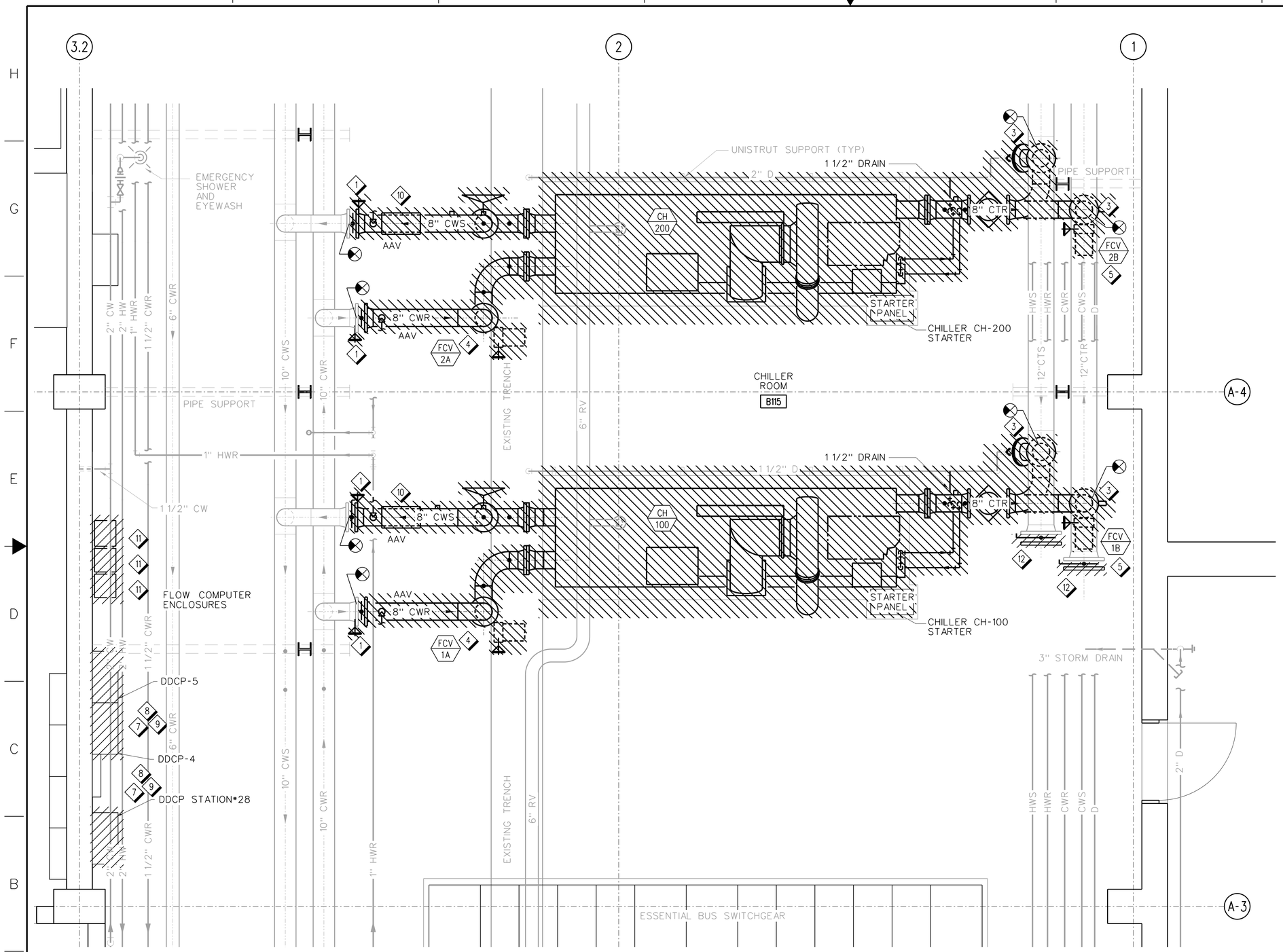

A8 / M102 BASEMENT CHILLER ROOM B115 HVAC EQUIPMENT AND PIPING PLAN - DEMOLITION

SCALE: 1/2" = 1'-0"

GENERAL NOTES:

A. REFER TO SHEET M001 FOR GENERAL MECHANICAL NOTES.

B. ONLY ONE PUMP AND ONE CHILLER MAY BE REMOVED FROM SERVICE AT ANY TIME.

C. DEMOLITION OF PIPING SECTIONS, CONTROL VALVES AND ISOLATION VALVES SHALL BE PERFORMED IN THE SAME ORDER AS THE EQUIPMENT THEY ARE ASSOCIATED WITH ARE REMOVED.

SHEET NOTES:

1. DEMOLISH SHUT-OFF VALVES ON CHILLED WATER SIDE WHERE INDICATED. INSTALL BLIND-FLANGE IN PLACE OF ISOLATION VALVE REMOVED.
2. DEMOLISH FLOW METER IN CHILLED WATER SUPPLY LINE.
3. DEMOLISH SHUT-OFF VALVES ON CONDENSER SIDE WHERE INDICATED. INSTALL BLIND FLANGE IN PLACE OF ISOLATION VALVE REMOVED.
4. DEMOLISH CONTROL VALVES, FCV-1A AND FCV-2A.
5. DEMOLISH CONTROL VALVES, FCV-1B AND FCV-2B.
6. HOUSEKEEPING PAD TO REMAIN.
7. CHILLER CONTROL PANELS DDCP-4, DDCP-5 AND DDCP STATION #28 HOUSING CONTROLS OF CHILLERS 100 THROUGH 400 ARE TO BE REMOVED AND REPLACED WITH NEW PANELS CONFIGURED FOR SCHNEIDER ELECTRIC CONTROLS. OPERATIONAL SWITCHOVER TO NEW DDC CONTROL PANELS SHALL BE ON A PRE-APPROVED PLAN. PLAN SHALL BE COORDINATED WITH AND APPROVED BY COR.
8. EXISTING CONTROLS ASSOCIATED WITH CONDENSER WATER SYSTEM SHALL REMAIN IN OPERATION UNTIL INSTALLATION OF NEW EQUIPMENT IS COMPLETE. ONCE NEW EQUIPMENT AND NEW CONTROL PANELS ARE INSTALLED IN PUMP HOUSE, DISCONNECT AND REMOVE EXISTING CONTROL WIRING AND CONTROL DEVICES.
9. ALL JCI CONTROLS SHALL BE REMOVED AND REPLACED WITH SCHNEIDER BACNET CONTROLS. ALL CHILLER AND COOLING TOWER CONTROL FUNCTION SHALL BE HANDLED BY NATIVE BACNET CONTROLLERS PROVIDED BY SCHNEIDER ELECTRIC.
10. DEMOLISH FLOW METER, TYPICAL TWO PER CHILLER. CONDENSER FLOW METER NOT SHOWN.
11. DEMOLISH FLOW CONTROL PANELS.
12. DEMOLISH BLIND FLANGE AND VALVE AND END OF CONDENSER HEADER.

KEY PLAN:

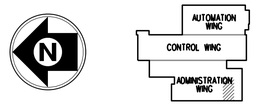

REV	APPROVED DATE	DESCRIPTION	JCN	REDLINE DATE	APVD

DEPARTMENT OF TRANSPORTATION
FEDERAL AVIATION ADMINISTRATION
ATO - TECHNICAL OPERATIONS — WESTERN SERVICE AREA

ARTCC

MAJOR MECHANICAL MODERNIZATION
BASEMENT CHILLER ROOM B115
HVAC EQUIPMENT & PIPING PLAN - DEMOLITION

DENVER — LONGMONT — CO

REVIEWED BY	SUBMITTED BY: PAUL TULENKO (DO NOT SIGN) — PROJECT ENGINEER	APPROVED BY: CALLEN R. COLLINS (DO NOT SIGN) — MGR: ENGINEERING - SEATTLE
DESIGNED: TU	ISSUED BY: ENGINEERING SERVICES ENROUTE/FSS	DATE / JCN: 1401893
DRAWN: JA		DRAWING NO: ZDV-1401893-M102 — REV
CHECKED		

ISSUED FOR:

DRAWING PRODUCED ON WSA MICROSTATION SYSTEM

rsb-1401893-m102.dgn 6/27/2018 10:31:12 AM John CTR Allen

EDM: zdv-1401893-m02.dgn

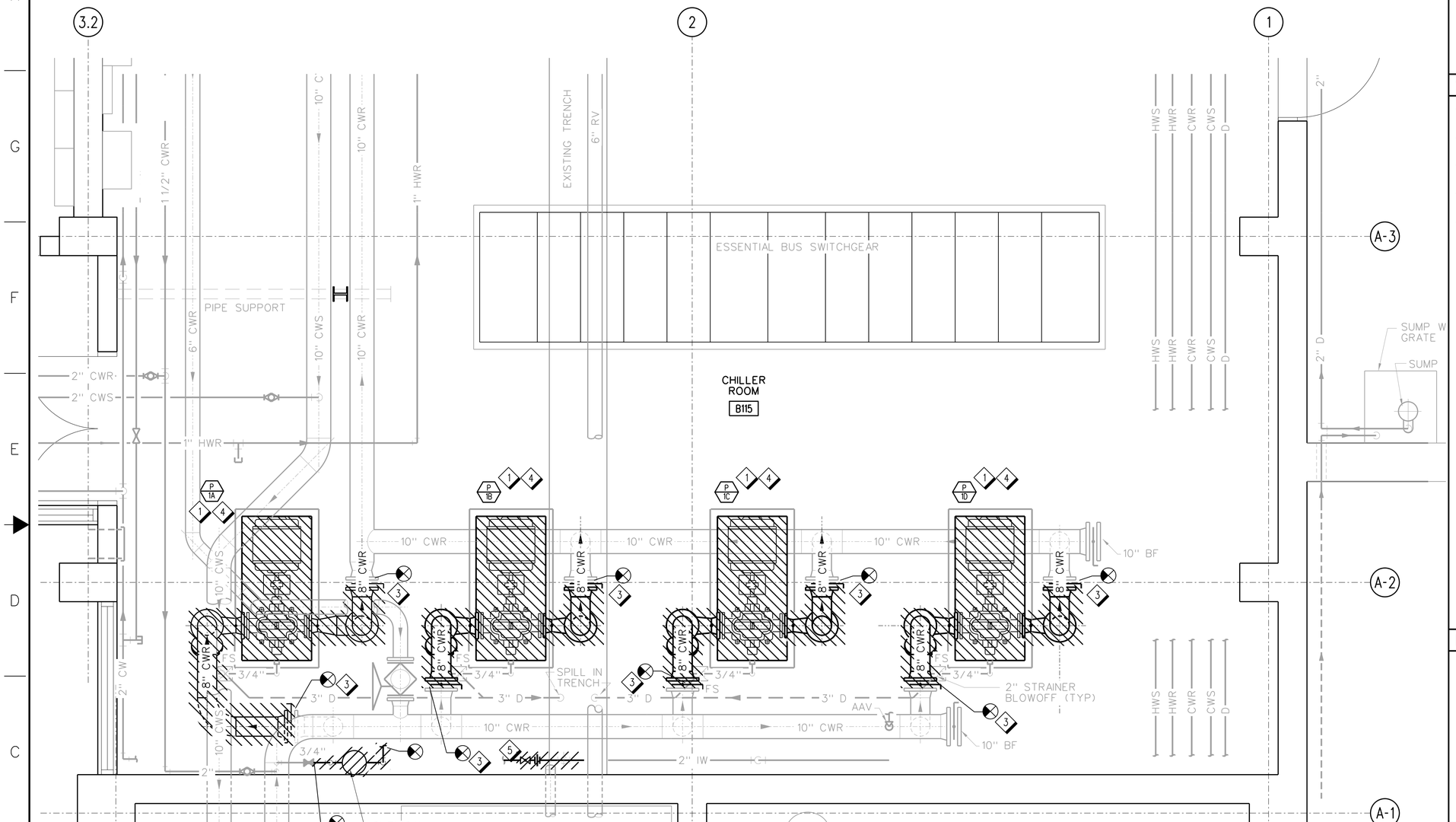

A8 / M103 BASEMENT CHILLER ROOM B115 HVAC EQUIPMENT AND PIPING PLAN - DEMOLITION

SCALE: 1/2" = 1'-0"

1' 0 1' 2' 5'

SCALE: 1/2" = 1'-0"

GENERAL NOTES:

A. REFER TO SHEET M001 FOR GENERAL MECHANICAL NOTES.

B. ONLY ONE PUMP AND ONE CHILLER MAY BE REMOVED FROM SERVICE AT ANY TIME.

C. DEMOLITION OF PIPING SECTIONS, CONTROL VALVES AND ISOLATION VALVES SHALL BE PERFORMED IN THE SAME ORDER AS THE EQUIPMENT THEY ARE ASSOCIATED WITH ARE REMOVED.

SHEET NOTES:

1. DEMOLISH PUMP AND MOTOR.
2. DEMOLISH CHEMICAL POT-FEEDER BACK TO ISOLATION VALVES.
3. REMOVE SHUT-OFF VALVES AS INDICATED. INSTALL BLIND FLANGE IN PLACE OF REMOVED VALVE.
4. HOUSEKEEPING PAD TO REMAIN.
5. DEMOLISH EXISTING PRESSURE REDUCING SYSTEM.

KEY PLAN:

AUTOMATION WING
CONTROL WING
ADMINISTRATION WING

REV	APPROVED DATE	DESCRIPTION	JCN	REDLINE DATE	APVD

DEPARTMENT OF TRANSPORTATION
FEDERAL AVIATION ADMINISTRATION
ATO - TECHNICAL OPERATIONS WESTERN SERVICE AREA

ARTCC

MAJOR MECHANICAL MODERNIZATION
BASEMENT CHILLER ROOM B115
HVAC EQUIPMENT & PIPING PLAN - DEMOLITION

DENVER LONGMONT CO

REVIEWED BY

SUBMITTED BY: PAUL TULENKO — PROJECT ENGINEER

APPROVED BY: CALLEN R. COLLINS — MGR: ENGINEERING - SEATTLE

DO NOT SIGN

DESIGNED TU
DRAWN JA
CHECKED

ISSUED BY: ENGINEERING SERVICES ENROUTE/FSS

DATE
JCN 1401893
DRAWING NO ZDV-1401893-M103
REV

ISSUED FOR:

DRAWING PRODUCED ON WSA MICROSTATION SYSTEM

zdv-1401893-m103.dgn 6/27/2018 10:14:14 AM John CTR Allen

EDM: zdv-1401893-m103.dgn

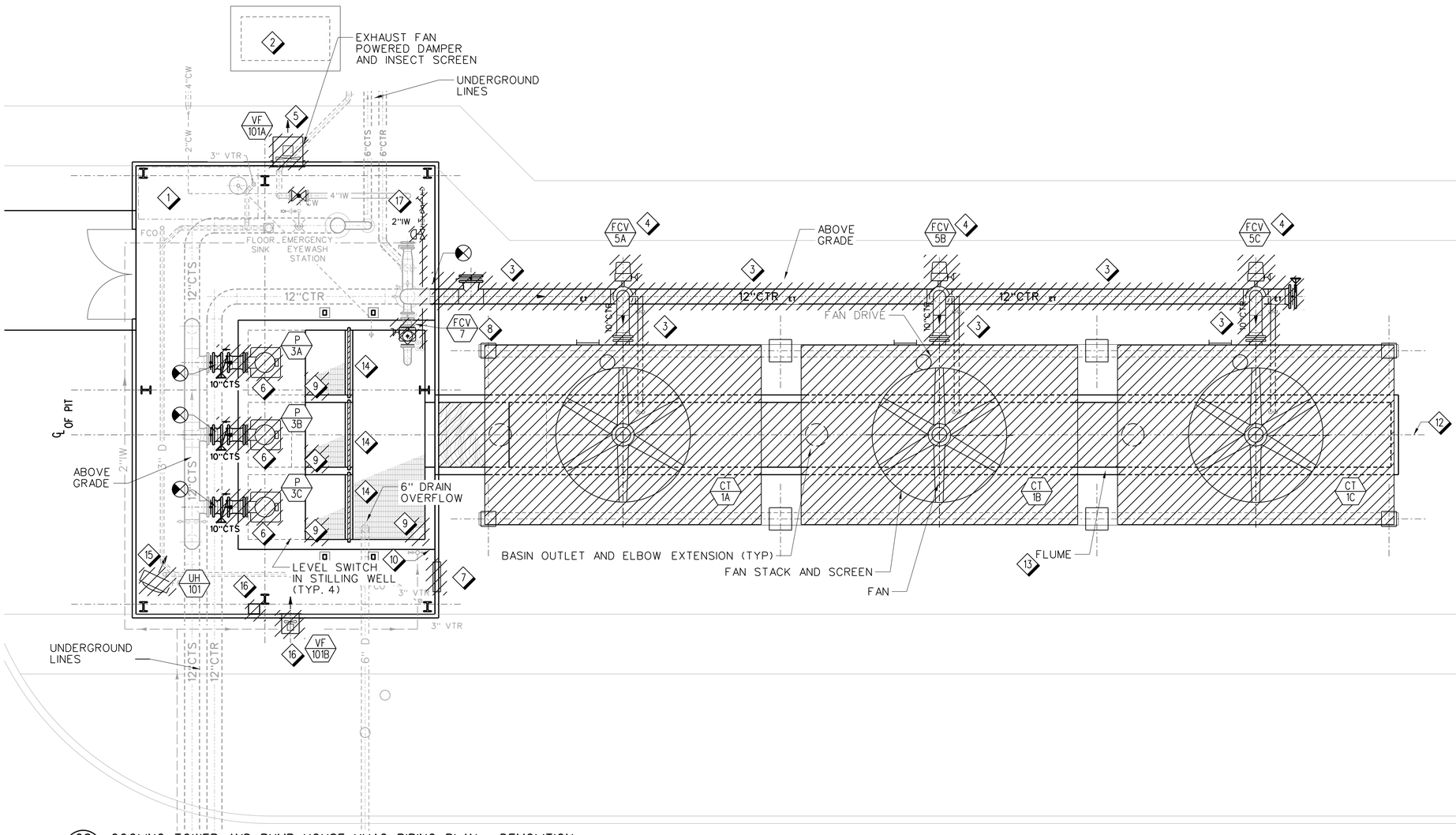

C8 / M104 COOLING TOWER AND PUMP HOUSE HVAC PIPING PLAN - DEMOLITION

SCALE: 1/4" = 1'-0"

GENERAL NOTES:

A. REFER TO SHEET M001 FOR GENERAL MECHANICAL NOTES.

B. DEMOLITION OF PIPING SECTIONS, CONTROL VALVES AND ISOLATION VALVES SHALL BE PERFORMED IN THE SAME ORDER AS THE EQUIPMENT THEY ARE ASSOCIATED WITH ARE REMOVED.

SHEET NOTES:

1. REMOVE AND STORE EXISTING CHEMICAL TREATMENT SYSTEM FOR REUSE.
2. DEMOLISH EXISTING BACKFLOW PREVENTER ASSEMBLY SERVING THE PUMP HOUSE. SECOND BACKFLOW PREVENTER TO REMAIN.
3. DEMOLISH 12" CTR HEADER AND RISERS TO COOLING TOWERS. DEMOLISH JACKET, HEAT TRACE AND INSULATION ON 12" CTR HEADER AND 3 RISERS TO SHUTOFF VALVES.
4. REMOVE EXISTING FLOW CONTROL VALVE. REMOVE EXISTING SHUTOFF VALVE.
5. DEMOLISH EXHAUST FAN AND ASSOCIATED ACTUATOR ON DAMPER.
6. DEMOLISH PUMP, ISOLATION VALVE AND CHECK VALVE.
7. DEMOLISH POWERED DAMPER AND ASSOCIATED DUCTWORK.
8. DEMOLISH BYPASS VALVE FCV-7.
9. DEMOLISH SUMP LEVEL SENSORS.
10. REMOVE EXISTING SUMP WATER LEVEL AND ALARM CONTROLS.
11. DEMOLISH DISCHARGE PIPING FROM PUMPS OUTLET FLANGE, TO INDICATED P.O.C. REMOVE CHECK VALVE, ISOLATION VALVE, AND HEADER SECTION AS SHOWN.
12. CENTERLINE OF EXISTING FLUME.
13. DEMOLISH EXISTING WOOD FLUME COVERS.
14. SALVAGE SCREENS AND USE AS TEMPLATE FOR NEW SCREENS.
15. DEMOLISH UNIT HEATER.
16. DEMOLISH SUPPLY FAN AND ASSOCIATED ACTUATOR ON DAMPER, AND SPACE TEMP SENSOR/SWITCH.
17. DEMOLISH CONTROL VALVES, METER, ISOLATION VALVES, BACKFLOW PREVENTER AND STRAINERS FOR MAKE UP WATER ASSEMBLY.

REV	APPROVED DATE	DESCRIPTION	JCN	REDLINE DATE	APVD

DEPARTMENT OF TRANSPORTATION
FEDERAL AVIATION ADMINISTRATION
ATO - TECHNICAL OPERATIONS — WESTERN SERVICE AREA

ARTCC

MAJOR MECHANICAL MODERNIZATION
COOLING TOWER AND PUMP HOUSE
HVAC PIPING PLAN - DEMOLITION

DENVER — LONGMONT — CO

REVIEWED BY

SUBMITTED BY: PAUL TULENKO — PROJECT ENGINEER

APPROVED BY: CALLEN R. COLLINS — MGR: ENGINEERING - SEATTLE

DO NOT SIGN

DESIGNED: TU
DRAWN: JA
CHECKED

ISSUED BY: ENGINEERING SERVICES ENROUTE/FSS

DATE
JCN: 1401893
DRAWING NO: ZDV-1401893-M104
REV

ISSUED FOR:

zdv-1401893-m104.dgn 6/27/2018 10:12:36 AM John CTR Allen

EDMS: zdv-1401893-m104.dgn

DRAWING PRODUCED ON WSA MICROSTATION SYSTEM

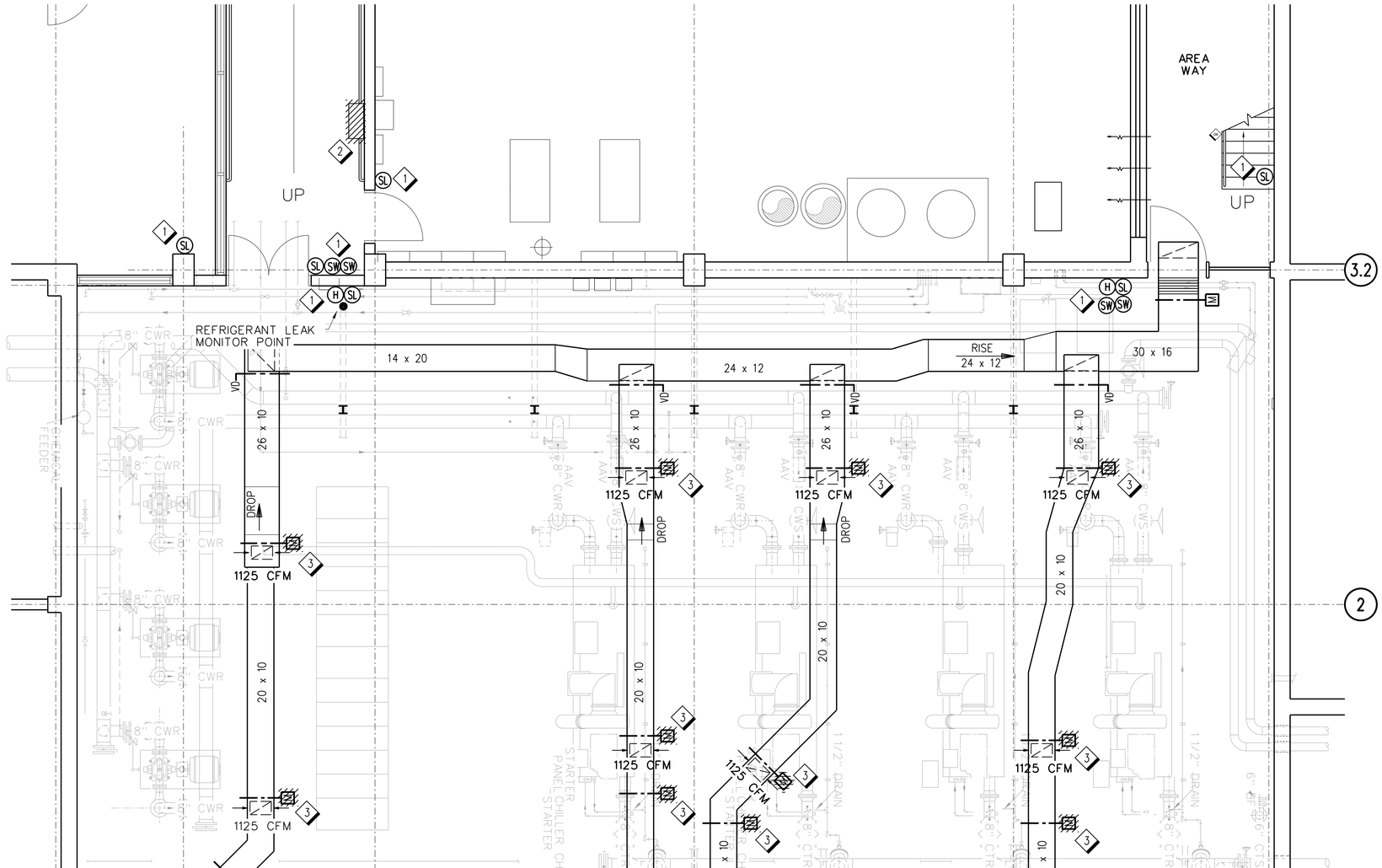

A8 / M105 CHILLER ROOM B115 VENTILATION PLAN - DEMOLITION

SCALE: 1/4" = 1'-0"

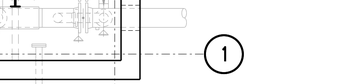

GENERAL NOTES:

A. REFER TO SHEET M001 FOR GENERAL MECHANICAL NOTES.

B. FIELD VERIFY LOCATION OF ALL EXISTING REFRIGERANT LEAK SENSORS, REFRIGERANT ALARM SILENCE SWITCH, EMERGENCY VENTILATION SWITCH, STROBE LIGHTS AND ALARM HORNS BEFORE START OF DEMOLITION WORK.

SHEET NOTES:

1. RETAIN EXISTING TUBING FOR REFRIGERANT LEAK DETECTION AND VISUAL/AUDIBLE DEVICES FOR USE WITH NEW PANEL. VERIFY FUNCTIONALITY PRIOR TO DEMOLITION WORK AND REPLACE ANY PARTS DAMAGED DURING DEMOLITION.
2. REMOVE AND SALVAGE EXISTING REFRIGERANT LEAK PANEL, TURN OVER TO SITE FOR SPARE PARTS.
3. DEMOLISH ACTUATORS AND TURN OVER TO SITE FOR SPARE PARTS.

KEY PLAN:

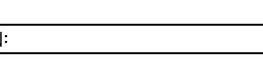

REV	APPROVED DATE	DESCRIPTION	JCN	REDLINE DATE	APVD

DEPARTMENT OF TRANSPORTATION
FEDERAL AVIATION ADMINISTRATION
ATO - TECHNICAL OPERATIONS — WESTERN SERVICE AREA

ARTCC

MAJOR MECHANICAL MODERNIZATION BASEMENT CHILLER ROOM B115 VENTILATION PLAN - DEMOLITION

DENVER — LONGMONT — CO

REVIEWED BY

SUBMITTED BY: PAUL TULENKO — PROJECT ENGINEER

APPROVED BY: CALLEN R. COLLINS — MGR: ENGINEERING - SEATTLE

DO NOT SIGN

DESIGNED: TU
DRAWN: JA
CHECKED:

ISSUED BY: ENGINEERING SERVICES ENROUTE/FSS

DATE:
JCN: 1401893
DRAWING NO: ZDV-1401893-M105
REV:

ISSUED FOR:

zdv-1401893-m105.dgn 7/10/2018 9:36:44 PM John CTR Allen

EDM: zdv-1401893-m105.dgn

DRAWING PRODUCED ON WSA MICROSTATION SYSTEM

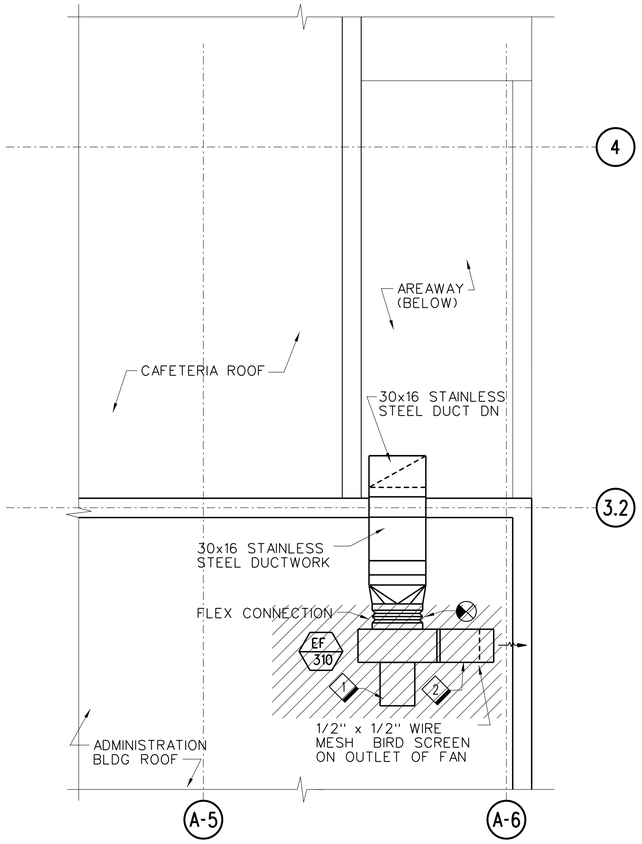

C8 M106 PARTIAL ROOF PLAN
SCALE: 1/4" = 1'-0"

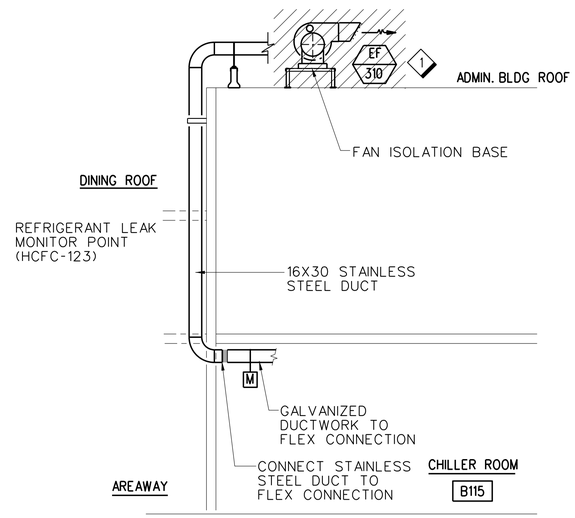

C5 M106 SECTION - ROOF EXHAUST FAN DUCTING
SCALE: 1/4" = 1'-0"

4' 0 4' 8'
SCALE: 1/4" = 1'-0"

GENERAL NOTES:

A. REFER TO SHEET M001 FOR GENERAL MECHANICAL NOTES.

B. DEMOLITION OF EF-310 SHALL TAKE PLACE WHILE CHILLER PLANT IS INOPERATIVE.

SHEET NOTES:

1. DEMOLISH EXHAUST FAN EF-310 AND FLEXIBLE DUCT. STAINLESS STEEL DUCT TO REMAIN. PROTECT AND MAINTAIN INTEGRITY OF THE ROOFING SYSTEM DURING DEMOLITION.
2. DEMOLISH DISCHARGE FITTING.

KEY PLAN:

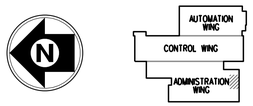

REV	APPROVED DATE	DESCRIPTION	JCN	REDLINE DATE	APVD

DEPARTMENT OF TRANSPORTATION
FEDERAL AVIATION ADMINISTRATION
ATO - TECHNICAL OPERATIONS WESTERN SERVICE AREA

ARTCC

MAJOR MECHANICAL MODERNIZATION BASEMENT CHILLER ROOM B115 VENTILATION DETAILS - DEMOLITION

DENVER LONGMONT CO

REVIEWED BY

SUBMITTED BY: PAUL TULENKO — PROJECT ENGINEER
APPROVED BY: CALLEN R. COLLINS — MGR: ENGINEERING - SEATTLE

DO NOT SIGN

DESIGNED: TU
DRAWN: JA
CHECKED:

ISSUED BY: ENGINEERING SERVICES ENROUTE/FSS

DATE:
JCN: 1401893
DRAWING NO: ZDV-1401893-M106
REV:

ISSUED FOR:

rdn-1401893-m106.dgn 6/27/2018 10:16:47 AM John CTR Allen

EDM: zdv-1401893-m106.dgn

DRAWING PRODUCED ON WSA MICROSTATION SYSTEM

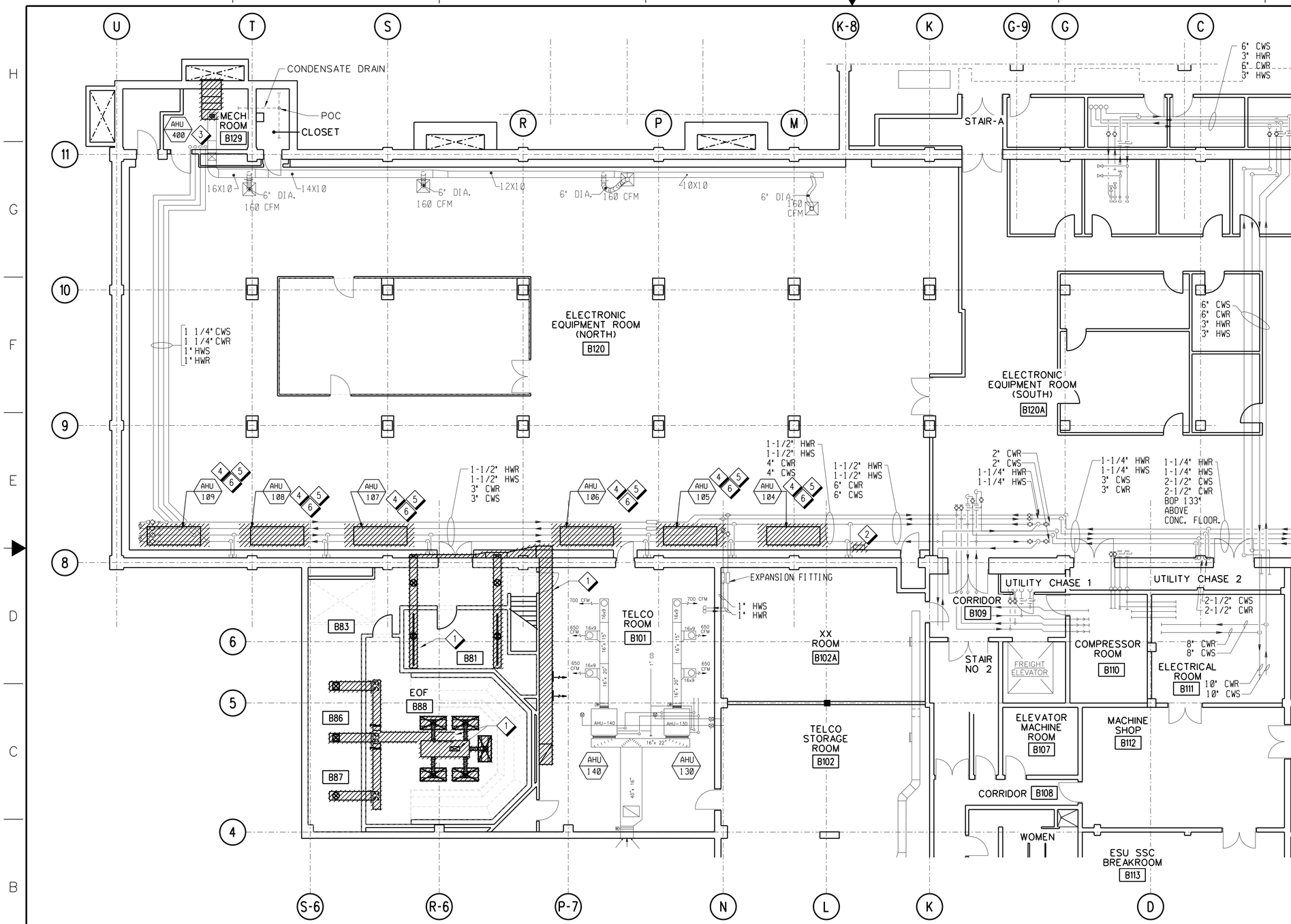

A8 / M111 BASEMENT ROOM B88/B101/B102/B120 HVAC EQUIPMENT AND PIPING PLAN - DEMOLITION

SCALE: 1/8" = 1'-0"

8' 0 8' 16'

SCALE: 1/8" = 1'-0"

GENERAL NOTES:

A. REFER TO SHEET M001 FOR GENERAL MECHANICAL NOTES.

B. ONLY 1 UNIT CAN BE REMOVED FROM SERVICE AT A TIME.

C. FOR EACH UNIT REMOVED, PROVIDE HARD FLOOR UNDER FLOOR AIR DAMS TO ISOLATE AIR HANDLING UNIT DURING DEMOLITION TO MAINTAIN NORMAL AIRFLOW.

SHEET NOTES:

1. DEMOLISH DUCTWORK BACK TO MAIN PLENUM CONNECTION.
2. DISCONNECT AND DEMOLISH CONTROL PANEL ASSOCIATED WITH B120 COMPUTER ROOM AIR HANDLING UNITS AND AHU-400.
3. DEMO AHU-400. DEMO PIPING TO ISOLATION VALVES, BUT RETAIN DETAILS AS NEW PIPE WILL BE SAME. TURN OVER CONTROLS TO SITE FOR USE AS SPARE PARTS.
4. DEMOLISH AIR HANDLING UNITS INCLUDING FLOOR STANDS, VIBRATION ISOLATORS AND DISCHARGE ELBOWS.
5. DEMOLISH PIPING ASSOCIATED WITH AHU BACK TO BRANCH ISOLATION VALVES.
6. COORDINATE EXACT LOCATION OF TEMPERATURE AND HUMIDITY SENSORS WITH COR.

KEY PLAN:

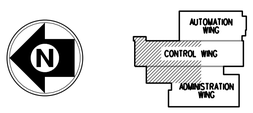

REV	APPROVED DATE	DESCRIPTION	JCN	REDLINE DATE	APVD

DEPARTMENT OF TRANSPORTATION
FEDERAL AVIATION ADMINISTRATION
ATO - TECHNICAL OPERATIONS WESTERN SERVICE AREA

ARTCC

MAJOR MECHANICAL MODERNIZATION
BASEMENT ROOMS B88/B101/B102/B120
HVAC EQUIPMENT & PIPING PLAN - DEMOLITION

DENVER LONGMONT CO

REVIEWED BY

SUBMITTED BY: PAUL TULENKO — PROJECT ENGINEER

APPROVED BY: CALLEN R. COLLINS — MGR: ENGINEERING - SEATTLE

DO NOT SIGN

DESIGNED DH
DRAWN JA
CHECKED

ISSUED BY: ENGINEERING SERVICES ENROUTE/FSS

DATE
JCN 1401893
DRAWING NO ZDV-1401893-M111
REV

ISSUED FOR:

zdv-1401893-m111.dgn 7/12/2018 10:14:44 AM John CTR Allen

EDM: zdv-1401893-m111.dgn

DRAWING PRODUCED ON WSA MICROSTATION SYSTEM

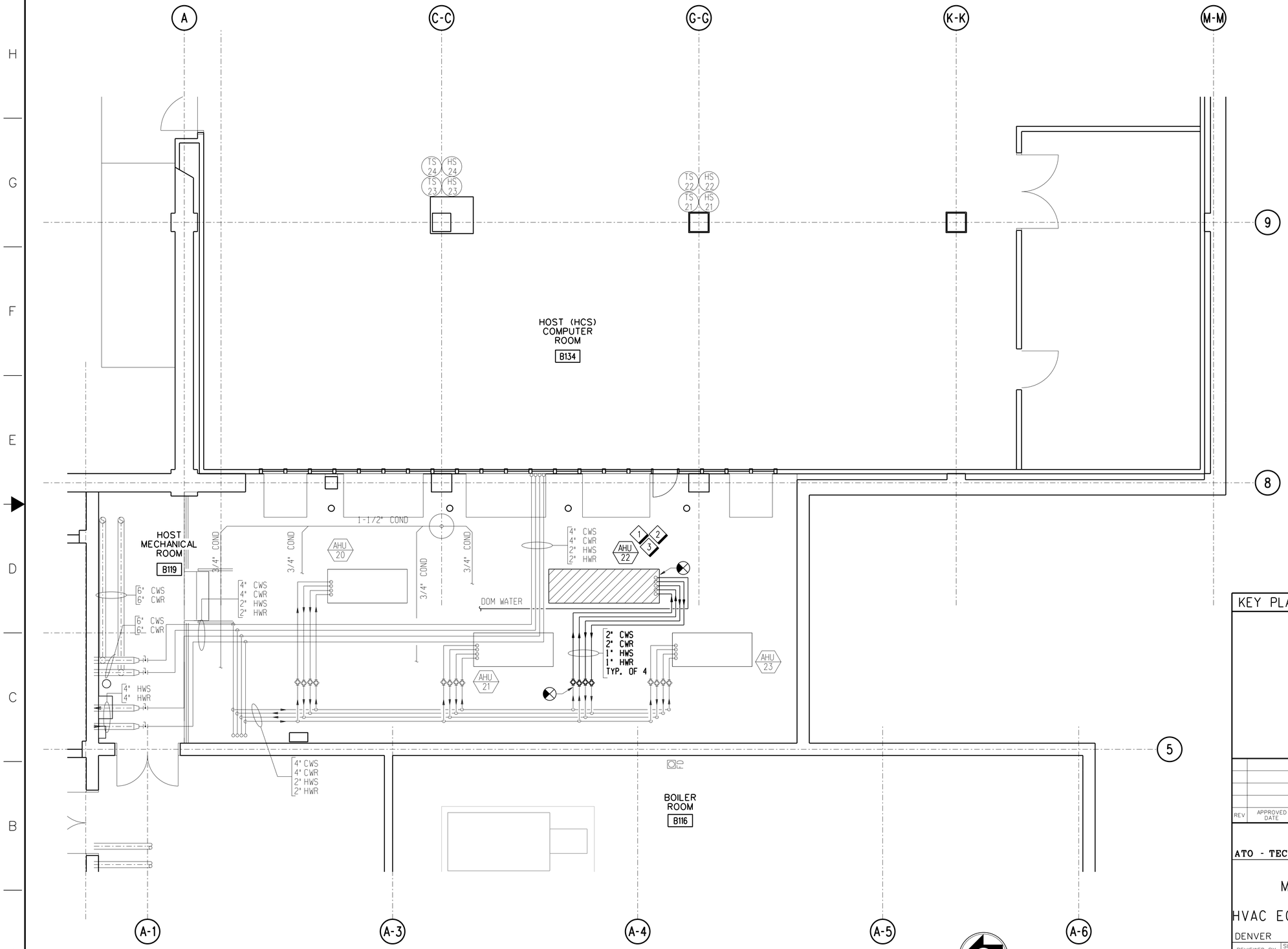

A8 / M112 BASEMENT ROOM B119 HVAC EQUIPMENT AND PIPING PLAN - DEMOLITION

SCALE: 1/4" = 1'-0"

GENERAL NOTES:

A. REFER TO SHEET M001 FOR GENERAL MECHANICAL NOTES.

B. ONLY 1 COMPUTER ROOM AIR HANDLING UNIT MAY BE DOWN AT ANY TIME. COORDINATE SHUTDOWNS WITH COR.

C. CHWS/R AND HWS/R PIPING SERVICES OTHER SPACES CANNOT BE INTERRUPTED. BRANCH PIPING TO AH-22 IS THE ONLY PIPING TO BE ISOLATED.

SHEET NOTES:

1. DEMOLISH AIR HANDLING UNIT INCLUDING FLOOR STAND, VIBRATION ISOLATOR AND DISCHARGE ELBOW.
2. DEMOLISH PIPING AND INSULATION ASSOCIATED WITH AHU BACK TO BRANCH ISOLATION VALVES INCLUDING THE ISOLATION VALVES ON THE CWS, CWR, HWS AND HWR LINES. UTILIZE EXISTING CWS AND CWR VALVES FOR INSTALLATION.
3. PROVIDE HARD FLOOR UNDERFLOOR AIR DAMS TO ISOLATE AIR HANDLING UNIT DURING DEMOLITION TO MAINTAIN NORMAL AIRFLOW.

KEY PLAN:

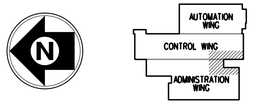

REV	APPROVED DATE	DESCRIPTION	JCN	REDLINE DATE	APVD

DEPARTMENT OF TRANSPORTATION
FEDERAL AVIATION ADMINISTRATION
ATO - TECHNICAL OPERATIONS — WESTERN SERVICE AREA

ARTCC

MAJOR MECHANICAL MODERNIZATION
BASEMENT ROOM B119
HVAC EQUIPMENT & PIPING PLAN - DEMOLITION

DENVER — LONGMONT — CO

REVIEWED BY

SUBMITTED BY: PAUL TULENKO — PROJECT ENGINEER

APPROVED BY: CALLEN R. COLLINS — MGR: ENGINEERING - SEATTLE

DO NOT SIGN

DESIGNED: DH
DRAWN: JA
CHECKED:

ISSUED BY: ENGINEERING SERVICES ENROUTE/FSS

DATE:
JCN: 1401893
DRAWING NO: ZDV-1401893-M112
REV:

ISSUED FOR:

zdv-1401893-m112.dgn 7/2/2018 4:13:48 PM John CTR Allen

EDM: zdv-1401893-m112.dgn

DRAWING PRODUCED ON WSA MICROSTATION SYSTEM

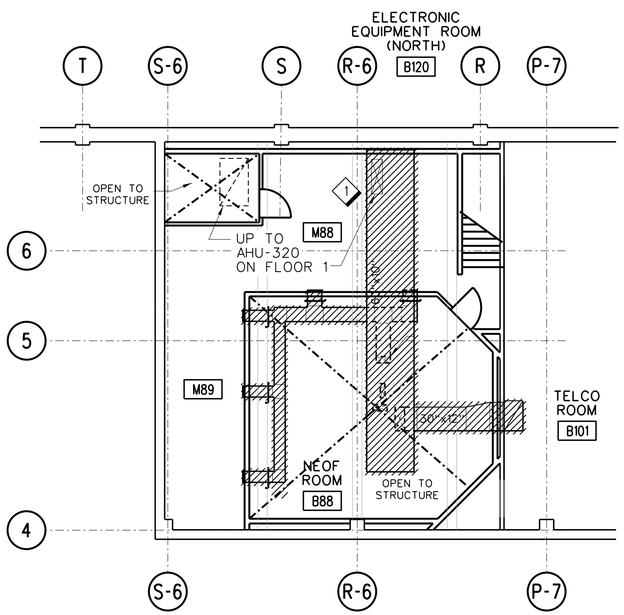

B7 / M113 NEOF MEZZANINE HVAC PLAN - DEMOLITION

SCALE: 1/8" = 1'-0"

GENERAL NOTES

A. REFER TO SHEET M001 FOR GENERAL MECHANICAL NOTES.

SHEET NOTES

1. DEMOLISH DUCTWORK BACK TO THE CONNECTION TO AHU-320.

KEY PLAN:

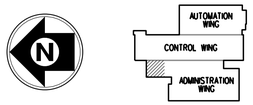

REV	APPROVED DATE	DESCRIPTION	JCN	REDLINE DATE	APVD

DEPARTMENT OF TRANSPORTATION
FEDERAL AVIATION ADMINISTRATION
ATO - TECHNICAL OPERATIONS WESTERN SERVICE AREA

ARTCC

MAJOR MECHANICAL MODERNIZATION
NEOF MEZZANINE
HVAC PLAN - DEMOLITION

DENVER LONGMONT CO

REVIEWED BY

SUBMITTED BY: PAUL TULENKO — PROJECT ENGINEER

APPROVED BY: CALLEN R. COLLINS — MGR: ENGINEERING - SEATTLE

DO NOT SIGN

DESIGNED: DH
DRAWN: JA
CHECKED:

ISSUED BY: ENGINEERING SERVICES ENROUTE/FSS

DATE:
JCN: 1401893
DRAWING NO: ZDV-1401893-M113
REV:

ISSUED FOR:

N

8' 0 8' 16'

SCALE: 1/8" = 1'-0"

rdp-1401893-m113.dgn 6/27/2018 10:19:30 AM John CTR Allen

DGN: zdv-1401893-m113.dgn

DRAWING PRODUCED ON WSA MICROSTATION SYSTEM

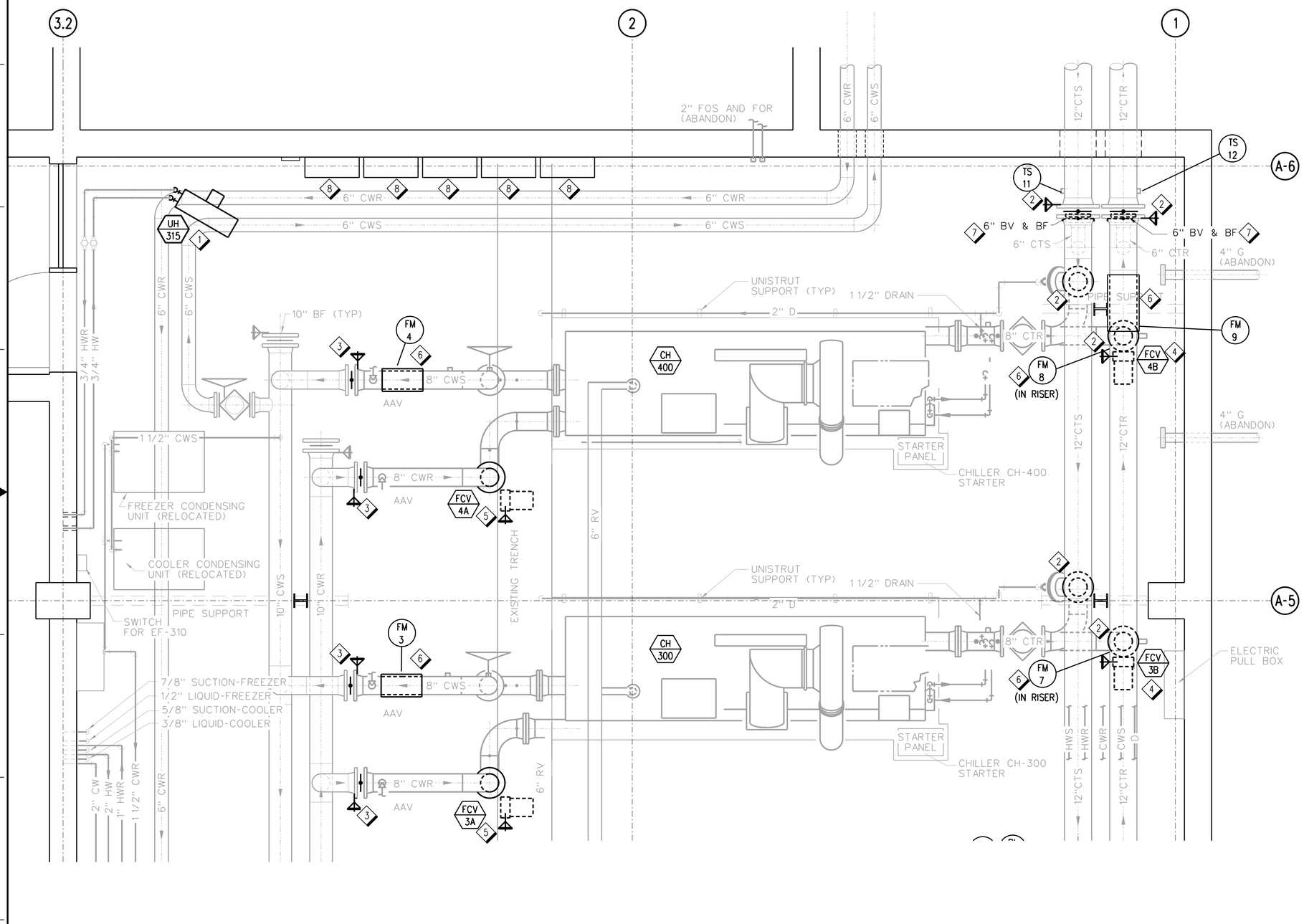

A8 / M201 BASEMENT CHILLER ROOM B115 HVAC EQUIPMENT AND PIPING PLAN
SCALE: 1/2" = 1'-0"

1' 0 1' 2' 5'
SCALE: 1/2" = 1'-0"

GENERAL NOTES:

A. REFER TO SHEET M001 FOR GENERAL MECHANICAL NOTES.

SHEET NOTES:

1. PROVIDE HOT WATER UNIT HEATER PLUMBED TO ISOLATION VALVES.
2. PROVIDE ISOLATION VALVES ON CONDENSER SIDE WHERE INDICATED.
3. PROVIDE ISOLATION VALVES ON CHILLED WATER SIDE WHERE INDICATED.
4. PROVIDE CONDENSER WATER FLOW CONTROL VALVE FCV-3B AND FCV-4B.
5. PROVIDE CHILLED WATER FLOW CONTROL VALVE FCV-3A AND FCV-4A.
6. PROVIDE FLOW METERS WHERE INDICATED.
7. PROVIDE ISOLATION VALVE AND BLIND FLANGE IN REMOVED CONDENSER BYPASS BRANCH.
8. PROVIDE DDCP ENCLOSURES (5) ALONG SOUTH WALL. COORDINATE WITH ELECTRICAL FOR POWER REQUIREMENTS.

KEYPLAN:

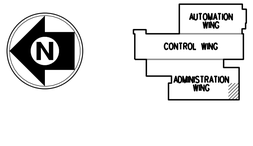

REV	APPROVED DATE	DESCRIPTION	JCN	REDLINE DATE	APVD

DEPARTMENT OF TRANSPORTATION
FEDERAL AVIATION ADMINISTRATION
ATO - TECHNICAL OPERATIONS WESTERN SERVICE AREA

ARTCC
MAJOR MECHANICAL MODERNIZATION
BASEMENT CHILLER ROOM B115
HVAC EQUIPMENT AND PIPING PLAN

DENVER LONGMONT CO

REVIEWED BY
SUBMITTED BY: PAUL TULENKO — PROJECT ENGINEER
APPROVED BY: CALLEN R. COLLINS — MGR: ENGINEERING - SEATTLE
DO NOT SIGN
DESIGNED TU
DRAWN JA
CHECKED
ISSUED BY: ENGINEERING SERVICES ENROUTE/FSS
DATE
JCN 1401893
DRAWING NO ZDV-1401893-M201
REV

ISSUED FOR:

tch-1401893-m201.dgn 6/27/2018 10:23:17 AM John CTR Allen

EDM: zdv-1401893-m201.dgn

DRAWING PRODUCED ON WSA MICROSTATION SYSTEM

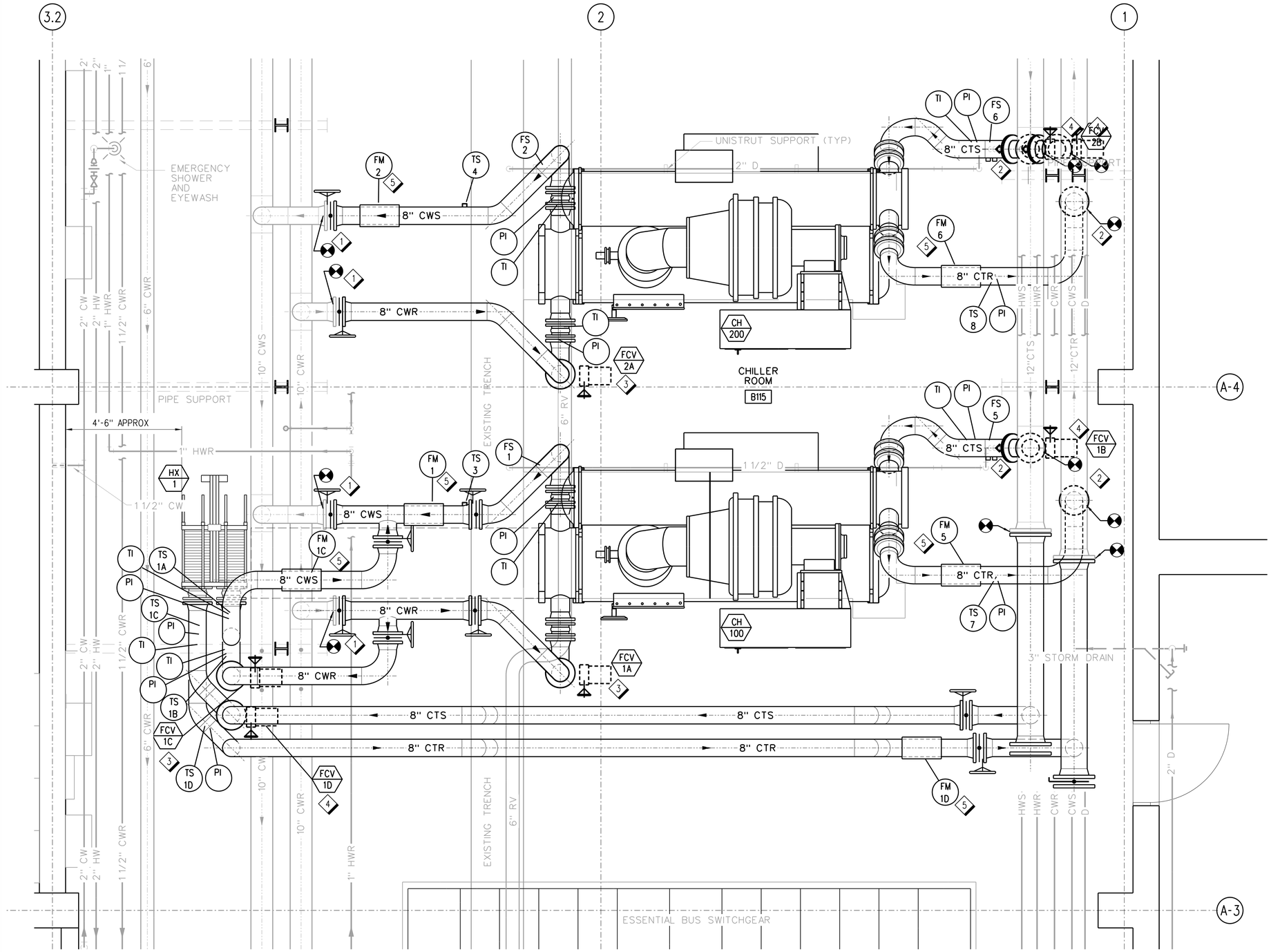

A8 / M202 BASEMENT CHILLER ROOM B115 HVAC EQUIPMENT AND PIPING PLAN
SCALE: 1/2" = 1'-0"

1' 0 1' 2' 5'
SCALE: 1/2" = 1'-0"

GENERAL NOTES:

A. REFER TO SHEET M001 FOR GENERAL MECHANICAL NOTES.

B. CONSULT WITH DESIGNATED POINT OF CONTACT FROM PROGRAM OFFICE WORKING ON REPLACEMENT OF BUILDING AUTOMATION SYSTEM NATIONALLY FOR DIFFERENT DESIGNATION OF NEW PANELS. REFER TO SPECIFICATIONS SECTION 230900 FOR NAME AND POINT OF CONTACT INFORMATION.

SHEET NOTES:

1. PROVIDE ISOLATION VALVES ON CHILLED WATER SIDE WHERE INDICATED.
2. PROVIDE ISOLATION VALVES ON CONDENSER SIDE WHERE INDICATED.
3. PROVIDE CHILLED WATER CONTROL VALVES FCV-1A, FCV-1C AND FCV-2A.
4. PROVIDE CONDENSER WATER CONTROL VALVES FCV-1B, FCV-1D AND FCV-2B.
5. PROVIDE FLOWMETER. REFER TO FLOW DIAGRAM ON SHEET M711 AND M712. COMMUNICATE WITH BACNET VIA RS485.

KEYPLAN:

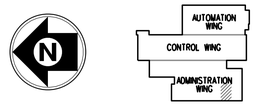

REV	APPROVED DATE	DESCRIPTION	JCN	REDLINE DATE	APVD

DEPARTMENT OF TRANSPORTATION
FEDERAL AVIATION ADMINISTRATION
ATO - TECHNICAL OPERATIONS — WESTERN SERVICE AREA

ARTCC

MAJOR MECHANICAL MODERNIZATION BASEMENT CHILLER ROOM B115 HVAC EQUIPMENT AND PIPING PLAN

DENVER — LONGMONT — CO

REVIEWED BY	SUBMITTED BY: PAUL TULENKO (DO NOT SIGN)	APPROVED BY: CALLEN R. COLLINS (DO NOT SIGN)
	PROJECT ENGINEER	MGR: ENGINEERING - SEATTLE
DESIGNED TU	ISSUED BY: ENGINEERING SERVICES ENROUTE/FSS	DATE / JCN 1401893
DRAWN JA		DRAWING NO: ZDV-1401893-M202 — REV
CHECKED		

ISSUED FOR:

EDM: zdv-1401893-m202.dgn

rtc-1401893-m202.dgn 6/27/2018 10:36:39 AM John CTR Allen

DRAWING PRODUCED ON WSA MICROSTATION SYSTEM

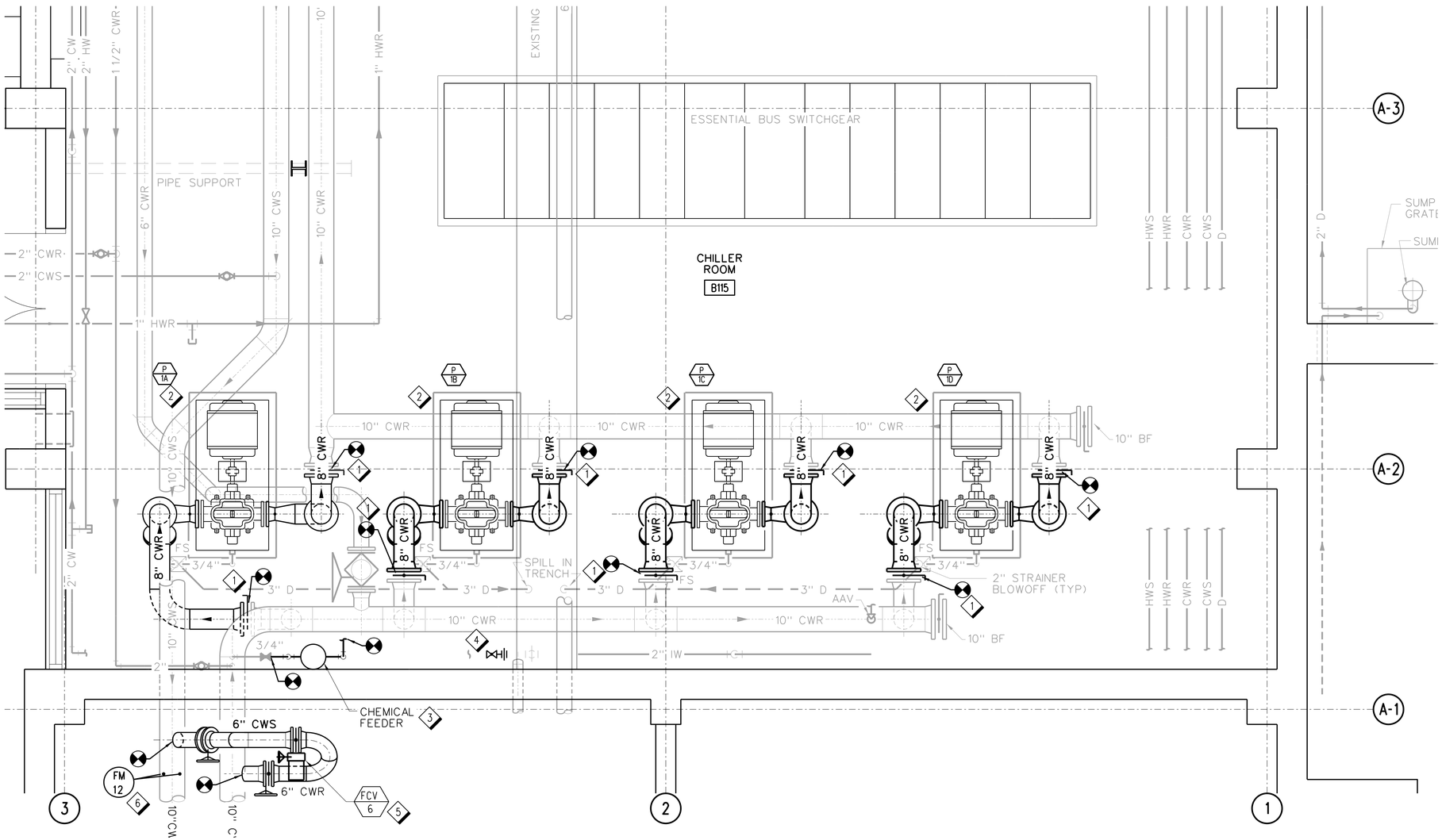

A8 / M203 BASEMENT CHILLER ROOM B115 HVAC EQUIPMENT AND PIPING PLAN

SCALE: 1/2" = 1'-0"

1' 0 1' 2' 5'

SCALE: 1/2" = 1'-0"

GENERAL NOTES:

A. REFER TO SHEET M001 FOR GENERAL MECHANICAL NOTES.

SHEET NOTES:

1. PROVIDE SHUT-OFF VALVES WHERE INDICATED.
2. PROVIDE PUMPS AND MOTORS WITH NEW VFD(S). SEE ELECTRICAL SHEET E203.
3. PROVIDE CHEMICAL POT-FEEDER.
4. PROVIDE PRESSURE REDUCING SYSTEM.
5. PROVIDE CHILLED WATER BYPASS PIPING, ISOLATION VALVES AND FCV-6.
6. HOT TAP INSERTION TYPE FLOWMETER. REFER TO FLOW DIAGRAM ON SHEET M711. COMMUNICATE WITH BACNET VIA RS485.

KEYPLAN:

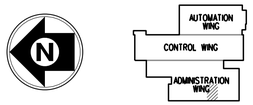

REV	APPROVED DATE	DESCRIPTION	JCN	REDLINE DATE	APVD

DEPARTMENT OF TRANSPORTATION
FEDERAL AVIATION ADMINISTRATION
ATO - TECHNICAL OPERATIONS WESTERN SERVICE AREA

ARTCC

MAJOR MECHANICAL MODERNIZATION
BASEMENT CHILLER ROOM B115
HVAC EQUIPMENT AND PIPING PLAN

DENVER LONGMONT CO

REVIEWED BY

SUBMITTED BY: PAUL TULENKO — PROJECT ENGINEER

APPROVED BY: CALLEN R. COLLINS — MGR: ENGINEERING - SEATLE

DO NOT SIGN

DESIGNED	TU	ISSUED BY	DATE	JCN
DRAWN	JA	ENGINEERING SERVICES ENROUTE/FSS	DRAWING NO	REV
CHECKED			ZDV-1401893-M203	

ISSUED FOR:

DRAWING PRODUCED ON WSA MICROSTATION SYSTEM

EDM: zdv-1401893-m203.dgn

rd-1401893-m203.dgn 6/27/2018 10:34:51 AM John CTR Allen

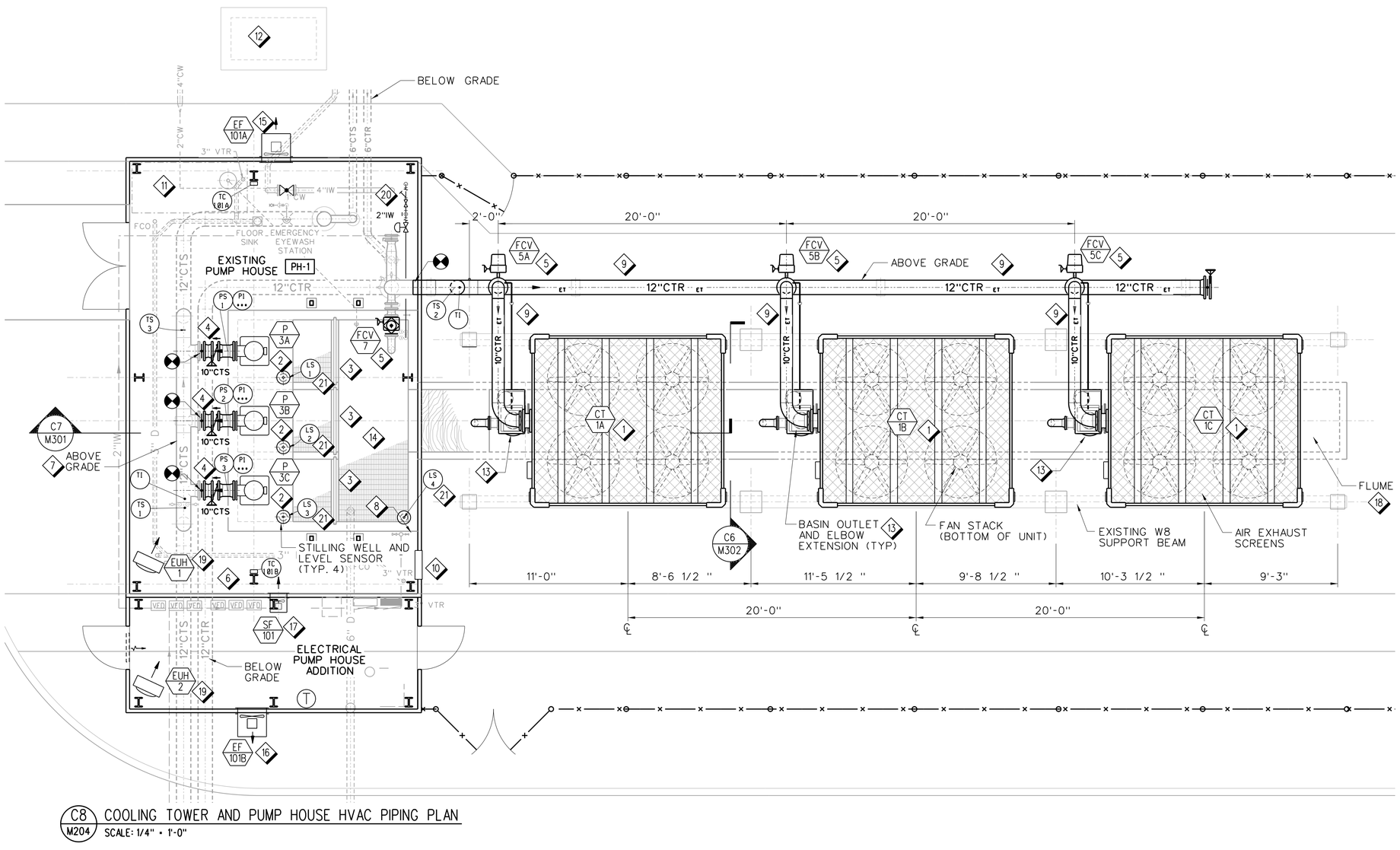

C8 M204 COOLING TOWER AND PUMP HOUSE HVAC PIPING PLAN

SCALE: 1/4" = 1'-0"

4' 0 4' 8'

SCALE: 1/4" = 1'-0"

GENERAL NOTES:

A. REFER TO SHEET M001 FOR GENERAL MECHANICAL NOTES.

B. REFER TO ELECTRICAL DRAWING SHEET E301 FOR VARIABLE FREQUENCY DRIVES.

SHEET NOTES:

1. PROVIDE COOLING TOWERS WITH VFD CONTROL.
2. PROVIDE PUMPS WITH VFD CONTROL.
3. PROVIDE SUMP SCREENS: 304 SS WIRE MESH, 1/2" SQUARE OPENINGS WITH 0.120" dia WIRE LOCK CRIMP WEAVE (65% OPEN AREA). USE EXITING SCREENS AS TEMPLATES.
4. PROVIDE CHECK VALVES AND ISOLATION VALVES.
5. PROVIDE FLOW CONTROL AND ISOLATION VALVES (REFER TO SHEET M302).
6. DDC CONTROL PANELS FOR CONDENSER WATER SYSTEM. EXPAND DDCS NETWORK FROM CHILLER ROOM B116 TO PUMP HOUSE USING EXISTING CONDUIT. INSTALL NEW SCHNEIDER ELECTRIC CONTROLS.
7. CLEAN PIPE OF EXTERNAL CORROSION, PIPING AND PAINT.
8. REPLACE EXISTING WATER LEVEL SENSOR CONTROLS AND EXISTING MAKE-UP WATER CONTROLS.
9. PROVIDE CTR MAIN HEADER AND COOLING TOWER RISER PIPING. UTILIZE EXISTING PIPE SUPPORTS DURING INSTALLATION. ALL ABOVE GRADE EXTERNAL PIPING TO BE INSULATED, HEAT TRACED AND JACKETED.
10. PROVIDE LOUVER AND ACTUATOR, MATCH EXISTING.
11. CHEMICAL WATER TREATMENT SYSTEM LOCATION. CHEMICAL TREATMENT CONTRACTOR RESPONSIBLE FOR INSTALLATION OR REPLACEMENT OF SYSTEM.
12. PROVIDE BACKFLOW PREVENTER TO SERVICE PUMP HOUSE.
13. PROVIDE STAINLESS STEEL 10" FLANGED TOWER COOLING WATER DISCHARGE PIPE.
14. UPON COMPLETION OF WORK REMOVE DEBRIS FROM BASINS.
15. PROVIDE EXHAUST FAN IN PUMP HOUSE WITH ACTUATOR FOR DAMPER.
16. PROVIDE EXHAUST FAN, ACTUATOR AND DAMPER IN PUMP HOUSE ADDITION.
17. PROVIDE SUPPLY FAN IN PUMP HOUSE WITH ACTUATOR FOR DAMPER. FAN IS LOCATED IN EXTERIOR WALL ABOVE PUMPHOUSE ADDITION ROOF.
18. PROVIDE FIBERGLASS FLUME COVERS. COVERS MUST BE SIZED TO ALLOW REMOVAL BY SINGLE PERSON WITHOUT HOIST.
19. PROVIDE UNIT HEATERS. MOUNT SO THAT BOTTOM OF HEATER IS NO HIGHER THAN 8'-0" AFF.
20. PROVIDE CONTROL VALVES, METER, ISOLATION VALVES, BACKFLOW PREVENTER AND STRAINERS FOR MAKE UP WATER ASSEMBLY.
21. PROVIDE LEVEL SENSORS FOR BASIN AND PUMP SUMPS.

REV	APPROVED DATE	DESCRIPTION	JCN	REDLINE DATE	APVD

DEPARTMENT OF TRANSPORTATION
FEDERAL AVIATION ADMINISTRATION
ATO - TECHNICAL OPERATIONS WESTERN SERVICE AREA

ARTCC

MAJOR MECHANICAL MODERNIZATION COOLING TOWER AND PUMP HOUSE HVAC PIPING PLAN

DENVER LONGMONT CO

REVIEWED BY

SUBMITTED BY: PAUL TULENKO — PROJECT ENGINEER

APPROVED BY: CALLEN R. COLLINS — MGR: ENGINEERING - SEATTLE

DO NOT SIGN

DESIGNED TU
DRAWN JA
CHECKED

ISSUED BY: ENGINEERING SERVICES ENROUTE/FSS

DATE
JCN 1401893
DRAWING NO ZDV-1401893-M204
REV

ISSUED FOR:

tch-1401893-m204.dgn 6/27/2018 10:39:07 AM John CTR Allen

EDM: zdv-1401893-m204.dgn

DRAWING PRODUCED ON WSA MICROSTATION SYSTEM

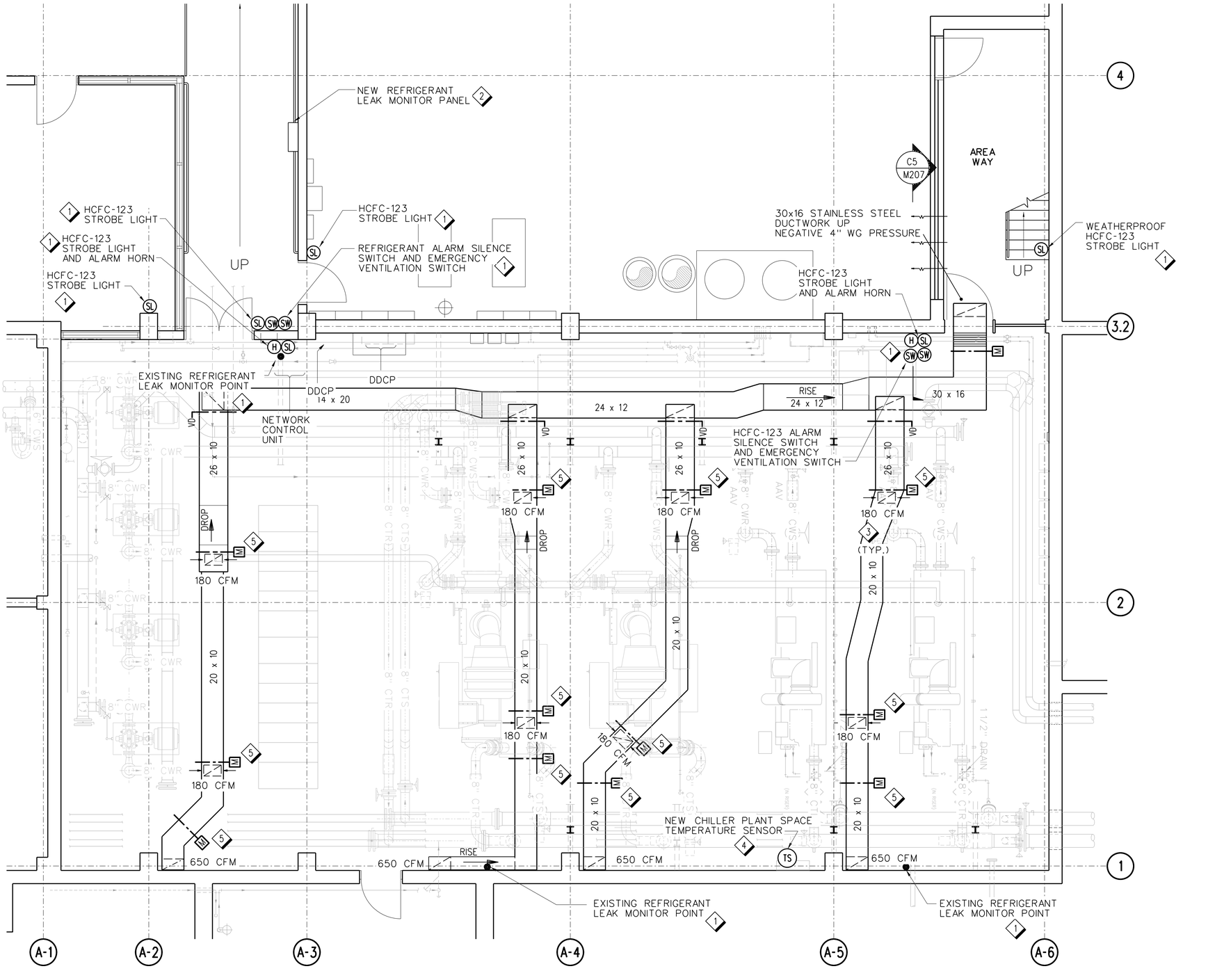

A8 / M205 BASEMENT CHILLER ROOM B115 VENTILATION PLAN - NEW WORK

SCALE: 1/4" = 1'-0"

4' 0 4' 8'

SCALE: 1/4" = 1'-0"

GENERAL NOTES:

A. REFER TO SHEET M001 FOR GENERAL MECHANICAL NOTES.

B. NEW REFRIGERANT LEAK MONITOR PANEL FOR R123.

C. NEW REFRIGERANT LEAK MONITOR SHALL SAMPLE AND MONITOR ALL EXISTING POINTS.

D. REFRIGERANT MONITORING AND LEAK DETECTION SHAL BE ABLE TO ACTIVATE ALARM RELAY ACTION AT A MINIMUM OF FIVE RELAY POSITIONS (4 CHILLERS AND EXHAUST FAN).

SHEET NOTES:

1. NEW REFRIGERANT LEAK SENSOR(S), REFRIGERANT ALARM SILENCE SWITCH(ES), EMERGENCY VENTILATION SWITCH(ES), STROBE LIGHT(S) AND ALARM HORN(S). CONNECT TO NEW REFRIGERANT LEAK MONTOR PANEL.
2. NEW R123 LEAK MONITOR PANEL. RUN NEW CONDUCTOR TO REFRIGERANT LEAK SENSORS. RUN NEW WIRING TO RELAYS IN CHILLER PANELS.
3. AIRFLOW SHOWN AT EMERGENCY EXHAUST STAGE 2 FLOW FOR EF-310.
4. SPACE TEMPERATURE SENSOR TO BE INCORPORATED INTO BAS.
5. NEW MOTORIZED ACTUATORS.

KEY PLAN:

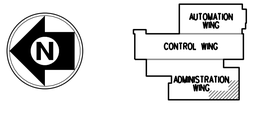

REV	APPROVED DATE	DESCRIPTION	JCN	REDLINE DATE	APVD

DEPARTMENT OF TRANSPORTATION
FEDERAL AVIATION ADMINISTRATION
ATO - TECHNICAL OPERATIONS — WESTERN SERVICE AREA

ARTCC
MAJOR MECHANICAL MODERNIZATION
BASEMENT CHILLER ROOM B115
VENTIALTION PLAN

DENVER — LONGMONT — CO

REVIEWED BY

SUBMITTED BY: PAUL TULENKO — PROJECT ENGINEER

APPROVED BY: CALLEN R. COLLINS — MGR: ENGINEERING - SEATTLE

DO NOT SIGN

DESIGNED: TU
DRAWN: JA
CHECKED

ISSUED BY: ENGINEERING SERVICES ENROUTE/FSS

DATE
JCN: 1401893
DRAWING NO: ZDV-1401893-M205
REV

ISSUED FOR:

DRAWING PRODUCED ON WSA MICROSTATION SYSTEM

EDMS: zdv-1401893-m205.dgn

zdv-1401893-m205.dgn 7/10/2018 5:14:50 PM John CTR Allen

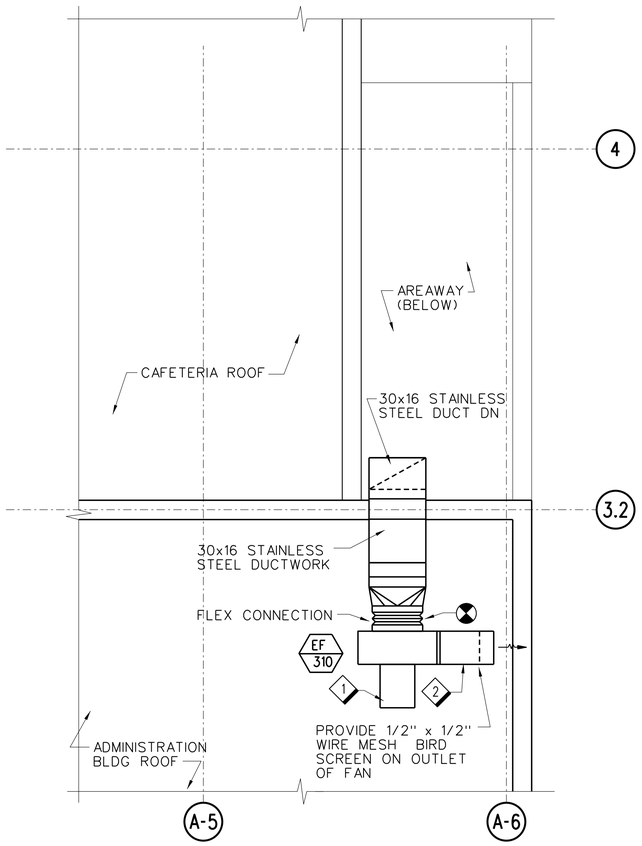

C8 M206 PARTIAL ROOF PLAN
SCALE: 1/4" = 1'-0"

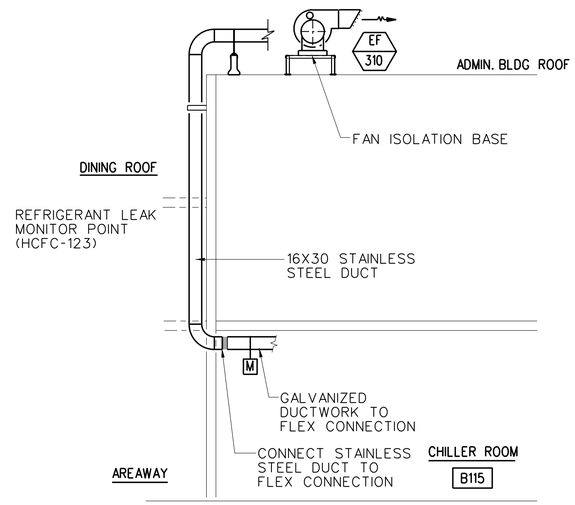

C5 M206 SECTION - ROOF EXHAUST FAN DUCTING
SCALE: 1/4" = 1'-0"

4' 0 4' 8'
SCALE: 1/4" = 1'-0"

GENERAL NOTES:

A. REFER TO SHEET M001 FOR GENERAL MECHANICAL NOTES.

SHEET NOTES:

1. NEW EXHAUST FAN EF-310. CONNECT TO EXISTING DUCTWORK WITH NEW FLEXIBLE DUCT.
2. NEW DISCHARGE FITTING BY FAN MANUFACTURER.

KEY PLAN:

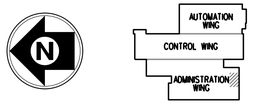

REV	APPROVED DATE	DESCRIPTION	JCN	REDLINE DATE	APVD

DEPARTMENT OF TRANSPORTATION
FEDERAL AVIATION ADMINISTRATION
ATO - TECHNICAL OPERATIONS WESTERN SERVICE AREA

ARTCC

MAJOR MECHANICAL MODERNIZATION BASEMENT CHILLER ROOM B115 VENTILATION DETAILS

DENVER LONGMONT CO

REVIEWED BY

SUBMITTED BY: PAUL TULENKO — PROJECT ENGINEER

APPROVED BY: CALLEN R. COLLINS — MGR: ENGINEERING - SEATTLE

DO NOT SIGN

DESIGNED: TU
DRAWN: JA
CHECKED:

ISSUED BY: ENGINEERING SERVICES ENROUTE/FSS

DATE:
JCN: 1401893
DRAWING NO: ZDV-1401893-M206
REV:

ISSUED FOR:

DGN: zdv-1401893-m206.dgn

rdn-1401893-m206.dgn
6/27/2018 10:40:50 AM John CTR Allen

DRAWING PRODUCED ON WSA MICROSTATION SYSTEM

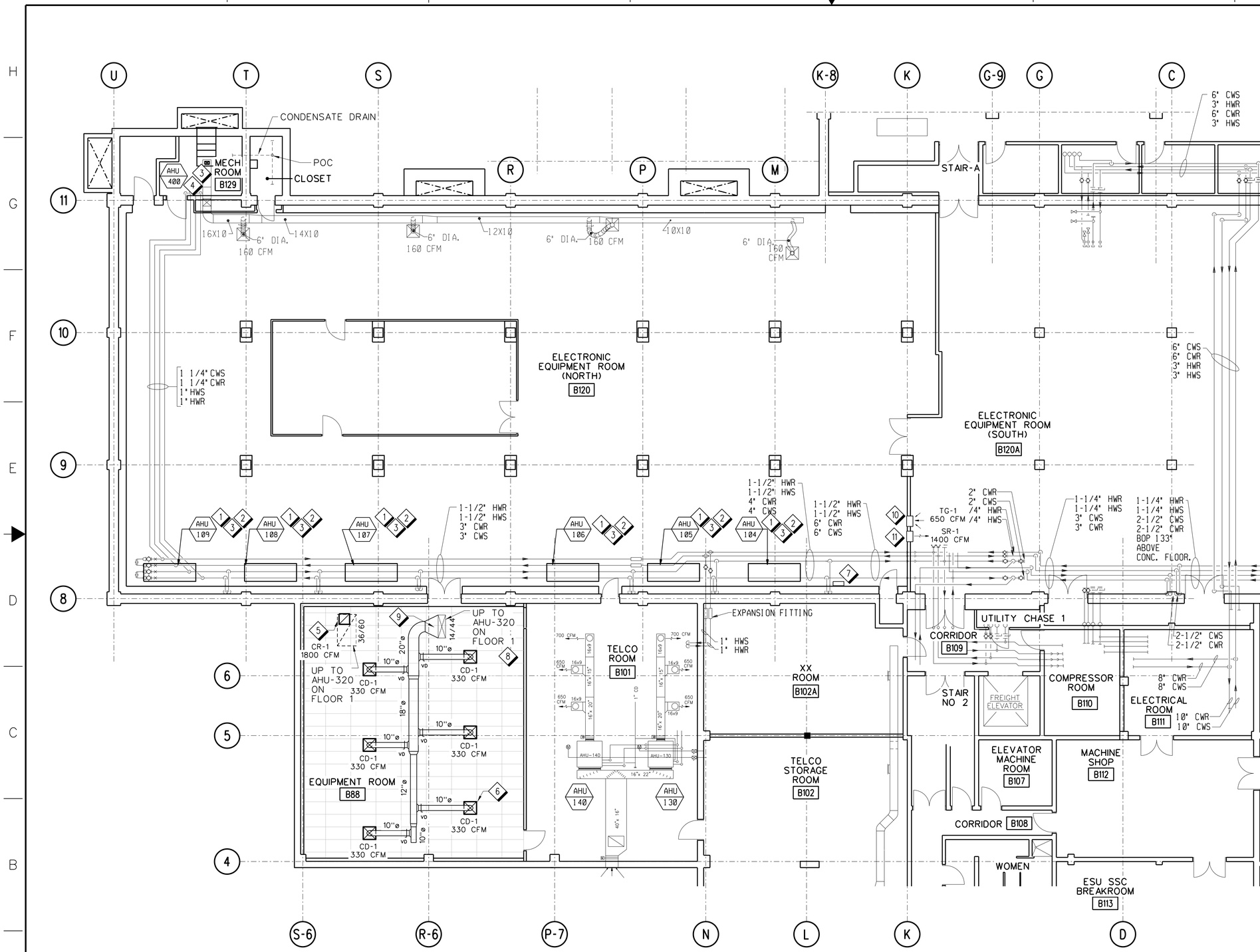

A8 / M211 BASEMENT ROOM B88/B101/B120/B129 HVAC EQUIPMENT AND PIPING PLAN
SCALE: 1/8" = 1'-0"

GENERAL NOTES:

A. REFER TO SHEET M001 FOR GENERAL MECHANICAL NOTES.

B. DURING REPLACEMENT OF AIR HANDLING UNITS, ONLY ONE UNIT SHALL BE OUT OF OPERATION AT ANY GIVEN TIME. TAB AND START-UP REPORTS SHALL BE SUBMITTED AND APPROVED FOR EACH AHU PRIOR TO WORKING ON THE NEXT UNIT. THE CONTRACTOR SHALL SUBMIT TO THE COR FOR APPROVAL THEIR PLAN/ROUTE TO MOVE THE NEW AHU'S FROM THE STAGING AREA TO THEIR FINAL LOCATION.

C. ENSURE CONSTRUCTION MEETS STRUCTURAL AND SEISMIC SPECIFICATIONS.

SHEET NOTES:

1. PROVIDE AHU AND INSULATE PIPING FROM EXISTING BRANCH ISOLATION VALVES TO AHU IN ACCORDANCE WITH THE MECHANICAL SPECIFICATIONS. SEE DETAIL E8/M501 FOR PIPING CONNECTION DETAILS. FOR ALL CRAC UNITS, THE CONTRACTOR SHALL VERIFY THAT THE PIPE ENTRANCE LOCATIONS SHALL MATCH THOSE OF THE EXISTING UNITS TO BE REPLACED.
2. ADJUST AND REINFORCE RAISED FLOOR SYSTEM (TILE, STRINGERS, GRID, ETC.) AS REQUIRED TO INSTALL NEW AHU'S. AHU INSTALLATION SHALL BE IN ACCORDANCE WITH THE MECHANICAL SPECIFICATIONS.
3. COORDINATE EXACT LOCATION OF TEMPERATURE AND HUMIDITY SENSORS WITH COR.
4. PROVIDE MODULAR AHU, INCLUDING FLOOR STAND, VIBRATION ISOLATORS, ACTUATORS, VALVES, SUMP PUMP AND HUMIDIFIER FOR AHU-400. PROVIDE PIPING FROM ISOLATION VALVES IN ACCORDANCE WITH DETAILS A8/M501 AND A5/M501. INCORPORATE WITH SCHNEIDER CONTROLS DDC. USE EXISTING CONDUIT AND CONDUCTOR IF ADEQUATE FOR TYING IN POINTS TO THE SCHNEIDER DDC.
5. PROVIDE RETURN GRILLE AND DUCTWORK IN CEILING GRID.
6. PROVIDE SUPPLY DIFFUSERS AND DUCTWORK IN CEILING GRID.
7. PROVIDE BACNET DDC PANEL FOR MONITORING POINTS AND CONTROL IN B120 AND COMMUNICATIONS WITH COMPUTER ROOM AIR HANDLING UNITS AND AHU-400.
8. BALANCE AHU-320 FOR ROOM B88 REQUIREMENTS.
9. REDUCE 14"x44" SUPPLY FROM AHU-320 TO 12"x26" AND MAKE APPROPRIATE TRANSITIONS TO 20"ø DUCT.
10. PROVIDE OPENING IN WALL AND INSTALL TRANSFER GRILLE. CONFIRM WALL LOCATION WITH COR.
11. PROVIDE OPENING IN WALL AND INSTALL SIDEWALL REGISTER. CONFIRM WALL LOCATION WITH COR.

KEY PLAN:

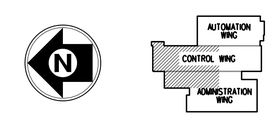

REV	APPROVED DATE	DESCRIPTION	JCN	REDLINE DATE	APVD

DEPARTMENT OF TRANSPORTATION
FEDERAL AVIATION ADMINISTRATION
ATO - TECHNICAL OPERATIONS — WESTERN SERVICE AREA

ARTCC

MAJOR MECHANICAL MODERNIZATION BASEMENT ROOMS B88/B101/B120/B129 HVAC EQUIPMENT AND PIPING PLAN

DENVER — LONGMONT — CO

REVIEWED BY

SUBMITTED BY: PAUL TULENKO — PROJECT ENGINEER

APPROVED BY: CALLEN R. COLLINS — MGR: ENGINEERING - SEATTLE

DO NOT SIGN

DESIGNED: DH
DRAWN: JA
CHECKED

ISSUED BY: ENGINEERING SERVICES ENROUTE/FSS

DATE
JCN: 1401893
DRAWING NO: ZDV-1401893-M211
REV

ISSUED FOR:

EDMS: zdv-1401893-m211.dgn

rsh-1401893-m211.dgn 7/12/2018 10:32:18 AM John (CTR) Allen

DRAWING PRODUCED ON WSA MICROSTATION SYSTEM

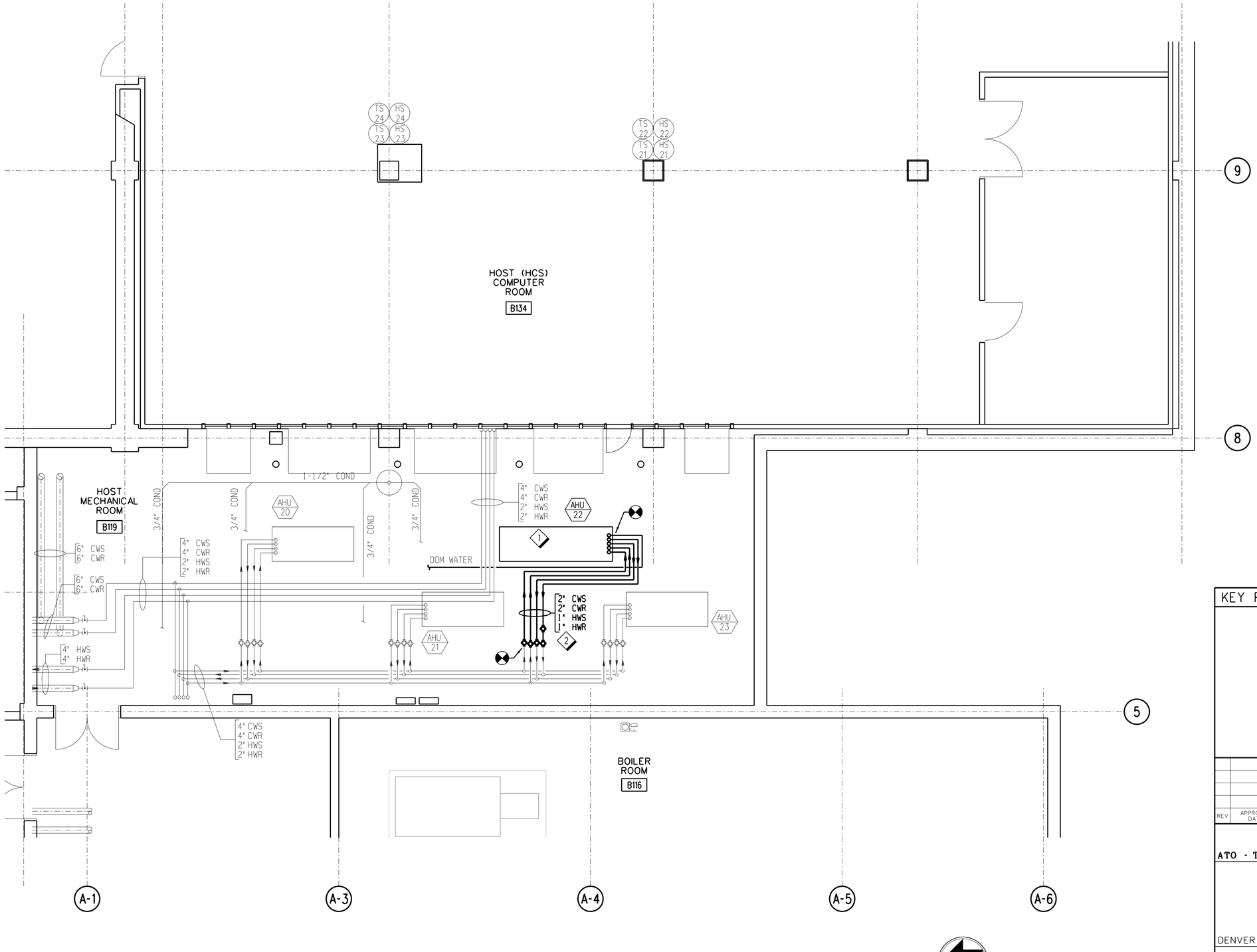

A8 / M212 BASEMENT ROOM B119 HVAC EQUIPMENT AND PIPING PLAN

SCALE: 1/4" = 1'-0"

4' 0 4' 8'

SCALE: 1/4" = 1'-0"

GENERAL NOTES:

A. REFER TO SHEET M001 FOR GENERAL MECHANICAL NOTES.

B. DURING REPLACEMENT OF AIR HANDLING UNIT, ONLY ONE UNIT SHALL BE OUT OF OPERATION AT ANY GIVEN TIME.

SHEET NOTES:

1. ADJUST AND REINFORCE RAISED FLOOR SYSTEM (TILE, STRINGERS, GRID, ETC.) AS REQUIRED TO INSTALL NEW AHU. AHU INSTALLATION SHALL BE IN ACCORDANCE WITH THE MECHANICAL SPECIFICATIONS.

2. INSTALL AND INSULATE NEW PIPING FROM EXISTING BRANCH ISOLATION VALVES TO AHU IN ACCORDANCE WITH THE MECHANICAL SPECIFICATIONS. PROVIDE AND INSTALL AN ADDITIONAL BALL VALVE IN THE CWR LINE. RETAIN AND RETURN EXISTING CWR VALVE TO AN OPEN POSITION. REPLACE ISOLATION VALVES ON THE HWS AND HWR LINES WITH BALL VALVES. SEE DETAIL E8/M501 FOR COIL CONNECTION DETAILS. FOR ALL NEW CRAC UNITS, THE CONTRACTOR SHALL VERIFY THAT THE PIPE ENTRANCE LOCATIONS SHALL MATCH THOSE OF THE EXISTING UNITS TO BE REPLACED.

KEY PLAN:

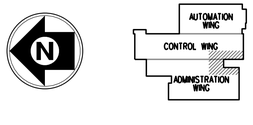

REV	APPROVED DATE	DESCRIPTION	JCN	REDLINE DATE	APVD

DEPARTMENT OF TRANSPORTATION
FEDERAL AVIATION ADMINISTRATION
ATO - TECHNICAL OPERATIONS WESTERN SERVICE AREA

ARTCC

MAJOR MECHANICAL MODERNIZATION
BASEMENT ROOM B119
HVAC EQUIPMENT AND PIPING PLAN

DENVER LONGMONT CO

REVIEWED BY	SUBMITTED BY: PAUL TULENKO (DO NOT SIGN)	APPROVED BY: CALLEN R. COLLINS (DO NOT SIGN)
	PROJECT ENGINEER	MGR: ENGINEERING - SEATTLE
	DESIGNED DH	ISSUED BY: ENGINEERING SERVICES ENROUTE/FSS
	DRAWN JA	DATE / JCN 1401893
	CHECKED	DRAWING NO: ZDV-1401893-M212 REV

ISSUED FOR:

DRAWING PRODUCED ON WSA MICROSTATION SYSTEM

rdp-1401893-m212.dgn 7/22/2018 4:14:30 PM John CTR Allen

EDM: zdv-1401893-m212.dgn

GENERAL NOTES:

A. REFER TO SHEET M001 FOR GENERAL MECHANICAL NOTES.

B. PUMP FOUNDATION BOLTS AND NUTS TO BE STAINLESS STEEL.

SHEET NOTES:

1. ANCHOR OF COOLING TOWERS TO EXISTING STRUCTURAL BEAMS SHALL COVER MANUFACTURER RECOMENDATIONS AND SHALL MEET ALL REQUIREMENTS OF IBC FOR SEISMIC REINFORCEMENT.
2. CONTRACTOR SHALL DETERMINE FINAL LAYOUT AND MAKE PLACEMENT OF COOLING TOWERS OVER EXISTING SUPPORTS ACCORDINGLY.
3. STAINLESS STEEL BASIN SCREEN TO FIT EXISTING BRACKETS ANCHORED IN CONCRETE WALL. BASIN SCREENS ARE TO BE REMOVABLE FOR MAINTENANCE AND CLEANING.

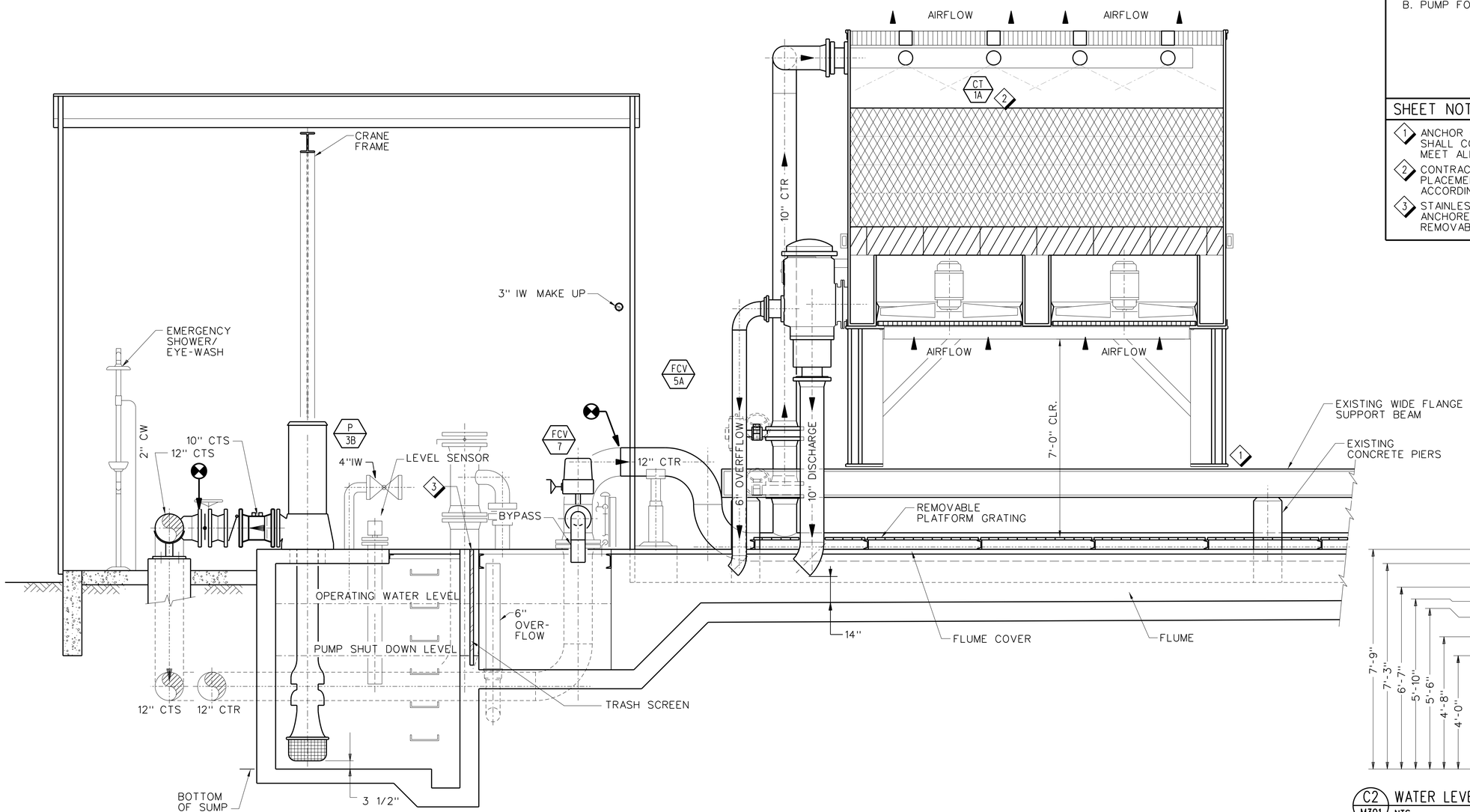

C7 / M301 PUMP HOUSE AND COOLING TOWER SECTION

SCALE: 1/2" = 1'-0"

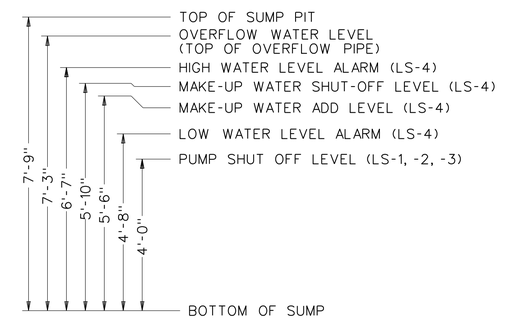

C2 / M301 WATER LEVELS FOR SETTING LEVEL SWITCHES

NTS

REV	APPROVED DATE	DESCRIPTION	JCN	REDLINE DATE	APVD

DEPARTMENT OF TRANSPORTATION
FEDERAL AVIATION ADMINISTRATION
ATO - TECHNICAL OPERATIONS — WESTERN SERVICE AREA

ARTCC

MAJOR MECHANICAL MODERNIZATION
COOLING TOWER AND PUMP HOUSE
PIPING SECTIONS AND DETAILS

DENVER — LONGMONT — CO

REVIEWED BY

SUBMITTED BY: PAUL TULENKO — PROJECT ENGINEER

APPROVED BY: CALLEN R. COLLINS — MGR: ENGINEERING - SEATTLE

DO NOT SIGN

DESIGNED: TU
DRAWN: JA
CHECKED

ISSUED BY: ENGINEERING SERVICES ENROUTE/FSS

DATE
JCN: 1401893
DRAWING NO: ZDV-1401893-M301
REV

ISSUED FOR:

zdv-1401893-m301.dgn 6/27/2018 10:43:40 AM John CTR Allen

EDM: zdv-1401893-m301.dgn

DRAWING PRODUCED ON WSA MICROSTATION SYSTEM

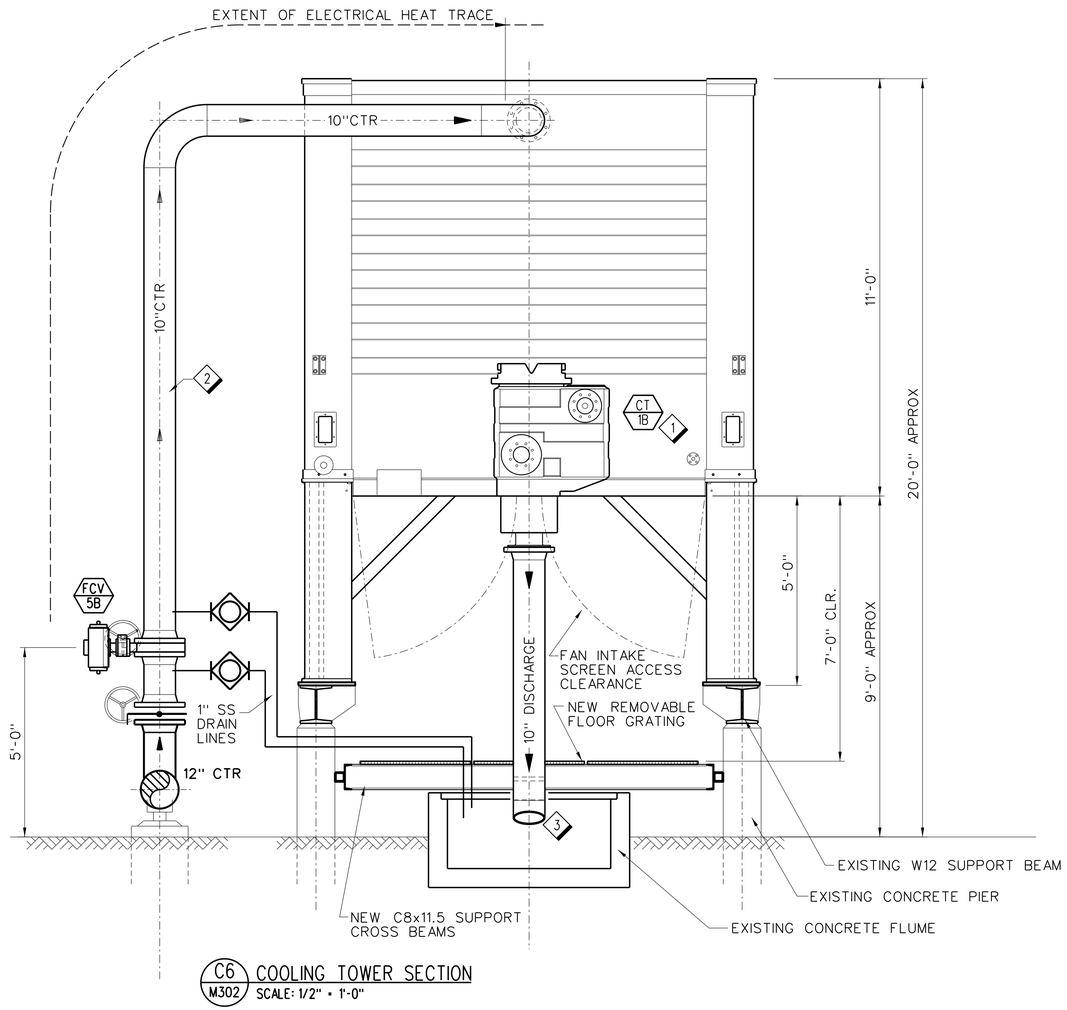

C6 / M302 COOLING TOWER SECTION
SCALE: 1/2" = 1'-0"

1' 0 1' 2' 5'
SCALE: 1/2" = 1'-0"

GENERAL NOTES:

A. REFER TO SHEET M001 FOR GENERAL MECHANICAL NOTES.

B. CONTRACTOR SHALL ENGAGE WITH MANUFACTURER OF COOLING TOWERS TO ENSURE INLET, OUTLET AND ACCESS HATCH ALL ARE AS SHOWN ON PLAN SHEET M204.

SHEET NOTES:

1. NEW COOLING TOWER. CONNECTION TO COOLING TOWER INLET AND OUTLET SHALL BE AS SHOWN ON PLAN AND IN ELEVATIONS ON THIS SHEET AND ON SHEET M301.
2. STAINLESS STEEL PIPING ABOVE FLOW CONTROL VALVE.
3. 10" FLANGED SS PIPE FROM COOLING TOWER OUTLET. TERMINATE IN FLUME AS SHOWN ON THIS SHEET AND ON SHEET M301.

REV	APPROVED DATE	DESCRIPTION	JCN	REDLINE DATE	APVD

DEPARTMENT OF TRANSPORTATION
FEDERAL AVIATION ADMINISTRATION
ATO - TECHNICAL OPERATIONS WESTERN SERVICE AREA

ARTCC

MAJOR MECHANICAL MODERNIZATION
COOLING TOWER AND PUMP HOUSE
COOLING TOWER SECTION

DENVER LONGMONT CO

REVIEWED BY

SUBMITTED BY: DO NOT SIGN — PAUL TULENKO — PROJECT ENGINEER

APPROVED BY: DO NOT SIGN — CALLEN R. COLLINS — MGR: ENGINEERING - SEATTLE

DESIGNED TU
DRAWN JA
CHECKED

ISSUED BY: ENGINEERING SERVICES ENROUTE/FSS

DATE
JCN 1401893
DRAWING NO ZDV-1401893-M302
REV

ISSUED FOR:

DRAWING PRODUCED ON WSA MICROSTATION SYSTEM

rdn-1401893-m302.dgn 6/27/2018 10:44:33 AM John CTR Allen

EDM: zdv-1401893-m302.dgn

GENERAL NOTES:

A. REFER TO SHEET M001 FOR GENERAL MECHANICAL NOTES.

B. ALL STEEL BRACKETS, BOLTS, NUTS, PLATES AND STRUCTURAL ITEMS TO BE STAINLESS STEEL EXCEPT FOR LARGE STEEL BEAMS AND SUPPORTS WHICH WOULD BE GALVANIZED.

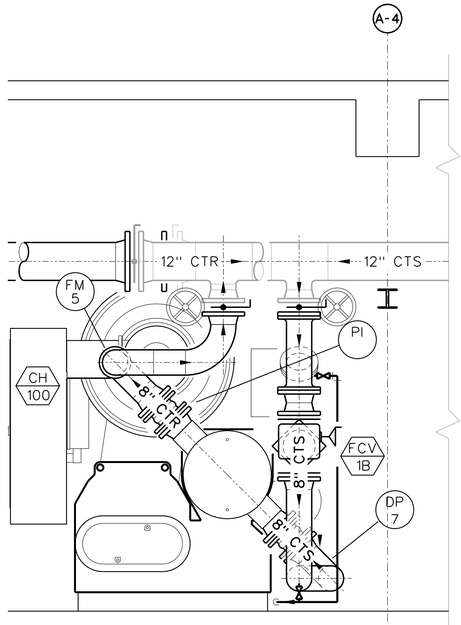

E8 M303 CHILLER DETAIL (CONDENSER END)
SCALE: 1/2" = 1'-0"

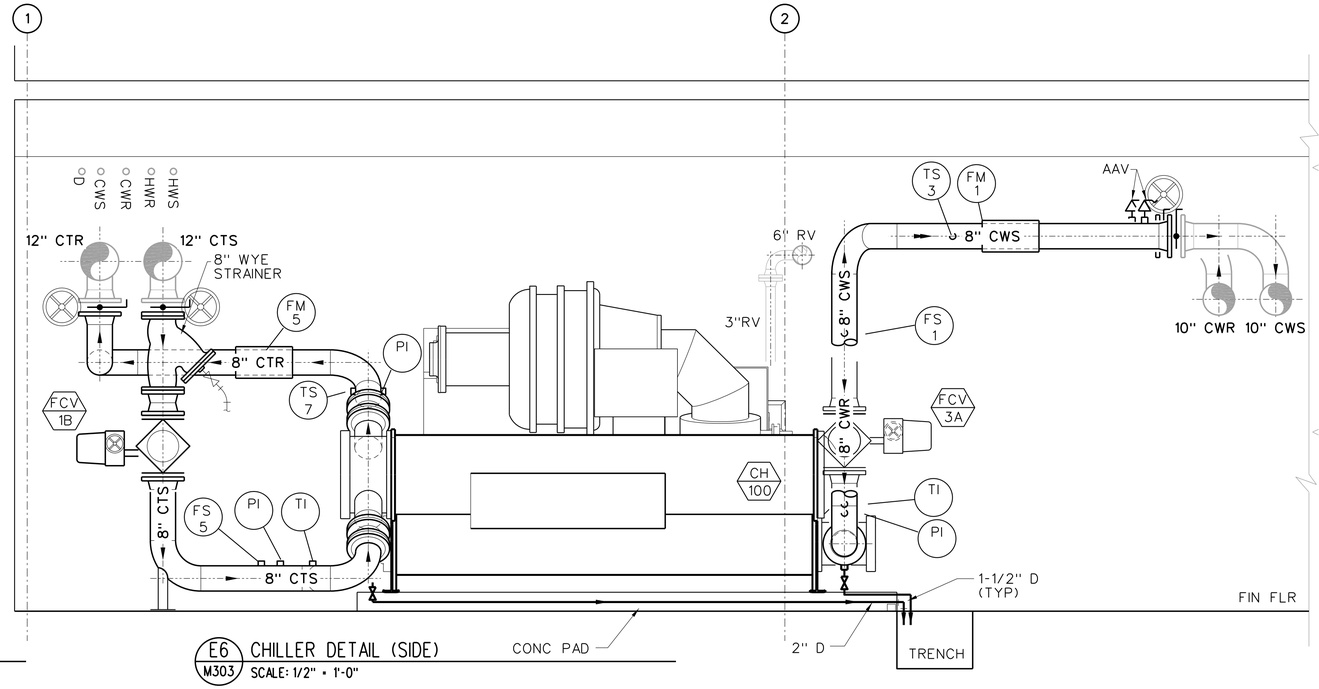

E6 M303 CHILLER DETAIL (SIDE)
SCALE: 1/2" = 1'-0"

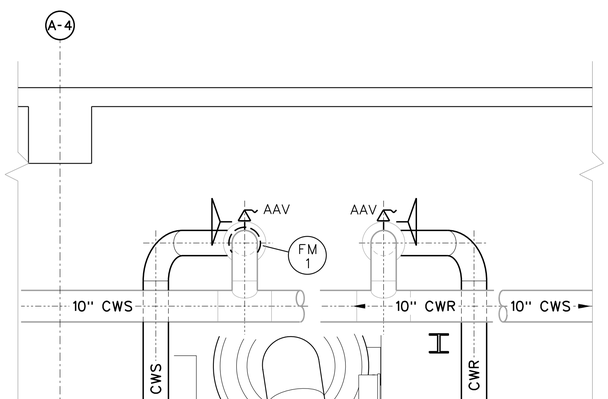

A8 M303 CHILLER DETAIL (EVAPORATOR END)
SCALE: 1/2" = 1'-0"

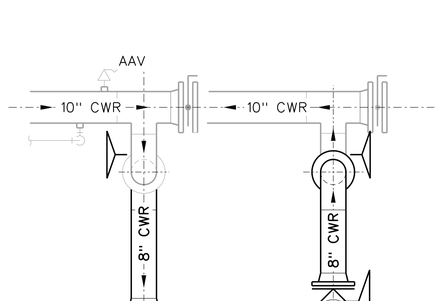

A6 M303 PUMP DETAIL
SCALE: 1/2" = 1'-0"

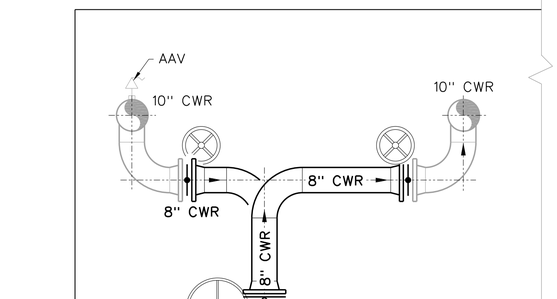

A4 M303 PUMP DETAIL
SCALE: 1/2" = 1'-0"

1' 0 1' 2' 5'
SCALE: 1/2" = 1'-0"

REV	APPROVED DATE	DESCRIPTION	JCN	REDLINE DATE	APVD

DEPARTMENT OF TRANSPORTATION
FEDERAL AVIATION ADMINISTRATION
ATO - TECHNICAL OPERATIONS WESTERN SERVICE AREA

ARTCC
MAJOR MECHANICAL MODERNIZATION

CHILLER ROOM PIPING DETAILS

DENVER LONGMONT CO

REVIEWED BY
SUBMITTED BY: PAUL TULENKO
PROJECT ENGINEER
APPROVED BY: CALLEN R. COLLINS
MGR: ENGINEERING - SEATTLE

DO NOT SIGN

DESIGNED TU
DRAWN JA
CHECKED
ISSUED BY ENGINEERING SERVICES ENROUTE/FSS
DATE
JCN 1401893
DRAWING NO ZDV-1401893-M303
REV

ISSUED FOR:

DRAWING PRODUCED ON WSA MICROSTATION SYSTEM

rdn-1401893-m303.dgn 6/27/2018 10:45:12 AM John CTR Allen
EDM: zdv-1401893-m303.dgn

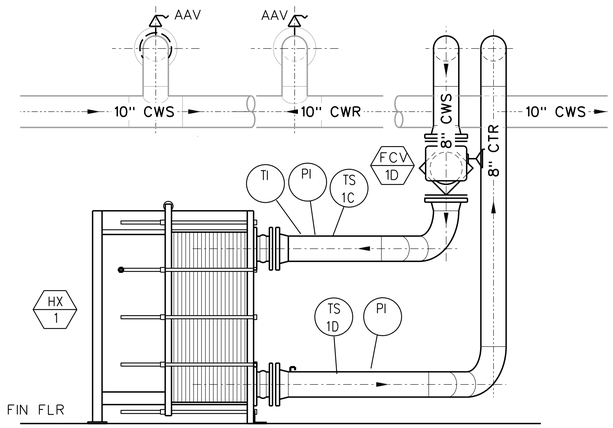

E8 M304 HEAT EXCHANGER DETAIL (CONDENSER PIPING)
SCALE: 1/2" = 1'-0"

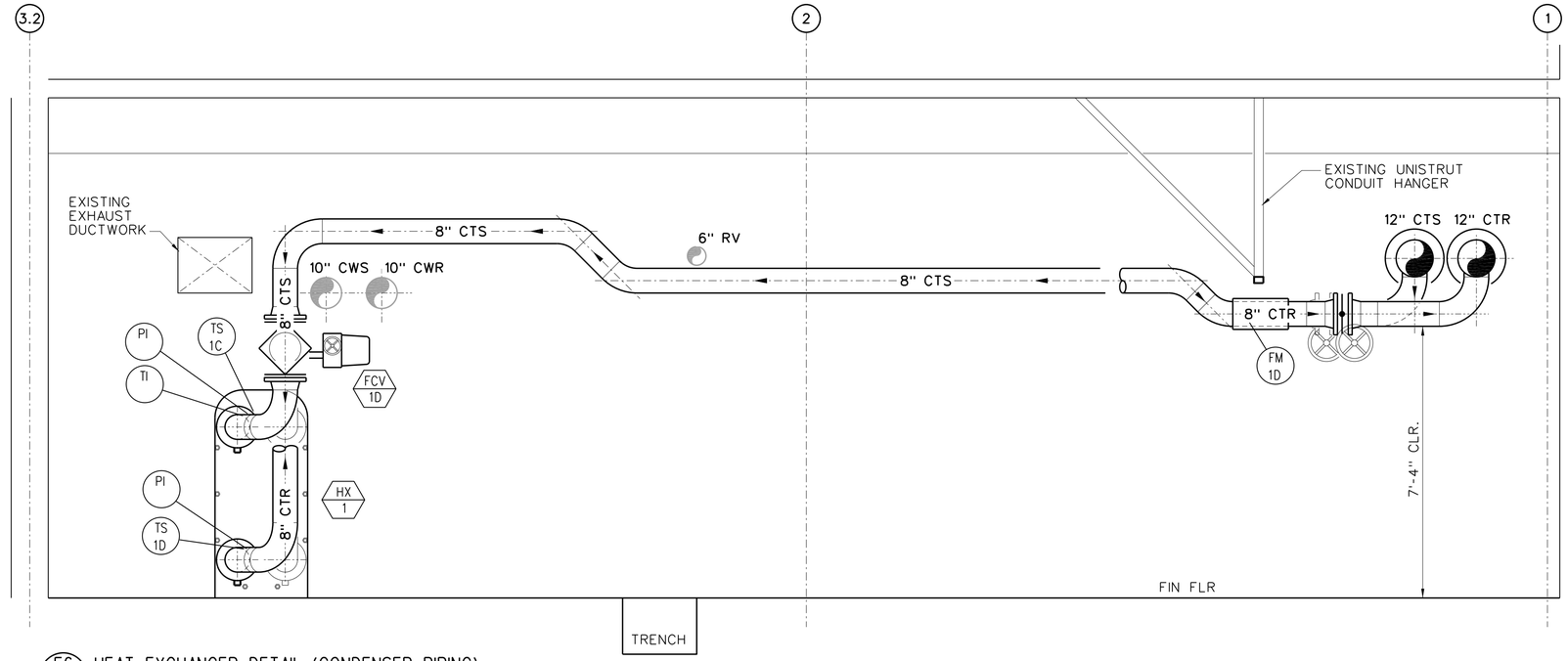

E6 M304 HEAT EXCHANGER DETAIL (CONDENSER PIPING)
SCALE: 1/2" = 1'-0"

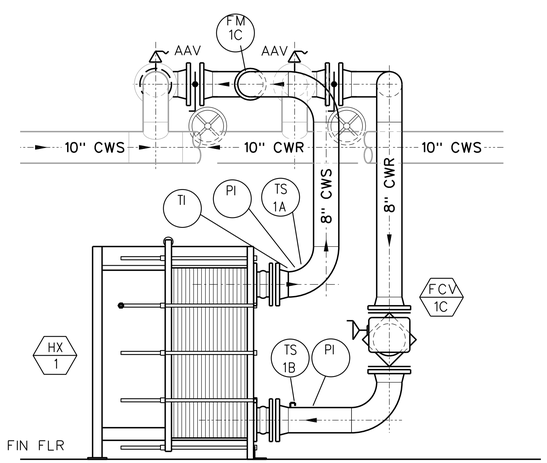

A8 M304 HEAT EXCHANGER DETAIL (CHILLED WATER PIPING)
SCALE: 1/2" = 1'-0"

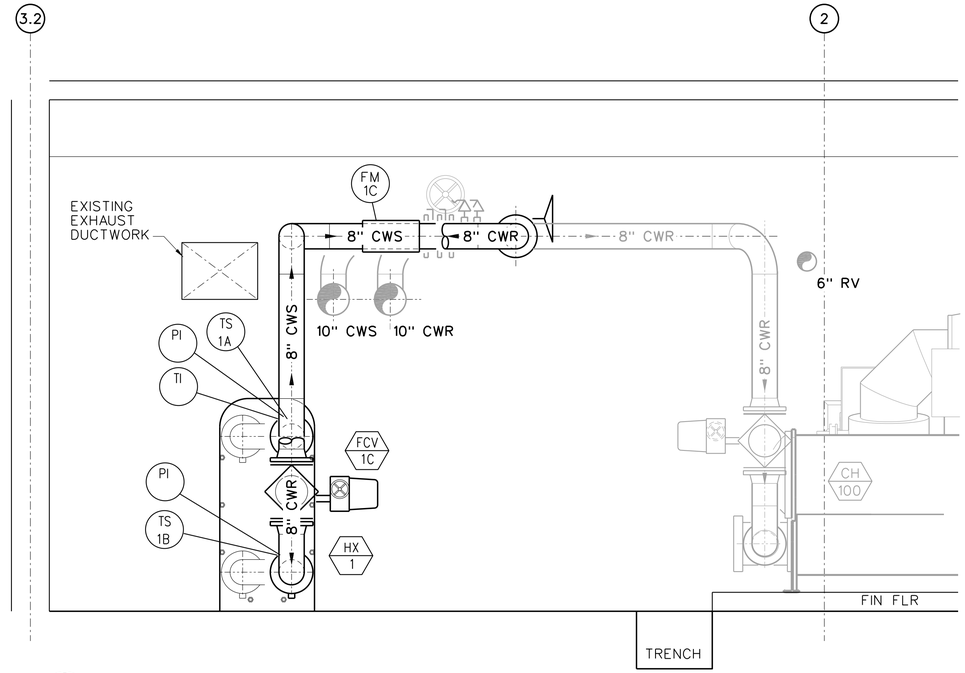

A6 M304 HEAT EXCHANGER DETAIL (CHILLED WATER PIPING)
SCALE: 1/2" = 1'-0"

1' 0 1' 2' 5'
SCALE: 1/2" = 1'-0"

GENERAL NOTES:

A. REFER TO SHEET M001 FOR GENERAL MECHANICAL NOTES.

B. ALL STEEL BRACKETS, BOLTS, NUTS, PLATES AND STRUCTURAL ITEMS TO BE STAINLESS STEEL EXCEPT FOR LARGE STEEL BEAMS AND SUPPORTS WHICH WOULD BE GALVANIZED.

REV	APPROVED DATE	DESCRIPTION	JCN	REDLINE DATE	APVD

DEPARTMENT OF TRANSPORTATION
FEDERAL AVIATION ADMINISTRATION
ATO - TECHNICAL OPERATIONS WESTERN SERVICE AREA

ARTCC
MAJOR MECHANICAL MODERNIZATION

FLAT PLATE HEAT EXCHANGER PIPING DETAILS

DENVER LONGMONT CO

REVIEWED BY
SUBMITTED BY: PAUL TULENKO — PROJECT ENGINEER
APPROVED BY: CALLEN R. COLLINS — MGR: ENGINEERING - SEATTLE
DO NOT SIGN

DESIGNED TU
DRAWN JA
CHECKED
ISSUED BY: ENGINEERING SERVICES ENROUTE/FSS
DATE
JCN 1401893
DRAWING NO ZDV-1401893-M304
REV

ISSUED FOR:

rdp-1401893-m304.dgn 6/27/2018 10:46:05 AM John CTR Allen

DGN: zdv-1401893-m304.dgn

DRAWING PRODUCED ON WSA MICROSTATION SYSTEM

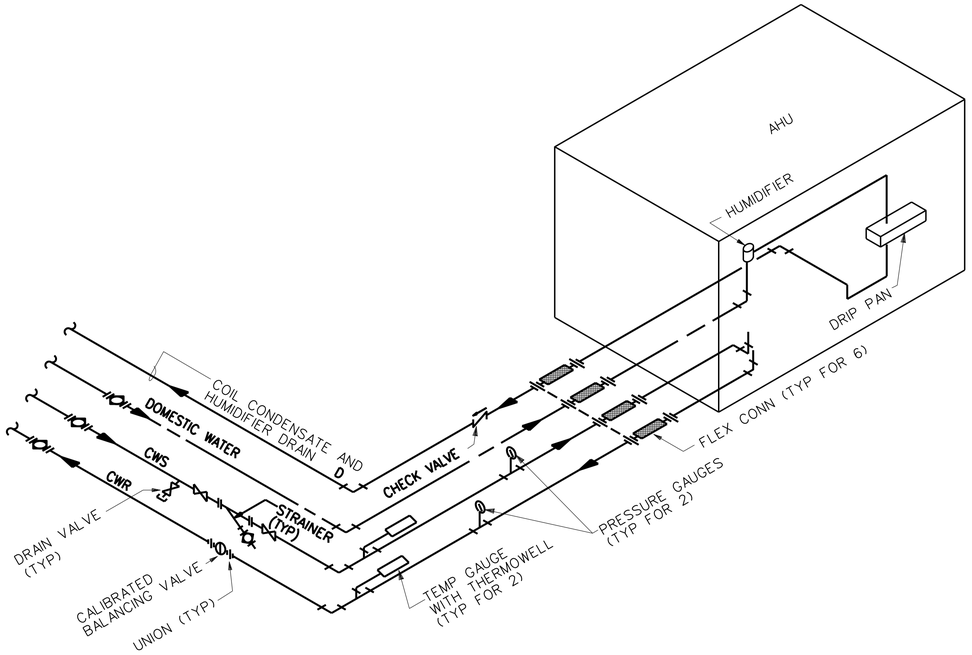

E8 M501 COMPUTER ROOM AIR HANDLING UNIT PIPING DETAIL
SCALE: NTS AHU-22, AHU-104 THRU AHU-109

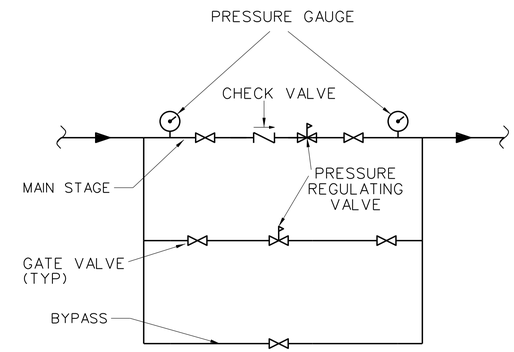

F5 M501 TWO-STAGE REDUCING PRESSURE STATION DETAIL
SCALE: NTS

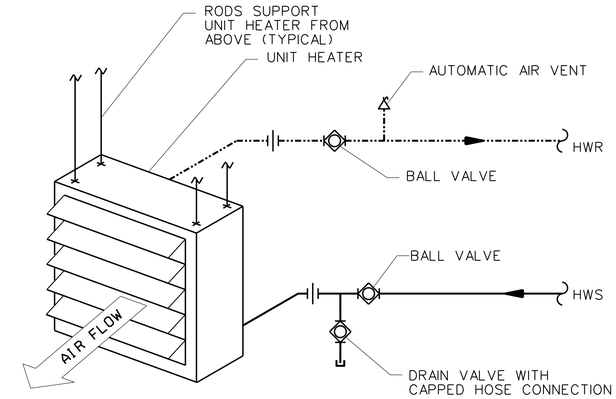

F2 M501 HOT WATER UNIT HEATER PIPING DETAIL
SCALE: NTS UH-315

NOTES FOR DETAILS A8 AND A5:

1. PIPE FITTINGS 2" AND SMALLER SHALL BE THREADED FITTINGS.
2. ARRANGE PIPING TO ALLOW FOR COIL ACCESSIBILITY AND REMOVAL. DO NOT LOCATE PIPING OR ACCESSORIES IN COIL PULL SPACE EXCEPT AS SHOWN IN DETAIL.

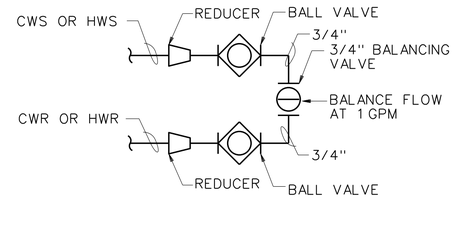

C4 M501 CHILLED WATER AND HOT WATER BYPASS DETAIL
SCALE: NTS

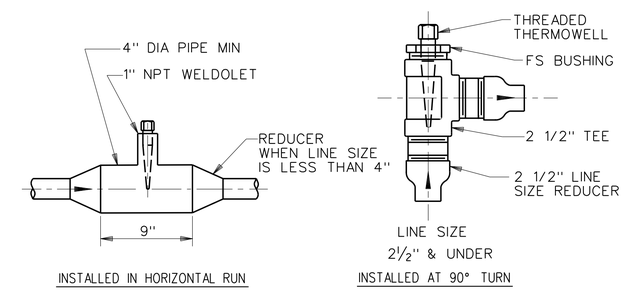

C2 M501 THERMOWELL INSTALLATION DETAIL
SCALE: NTS

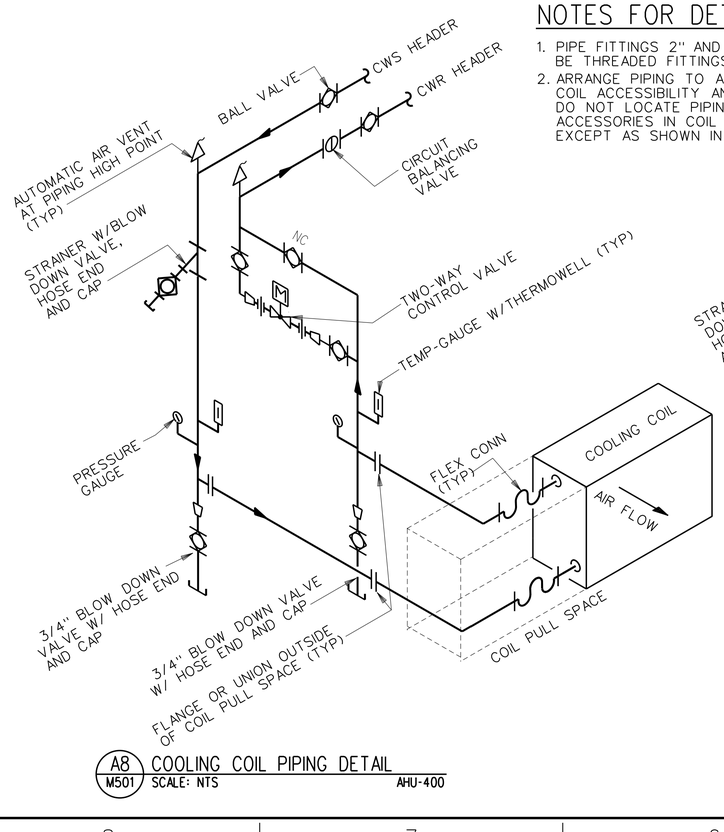

A8 M501 COOLING COIL PIPING DETAIL
SCALE: NTS AHU-400

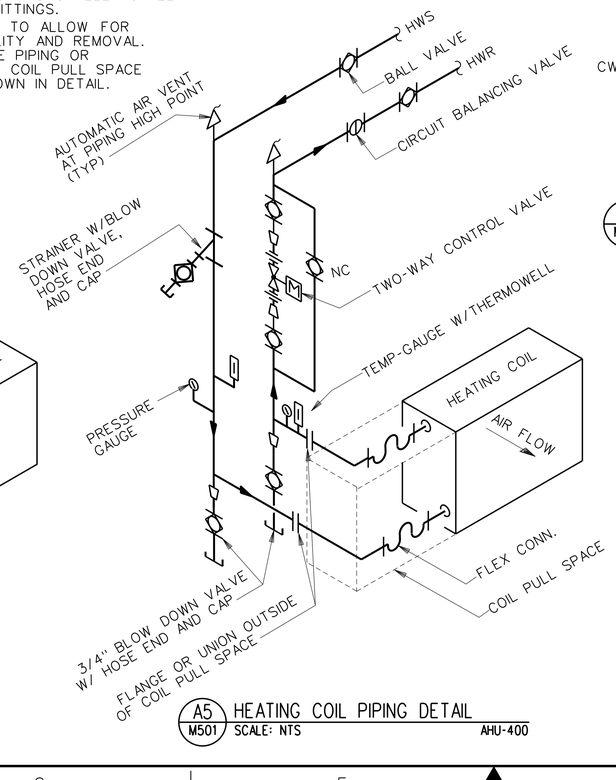

A5 M501 HEATING COIL PIPING DETAIL
SCALE: NTS AHU-400

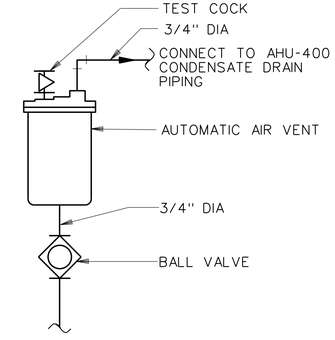

A4 M501 AUTOMATIC AIR VENT DETAIL
SCALE: NTS

REV	APPROVED DATE	DESCRIPTION	JCN	REDLINE DATE	APVD

DEPARTMENT OF TRANSPORTATION
FEDERAL AVIATION ADMINISTRATION
ATO - TECHNICAL OPERATIONS WESTERN SERVICE AREA

ARTCC
MAJOR MECHANICAL MODERNIZATION

HVAC TYPICAL DETAILS

DENVER LONGMONT CO

REVIEWED BY
SUBMITTED BY: PAUL TULENKO — PROJECT ENGINEER
APPROVED BY: CALLEN R. COLLINS — MGR: ENGINEERING - SEATTLE
DO NOT SIGN

DESIGNED TU
DRAWN JA
CHECKED
ISSUED BY ENGINEERING SERVICES ENROUTE/FSS
DATE
JCN 1401893
DRAWING NO ZDV-1401893-M501
REV

ISSUED FOR:

DRAWING PRODUCED ON WSA MICROSTATION SYSTEM

zdv-1401893-m501.dgn 6/27/2018 10:46:45 AM John CTR Allen

EDM: zdv-1401893-m501.dgn

SCHEDULE FOR BRACING PIPES ON TRAPEZE

PIPE SIZE	MAX DEAD LOAD ON TRAPEZE (LBS)	BOLTS TO ANGLE	VERTICAL TRANSVERSE & LONGITUDINAL ANGLES	MAXIMUM TRAPEZE SPAN	TRAPEZE SIZE (DOUBLE STRUT CHANNEL)	TOP CONNECTION OF DIAGONAL & LONGITUDINAL ANGLE	ROD SIZE	MAX LENGTH FOR RODS
2-1/2	320	3/8" DIA	2"x2"x16 GA (1/4" CABLE)	3'-4"	1-5/8" x3-1/4" x12 GA	TYPE A	1/2" DIA	25"
3	440	3/8" DIA	2"x2"x16 GA (1/4" CABLE)	3'-4"	1-5/8" x3-1/4" x12 GA	TYPE B	1/2" DIA	25"
4	660	3/8" DIA	2"x2"x16 GA (1/4" CABLE)	4'-0"	1-5/8" x3-1/4" x12 GA	TYPE A	5/8" DIA	31"
5	940	3/8" DIA	2"x2"x16 GA (1/4" CABLE)	4'-0"	1-5/8" x3-1/4" x12 GA	TYPE B	3/4" DIA	37"
6	945	3/8" DIA	2"x2"x16 GA (1/4" CABLE)	3'-10"	1-5/8" x3-1/4" x12 GA	TYPE B	3/4" DIA	37"
8	1010	1/2" DIA	2"x2"x16 GA (1/4" CABLE)	3'-6"	1-5/8" x3-1/4" x12 GA	TYPE C	3/4" DIA	37"

1. THIS SCHEDULE IS BASED ON FOUR EQUAL SIZED PIPE ARRANGEMENT FOR PIPE 5" AND SMALLER. THE SCHEDULE ALSO LIMITS THE NUMBER OF 6" PIPES TO THREE, AND 8" PIPES TO TWO. HOWEVER, ANY COMBINATION OF PIPES CAN BE USED IF THE TOTAL COMBINED WEIGHT OF THE PIPES ON A TRAPEZE IS EQUAL TO OR LESS THAN THE "MAX DEAD LOAD" NOTED AND THAT THE MAXIMUM TRAPEZE SPAN AND SIZE AT DIAGONAL BRACES NOTE IN THE SCHEDULE ARE MAINTAINED.
2. SEE SCHEDULE FOR TYPICAL CONNECTION TO STRUCTURAL SUPPORTING MEMBERS THIS DRAWING.
3. PLACE STANDARD CUT WASHERS BETWEEN SHEET METAL ANGLE AND NUT.
4. PROVIDE TRANSVERSE AND LONGITUDINAL BRACES FOR TRAPEZE SUPPORTS AS FOLLOWS:

PIPE SIZE	DIAGONAL (TRANSVERSE) BRACE SPACING	LONGITUDINAL BRACE SPACING
3-1/2" & SMALLER	40'-0" OC MAXIMUM	40'-0" OC MAXIMUM
4" THRU 6"	20'-0" OC MAXIMUM	20'-0" OC MAXIMUM

INSTALL ONE TRANSVERSE BRACE AND ONE LONGITUDINAL BRACE AT EACH END OF THE TRAPEZE.

SCHEDULE FOR BRACING PIPES

PIPE SIZE	BOLTS TO L'S (B)	VERTICAL L'S (C)	TRANSVERSE L'S	LONGITUDINAL L'S	MAX. SPACING (FT) TRANSV.	MAX. SPACING (FT) LONGIT.	TOP CONNECTION OF DIAGONAL & LONGITUDINAL L'S (A)	ROD SIZE	MAX LENGTH FOR RODS
2-1/2	3/8" DIA	2x2x16 GA	2-1/2x2-1/2x16 GA (1/4" CABLE)	2-1/2x2-1/2x16 GA (1/4" CABLE)	40	40	TYPE A	1/2" DIA	25"
3	3/8" DIA	2x2x16 GA	2-1/2x2-1/2x16 GA (1/4" CABLE)	2-1/2x2-1/2x16 GA (1/4" CABLE)	40	40	TYPE B	1/2" DIA	25"
4	3/8" DIA	2x2x16 GA	2-1/2x2-1/2x16 GA (1/4" CABLE)	2-1/2x2-1/2x16 GA (1/4" CABLE)	40	40	TYPE C	5/8" DIA	31"
5	3/8" DIA	2x2x16 GA	2-1/2x2-1/2x16 GA (1/4" CABLE)	2-1/2x2-1/2x12 GA (1/4" CABLE)	40	40	TYPE D	5/8" DIA	31"
6	1/2" DIA	2x2x16 GA	2-1/2x2-1/2x16 GA (1/4" CABLE)	2-1/2x2-1/2x12 GA (1/4" CABLE)	40	40	TYPE E	3/4" DIA	37"
8	1/2" DIA	2x2x16 GA	2-1/2x2-1/2x16 GA (1/4" CABLE)	2-1/2x2-1/2x12 GA (1/4" CABLE)	40	40	TYPE F	7/8" DIA	43"

(A) SEE "SCHEDULE FOR TYP CONNECTIONS TO STRUCTURAL SUPPORTING MEMBERS" THIS SHEET
(B) PLACE STANDARD CUT WASHERS BETWEEN SHEET METAL L'S AND NUT
(C) "VERTICAL ANGLE" IN THE SCHEDULE IS REQUIRED IN ADDITION THE HANGER ROD ONLY WHEN "MAXIMUM LENGTH FOR RODS" IS EXCEEDED

SCHEDULE FOR TYP CONNECTIONS TO STRUCTURAL SUPPORTING MEMBERS

TYPE	MAX LOAD CAPACITY POUNDS	EXPANSION ANCHORS TO CONC (SIZE&QTY) LT WT	EXPANSION ANCHORS TO CONC (SIZE&QTY) HARD ROCK	BOLT SIZE AT STEEL CLAMP	SPREADER SIZE	SIZE OF ANGLE TO SUPPORTING STRUCTURAL MEMBER	HANGER ROD SIZE
A	1040	5/8"	1/2"	3/8"	C4x5.4	L3-1/2x2-1/2x3/8x0'-3" LLH	1/2" DIA
B	1415	1/2"x2	3/8"x2	3/8"	C4x5.4	L5x3x3/8x0'-3" LLH	1/2" DIA
C	1586	5/8"x2	1/2"x2	1/2"	C5x6.7	2-L4x3x3/8x0'-4" LLH	5/8" DIA
D	2020	3/4"x2	5/8"x2	1/2"	C6x8.5	2-L5x3x3/8x0'-4" LLH	5/8" DIA
E	2870	7/8"x2	3/4"x2	5/8"	C8x11.5	2-L6x3-1/2x3/8x0'-4" LLH	3/4" DIA
F	4600	3/4"x4	5/8"x4	3/4"	C9x13.4	2-L5x3x3/8x0'-10" LLH	7/8" DIA
G	7040	7/8"x4	3/4"x4	7/8"	C10x15.3	2-L6x3-1/2x1/2x0'-11 1/2"LLH	7/8" DIA

NOTE: THE DIAMETERS OF EXPANSION ANCHORS ARE INDICATED IN THIS SCHEDULE. ANCHOR LENGTH SHALL BE DETERMINED FROM MANUFACTURER'S RECOMMENDATIONS ON ANCHOR CAPACITY.

GENERAL NOTES FOR BRACING PIPES

1. BRACE PIPING 2-1/2" NOMINAL DIAMETER AND LARGER. EXCEPTIONS:
   A. SEISMIC BRACES MAY BE OMITTED WHEN THE TOP OF THE PIPE IS SUSPENDED 12" OR LESS FROM THE SUPPORTING STRUCTURAL MEMBER AND THE PIPE IS SUSPENDED BY AN INDIVIDUAL HANGER.
2. DETAILS SHOWN PROVIDE A LATERAL BRACING SYSTEM. A TYPICAL VERTICAL SUPPORT SYSTEM CONFORMING TO THE FOLLOWING REQUIREMENTS MUST ALSO BE USED.
   A. HORIZONTAL PIPING :
      (1) SUPPORTS - HORIZONTAL PIPING SHALL BE SUPPORTED AT SUFFICIENTLY CLOSE INTERVALS TO KEEP IT IN ALIGNMENT AND PREVENT SAGGING.
      (2) SCREWED PIPE - (I.P.S.) OR FLANGED PIPE SHALL BE SUPPORTED AT APPROXIMATELY 10 FOOT INTERVALS.
      (3) COPPER TUBING - SHALL BE SUPPORTED AT APPROXIMATELY 6 FOOT INTERVALS FOR TUBING 1 1/2" AND SMALLER. 10 FOOT INTERVALS FOR TUBING 2" AND LARGER.
      (4) PIPING OF OTHER SPECIFIED MATERIALS SHALL BE SUPPORTED IN ACCORDANCE WITH THEIR APPROVED INSTALLATION STANDARDS.
3. DIAGONAL (TRANSVERSE) BRACINGS SHALL BE AT 40'-0" OC MAXIMUM UNLESS OTHERWISE NOTED.
4. DIAGONAL (TRANSVERSE) BRACING FOR ONE PIPE SECTION MAY ALSO ACT AS LONGITUDINAL BRACING FOR THE PIPE SECTION CONNECTED PERPENDICULAR TO IT, IF THE BRACING IS INSTALLED WITHIN 24" OF THE ELBOW OR TEE OF SIMILAR SIZE.
5. LONGITUDINAL BRACINGS SHALL BE AT 40'-0" OC MAXIMUM UNLESS OTHERWISE NOTED. WHEN THERMAL EXPANSION OR CONTRACTION IS INVOLVED, PROVIDE LONGITUDINAL BRACINGS AT ANCHOR POINTS. THE LONGITUDINAL BRACES AND THE CONNECTIONS MUST BE CAPABLE OF RESISTING THE FORCE DUE TO EXPANSION AND CONTRACTION.
6. FOR THREADED PIPING THE FLEXIBILITY MAY BE PROVIDED BY THE INSTALLATION OF SWING JOINTS. IN WELDED OR SOLDER JOINT PIPING THE FLEXIBILITY SHALL BE PROVIDED BY EXPANSION LOOPS OR MANUFACTURED FLEXIBLE CONNECTORS.
7. DO NOT USE BRANCH LINES TO BRACE MAIN LINES.
8. TRAPEZE HANGERS MAY BE USED. PROVIDE FLEXIBILITY IN JOINTS WHERE PIPES PASS THROUGH BUILDING SEISMIC OR EXPANSION JOINTS, OR WHERE RIGIDLY SUPPORTED PIPES CONNECT TO EQUIPMENT WITH VIBRATION ISOLATORS.
9. PIPING SHALL NOT BE BRACED TO DISSIMILAR PARTS OF A BUILDING, OR TWO BUILDING SYSTEMS THAT MAY RESPOND IN A DIFFERENT MODE DURING AN SEISMIC EVENT. EXAMPLES: WALL AND CEILING; SOLID CONCRETE WALL AND A METAL DECK WITH LIGHTWEIGHT CONCRETE FILL.
10. FOR PIPE SLEEVES THROUGH WALLS AND FLOORS, MINIMUM CLEARANCE ON ALL SIDES SHALL NOT BE LESS THAN 1 INCH FOR PIPE SIZES UP TO 3-1/2" IN DIAMETER AND LARGER. NO CLEARANCE IS NECESSARY FOR PIPING PASSING THROUGH GYPSUM BOARD OR EQUALLY FRANGIBLE CONSTRUCTION THAT IS NOT REQUIRED TO HAVE A FIRE RESISTANCE RATING.
11. AT VERTICAL PIPE RISERS, WHEREVER POSSIBLE, SUPPORT THE WEIGHT OF THE RISER AT A POINT OR POINTS ABOVE THE CENTER OF GRAVITY OF THE RISER. PROVIDE LATERAL GUIDES AT THE TOP AND BOTTOM OF THE RISER, AND AT INTERMEDIATE POINTS NOT TO EXCEED 30'-0" ON CENTER.
12. CAST IRON PIPE, GLASS PIPE AND OTHER PIPES JOINED WITH A SHIELD AND CLAMP ASSEMBLY WHERE THE TOP OF THE PIPE IS 12" OR MORE FROM SUPPORTING STRUCTURE SHALL BE BRACED ON EACH SIDE OF A CHANGE IN DIRECTION OF 90° OR MORE. RISER JOINTS SHALL BE BRACED OR STABILIZED BETWEEN FLOORS.
13. DETAILS AND SCHEDULES ON THIS SHEET DEPICT BOTH STEEL ANGLE TYPE AND CABLE TYPE BRACING. PROPRIETARY BRACING SYSTEMS APPROVED BY THE COR MAY BE USED IN PLACE OF THE BRACES SHOWN IN THESE DETAILS AND SCHEDULES.
14. BRACING AND CONNECTION SCHEDULES AND DETAILS ARE FOR REFERENCE ONLY. SHOP DRAWINGS AND DESIGN CALCULATIONS SATISFYING THE REQUIREMENTS OF THE SPECIFICATION SHALL BE SUBMITTED.

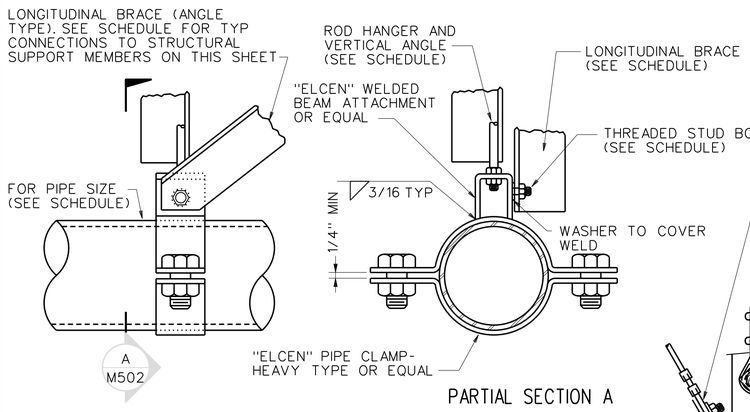

D8 / M502 TYPICAL LONGITUDINAL PIPE BRACING DETAIL
SCALE: NTS

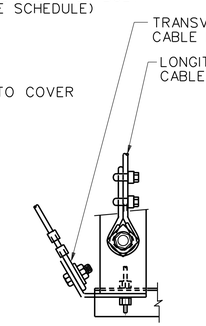

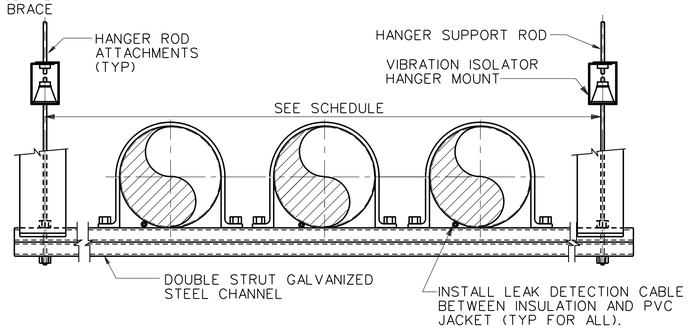

C5 / M502 TRAPEZE TYPE PIPE HANGER DETAIL W/ BRACING
SCALE: NTS

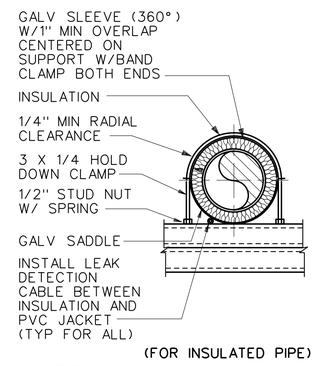

C3 / M502 PIPE CLAMP ASSEMBLY
SCALE: NTS

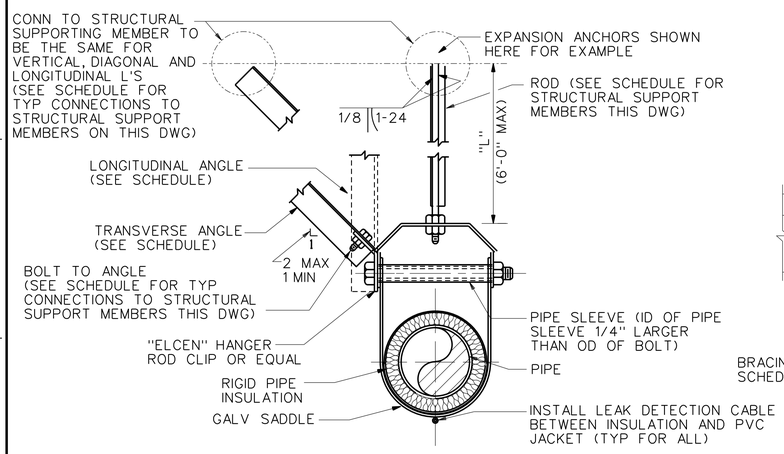

A8 / M502 TYPICAL TRANSVERSE PIPE BRACING DETAIL
SCALE: NTS

NOTE: MATCH HANGER SUPPORT TO OD OF INSULATION FOR INSULATED LINE.

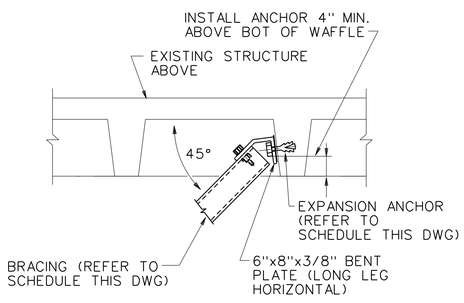

A6 / M502 TYPICAL SEISMIC DETAIL FOR SWAY BRACING ANCHORAGE
SCALE: NTS

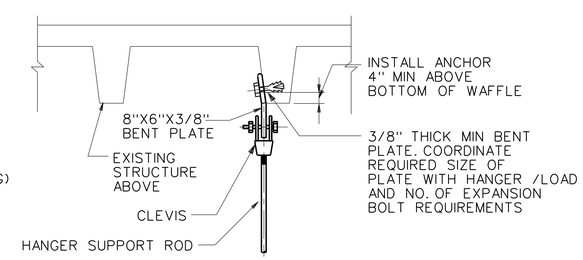

A4 / M502 HANGER ROD ATTACHMENT DETAIL
SCALE: NTS

REV	APPROVED DATE	DESCRIPTION	JCN	REDLINE DATE	APVD

DEPARTMENT OF TRANSPORTATION
FEDERAL AVIATION ADMINISTRATION
ATO - TECHNICAL OPERATIONS WESTERN SERVICE AREA

ARTCC
MAJOR MECHANICAL MODERNIZATION
HVAC SEISMIC DETAILS

DENVER LONGMONT CO

REVIEWED BY
SUBMITTED BY: PAUL TULENKO — PROJECT ENGINEER
APPROVED BY: CALLEN R. COLLINS — MGR: ENGINEERING - SEATTLE
DESIGNED TU
DRAWN JA
CHECKED
ISSUED BY: ENGINEERING SERVICES ENROUTE/FSS
DATE
JCN 1401893
DRAWING NO ZDV-1401893-M502
REV

ISSUED FOR:

DRAWING PRODUCED ON WSA MICROSTATION SYSTEM

zdv-1401893-m502.dgn 6/27/2018 10:42:12 AM John CTR Allen

GENERAL NOTES:

A. REFER TO SHEET M001 FOR GENERAL MECHANICAL NOTES.

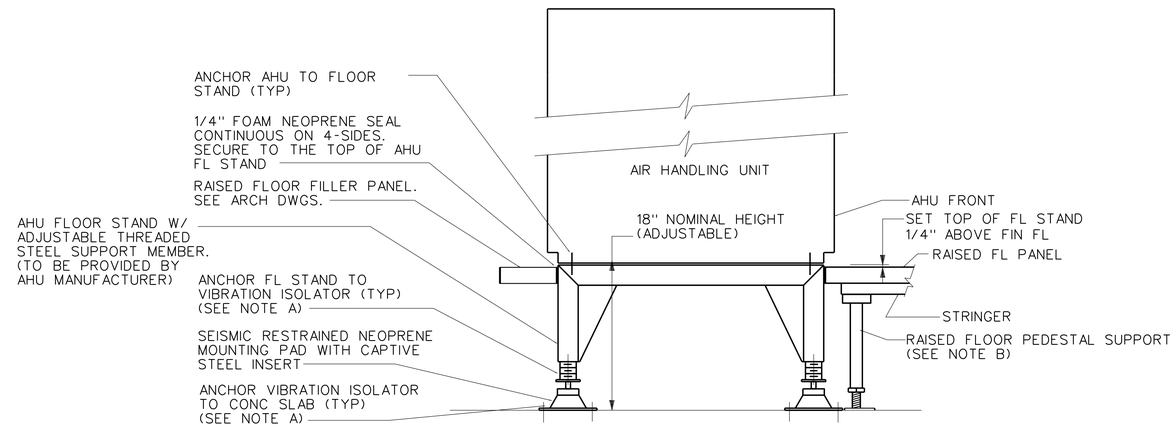

DETAIL NOTES:

A. ANCHOR BOLT SIZE AND QUANTITY SHALL BE IN ACCORDANCE WITH AHU MANUFACTURER.

B. COORDINATE RAISED FLOOR STANDS WITH INSTALLATION OF AIR HANDLING UNITS AND PIPES.

C. DISCHARGE AIR PLENUM AND DAMPER BELOW ACCESS FLOOR SHALL COVER THE FULL LENGTH AND WIDTH OF AHU. SEPARATE DISCHARGE PLENUMS AND DAMPERS FOR EACH FAN ARE NOT ACCEPTABLE.

D. FIELD VERIFY LOCATION OF EXISTING PIPING AND COORDINATE WITH MANUFACTURER OF AHU TO DETERMINE PIPING ENTRY POINTS AS IT SUITS THE FIELD CONDITIONS.

D3 / M511 TYPICAL PLENUM DETAIL
SCALE: NTS (TYPICAL AHU-104 THRU AHU-109)

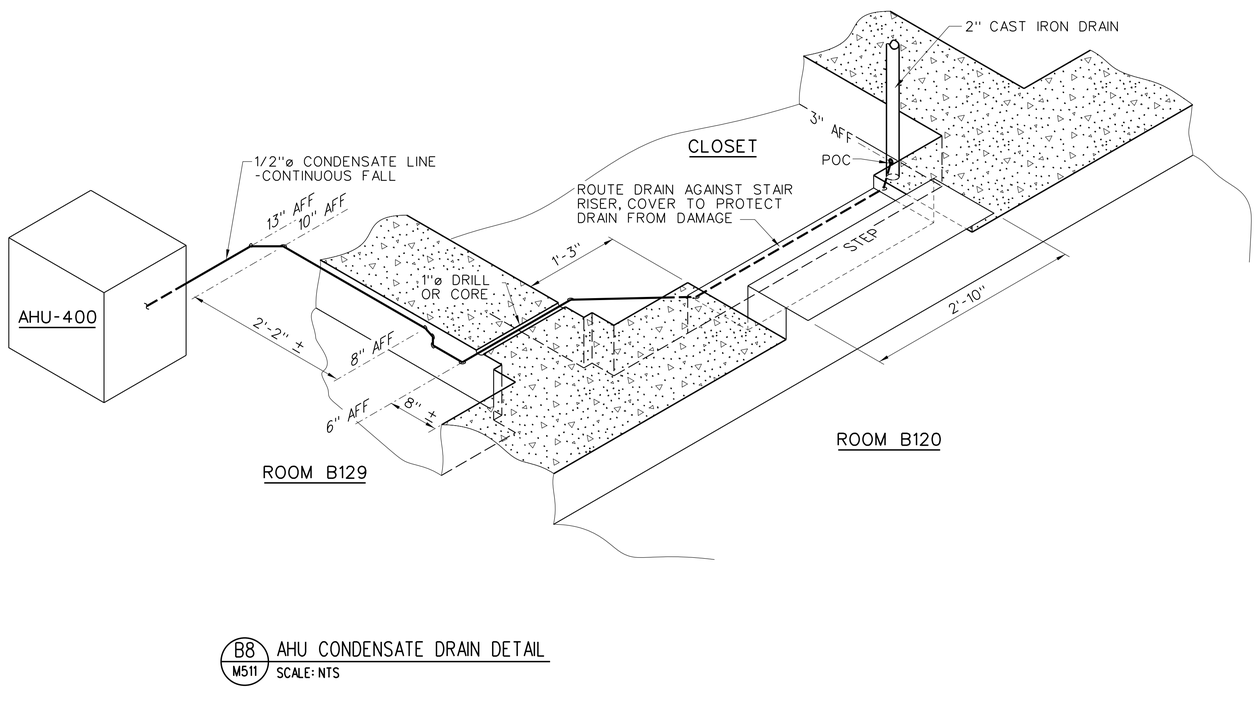

B8 / M511 AHU CONDENSATE DRAIN DETAIL
SCALE: NTS

REV	APPROVED DATE	DESCRIPTION	JCN	REDLINE DATE	APVD

DEPARTMENT OF TRANSPORTATION
FEDERAL AVIATION ADMINISTRATION
ATO - TECHNICAL OPERATIONS WESTERN SERVICE AREA

ARTCC
MAJOR MECHANICAL MODERNIZATION
HVAC SECTIONS AND TYPICAL DETAILS

DENVER LONGMONT CO

REVIEWED BY
SUBMITTED BY: PAUL TULENKO — PROJECT ENGINEER
APPROVED BY: CALLEN R. COLLINS — MGR: ENGINEERING - SEATTLE
DESIGNED DH
DRAWN JA
CHECKED
ISSUED BY: ENGINEERING SERVICES ENROUTE/FSS
DATE
JCN 1401893
DRAWING NO ZDV-1401893-M511
REV

DO NOT SIGN

ISSUED FOR:

zdv-1401893-m511.dgn 6/27/2018 10:47:55 AM John CTR Allen

EDM: zdv-1401893-m511.dgn

DRAWING PRODUCED ON WSA MICROSTATION SYSTEM

CHILLER SCHEDULE - CENTRIFUGAL TYPE

UNIT NO.	LOCATION	RATED CAPACITY (TONS)	FULL LOAD EFFICIENCY(KW/TON)	PART LOAD EFFICIENCY/ IPLV (KW/TON)	REFRIDGERANT		EVAPORATOR DATA								CONDENSER DATA								COMPRESSOR DATA		COMPRESSOR MOTOR CONTROLLER		CHILLER ELECTRICAL REQUIREMENTS							MAXIMUM WEIGHT (LBS)	KNOWN ACCEPTABLE SOURCE		COMMENTS
					TYPE	QTY (LBS.)	PRESS RATING (PSIG)	NO. OF PASS.	FLUID TYPE	FLOW RATE (GPM)	EWT (°F)	LWT (°F)	MAX PD (FT.)	FOULING FACTOR	PRESS RATING (PSIG)	NO. OF PASS.	FLUID TYPE	FLOW RATE (GPM)	EWT (°F)	LWT (°F)	MAX PD (FT.)	FOULING FACTOR	NO. OF COMP.	FULL LOAD AMPS (FLA)	TYPE	MOUNT	POWER CONN.	POWER INPUT (KW)	MIN. CIRCUIT AMPACITY (A)	MAX OCP (A)	ELECTRICAL CHAR. V	PH	HZ		MFGR	MODEL	
CH-100	B115	320	0.567	0.3291	R-123	600	150	2	WATER	764	55.0	45.0	15.5	0.0001	150	2	WATER	904	75.0	85	18.3	0.00025	1	265	VAR SPEED	UNIT	FIELD	185.9	314	500	460	3	60	19,019	TRANE	CVHE	NOTES 1, 2
CH-200	B115	320	0.567	0.3291	R-123	600	150	2	WATER	764	55.0	45.0	15.5	0.0001	150	2	WATER	904	75.0	85	18.3	0.00025	1	265	VAR SPEED	UNIT	FIELD	185.9	314	500	460	3	60	19,019	TRANE	CVHE	NOTES 1, 2

NOTES:
1. UNIT MUST MEET FEMP EFFICIENCY REQUIREMENTS
2. MARINE WATER BOX

FLOW CONTROL VALVE SCHEDULE

UNIT NO.	LOCATION	SERVICE	DESIGN PIPE SIZE (IN.)	VALVE DATA					ACTUATOR DATA					COMMENTS
				DESIGN FLOW (GPM)	FLOW COEFFICIENT (Cv)	TYPE	KNOWN SOURCE MFGR	KNOWN SOURCE MODEL/ SERIES	VOLTS	PH	CONTROL SIGNAL	KNOWN SOURCE MFGR	KNOWN SOURCE MODEL/ SERIES	
FCV-1A	B115	CH-100	8	764	3316	BUTTERFLY	BRAY	NYL2	120	3	2-10 VDC	BRAY	S70	
FCV-2A	B115	CH-200	8	764	3316	BUTTERFLY	BRAY	NYL2	120	3	2-10 VDC	BRAY	S70	
FCV-3A	B115	CH-300	8	764	3316	BUTTERFLY	BRAY	NYL2	120	3	2-10 VDC	BRAY	S70	
FCV-4A	B115	CH-400	8	764	3316	BUTTERFLY	BRAY	NYL2	120	3	2-10 VDC	BRAY	S70	
FCV-1B	B115	CH-100	8	904	3316	BUTTERFLY	BRAY	NYL2	120	3	2-10 VDC	BRAY	S70	
FCV-2B	B115	CH-200	8	904	3316	BUTTERFLY	BRAY	NYL2	120	3	2-10 VDC	BRAY	S70	
FCV-3B	B115	CH-300	8	904	3316	BUTTERFLY	BRAY	NYL2	120	3	2-10 VDC	BRAY	S70	
FCV-4B	B115	CH-400	8	904	3316	BUTTERFLY	BRAY	NYL2	120	3	2-10 VDC	BRAY	S70	
FCV-1C	B115	HX-1	8	764	3316	BUTTERFLY	BRAY	NYL2	120	3	2-10 VDC	BRAY	S70	
FCV-1D	B115	HX-1	8	904	3316	BUTTERFLY	BRAY	NYL2	120	3	2-10 VDC	BRAY	S70	
FCV-5A	COOLING TOWER YARD	CT-1A	10	904	5430	BUTTERFLY	BRAY	NYL2	120	3	2 POSITION	BRAY	S70	
FCV-5B	COOLING TOWER YARD	CT-1B	10	904	5430	BUTTERFLY	BRAY	NYL2	120	3	2 POSITION	BRAY	S70	
FCV-5C	COOLING TOWER YARD	CT-1C	10	904	5430	BUTTERFLY	BRAY	NYL2	120	3	2 POSITION	BRAY	S70	
FCV-6	B113A	CHILLED WATER BYPASS	6	764	3316	BUTTERFLY	BRAY	NYL2	120	3	2-10 VDC	BRAY	S70	
FCV-7	PUMP HOUSE	COOLING TOWER BYPASS	6	904	1850	BUTTERFLY	BRAY	NYL2	120	3	2-10 VDC	BRAY	S70	

NOTES:

PUMP SCHEDULE

UNIT NO.	LOCATION	SERVICE	GPM	TDH (FEET)	RPM	HP	ELECTRICAL DATA			KNOWN ACCEPTABLE SOURCE		COMMENTS
							VOLTS	PH	HZ	MFGR	MODEL/SERIES	
P-1A	B115	CHILLED WATER SYSTEM	1000	150	1780	60	480	3	60	BELL & GOSSET	HSC-S 6X8X12L	NOTE 1
P-1B	B115	CHILLED WATER SYSTEM	1000	150	1780	60	480	3	60	BELL & GOSSET	HSC-S 6X8X12L	NOTE 1
P-1C	B115	CHILLED WATER SYSTEM	1000	150	1780	60	480	3	60	BELL & GOSSET	HSC-S 6X8X12L	NOTE 1
P-1D	B115	CHILLED WATER SYSTEM	1000	150	1780	60	480	3	60	BELL & GOSSET	HSC-S 6X8X12L	NOTE 1
P-3A	PUMP HOUSE	CONDENSER WATER SYSTEM	1100	110	1770	40	460	3	60	BELL & GOSSET	VIT-DITM-12CMC	NOTE 1, 2
P-3B	PUMP HOUSE	CONDENSER WATER SYSTEM	1100	110	1770	40	460	3	60	BELL & GOSSET	VIT-DITM-12CMC	NOTE 1, 2
P-3C	PUMP HOUSE	CONDENSER WATER SYSTEM	1100	110	1770	40	460	3	60	BELL & GOSSET	VIT-DITM-12CMC	NOTE 1, 2

NOTES:
1. VARIABLE SPEED PUMP
2. 2-STAGE PUMP(TURBINES)

EXHAUST FAN SCHEDULE

UNIT NO.	LOCATION	SERVICE	CFM	PERFORMANCE DATA				MOTOR DATA			CONSTRUCTION DATA						KNOWN ACCEPTABLE		COMMENTS
				TSP (IN WG)	MAX OV (FPM)	MAX RPM	MAX BHP	HP	VOLTS	PH	TYPE FAN	CLASS	ROT.	DISCH.	ARRANG.	DRIVE	MFGR	MODEL/ SERIES	
EF-310	B116	CHILLER ROOM EXHAUST	1,500 4,000	0.5	1800	600	0.89	1	480	3	CENTRIFUGAL	-	CW	HORIZ.	-	BELT	GREEN HECK	SFB-30	NOTE 1, 2, 3
EF-101A	PUMP HOUSE	PUMP HOUSE EXHAUST	990 VARIABLE	-		1,700	-	1/3	115/230	1	INLINE	-	-	HORIZ.	-	DIRECT	CAN ARM	S12-EVD	
EF-101B	PUMP HOUSE	ELECTRICAL ADDITION	580 690	-		1,600	-	1/20	115	1	INLINE	-	-	HORIZ.	-	DIRECT	CAN ARM	S10-B2	NOTE 3
SF-101	PUMP HOUSE	PUMP HOUSE INTAKE	520	-		1725	-	1/4	115/230	1	INLINE	-	-	HORIZ.	-	DIRECT	AMERI CRAFT	CAF-912-1/4	

NOTE:
1. UNIT WITH MOTORIZED DAMPER.
2. UNIT WITH WIRE MESH SCREEN.
3. UNIT WITH 2-SPEED FAN

COOLING TOWER SCHEDULE

UNIT NO.	LOCATION	SERVICE	TYPE	RATED CAPACITY (TONS)	AIR EWB (°F)	CONDENSER WATER DATA				NO. OF CELLS	NO. OF FANS/ CELL	FAN AND MOTOR DATA				MAXIMUM WEIGHT (LBS.)	KNOWN ACCEPTABLE SOURCE		COMMENTS
						MAX GPM	EWT (°F)	LWT (°F)	STATIC LIFT (FT.)			SPEED CONTROL	ELECTRICAL DATA HP (EA.)	VOLT	PH		MFGR	MODEL/ SERIES	
CT-1A	COOLING TOWER YARD	CHILLERS	MECHANICAL DRAFT COUNTER FLOW	360	69.8	1,039	85.0	75.0	12.0	1	4	VARIABLE SPEED	7.5	460	3	14,394	TOWER TECH	TTXR-041975	NOTE 1, 2, 3
CT-1B	COOLING TOWER YARD	CHILLERS	MECHANICAL DRAFT COUNTER FLOW	360	69.8	1,039	85.0	75.0	12.0	1	4	VARIABLE SPEED	7.5	460	3	14,394	TOWER TECH	TTXR-041975	NOTE 1, 2, 3
CT-1C	COOLING TOWER YARD	CHILLERS	MECHANICAL DRAFT COUNTER FLOW	360	69.8	1,039	85.0	75.0	12.0	1	4	VARIABLE SPEED	7.5	460	3	14,394	TOWER TECH	TTXR-041975	NOTE 1, 2, 3

NOTES:
1. BASIS OF DESIGN IS TOWER TECH TTXR-041975.
2. VIBRATION LIMIT SWITCH
3. SEE SHEET G002 FOR WIND LOADING.

EXPANSION TANK SCHEDULE

UNIT NO.	LOCATION	SERVICE	CONTENT	SIZE			REMARKS
				DIA IN	LENGTH IN	CAP GAL	
TK-202	ATTIC DSR MECH ROOM	CHILLED WATER SYSTEM	WATER	30	84	240	DIAPHRAGM TYPE TANK

NOTES:

REV	APPROVED DATE	DESCRIPTION	JCN	REDLINE DATE	APVD

DEPARTMENT OF TRANSPORTATION
FEDERAL AVIATION ADMINISTRATION
ATO - TECHNICAL OPERATIONS WESTERN SERVICE AREA

ARTCC
MAJOR MECHANICAL MODERNIZATION
MECHANICAL EQUIPMENT SCHEDULES

DENVER LONGMONT CO

REVIEWED BY
SUBMITTED BY: PAUL TULENKO — PROJECT ENGINEER
APPROVED BY: CALLEN R. COLLINS — MGR: ENGINEERING - SEATTLE
DO NOT SIGN
DESIGNED TU
DRAWN JA
CHECKED
ISSUED BY: ENGINEERING SERVICES ENROUTE/FSS
DATE
JCN 1401893
DRAWING NO ZDV-1401893-M601
REV

ISSUED FOR:

DRAWING PRODUCED ON WSA MICROSTATION SYSTEM

sd-1401893---m601.dgn 6/27/2018 10:49:08 AM John CTR Allen
EDM: zdv-1401893-m601.dgn

AIR HANDLING UNIT SCHEDULE

UNIT NO.	LOCATION	AREA SERVICED	SUPPLY FAN DATA				SUPPLY FAN(S) MOTOR DATA					COOLING COIL DATA									HEATING COIL DATA		HUMIDIFICATION		FILTER SCHEDULE			KNOWN ACCEPTIBLE SOURCES		REMARKS
												CAPACITY		AIR				WATER			CAPACITY	WATER								
			SUPPLY AIR (CFM)	ESP (IN W.G.)	DRIVE	RPM	HP	VOLTS	PH	HZ	# FANS	TOTAL (MBH)	SENS. (MBH)	EDB (˚F)	EWB (˚F)	LDB (˚F)	LWB (˚F)	GPM	ENT (˚F)	LWT (˚F)	TOTAL (MBH)	GPM	KW	LBS/HR	MERV EFF	QTY	SIZE	MFGR.	MODEL/ SERIES	
AHU-22	B119	B134	9,000	0.50	BELT	-	10	460	3	60	2	146.7	146.7	72	54.7	58.9	49	55	46	58.7			10.20	30.00	8.00	2,4	16X20,16X25	DATA AIRE	DACD-2234	NOTE 1, 2, 3
AHU-104	B120	B120	18200	0.50	DIRECT	-	4.2	460	3	60	3	302	302	72	57.8	53.3	51	64.7	46	56	-	-	9.60	22.00	8.00	6.00	18x24	LIEBERT	CW146D	NOTE 1, 3
AHU-105	B120	B120	18200	0.50	DIRECT	-	4.2	460	3	60	3	302	302	72	57.8	53.3	51	64.7	46	56	-	-	9.60	22.00	8.00	6.00	18x24	LIEBERT	CW146D	NOTE 1, 3
AHU-106	B120	B120	15860	0.50	DIRECT	-	4.2	460	3	60	3	226	226	72	57.8	56	52.1	50.1	46	56	-	-	9.60	22.00	8.00	4.00	18x24	LIEBERT	CW106D	NOTE 1, 3
AHU-107	B120	B120	15860	0.50	DIRECT	-	4.2	460	3	60	3	226	226	72	57.8	56	52.1	50.1	46	56	-	-	9.60	22.00	8.00	4.00	18x24	LIEBERT	CW106D	NOTE 1, 3
AHU-108	B120	B120	15860	0.50	DIRECT	-	4.2	460	3	60	3	226	226	72	57.8	56	52.1	50.1	46	56	-	-	9.60	22.00	8.00	4.00	18x24	LIEBERT	CW106D	NOTE 1, 3
AHU-109	B120	B120	15860	0.50	DIRECT	-	4.2	460	3	60	3	226	226	72	57.8	56	52.1	50.1	46	56	-	-	9.60	22.00	8.00	4.00	18x24	LIEBERT	CW106D	NOTE 1, 3
AHU-400	B129	B120	1500	1.00	BELT	1500	1	480	3	60	1	41.1	41.1	93.6	60.5	72	53.6	8	45	55	116.70	7.00	18.80	55.00	13.00	2.00	16x16	CARRIER	39LC03	NOTE 3, 4

NOTE:
1. PROVIDE DOWN DISCHARGE UNITS WITH FLOOR STANDS, FACTORY INSTALLED DISCONNECT SWITCH, CONDENSATE PUMP, SMOKE DETECTOR, INFRARED TYPE HUMIDIFIER, AND FACTORY NETWORK CONTROLLER.
2. MATCH EXISTING UNITS (AHU-20,21,23) IN OPERATION AND CONFIGURATION OR PROVIDE APPROVED EQUAL.
3. UNITS SHALL UTILIZE FAN SETTINGS TO OBTAIN REQUIRED CFM AIR PROPERTIES AND TUNED GPM TO OBTAIN REQUIRED COOLING CAPACITY.
4. HUMIDIFIER IS EXTERNAL TO UNIT.

UNIT HEATER SCHEDULE

UNIT NO.	LOCATION	SERVICE	CFM	PERFORMANCE DATA				MOTOR DATA			CONSTRUCTION DATA		KNOWN ACCEPTABLE SOURCE		COMMENTS
				TSP (IN WG)	MAX OV (FPM)	MAX RPM	MAX BHP	HP AMPS	VOLTS	PH	BTU/HR	GPM	MFGR	MODEL/ SERIES	
UH-315	B115	CHILLER ROOM HEAT	1625	-	-	-	1/8	1/8 2.3	115	1	55,000	7	MODINE	HC-108	
EUH-1	PUMP HOUSE	PUMP HOUSE HEAT	830	-	-	-	-	N/A 18.7	480	3	51,000	-	MODINE	HER-150	
EUH-2	PUMP HOUSE	PUMP HOUSE HEAT	830	-	-	-	-	N/A 15.7	480	3	42,700	-	MODINE	HER-125	

NOTE:

HEAT EXCHANGER SCHEDULE

UNIT NO.	LOCATION	SERVICE	PERFORMANCE DATA CHILLED WATER					PERFORMANCE DATA CONDENSER WATER					CONSTRUCTION DATA	FRAME		KNOWN ACCEPTABLE		COMMENTS
			GPM	INLET TEMP F	OUTLET TEMP	PD	CONN.	GPM	INLET TEMP F	OUTLET TEMP	PD	CONN.	MAX PRESS.	LENGTH	WEIGHT	MFGR	MODEL/ SERIES	
HX-1	B116	CHILLED WATER SYSTEM	900	55	45	4.5	8"	1100	42	51	6.5	8"	150 PSI	5.75'	4700	SONDEX	A65-IS10-212	

NOTE:

AIR DEVICE SCHEDULE

UNIT NO.	LOCATION	TYPE & DUTY	NECK SIZE (IN.)	FACE SIZE (IN.)	CEILING TYPE	MAX NC LEVEL	MAX CFM	KNOWN ACCEPTABLE SOURCE		COMMENTS
								MFGR	MODEL/ SERIES	
CR-1	B88	PERFORATED RETURN	18 X 18	20 X 20	LAY-IN	35	2000	TITUS	PXP	NOTE 1
CD-1	B88	MODULAR SUPPLY DIFFUSER	12 X 12	24 X 24	LAY-IN	30	350	TITUS	MCD	NOTE 1
TG-1	B120A	TRANSFER GRILLE	20 X 16	20 X 16	SIDEWALL	40	650	KRUEGER	5600	NOTE 1
SR-1	B120A	SIDEWALL REGISTER	12 X 18	12 X 18	SIDEWALL	40	1400	HART & COOLEY	92HVV	NOTE 1

NOTE:
1. UNITS OF APPROVED EQUAL ARE ACCEPTABLE

DRINKING FOUNTAIN

UNIT NO.	LOCATION	DESCRIPTION	PLUMBING DATA		ELECTRICAL DATA			KNOWN ACCEPTABLE SOURCE		COMMENTS
			SUPPLY	DRAIN	AMPS	VOLTS	PH	MFGR	MODEL/ SERIES	
DF-1	B134	DRINKING FOUNTAIN	3/8"	1-1/2"	5	115	1	ELKAY	EZH2O	NOTE 1, 2

NOTE:
1. MOUNTED 52" ABOVE FINISHED CONCRETE FLOOR (34" ABOVE RAISED FLOOR)
2. INCLUDE BOTTLE FILLING OPTION

REV	APPROVED DATE	DESCRIPTION	JCN	REDLINE DATE	APVD

DEPARTMENT OF TRANSPORTATION
FEDERAL AVIATION ADMINISTRATION
ATO - TECHNICAL OPERATIONS WESTERN SERVICE AREA
ARTCC
MAJOR MECHANICAL MODERNIZATION
MECHANICAL EQUIPMENT SCHEDULES
DENVER LONGMONT CO

REVIEWED BY
SUBMITTED BY: PAUL TULENKO — PROJECT ENGINEER
APPROVED BY: CALLEN R. COLLINS — MGR: ENGINEERING - SEATTLE
DESIGNED DH
DRAWN JA
CHECKED
ISSUED BY ENGINEERING SERVICES ENROUTE/FSS
DATE
JCN 1401893
DRAWING NO ZDV-1401893-M602
REV

DO NOT SIGN

ISSUED FOR:

DRAWING PRODUCED ON WSA MICROSTATION SYSTEM

rdp-1401893-m602.dgn 7/12/2018 9:36:53 AM John CTR Allen

EDM: zdv-1401893-m602.dgn

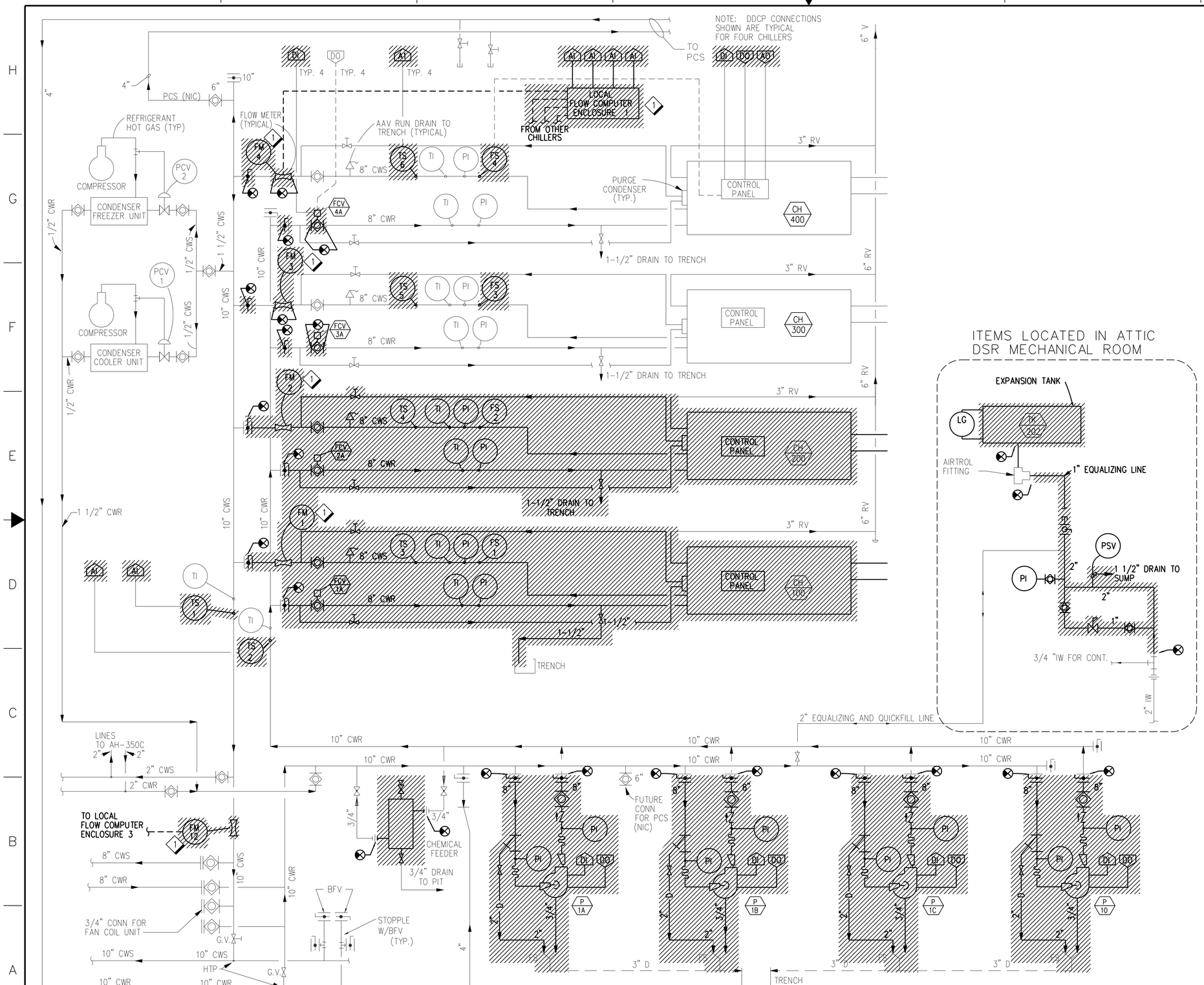

A6 M701 CHILLED WATER SYSTEM SCHEMATIC DIAGRAM - DEMOLITION

SCALE: NTS

GENERAL NOTES:

A. REFER TO PHASING SEQUENCE NOTES. DEMOLITION MAY NOT OCCUR ALL AT ONCE. REPLACEMENT OF COMPONENTS MUST BE SEQUENCED SO THAT THE FACILITY MAY REMAIN IN OPERATION.

SHEET NOTES:

1. DEMOLISH FLOW METERS AND FLOW COMPUTERS.

REV	APPROVED DATE	DESCRIPTION	JCN	REDLINE DATE	APVD

DEPARTMENT OF TRANSPORTATION
FEDERAL AVIATION ADMINISTRATION
ATO - TECHNICAL OPERATIONS — WESTERN SERVICE AREA

ARTCC

MAJOR MECHANICAL MODERNIZATION CHILLED WATER SYSTEM SCHEMATIC DIAGRAM - DEMOLITION

DENVER — LONGMONT — CO

REVIEWED BY

SUBMITTED BY: PAUL TULENKO — PROJECT ENGINEER

APPROVED BY: CALLEN R. COLLINS — MGR: ENGINEERING - SEATLLE

DESIGNED: TU
DRAWN: JA
CHECKED:

ISSUED BY: ENGINEERING SERVICES ENROUTE/FSS

DATE
JCN: 1401893
DRAWING NO: ZDV-1401893-M701
REV

ISSUED FOR:

DRAWING PRODUCED ON WSA MICROSTATION SYSTEM

EDM: zdv-1401893-m701.dgn

zdv-1401893-m701.dgn 6/27/2018 10:50:30 AM John CTR Allen

GENERAL NOTES:

A. REFER TO PHASING SEQUENCE NOTES. DEMOLITION MAY NOT OCCUR ALL AT ONCE. REPLACEMENT OF COMPONENTS MUST BE SEQUENCED SO THAT THE FACILITY MAY REMAIN IN OPERATION.

SHEET NOTES:

1. DEMOLISH FLOW METERS AND FLOW COMPUTERS.

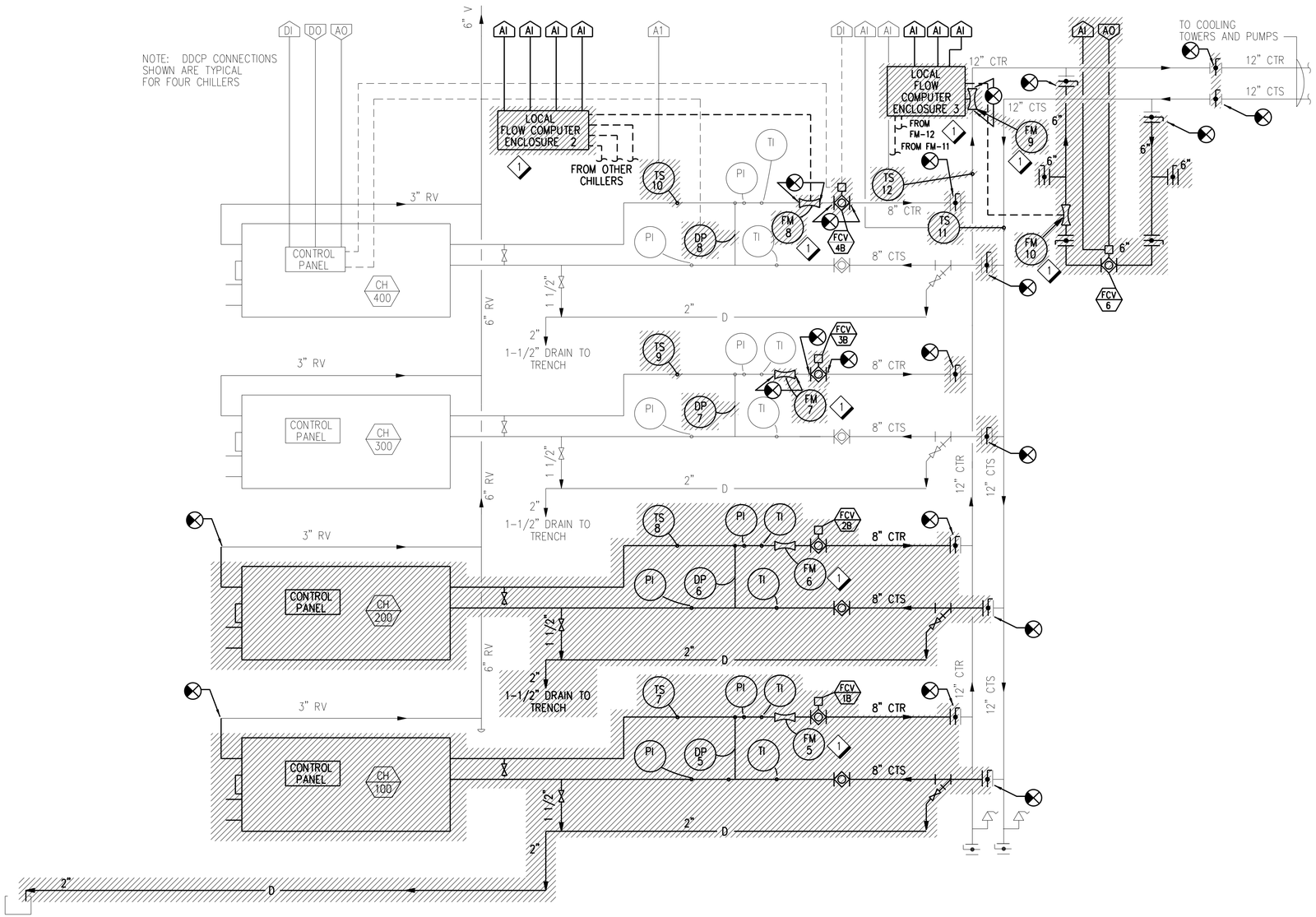

B6 / M702 CONDENSER WATER SYSTEM SCHEMATIC DIAGRAM - DEMOLITION

SCALE: NTS

REV	APPROVED DATE	DESCRIPTION	JCN	REDLINE DATE	APVD

DEPARTMENT OF TRANSPORTATION
FEDERAL AVIATION ADMINISTRATION
ATO - TECHNICAL OPERATIONS WESTERN SERVICE AREA

ARTCC
MAJOR MECHANICAL MODERNIZATION
CONDENSER WATER SYSTEM
SCHEMATIC DIAGRAM - DEMOLITION

DENVER LONGMONT CO

REVIEWED BY
SUBMITTED BY: PAUL TULENKO — PROJECT ENGINEER
APPROVED BY: CALLEN R. COLLINS — MGR: ENGINEERING - SEATTLE
DO NOT SIGN

DESIGNED TU
DRAWN JA
CHECKED
ISSUED BY: ENGINEERING SERVICES ENROUTE/FSS
DATE
JCN 1401893
DRAWING NO ZDV-1401893-M702
REV

ISSUED FOR:

DRAWING PRODUCED ON WSA MICROSTATION SYSTEM

EDM: zdv-1401893-m702.dgn

zdv-1401893-m702.dgn
6/27/2018 10:50:41 AM John CTR Allen

GENERAL NOTES:

A. CONTRACTOR SHALL PERFORM DEMOLITION ACCORDING TO AN APPROVED PHASING PLAN. REFER TO DEMOLITION SHEETS M101, M102 AND M103 FOR THE EXTENT OF DEMOLITION WORK ASSOCIATED WITH REMOVAL OF JOHNSON CONTROLS IN THE CHILLER PLANT.

B. COOLING TOWER WATER SUMP LEVEL CONTROLS SHALL BE CONNECTED TO SCHNEIDER ELECTRIC CONTROLS. SEE NOTE 10 ON SHEET M104.

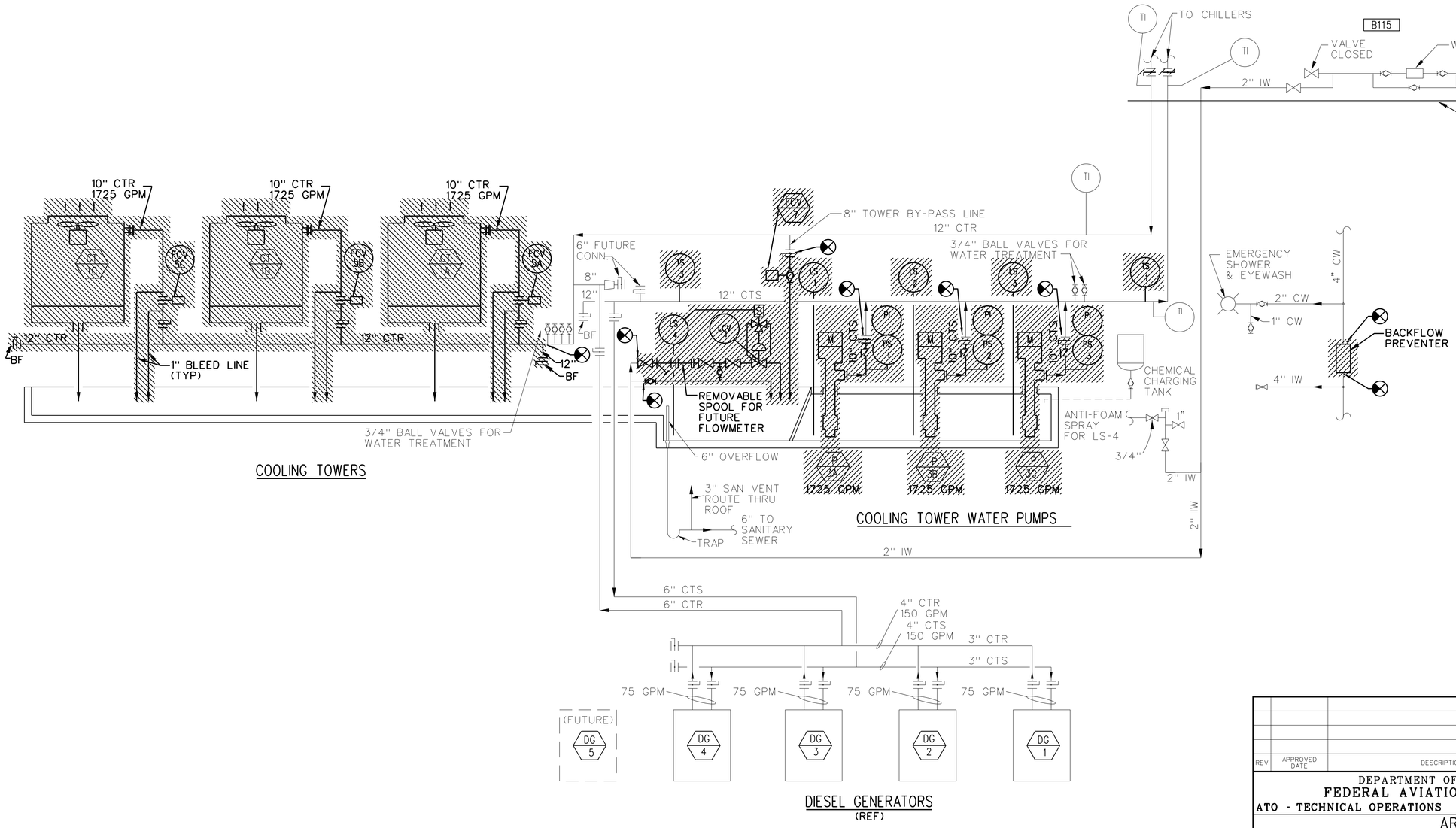

A8 / M703 COOLING TOWER WATER SYSTEM SCHEMATIC DIAGRAM - DEMOLITION
SCALE: NTS

REV	APPROVED DATE	DESCRIPTION	JCN	REDLINE DATE	APVD

DEPARTMENT OF TRANSPORTATION
FEDERAL AVIATION ADMINISTRATION
ATO - TECHNICAL OPERATIONS — WESTERN SERVICE AREA

ARTCC

MAJOR MECHANICAL MODERNIZATION
COOLING TOWER WATER SYSTEM
SCHEMATIC DIAGRAM - DEMOLITION

DENVER — LONGMONT — CO

REVIEWED BY

SUBMITTED BY: PAUL TULENKO — PROJECT ENGINEER

APPROVED BY: CALLEN R. COLLINS — MGR: ENGINEERING - SEATTLE

DO NOT SIGN

DESIGNED TU
DRAWN JA
CHECKED

ISSUED BY: ENGINEERING SERVICES ENROUTE/FSS

DATE
JCN 1401893
DRAWING NO ZDV-1401893-M703
REV

ISSUED FOR:

DRAWING PRODUCED ON WSA MICROSTATION SYSTEM

rd-1401893-m703.dgn 6/27/2018 10:53:11 AM John CTR Allen

EDM: zdv-1401893-m703.dgn

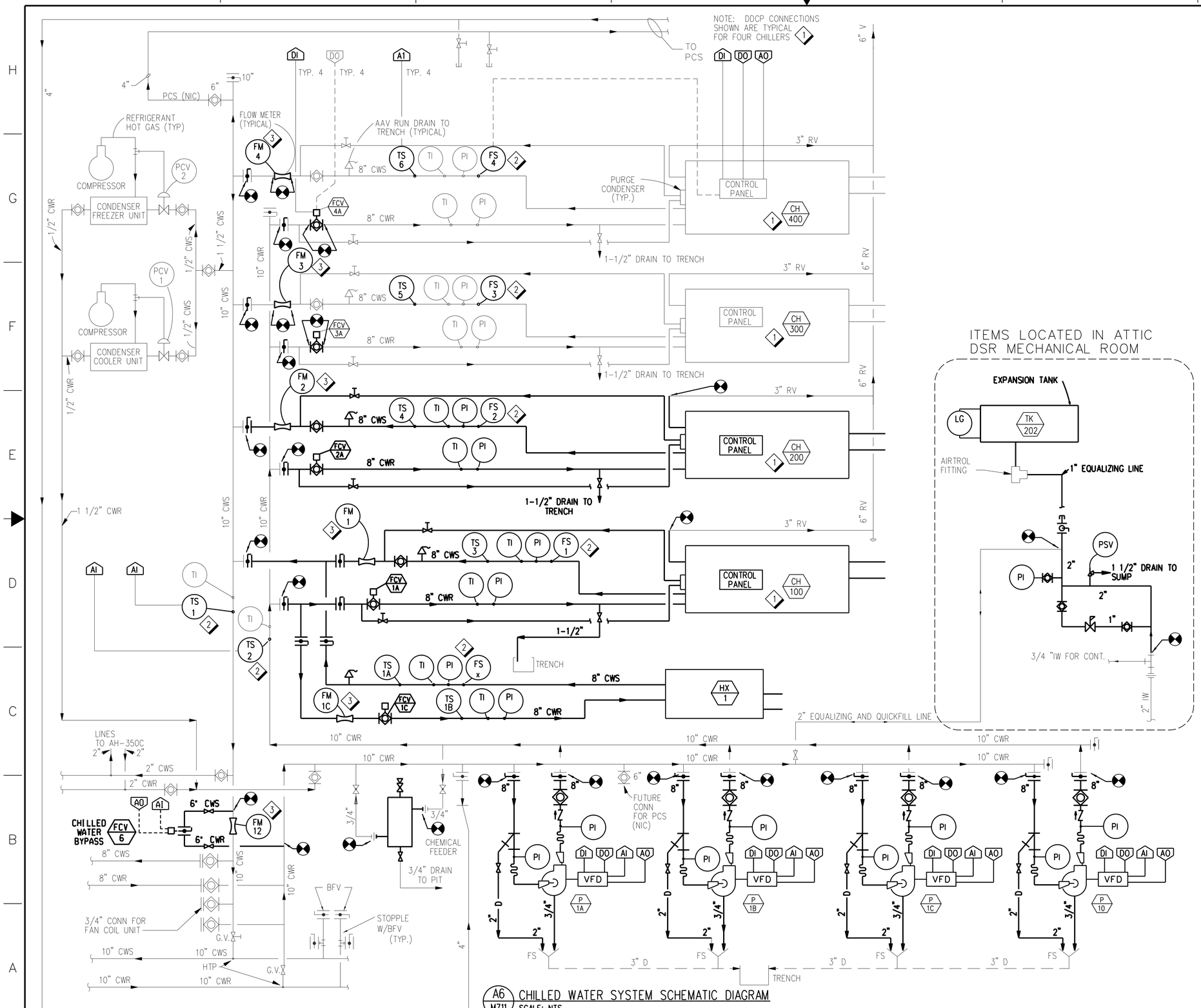

A6 M711 CHILLED WATER SYSTEM SCHEMATIC DIAGRAM
SCALE: NTS

SHEET NOTES:

1. PROVIDE NETWORK INTERFACE AT CHILLER CONTROL PANEL. EACH PANEL SHALL BE CONNECTED TO DDCS SO IT CAN BE MONITORED AND/OR CONTROLLED BY DDCS. SEE DDCS POINT FUNCTION SCHEDULE FOR LIST OF CHILLER POINTS TO BE MONITORED BY DDCS THROUGH A NETWORK INTERFACE.
2. CHILLER CHILLED WATER INLET/OUTLET TEMPERATURE SENSORS, PRESSURE SWITCHES AND FLOW SWITCHES PROVIDED BY CHILLER MANUFACTURER. SEE DDCS POINT FUNCTION SCHEDULE FOR LIST OF CHILLER POINTS TO BE MONITORED BY DDCS THROUGH A NETWORK INTERFACE.
3. PROVIDE FLOW METER AND RECONNECT TO BAS.

REV	APPROVED DATE	DESCRIPTION	JCN	REDLINE DATE	APVD

DEPARTMENT OF TRANSPORTATION
FEDERAL AVIATION ADMINISTRATION
ATO - TECHNICAL OPERATIONS WESTERN SERVICE AREA
ARTCC

MAJOR MECHANICAL MODERNIZATION CHILLED WATER SYSTEM SCHEMATIC DIAGRAM

DENVER LONGMONT CO

REVIEWED BY
SUBMITTED BY: PAUL TULENKO
PROJECT ENGINEER
APPROVED BY: CALLEN R. COLLINS
MGR: ENGINEERING - SEATTLE

DESIGNED TU
DRAWN JA
CHECKED
ISSUED BY: ENGINEERING SERVICES ENROUTE/FSS
DATE
JCN 1401893
DRAWING NO ZDV-1401893-M711
REV

ISSUED FOR:

DRAWING PRODUCED ON WSA MICROSTATION SYSTEM

zdv-1401893-m711.dgn 6/27/2018 10:35:48 AM John C?R Allen

EDM: zdv-1401893-m711.dgn

SHEET NOTES:

1. CHILLER CONDENSER WATER INLET/OUTLET TEMPERATURE SENSORS, PRESSURE SWITCHES AND FLOW SWITCHES PROVIDED BY CHILLER MANUFACTURER. SEE DDCS POINT FUNCTION SCHEDULE FOR LIST OF CHILLER POINTS TO BE MONITORED BY DDCS THROUGH A NETWORK INTERFACE.
2. PROVIDE FLOW METER AND CONNECT TO BAS.

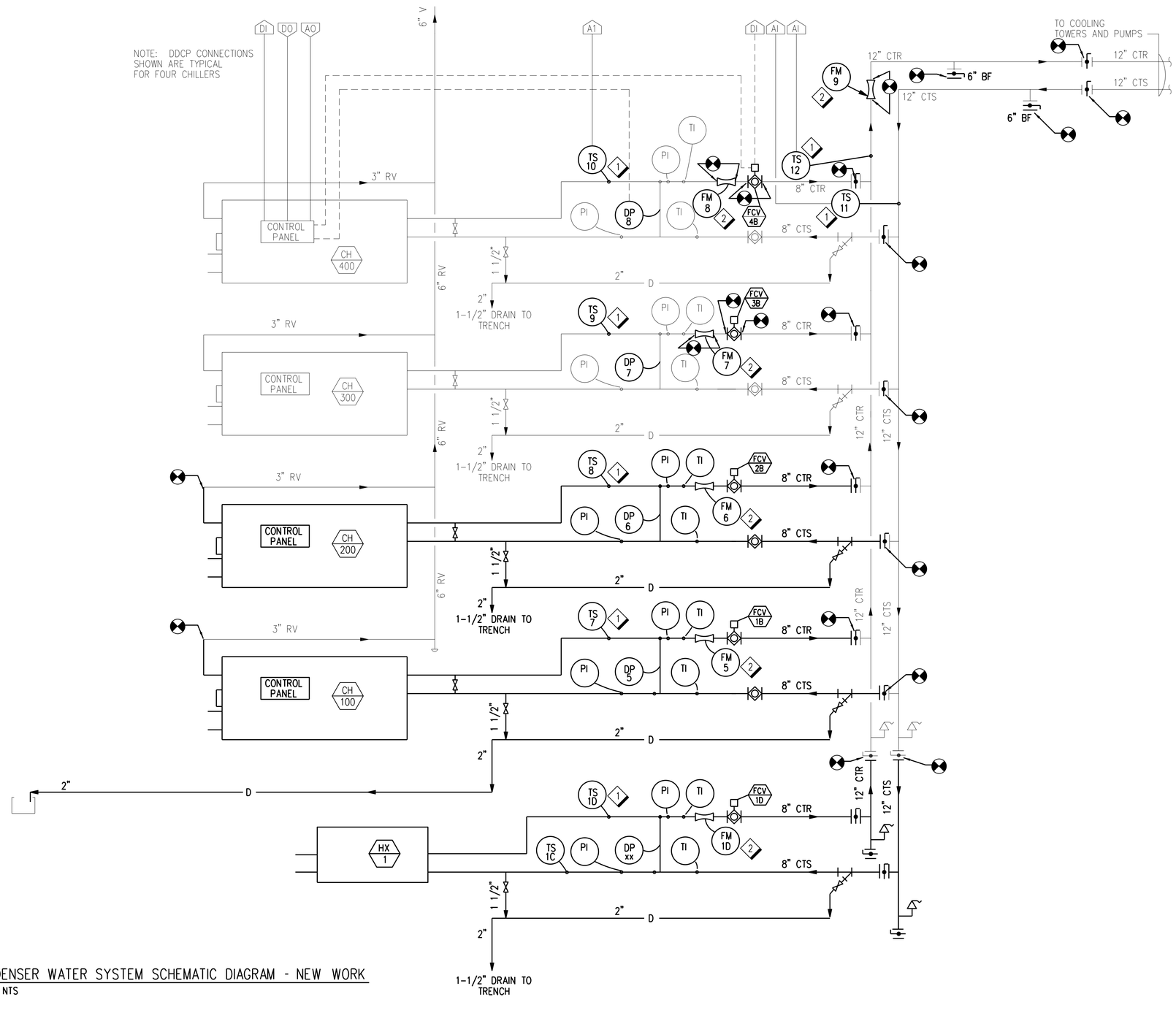

A8 / M712 CONDENSER WATER SYSTEM SCHEMATIC DIAGRAM - NEW WORK
SCALE: NTS

REV	APPROVED DATE	DESCRIPTION	JCN	REDLINE DATE	APVD

DEPARTMENT OF TRANSPORTATION
FEDERAL AVIATION ADMINISTRATION
ATO - TECHNICAL OPERATIONS — WESTERN SERVICE AREA

ARTCC
MAJOR MECHANICAL MODERNIZATION
CONDENSER WATER SYSTEM
SCHEMATIC DIAGRAM

DENVER — LONGMONT — CO

REVIEWED BY
SUBMITTED BY: PAUL TULENKO — PROJECT ENGINEER
APPROVED BY: CALLEN R. COLLINS — MGR: ENGINEERING - SEATTLE
DO NOT SIGN
DESIGNED: TU
DRAWN: JA
CHECKED
ISSUED BY: ENGINEERING SERVICES ENROUTE/FSS
DATE
JCN: 1401893
DRAWING NO: ZDV-1401893-M712
REV

ISSUED FOR:

DRAWING PRODUCED ON WSA MICROSTATION SYSTEM

EDM: zdv-1401893-m712.dgn

SHEET NOTES:

1. CONNECT FAN VIBRATION ALARM CONTACTS TO DDCS.

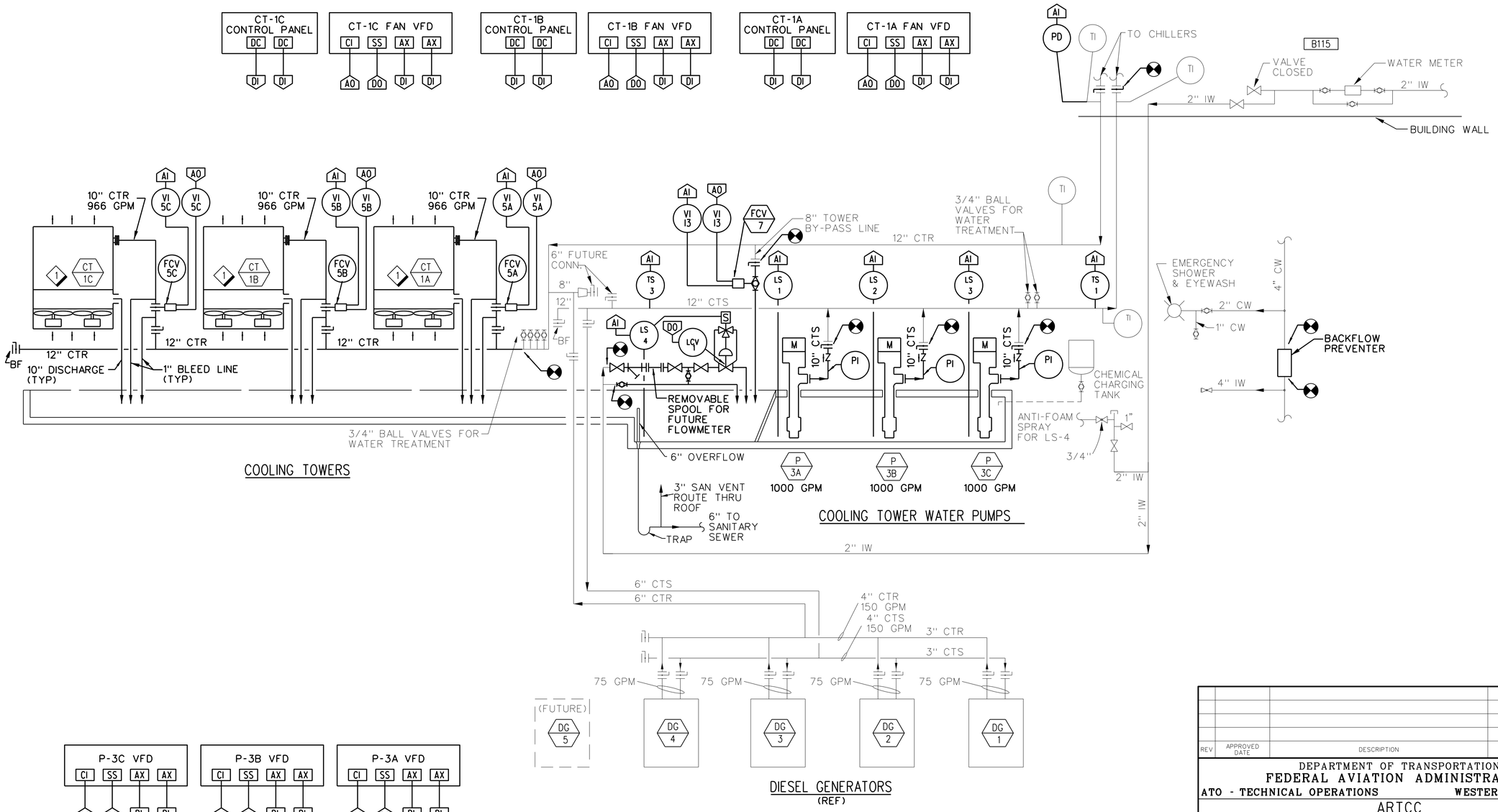

A8 / M713 COOLING TOWER WATER SYSTEM SCHEMATIC DIAGRAM - NEW WORK
SCALE: NTS

REV	APPROVED DATE	DESCRIPTION	JCN	REDLINE DATE	APVD

DEPARTMENT OF TRANSPORTATION
FEDERAL AVIATION ADMINISTRATION
ATO - TECHNICAL OPERATIONS — WESTERN SERVICE AREA

ARTCC

MAJOR MECHANICAL MODERNIZATION
COOLING TOWER WATER SYSTEM
SCHEMATIC DIAGRAM

DENVER — LONGMONT — CO

REVIEWED BY

SUBMITTED BY: PAUL TULENKO — PROJECT ENGINEER
APPROVED BY: CALLEN R. COLLINS — MGR: ENGINEERING - SEATTLE

DESIGNED TU
DRAWN JA
CHECKED

ISSUED BY: ENGINEERING SERVICES ENROUTE/FSS

DATE
JCN 1401893
DRAWING NO ZDV-1401893-M713
REV

ISSUED FOR:

DRAWING PRODUCED ON WSA MICROSTATION SYSTEM

EDM: zdv-1401893-m713.dgn

rsh-1401893-m713.dgn 7/11/2018 5:08:24 PM John CTR Allen

GENERAL NOTES:

A. FOR SYMBOLS AND ABBREVIATIONS REFER TO SHEET M001.

B. SEE DIVISION 23 "HVAC INSTRUMENTATION AND CONTROLS" FOR SEQUENCE OF OPERATION.

SHEET NOTES:

1. MOTOR STARTER
2. PROVIDE INTERLOCK WIRING BETWEEN FAN AND ASSOCIATED ISOLATION DAMPER. WHEN FAN IS COMMANDED TO START IN EITHER HAND OR AUTO MODE, ISOLATION DAMPER SHALL OPEN. ONCE ISOLATION DAMPER IS PROVEN OPEN BY ASSOCIATED DAMPER POSITION SWITCH, FAN SHALL START. FAN SHALL STOP IF ASSOCIATED ISOLATION DAMPER CLOSES.

REFRIGERANT LEAK MONITOR NOTES:

1. RM-1 TRANSFERS AT 25 PPM FOR R-123.
2. RM-2 TRANSFERS AT 35 PPM FOR R-123.
3. ····· DENOTES WIRING TO DDCP
4. INDICATED CONTROL DIAGRAMS ARE SHOWN GENERICALLY ONLY AND MAY DIFFER FROM THE ACTUAL PROCURED EQUIPMENT.

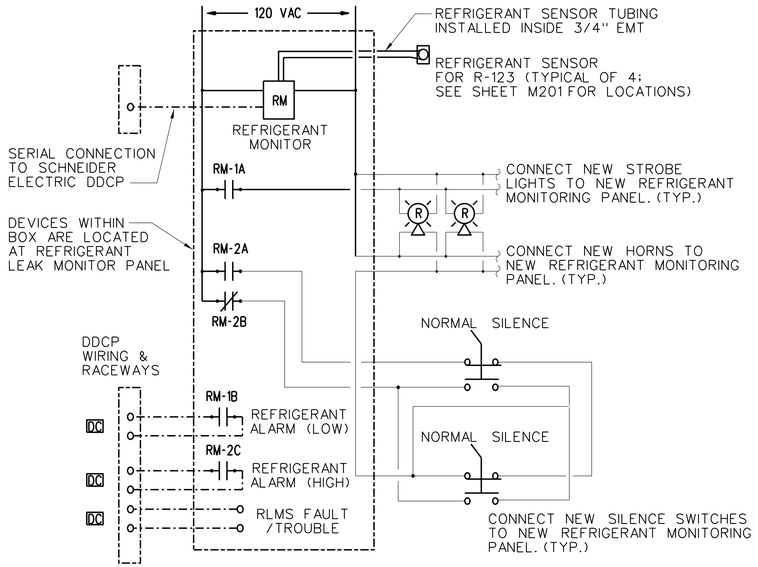

D8 / M801 REFRIGERANT LEAK MONITOR - CONTROL DIAGRAM
NTS

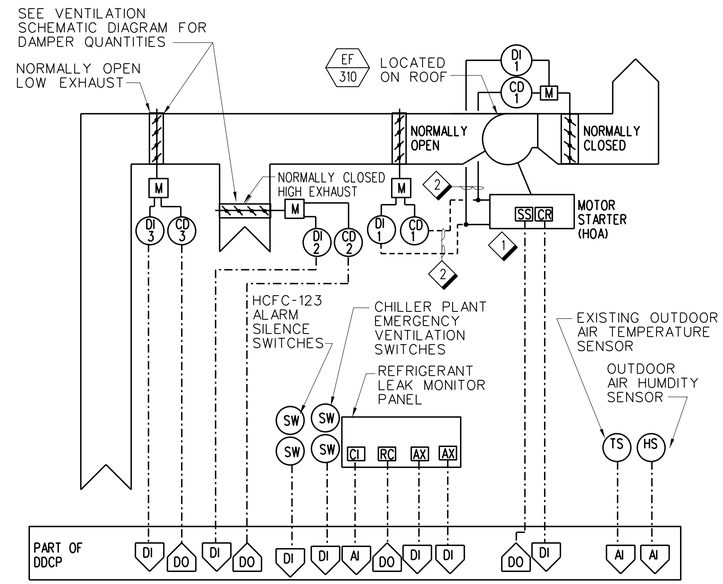

D5 / M801 CHILLER PLANT EXHAUST CONTROL DIAGRAM
NTS

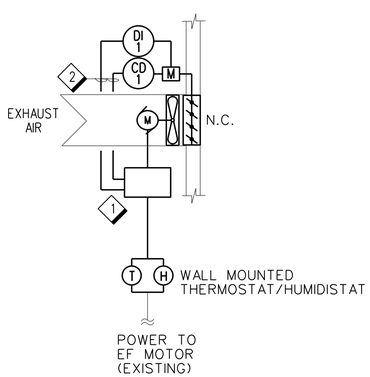

A8 / M802 EXHAUST FAN - CONTROL DIAGRAM
NTS — EF-101A, EF101B

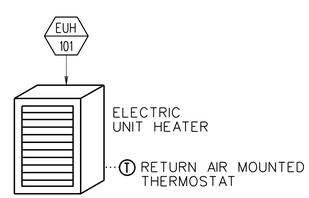

A6 / M801 ELECTRIC UNIT HEATER - CONTROL DIAGRAM
NTS — UH-101

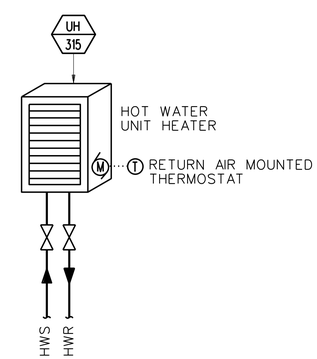

A4 / M801 HOT WATER UNIT HEATER - CONTROL DIAGRAM
NTS — UH-315

REV	APPROVED DATE	DESCRIPTION	JCN	REDLINE DATE	APVD

DEPARTMENT OF TRANSPORTATION
FEDERAL AVIATION ADMINISTRATION
ATO - TECHNICAL OPERATIONS — WESTERN SERVICE AREA

ARTCC
MAJOR MECHANICAL MODERNIZATION

HVAC CONTROL DIAGRAMS

DENVER — LONGMONT — CO

REVIEWED BY	SUBMITTED BY: PAUL TULENKO (DO NOT SIGN)	APPROVED BY: CALLEN R. COLLINS (DO NOT SIGN)
	PROJECT ENGINEER	MGR: ENGINEERING - SEATTLE
DESIGNED TU	ISSUED BY: ENGINEERING SERVICES ENROUTE/FSS	DATE / JCN 1401893
DRAWN JA		DRAWING NO ZDV-1401893-M801 / REV
CHECKED		

ISSUED FOR:

rdr-1401893-m801.dgn 6/27/2018 10:53:21 AM John CTR Allen

EDM: zdv-1401893-m801.dgn

DRAWING PRODUCED ON WSA MICROSTATION SYSTEM

POINT DESCRIPTION	HARDWARE										FAIL MODE				SOFTWARE																			GRAPHICS				ALARM LIMITS		NOTES
	DEVICE CODE	SUPERVISED WIRING	ANALOG INPUT	DIGITAL INPUT	ADDRESSABLE INPUT	ACCUMULATOR INPUT	ANALOG OUTPUT	2 STATE DIGITAL OUTPUT	3 STATE DIGITAL OUTPUT	ADDRESSABLE OUTPUT	FAIL ON (OPEN)	FAIL OFF (CLOSED)	LAST COMMAND STATE	LOCAL DEFAULT	NETWORK POINT	CALCULATED POINT	MAINTENANCE ALARM	CRITICAL ALARM	PROGRAM START (STOP)	OPTIMUS START (STOP)	MORNING WARM/COOL	DEMAND LIMIT	DUTY CYCLE	ENTHALPY ECONOMIZER	DIRECT DIGITAL CONTROL	SET POINT ADJUSTMENT	TOTALIZER	RUN TIME	LIGHTING CONTROL	TENANT BILLING	ALARM INSTRUCTIONS	MAINTENANCE WORK ORDER	ALARM LIMITS	SOFTWARE INTERLOCKS	2-D GRAPHICS	3-D GRAPHICS	FLOOR PLAN	POINT LIST	LOW LIMIT	HIGH LIMIT	
CHILLED WATER SYSTEM - NEW																																			•		•	•			
(CH-100, CH-200, CH-300, CH-400 & P-1A THRU P-1D																			•																						
CHILLER ENABLE/DISABLE	ED							•						•																			•								TYPICAL FOR 4
CHILLER SET POINT ADJUSTMENT	CI																	•								•															TYPICAL FOR 4
CHILLER TROUBLE/FAULT	AX			•																																					TYPICAL FOR 4
CHILLER AMPERAGE	-		•												•																										TYPICAL FOR 4
CHILLER POWER DEMAND (kW)	-		•												•																										TYPICAL FOR 4
CHILLER STATUS	AX			•											•			•													•										TYPICAL FOR 4
CHILLER CHW SUPPLY TEMPERATURE	TS		•														•														•		•						40°F	50°F	TYPICAL FOR 4
CHILLER CHW RETURN TEMPERATURE	TS		•														•														•		•						50°F	60°F	TYPICAL FOR 4
CHILLER CHW DP SWITCH	PS			•													•														•										TYPICAL FOR 4
CHILLER CHW FLOW METER	FM		•														•														•										TYPICAL FOR 4
CHILLER CW SUPPLY TEMPERATURE	TS		•														•														•		•						60°F	90°F	TYPICAL FOR 4
CHILLER CW RETURN TEMPERATURE	TS		•														•														•		•						65°F	95°F	TYPICAL FOR 4
CHILLER CW DP SWITCH	PS			•													•														•										TYPICAL FOR 4
CHILLER CW FLOW METER	FM		•														•														•										TYPICAL FOR 4
CHILLER CHW DIFFERENTIAL PRESSURE	PD		•														•														•										TYPICAL FOR 4
CHILLER CHW ISOLATION VALVE CONTROL	CV						•						•						•						•									•							TYPICAL FOR 4
CHILLER CHW ISOLATION VALVE POSITION	VI		•															•													•										TYPICAL FOR 4
CHILLER CW ISOLATION VALVE CONTROL	CV						•						•						•						•									•							TYPICAL FOR 4
CHILLER CW ISOLATION VALVE POSITION	VI		•															•													•										TYPICAL FOR 4
CHW PUMP START/STOP	SS							•					•						•															•							TYPICAL FOR 4
CHW PUMP STATUS	AX			•														•										•			•										TYPICAL FOR 4
CHW PUMP SPEED CONTROL	CI						•							•											•																TYPICAL FOR 4
CHW PUMP BYPASS STATUS	AX			•														•										•			•										TYPICAL FOR 4
REFRIFGERANT LEAK MONITORING SYSTEM																																		•		•	•				
REFRIGERANT LEAK ALARM (LOW LEVEL ALARM)	DC			•														•													•										
REFRIGERANT LEAK ALARM (HIGH LEVEL ALARM)	DC			•														•													•										
RLMS PANEL FAULT/TROUBLE	DC			•													•														•										
REFRIGERANT LOW LEAK ALARM TO BAS	AX							•							•			•													•										OUTPUT FROM MONITOR
REFRIGERANT HIGH LEAK ALARM TO BAS	AX							•							•			•													•										OUTPUT FROM MONITOR
EXHAUST FAN (EF-310)																																		•		•	•				
EXHAUST FAN START/STOP	SS							•				•																					•								
EXHAUST FAN STATUS	CR			•							•							•										•			•										
SPACE TEMPERATURE	TS		•																																				-	90°F	
OUTDOOR INTAKE DAMPER CONTROL	CD							•					•																					•							
LOW EXHAUST DAMPER CONTROL	CD							•					•																												
HIGH EXHAUST DAMPER CONTROL	CD							•																																	
SILENCE SWITCH	DI			•														•													•										
EMERG. VENTILATION SWITCH	DI			•														•													•										
CONDENSER WATER SYSTEM - NEW																																		•		•	•				
(CT-1A THRU CT-1C & P-3A THRU P-3C)																																									
COOLING TOWER FAN START/STOP	SS							•					•						•															•							TYPICAL FOR 3
COOLING TOWER FAN STATUS	AX			•														•										•			•										TYPICAL FOR 3
COOLING TOWER FAN SPEED CONTROL	CI						•							•											•																TYPICAL FOR 3
COOLING TOWER FAN BYPASS MODE	AX			•														•										•			•										TYPICAL FOR 3
COOLING TOWER FAN OIL LEVEL ALARM	DC			•													•														•										TYPICAL FOR 3
COOLING TOWER FAN VIBRATION ALARM	DC			•													•														•										TYPICAL FOR 3
COOLING TOWER ISOLATION VALVE CONTROL	CV						•						•						•															•							TYPICAL FOR 3
COOLING TOWER ISOLATION VALVE POSITION	VI		•															•													•										TYPICAL FOR 3
CONDENSER WATER SUMP LEVEL	LS		•															•													•										TYPICAL FOR 4
CW/CT VFD START/STOP	SS							•					•						•															•							TYPICAL FOR 3
CW/CT PUMP STATUS	AX			•														•										•			•										TYPICAL FOR 3
CW/CT VFD FREQUENCY	AO						•							•											•																TYPICAL FOR 3
CW/CT VFD FAULT/ALARM	DI																																								
CW/CT VFD POWER OUTPUT	AO																																								
CW/CT VFD POWER USAGE	AI																																								
CW/CT PUMP BYPASS MODE	AX			•														•										•			•										TYPICAL FOR 3
CONDENSER WATER SUPPLY TMPERATURE	TS		•														•														•		•						50°F	90°F	
CONDENSER WATER RETURN TEMPERATURE	TS		•														•														•		•						60°F	100°F	
CONDENSER WATER LOOP DIFF. PRESSURE	PD		•														•														•		•						10 PSI	20 PSI	
CONDENSER WATER BYPASS VALVE CONTROL	CV						•						•																					•							
CONDENSER WATER BYPASS VALVE POSITION	VI		•															•													•										
CW TREATMENT SYSTEM PUMP START/STOP (P-4A)	SS							•					•						•															•							
CW TREATMENT SYSTEM PUMP STATUS (P-4A)	CR			•														•										•			•										
MAKEUP WATER CONTROL VALVE CONTROL	CV							•					•												•									•							
MAKEUP WATER CONTROL VALVE POSITION	VI			•														•													•										
HEAT EXCHANGER - NEW																																		•		•	•				
HX FLOW METER	FM		•																																						
FCV 1C (CHILLED WATER) COMMAND	FCV						•					•																													
FCV 1D (CONDENSER WATER) COMMAND	FCV						•					•																													
FCV 1C (CHILLED WATER) FEEDBACK	FCV		•																																						
FCV 1D (CONDENSER WATER) FEEDBACK	FCV		•																																						
CW SUPPLY TEMP TS 1A	TS		•																													•						35°F	-		
CW RETURN TEMP TS 1B	TS		•																													•						35°F	-		
COND. SUPPLY TEMP TS 1C	TS		•																													•						35°F	-		
COND. RETURN TEMP TS 1D	TS		•																													•						35°F	-		

GENERAL NOTES

A. FOR SYMBOLS AND ABBREVIATIONS REFER TO SHEET M001.

B. SEE DIVISION 23 "HVAC INSTRUMENTATION AND CONTROLS" FOR SEQUENCE OF OPERATION.

SHEET NOTES

1. LISTED ALARM LIMITS ARE INITIAL SETTINGS ONLY. ACTUAL ALARM LIMITS MAY DIFFER DEPENDING ON ACTUAL OPERATING CONDITIONS.

REV	APPROVED DATE	DESCRIPTION	JCN	REDLINE DATE	APVD

DEPARTMENT OF TRANSPORTATION
FEDERAL AVIATION ADMINISTRATION
ATO - TECHNICAL OPERATIONS WESTERN SERVICE AREA

ARTCC
MAJOR MECHANICAL MODERNIZATION

DDCS POINT FUNCTION SCHEDULE

DENVER LONGMONT CO

REVIEWED BY

SUBMITTED BY: PAUL TULENKO — PROJECT ENGINEER

APPROVED BY: CALLEN R. COLLINS — MGR: ENGINEERING - SEATTLE

DESIGNED TU
DRAWN JA
CHECKED

ISSUED BY: ENGINEERING SERVICES ENROUTE/FSS

DATE
JCN 1401893
DRAWING NO ZDV-1401893-M802
REV

ISSUED FOR:

DO NOT SIGN

DRAWING PRODUCED ON WSA MICROSTATION SYSTEM

zdv-1401893-m802.dgn 7/11/2018 5:09:44 PM John CTR Allen

GENERAL NOTES:

A. FOR SYMBOLS AND ABBREVIATIONS REFER TO SHEET M001.
B. SEE DIVISION 23 "HVAC INSTRUMENTATION AND CONTROLS" FOR SEQUENCE OF OPERATION.

SHEET NOTES:

1. MOTOR STARTER
2. INTERLOCK AHU WITH FIRE ALARM SYSTEM THROUGH AN ADDRESSABLE INTERFACE DEVICE (AID) TO STOP AHU WHEN A DUCT SMOKE DETECTOR ASSOCIATED WITH AHU SENSES PARTICLES OF COMBUSTION. THIS INTERLOCK SHALL BE HARD WIRED AND NOT PERFORMED THROUGH THE DDCS. AID AND DUCT SMOKE DETECTOR FURNISHED AND INSTALLED UNDER DIVISION 28.
3. PROVIDE INTERLOCK WIRING BETWEEN FAN AND ASSOCIATED ISOLATION DAMPER. WHEN FAN IS COMMANDED TO START IN EITHER HAND OR AUTO MODE, ISOLATION DAMPER SHALL OPEN. ONCE ISOLATION DAMPER IS PROVEN OPEN BY ASSOCIATED DAMPER POSITION SWITCH, FAN SHALL START. FAN SHALL STOP IF ASSOCIATED ISOLATION DAMPER CLOSES.
4. XXX REPRESENTS ASSOCIATED UNIT NUMBER. SEE SHEET M211 AND M212 OR CONSULT COR FOR LOCATIONS OF SPACE TEMPERATURE AND HUMIDITY SENSORS.
5. CONNECT UNIT MOUNTED BACNET INTERFACE CARD TO DDCS BACNET NETWORK. PROVIDE CRAC MONITORING POINTS, INDICATED IN POINTS LIST, TO THE DDCS THROUGH THE COMMUNICATION INTERFACE.
6. MANUFACTURER'S PACKAGED CONTROLLER ASSOCIATED WITH COMPUTER ROOM AIR HANDLING UNIT SHALL COMMUNICATE WITH DDCS VIA UNIT MOUNTED BACNET COMPATIBLE INTERFACE CARD.
7. HARDWARE INTERLOCK HUMIDIFIER WITH AIRFLOW SWITCH. WHEN THE AIRFLOW SWITCH INDICATES THAT THERE IS NO AIR FLOW, HUMIDIFIER SHALL BE DISABLED.
8. PROVIDE COVERAGE OF 12 INCHES OF ACTIVE ELEMENT PER SQUARE FOOT OF COIL. HARD WIRE INTERLOCK FREEZE STAT WITH FAN TO STOP FAN WHEN FREEZE STAT IS ACTIVE. SET TO 38degF.

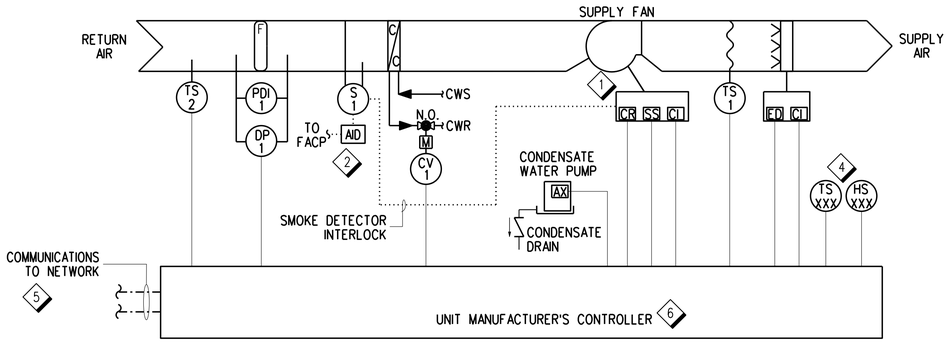

E8 M811 COMPUTER ROOM AIR HANDLING UNIT - CONTROL DIAGRAM
NTS AHU-104 THRU AHU-109

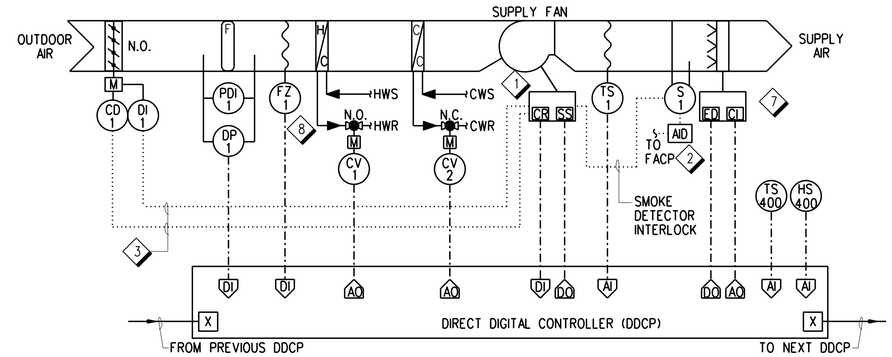

E5 M811 OUTDOOR AIR HANDLING UNIT - CONTROL DIAGRAM
NTS AHU-400

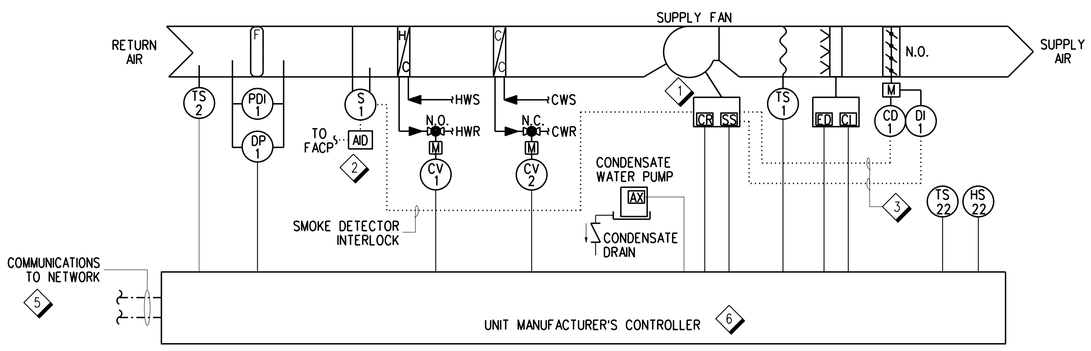

B8 M811 COMPUTER ROOM AIR HANDLING UNIT - CONTROL DIAGRAM
NTS AHU-22

REV	APPROVED DATE	DESCRIPTION	JCN	REDLINE DATE	APVD

DEPARTMENT OF TRANSPORTATION
FEDERAL AVIATION ADMINISTRATION
ATO - TECHNICAL OPERATIONS WESTERN SERVICE AREA

ARTCC
MAJOR MECHANICAL MODERNIZATION
HVAC CONTROL DIAGRAMS

DENVER LONGMONT CO

REVIEWED BY
SUBMITTED BY: PAUL TULENKO — PROJECT ENGINEER
APPROVED BY: CALLEN R. COLLINS — MGR: ENGINEERING - SEATTLE
DO NOT SIGN
DESIGNED DH
DRAWN JA
CHECKED
ISSUED BY: ENGINEERING SERVICES ENROUTE/FSS
DATE
JCN 1401893
DRAWING NO ZDV-1401893-M811
REV

ISSUED FOR:

zdv-1401893-m811.dgn 6/27/2018 10:54:23 AM John (CTR) Allen

EDMS: zdv-1401893-m811.dgn

DRAWING PRODUCED ON WSA MICROSTATION SYSTEM

GENERAL NOTES:

A. FOR SYMBOLS AND ABBREVIATIONS REFER TO SHEET M001.

B. SEE DIVISION 23 "HVAC INSTRUMENTATION AND CONTROLS" FOR SEQUENCE OF OPERATION.

SHEET NOTES:

1. LISTED ALARM LIMITS ARE INITIAL SETTINGS ONLY. ACTUAL ALARM LIMITS MAY DIFFER DEPENDING ON ACTUAL OPERATING CONDITIONS.

● DENOTES NEW DDCS POINT

■ DENOTES NETWORK POINT

POINT DESCRIPTION	HARDWARE										FAIL MODE				SOFTWARE																			GRAPHICS				ALARM LIMITS		NOTES
	DEVICE CODE	SUPERVISED WIRING	ANALOG INPUT	DIGITAL INPUT	ADDRESSABLE INPUT	ACCUMULATOR INPUT	ANALOG OUTPUT	2 STATE DIGITAL OUTPUT	3 STATE DIGITAL OUTPUT	ADDRESSABLE OUTPUT	FAIL ON (OPEN)	FAIL OFF (CLOSED)	LAST COMMAND STATE	LOCAL DEFAULT	NETWORK POINT	CALCULATED POINT	MAINTENANCE ALARM	CRITICAL ALARM	PROGRAM START (STOP)	OPTIMUS START (STOP)	MORNING WARM/COOL	DEMAND LIMIT	DUTY CYCLE	ENTHALPY ECONOMIZER	DIRECT DIGITAL CONTROL	SET POINT ADJUSTMENT	TOTALIZER	RUN TIME	LIGHTING CONTROL	TENANT BILLING	ALARM INSTRUCTIONS	MAINTENANCE WORK ORDER	ALARM LIMITS	SOFTWARE INTERLOCKS	2-D GRAPHICS	3-D GRAPHICS	FLOOR PLAN	POINT LIST	LOW LIMIT (1)	HIGH LIMIT (1)	
COMPUTER ROOM AIR CONDITIONERS																																			▪		▪	▪			TYPICAL FOR 5
AHU 104 THRU AHU 109																																									TYPICAL FOR 5
SUPPLY FAN START/STOP	SS							▪				▪			▪				▪																						TYPICAL FOR 5
SUPPLY FAN STATUS	CR			▪											▪			▪										▪			▪										TYPICAL FOR 5
SUPPLY FAN SPEED CONTROL	CI						▪							▪	▪																										TYPICAL FOR 5
SPACE TEMPERATURE	TS		▪												▪		▪														▪		▪						60°F	80°F	TYPICAL FOR 5
SPACE HUMIDITY	HS		▪												▪																								35%	65%	TYPICAL FOR 5
SUPPLY AIR TEMPERATURE	TS		▪												▪		▪														▪		▪						50°F	80°F	TYPICAL FOR 5
RETURN AIR TEMPERATURE	TS		▪												▪		▪														▪		▪						50°F	80°F	TYPICAL FOR 5
FILTER ALARM	DP			▪											▪		▪														▪		▪								TYPICAL FOR 5
COOLING COIL CONTROL VALVE	CV						▪				▪				▪										▪																TYPICAL FOR 5
HUMIDIFIER ENABLE/DISABLE	ED							▪				▪			▪										▪																TYPICAL FOR 5
HUMIDIFIER CONTROL	CI						▪					▪			▪										▪																TYPICAL FOR 5
CONDENSATE PUMP ALARM	AX			▪											▪			▪													▪										TYPICAL FOR 5
COMPUTER ROOM AIR CONDITIONERS																																			▪		▪	▪			
AHU 22																																									
SUPPLY FAN START/STOP	SS							▪				▪			▪				▪																						
SUPPLY FAN STATUS	CR			▪											▪			▪										▪			▪										
SPACE TEMPERATURE	TS		▪												▪		▪														▪		▪						60°F	80°F	
SPACE HUMIDITY	HS		▪												▪																								35%	65%	
SUPPLY AIR TEMPERATURE	TS		▪												▪		▪														▪		▪						50°F	80°F	
RETURN AIR TEMPERATURE	TS		▪												▪		▪														▪		▪						50°F	80°F	
FILTER ALARM	DP			▪											▪		▪														▪										
COOLING COIL CONTROL VALVE	CV						▪				▪				▪										▪																
HEATING COIL CONTROL VALVE	CV						▪					▪			▪										▪																
HUMIDIFIER ENABLE/DISABLE	ED							▪				▪			▪										▪																
HUMIDIFIER CONTROL	CI						▪					▪			▪										▪																
CONDENSATE PUMP ALARM	AX			▪											▪			▪													▪										
OUTDOOR AIR HANDLING UNIT (AHU 400)																																			●		●	●			
SUPPLY FAN START/STOP	SS							●				●							●																						
SUPPLY FAN STATUS	CR			●														●										●			●										
SUPPLY AIR TEMPERATURE	TS		●														●														●		●						50°F	80°F	
SPACE HUMIDITY	HS		●														●														●		●						35%	65%	
SPACE TEMPERATURE	TS		●														●														●		●						60°F	80°F	
FREEZSTAT ALARM	FZ			●														●													●										
FILTER ALARM	DP			●													●														●										
COOLING COIL CONTROL VALVE	CV						●					●													●																
HEATING COIL CONTROL VALVE	CV						●				●														●																
HUMIDIFIER ENABLE/DISABLE	ED							●				●																												
HUMIDIFIER CONTROL	CI						●					●													●																

REV	APPROVED DATE	DESCRIPTION	JCN	REDLINE DATE	APVD

DEPARTMENT OF TRANSPORTATION
FEDERAL AVIATION ADMINISTRATION
ATO - TECHNICAL OPERATIONS — WESTERN SERVICE AREA

ARTCC
MAJOR MECHANICAL MODERNIZATION

DDCS POINT FUNCTION SCHEDULE

DENVER — LONGMONT — CO

REVIEWED BY

SUBMITTED BY: PAUL TULENKO — PROJECT ENGINEER

APPROVED BY: CALLEN R. COLLINS — MGR: ENGINEERING - SEATTLE

DESIGNED: DH
DRAWN: JA
CHECKED:

ISSUED BY: ENGINEERING SERVICES ENROUTE/FSS

DATE
JCN: 1401893
DRAWING NO: ZDV-1401893-M812
REV

ISSUED FOR:

DRAWING PRODUCED ON WSA MICROSTATION SYSTEM

DO NOT SIGN

zdv-1401893-m812.dgn 6/27/2018 10:15:00 AM John CTR Allen
EDMS: zdv-1401893-m812.dgn

8 | 7 | 6 | 5 | 4 | 3 | 2 | 1

ABBREVIATIONS

A	A	AMPERE
	AC	ALTERNATING CURRENT
	ACP	ACCESS CONTROL PANEL
	AF	AMPERE FRAME
	AFCT	ABOVE FINISHED COUNTERTOP
	AFF	ABOVE FINISHED FLOOR
	AIC	AMPERE INTERRUPTING CAPACITY
	AMM	AMMETER
	ANN	ANNUNCIATOR
	AO	ANALOG OUTPUT
	APU	ALARM PROCESSING UNIT
	AT	AMPERE TRIP
	ATS	AUTOMATIC TRANSFER SWITCH
	AWG	AMERICAN WIRE GAUGE
	A/V	AUDIO/VISUAL
B	BAT CHGR	BATTERY CHARGER
	BC	BARE COPPER
	BPU	BREAKER PROGRAMMING UNIT
C	C	CONDUIT
	CB	CIRCUIT BREAKER
	CC	CENTRAL COMPUTER
	CCTV	CLOSED CIRCUIT TELEVISION
	CKT	CIRCUIT
	CLF	CURRENT LIMITING FUSE
	CO	CONDUIT ONLY
	COMM	COMMUNICATIONS
	COR	CONTRACTING OFFICER'S REPRESENTATIVE
	CPC	CRITICAL POWER CENTER
	CPU	CENTRAL PROCESSING UNIT
	CR	CARD READER
	CS	CONTROL SWITCH
	CT	CURRENT TRANSFORMER, CABLETRAY
D	DB	DIRECT BURIAL
	DC	DIRECT CURRENT
	DI	DIGITAL INPUT
	DISC	DISCONNECT
	DIST PNL	DISTRIBUTION PANEL
	DM	DEMAND METER
	DO	DIGITAL OUTPUT
	DPDT	DOUBLE POLE DOUBLE THROW
	DPST	DOUBLE POLE SINGLE THROW
	DT	DOUBLE THROW
	DWG(S)	DRAWING(S)
	DDCS	DIRECT DIGITAL CONTROL SYSTEM
E	ECP	ENGINE CONTROL PANEL
	EDAM	ELECTRICAL DATA ACQUISITION AND MONITORING
	EF	EXHAUST FAN
	EH	ELECTRIC HEATER ELECTRONIC HUMIDIFIER
	EHC	ELECTRIC HEATING COIL
	EHH	ELECTRICAL HANDHOLE
	EMERG	EMERGENCY
	EMH	ELECTRICAL MANHOLE
	EMT	ELECTRIC METALLIC TUBING
	ERMS	ENVIRONMENTAL REMOTE MONITORING SYSTEM
	ET	ELECTRIC HEAT TRACE
	EXP	EXPANSION ENCLOSURE
F	FA	FAN COOLED
	FACP	FIRE ALARM CONTROL PANEL
	FDR	FEEDER
	FLA	FULL LOAD AMPERES
	FLUOR	FLUORESCENT
	FO	FIBEROPTIC
	FOT	FIBER OPTIC TERMINAL
	FPU	FIELD PROGRAMMING UNIT
	FV	FULLVOLTAGE
G	GFI	GROUND FAULT INTERUPTER
	GFCI	GOVERNMENT FURNISHED CONTRACTOR INSTALLED
	GH	GUARDHOUSE
	GND	GROUND
H	HE	HEADEND
	HH	HAND HOLE
	HOA	HAND-OFF-AUTOMATIC
	HPS	HIGH PRESSURE SODIUM
	HZ	HERTZ
I	IC	INTERCOMMUNICATION, INTERCOM
	INCAND	INCANDESCENT
	ISMS	INTEGRATED SECURITY MANAGEMENT SYSTEM
J	J	JUNCTION
	JB	JUNCTION BOX
K	KA	KILOAMPERES
	KCMIL	THOUSAND CIRCULAR MILLS
	KV	KILOVOLT
	KVA	KILOVOLT AMPERES
	KVAR	KILOVOLT AMPERES - REACTIVE
	KW	KILOWATT
	KWH	KILOWATT HOUR
L	LA	LIGHTNING ARRESTER
	LOSP	LOCAL OPERATING STATUS PANEL
	LRA	LOCKED ROTOR AMPERE
	LTG	LIGHTING
	LV	LOW VOLTAGE
M	M	MOTOR
	MCB	MAIN CIRCUIT BREAKER
	MCC	MOTOR CONTROL CENTER
	MCP	MOTOR CIRCUIT PROTECTOR
	MDT	MAIN DISTRIBUTION TERMINAL
	MG	MOTOR GENERATOR
	MH	MANHOLE
	MLO	MAIN LUGS ONLY
	MP	MULTIPOINT
	MTD	MOUNTED
	MTS	MANUAL TRANSFER SWITCH
	MVA	MEGAVOLT AMPERE
N	N	NEUTRAL
	NEC	NATIONAL ELECTRICAL CODE
	NTS	NOTTOSCALE
O	OVHD	OVERHEAD
P	P	POLE
	PCMS	POWER CONTROL AND MONITORING SYSTEM
	PF	POWER FACTOR
	PH	PHASE
	PNL	PANELBOARD
	POS	POSITIVE OR POSITION
	PP	POWER POLE OR PATCH PANEL
	PS	POWER SUPPLY
	PTZ	CAMERA,PAN-TILT-ZOOM
	PVC	POLYVINYL CHLORIDE
R	REC	RECEPTACLE
	REF	REFERENCE
	RFI	RADIO FREQUENCY INTERFERENCE
	RGS	RIGID GALVANIZED STEEL
	RM	ROOM
S	SCC	SECURITY CONTROL CENTER
	SCP	SYSTEM CONTROL PANEL
	SIM	SIMILAR
	SLC	SIGNALING LINE CIRCUIT
	SP	SINGLEPOLE
	SRG	SIGNAL REFERENCE GRID
	S/S	START-STOP
	SW	SWITCH
	SWBD	SWITCHBOARD
	SWGR	SWITCHGEAR
T	T	TRANSFORMER
	TB	TERMINAL BOX OR TERMINAL BOARD
	TD	TIMEDELAY
	TELCOM	TELECOMMUNICATIONS
	TERM	TERMINAL
	THH	TELECOMMUNICATIONS HANDHOLE
	TIA	TELECOMMUNICATIONS INDUSTRY ASSOCIATION
	TMH	TELECOMMUNICATIONS MANHOLE
	TT	TELEPHONE TERMINAL
	TV	TELEVISION, CCTV CAMERA
	TVSS	TRANSIENT VOLTAGE SURGE SUPPRESSOR
	TYP	TYPICAL
U	UON	UNLESS OTHERWISE NOTED
V	V	VOLT, VOLTAGE
	VA	VOLT AMPERE
	VAV	VARIABLE AIR VOLUME TERMINAL
	VFD	VARIABLE FREQUENCY DRIVE
W	W	WATT
	WM	WIREMOLD
	WP	WEATHERPROOF
X	X	AUXILIARY RELAY
	XFR	TRANSFER
	XFMR	TRANSFORMER
	XMTR	TRANSMITTER
	XDCR	TRANSDUCER
Y	Y	WYE
	Y-Δ	WYE-DELTA
Z	Z	IMPEDANCE

ELECTRICAL PLAN SYMBOLS

- LIGHT LINE WEIGHT INDICATES EXISTING WORK
- HEAVY LINE WEIGHT INDICATES NEW WORK
- CROSS HATCHING OVERLAPPING DEVICES AND EQUIPMENT INDICATES DEMOLITION (UON)
- BRANCH CIRCUIT- EXPOSED, 3/4" C, WITH 3#12 WIRES PLUS 1#12 GROUND, UON
- SAME AS BRANCH CIRCUIT - EXCEPT CONCEALED IN CEILING, UNDER GROUND OR WALL SPACE
- DP.1 — HOME RUN TO PANEL DP, CIRCUIT 1
- CONDUIT UP
- CONDUIT DOWN
- WP 30 — DISCONNECT SWITCH, NON-FUSIBLE, +48" AFF (UON) 30A FRAME SIZE "WP" WHERE USED, INDICATES WEATHERPROOF
- WP 30/5 — DISCONNECT SWITCH, FUSIBLE, +48" AFF (UON) 30A FRAME SIZE, 5A FUSE SIZE "WP" WHERE USED, INDICATES WEATHERPROOF
- (1) — COMBINATION MOTOR STARTER WITH DISCONNECT SWITCH UON (1) NEMA STARTER SIZE, 48" AFF (UON)
- (1) — COMBINATION MOTOR STARTER WITH HAND-OFF-AUTO (HOA) UON (1) NEMA STARTER SIZE
- M — MOTOR CONNECTION
- 2'X4' FLUORESCENT FIXTURE
- 1'X4' FLUORESCENT FIXTURE
- EMERGENCY FLUORESCENT FIXTURE, BATTERY BACKUP
- OPEN INDUSTRIAL FLUORESCENT FIXTURE
- EMERGENCY OPEN INDUSTRIAL FLUORESCENT FIXTURE, BATTERY BACKUP
- CEILING MOUNTED, FLUORESCENT OR INCANDESCENT FIXTURE
- EXISTING EXTERIOR LIGHT FIXTURE
- NEW EXTERIOR LIGHT FIXTURE
- LIGHTNING/GROUNDING CONDUCTOR
- DOWN CONDUCTOR
- AIR TERMINAL
- WALL MOUNTED EXIT LIGHTING FIXTURE, +84" AFF. SHADED SECTION(S) INDICATE FACE(S) WITH DIRECTIONAL ARROWS AS SHOWN ON PLANS
- S WP — DUPLEX RECEPTACLE, NEMA 5-20R, 20A, 125V, 2P, 3W, +18" AFF UON, FOR RECEPTACLE ABOVE COUNTER TOP, INSTALL AT 8" AFCT. "S" WHERE USED, INDICATES SURFACE MOUNTED "WP" WHERE USED, INDICATES WEATHERPROOF
- WM — QUADRUPLEX RECEPTACLE, NEMA 5-20R, 20A, 125V, 2P, 3W, 18" AFF, UON "WM" WHERE USED, INDICATES WIREMOLD
- GFI DUPLEX RECEPTACLE, NEMA 5-20R, 20A, 125V, 2P, 3W, 18" AFF UON. FOR RECEPTACLE ABOVE SINK OR COUNTER TOP, INSTALL AT 8" AFCT
- J WP — JUNCTION BOX, WALL MOUNTED AT HEIGHT INDICATED WITH BLANK COVER PLATE (UON), WP = WEATHERPROOF
- J (1) — JUNCTION BOX WITH BLANK COVER PLATE (UON) (1) = SIZE 6"x6"x4" (2) = SIZE 8"x8"x6"
- $b — SINGLE POLE SWITCH OUTLET. LOWERCASE SUBSCRIPT, WHEN USED, INDICATES SWITCH LEG, 48" AFF (UON)
- $D — DIMMER SWITCH, +48" AFF (UON)
- $OS — WALL MOUNTED OCCUPANCY SENSOR, 48" AFF (UON)
- $3 — THREE WAY SWITCH, +48" AFF (UON)
- $T — ADJUSTABLE TIMER SWITCH, +48" AFF (UON)
- $M — MANUAL MOTOR STARTER SWITCH, 208V, 1PH, 30A, +18" AFF (UON)
- SURFACE MOUNTED 480V OR 480Y/277 VOLT PANEL
- SURFACE MOUNTED 208V OR 208Y/120 VOLT PANEL
- T — TRANSFORMER
- S — WALL MOUNTED TELEPHONE OUTLET "S", WHERE USED, INDICATES SURFACE MOUNTED
- S — WALL MOUNTED DATA OUTLET "S", WHERE USED, INDICATES SURFACE MOUNTED
- WALL MOUNTED TELEPHONE AND DATA OUTLET
- OS — CEILING MOUNTED OCCUPANCY SENSOR

ONE LINE, SCHEMATIC DIAGRAM SYMBOLS

- V — VARIABLE FREQUENCY DRIVE
- V — VARIABLE FREQUENCY DRIVE WITH DISCONNECT SWITCH
- HEAVY LINE WEIGHT INDICATES NEW WORK
- 100AF / 60AT — MOLDED CASE THERMAL MAGNETIC CIRCUIT BREAKER, 100A, FRAME AND 60A, TRIP
  MCP : MOTOR CIRCUIT PROTECTOR, PART OF A COMBINATION STARTER.

GENERAL NOTES

1. PRACTICE EXTREME CAUTION WHEN WORKING ON BUILDING SERVICE, ESSENTIAL AND CRITICAL POWER SYSTEMS. THIS FACILITY IS A 24 HOUR/DAY, 7 DAYS/WEEK AIR ROUTE TRAFFIC CONTROL CENTER FACILITY (ARTCC) AND AUTHORIZED ELECTRICAL OUTAGES MAY CAUSE ACCIDENTS AND/OR LOSS OF LIFE.
2. UNSCHEDULED INTERRUPTIONS ARE NOT PERMITTED. WORK REQUIRING PERMANENT, TEMPORARY OR PARTIAL OUTAGES SHALL BE SCHEDULED AND APPROVED IN WRITING BY THE COR AT LEAST 15 CALENDAR DAYS IN ADVANCE OF PERFORMING WORK.
3. COORDINATE ELECTRICAL DEMOLITION WORK WITH WORK SHOWN ON ARCHITECTURAL AND MECHANICAL DRAWINGS.
4. ONLY FAA SPECIALISTS ARE PERMITTED TO OPERATE CIRCUIT BREAKERS. CONTRACTOR SHALL REQUEST PERMISSION OF THE COR AT LEAST 15 CALENDAR DAYS IN ADVANCE AND IN WRITING FOR EACH CASE OF BREAKER OPERATION. CONTRACTOR SHALL NOT OPEN (DE-ENERGIZE) OR CLOSE (ENERGIZE) ANY CIRCUIT BREAKER AT ANY TIME. COORDINATE DE-ENERGIZING, AND ENERGIZING, OF ANY PANELBOARD FOR CIRCUIT BREAKER REPLACEMENT WITH COR.
5. FIRESTOP CONDUIT PENETRATIONS THROUGH FLOORS AND FIRE RATED WALLS. MATERIALS & METHODS EMPLOYED IN FIRESTOPPING SHALL BE IN ACCORDANCE WITH UL STANDARDS. LEAVE NO OPENINGS IN FIRE RATED ASSEMBLIES OPEN OVERNIGHT, OR PAST THE WORK SHIFT, TEMPORARILY FIRE STOP THESE OPENINGS IF NECESSARY.
6. ELECTRICAL EQUIPMENT AND LIGHTING FIXTURE SUPPORT SYSTEMS SHALL BE INSTALLED TO WITHSTAND IBC SEISMIC DESIGN CATEGORY "D".
7. WHERE CONDUIT IS INDICATED TO BE REUSED, REMOVE EXISTING WIRING AND/OR ABANDONED WIRING INSIDE CONDUIT WITH INDUSTRY STANDARD METHODS PRIOR TO PULLING NEW WIRING. SECURELY CAP EACH CONDUIT, IF CONDUIT IS TO REMAIN UNFILLED FOR MORE THAN ONE SHIFT.
8. VERIFY EXISTING CONDITIONS BEFORE COMMENCING ANY DEMOLITION OR CONSTRUCTION. ELECTRICAL DEMOLITION REQUIRES THE IDENTIFICATION OF THE CIRCUITS, THEN THE REMOVAL OF WIRING, CONDUIT, AND OTHER RELATED EQUIPMENT BACK TO THE RESPECTIVE SOURCE. MAINTAIN CONTINUITY OF EXISTING TO REMAIN CIRCUITS WHETHER INSIDE OR OUTSIDE OF THE DEMOLITION AREA. CONCEALED CONDUITS THAT ARE INACCESSIBLE MAY BE ABANDONED IN PLACE ONLY AFTER ALL CONDUCTORS ARE FULLY REMOVED, EACH END IS CAPPED, AND EACH END IS IDENTIFIED WITH THE OPPOSITE END'S TERMINATION POINT.
9. SEE MECHANICAL DEMOLITION DRAWINGS FOR EXTENT OF DEMOLITION AND RELOCATION OF MECHANICAL EQUIPMENT. ELECTRICAL CONTRACTOR SHALL DISCONNECT AND REMOVE ELECTRICAL CONNECTIONS TO DEMOLISHED MECHANICAL EQUIPMENT BACK TO ITS POWER SOURCE IN ACCORDANCE WITH APPROVED CONSTRUCTION SCHEDULE. EXTEND EXISTING CIRCUITS TO NEW EQUIPMENT LOCATIONS AS REQUIRED AND REUSE OR RELOCATE DISCONNECTING MEANS IN ACCORDANCE WITH THE NEC. COORDINATE SCHEDULING OF DISCONNECTION OF MECHANICAL EQUIPMENT WITH MECHANICAL CONTRACTOR.
10. WHERE BRANCH CIRCUITS ARE DEMOLISHED FROM PANELBOARDS NOT SHOWN IN CONTRACT DRAWINGS, CIRCUIT BREAKERS SHALL BE SET TO "OFF" POSITION AND PANELBOARD DIRECTORY SHALL BE MODIFIED TO READ "SPARE".
11. FOR EACH CONDUIT THAT IS TO BE LEFT IN PLACE FOR FUTURE USE, INSTALL A PULLWIRE AND SECURELY CAP EACH END. PERMANENTLY MARK THE END OF EACH CONDUIT WITH THE LOCATION OF THE OPPOSITE END'S TERMINATION POINT.
12. WHEN CONDUITS AND CONDUCTORS ARE TO REMAIN IN PLACE AND ARE TO BE REUSED, CONTRACTOR SHALL ADEQUATELY PROTECT CONDUITS AND CONDUCTORS FROM ALL PHYSICAL DAMAGE, INCLUDING ANY OUTDOOR EXPOSURE, AS APPLICABLE. WHERE NEEDED, INSTALL APPROPRIATE TEMPORARY JUNCTION BOXES AS DIRECTED BY THE COR.
13. ALL ELECTRICAL CONDUCTORS THAT ARE SCHEDULED TO BE REUSED, SHALL BE MEGGERED BEFORE BEING DISTURBED, OR DISCONNECTED FROM THEIR TERMINALS, OR SPLICES. THE MEGOHMMETER READINGS SHALL BE TAKEN, RECORDED, AND SUBMITTED AS PER SPECIFICATIONS. ALL TESTING, OF THOSE CONDUCTORS TO BE REUSED, SHALL BE WITNESSED BY THE COR, WITHOUT EXCEPTION. THE COR SHALL SIGN THE FIELD REPORT OF THESE MEGOHMMETER READINGS.

REV	APPROVED DATE	DESCRIPTION	JCN	REDLINE DATE	APVD

DEPARTMENT OF TRANSPORTATION
FEDERAL AVIATION ADMINISTRATION
ATO - TECHNICAL OPERATIONS **WESTERN SERVICE AREA**

ARTCC

MAJOR MECHANICAL MODERNIZATION
ELECTRICAL ABBREVIATIONS,
SYMBOLS AND GENERAL NOTES

DENVER LONGMONT CO

REVIEWED BY	SUBMITTED BY	APPROVED BY
	PAUL TULENKO	CALLEN R. COLLINS
	PROJECT ENGINEER	MGR: ENGINEERING - SEATTLE
	DESIGNED TL	DATE / JCN 1401893
	DRAWN JA	DRAWING NO ZDV-1401893-E001 / REV
	CHECKED	ISSUED BY ENGINEERING SERVICES ENROUTE/FSS

DO NOT SIGN DO NOT SIGN DO NOT SIGN DO NOT SIGN DO NOT SIGN DO NOT SIGN DO NOT SIGN DO NOT SIGN DO NOT SIGN

ISSUED FOR:

EDM: zdv-1401893-e001.dgn
zdv-1401893-e001.dgn 6/27/2018 10:57:08 AM John CTR Allen

DRAWING PRODUCED ON WSA MICROSTATION SYSTEM

B8 / E101 BASEMENT ROOM B115 LIGHTING PLAN - DEMOLITION

SCALE: 1/8" = 1'-0"

8' 0 8' 16'

SCALE: 1/8" = 1'-0"

GENERAL NOTES

A. REFER TO SPECIFICATION AND GENERAL NOTES ABOUT DEMOLITION INCLUDING ASBESTOS, LEAD AND PCB ABATEMENT ON GENERAL AND ARCHITECTURAL DRAWINGS.

B. BRANCH CIRCUIT CONDUIT RUNS ARE DIAGRAMMATIC, CONTRACTOR TO FIELD VERIFY BRANCH CIRCUITS PER PANELBOARD SCHEDULE AND THIS DRAWING.

C. MAINTAIN CONTINUITY TO AREAS NOT AFFECTED BY DEMOLITION OR PROVIDE TEMPORARY POWER IN AREAS WHERE THE COR/RE DETERMINES THAT IS NECESSARY.

SHEET NOTES

1. DEMOLISH EXISTING PENDANT LIGHT FIXTURES. SALVAGE EXISTING PENDANTS FOR REUSE DURING REPLACEMENT LIGHT INSTALLATION.
2. RETAIN EXISTING SWITCHES, CONDUIT AND CONDUCTORS TO THE GREATEST EXTENT PRACTICABLE.

KEY PLAN:

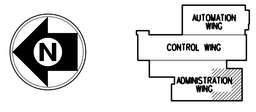

REV	APPROVED DATE	DESCRIPTION	JCN	REDLINE DATE	APVD

DEPARTMENT OF TRANSPORTATION
FEDERAL AVIATION ADMINISTRATION
ATO - TECHNICAL OPERATIONS WESTERN SERVICE AREA

ARTCC

MAJOR MECHANICAL MODERNIZATION
BASEMENT ROOM B115
LIGHTING PLAN - DEMOLITION

DENVER LONGMONT CO

REVIEWED BY

SUBMITTED BY: PAUL TULENKO
APPROVED BY: CALLEN R. COLLINS
PROJECT ENGINEER
MGR: ENGINEERING - SEATTLE
DESIGNED TL
DRAWN JA
CHECKED
ISSUED BY: ENGINEERING SERVICES ENROUTE/FSS
DATE
JCN 1401893
DRAWING NO ZDV-1401893-E101
REV

ISSUED FOR:

DRAWING PRODUCED ON WSA MICROSTATION SYSTEM

EDM: zdv-1401893-e01.dgn

rtc-1401893-e101.dgn
6/27/2018 10:58:03 AM John CTR Allen

SHEET NOTES:

1. DEMOLISH LIGHT FIXTURES AND CONDUCTORS. SALVAGE EXISTING HANGERS, PENDANTS, RACEWAY, CONDUITS, SWITCHES, AND UNISTRUT, ETC. FOR REUSE DURING REPLACEMENT LIGHT INSTALLATION.
2. DEMOLISH LUMINAIRES, RACEWAY, CONDUITS, CONDUCTORS, ETC. AS MAY BE ATTACHED TO COOLING TOWERS AND FRAME.
3. DEMOLISH EMERGENCY LIGHTING CIRCUIT. EXISTING EMERGENCY LIGHTS ARE LOCAL BATTERY OPERATED AND ARE NOT TIED TO EMERGENCY FACILITY SYSTEM.

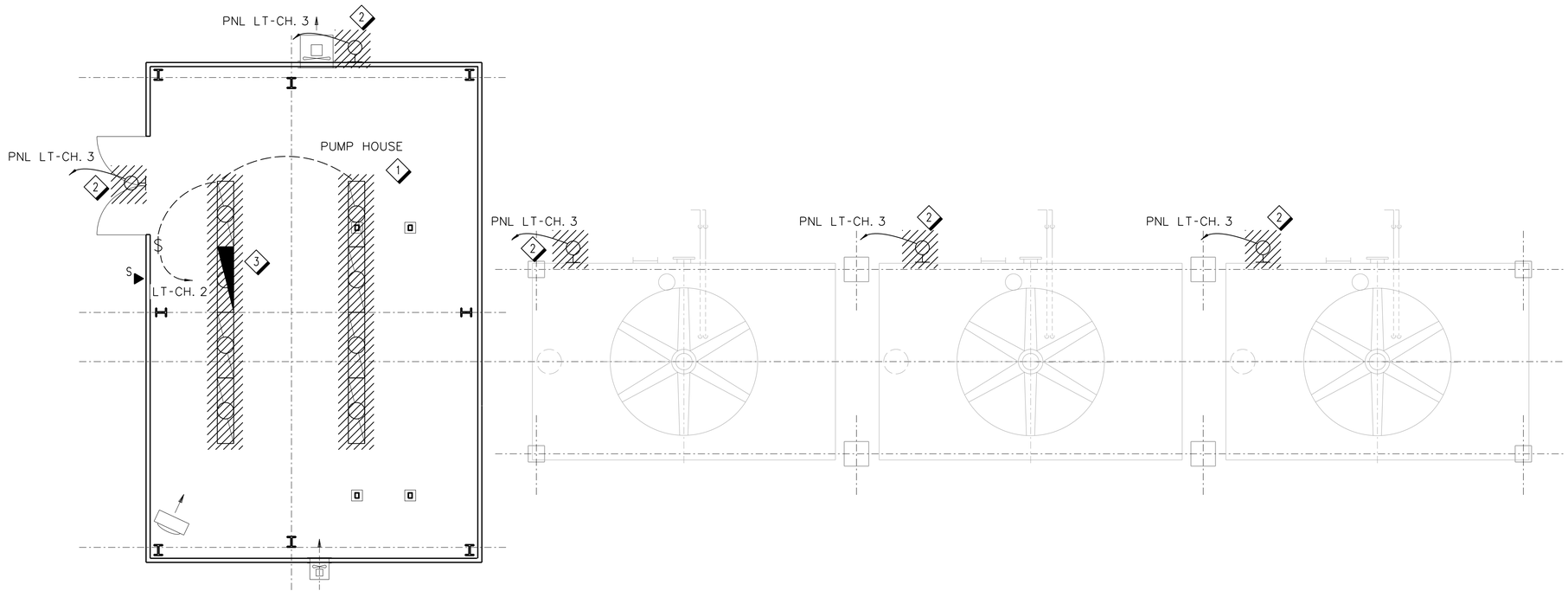

C7 / E102 COOLING TOWER AND PUMP HOUSE LIGHTING PLAN - DEMOLITION
SCALE: 1/4" = 1'-0"

4' 0 4' 8'
SCALE: 1/4" = 1'-0"

REV	APPROVED DATE	DESCRIPTION	JCN	REDLINE DATE	APVD

DEPARTMENT OF TRANSPORTATION
FEDERAL AVIATION ADMINISTRATION
ATO - TECHNICAL OPERATIONS WESTERN SERVICE AREA

ARTCC

MAJOR MECHANICAL MODERNIZATION
COOLING TOWER AND PUMP HOUSE
LIGHTING PLAN - DEMOLITION

DENVER LONGMONT CO

REVIEWED BY

SUBMITTED BY: PAUL TULENKO — PROJECT ENGINEER
APPROVED BY: CALLEN R. COLLINS — MGR: ENGINEERING - SEATTLE

DO NOT SIGN

DESIGNED TL
DRAWN JA
CHECKED

ISSUED BY: ENGINEERING SERVICES ENROUTE/FSS

DATE
JCN 1401893
DRAWING NO ZDV-1401893-E102
REV

ISSUED FOR:

DRAWING PRODUCED ON WSA MICROSTATION SYSTEM

zdv-1401893-e102.dgn 6/27/2018 10:58:34 AM John CTR Allen

EDM: zdv-1401893-e102.dgn

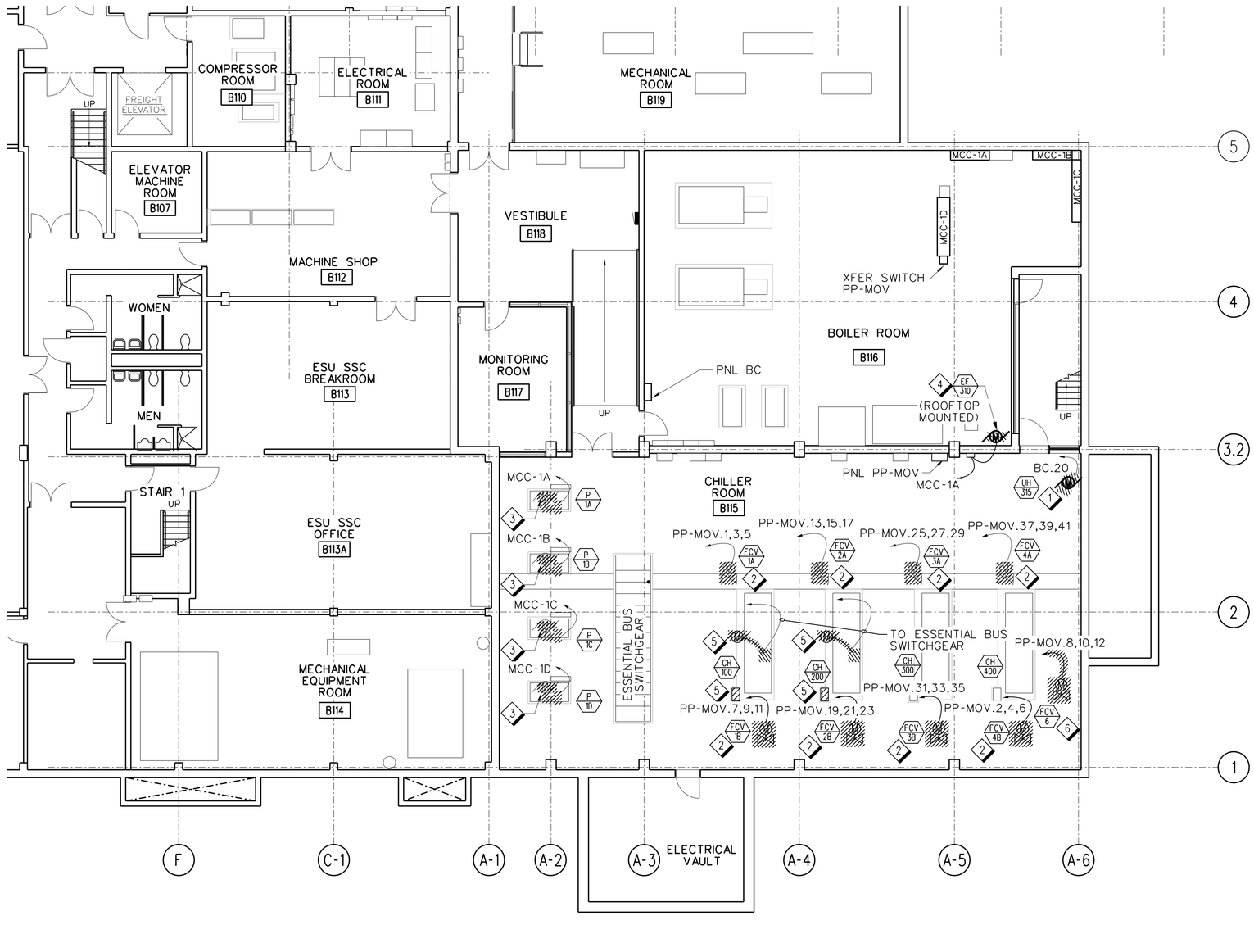

B8 / E103 BASEMENT ROOM B115 POWER PLAN - DEMOLITION

SCALE: 1/8" = 1'-0"

GENERAL NOTES

A. REFER TO SPECIFICATION AND GENERAL NOTES ABOUT DEMOLITION INCLUDING ASBESTOS, LEAD AND PCB ABATEMENT ON GENERAL AND ARCHITECTURAL DRAWINGS.

B. BRANCH CIRCUIT CONDUIT RUNS ARE DIAGRAMMATIC, CONTRACTOR TO FIELD VERIFY BRANCH CIRCUITS PER PANELBOARD SCHEDULE AND THIS DRAWING.

C. MAINTAIN CONTINUITY TO AREAS NOT AFFECTED BY DEMOLITION OR PROVIDE TEMPORARY POWER IN AREAS WHERE THE COTR/RE DETERMINES THAT IS NECESSARY.

SHEET NOTES

1. DEMOLISH UNIT HEATER (UH). EXISTING CONDUIT AND WIRING TO REMAIN FOR RECONNECTION TO REPLACEMENT UNIT.
2. DEMOLISH FLOW CONTROL VALVE (FCV). EXISTING CONDUIT AND WIRING TO REMAIN FOR RECONNECTION TO REPLACEMENT UNIT.
3. DEMOLISH MOTOR AND DISCONNECT SWITCH. RETAIN MOUNTING STAND FOR POSSIBLE REUSE. DEMOLISH RACEWAY AND CONDUCTORS FROM DISCONNECT TO MOTOR.
4. DEMOLISH ROOFTOP MOUNTED EXHAUST FAN (EF-310) AND ASSOCIATED DISCONNECT SWITCH. EXISTING CONDUIT AND WIRING TO REMAIN FOR RECONNECTION TO REPLACEMENT UNIT.
5. DEMOLISH CHILLER, STARTER, ASSOCIATED CONTROLS, EXISTING CONDUIT AND WIRING FROM ESSENTIAL BUS TO MOTOR.
6. DEMOLISH FLOW CONTROL VALVE (FCV), CONDUIT AND WIRING BACK TO SOURCE.

KEY PLAN:

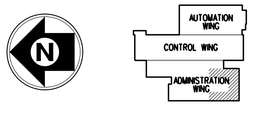

REV	APPROVED DATE	DESCRIPTION	JCN	REDLINE DATE	APVD

DEPARTMENT OF TRANSPORTATION
FEDERAL AVIATION ADMINISTRATION
ATO - TECHNICAL OPERATIONS — WESTERN SERVICE AREA

ARTCC

MAJOR MECHANICAL MODERNIZATION
BASEMENT ROOM B115
POWER PLAN - DEMOLITION

DENVER — LONGMONT — CO

REVIEWED BY

SUBMITTED BY: PAUL TULENKO — PROJECT ENGINEER

APPROVED BY: CALLEN R. COLLINS — MGR: ENGINEERING - SEATTLE

DO NOT SIGN

DESIGNED: TL
DRAWN: JA
CHECKED

ISSUED BY: ENGINEERING SERVICES ENROUTE/FSS

DATE
JCN: 1401893
DRAWING NO: ZDV-1401893-E103
REV

ISSUED FOR:

rpt-1401893-e103.dgn 7/10/2018 9:22:24 PM John CTR Allen

EDM: zdv-1401893-e103.dgn

DRAWING PRODUCED ON WSA MICROSTATION SYSTEM

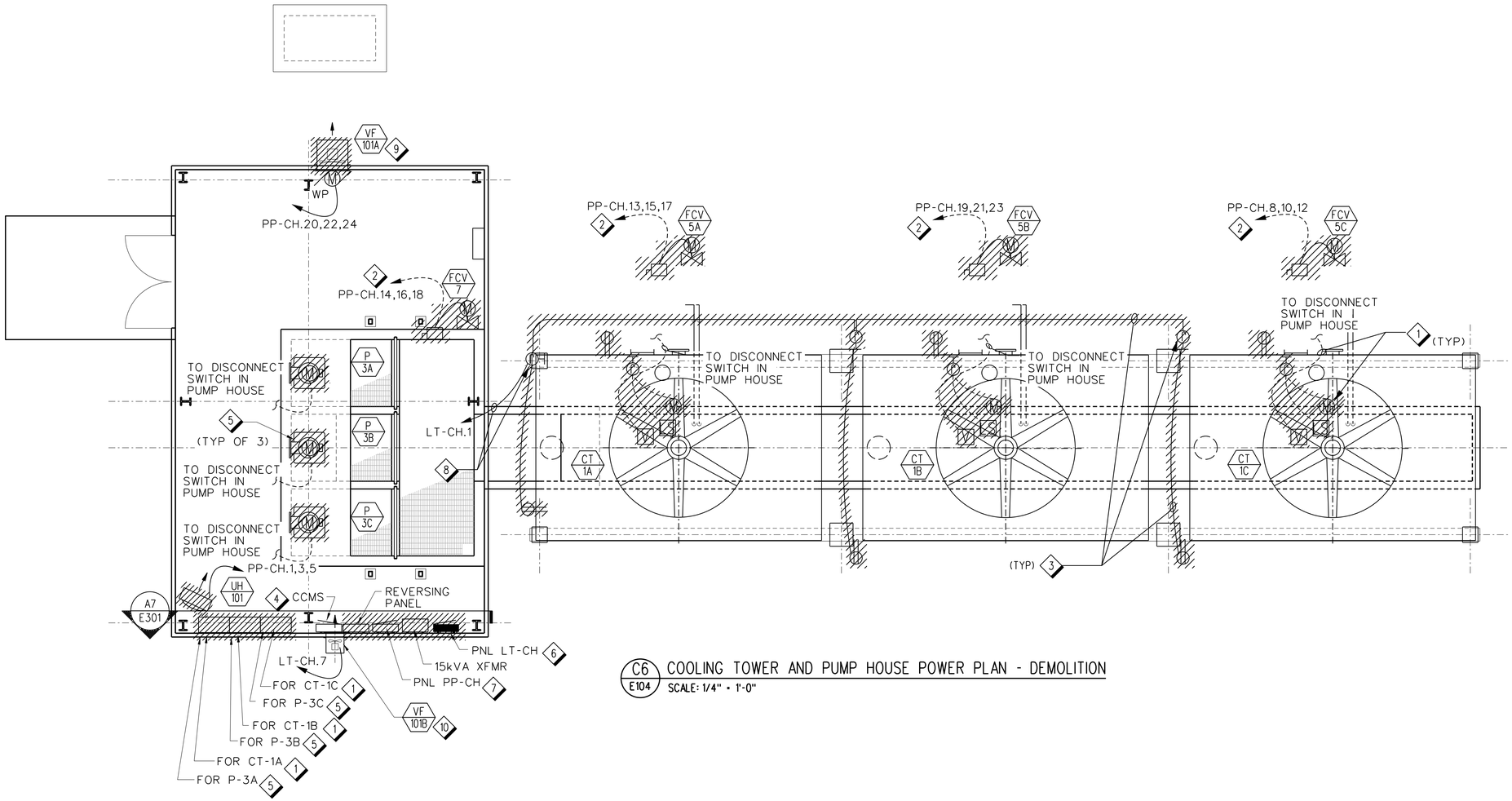

C6 / E104 COOLING TOWER AND PUMP HOUSE POWER PLAN - DEMOLITION

SCALE: 1/4" = 1'-0"

GENERAL NOTES

A. REFER TO SPECIFICATION AND GENERAL NOTES ABOUT DEMOLITION INCLUDING ASBESTOS, LEAD AND PCB ABATEMENT ON GENERAL AND ARCHITECTURAL DRAWINGS.

B. BRANCH CIRCUIT CONDUIT RUNS ARE DIAGRAMMATIC, CONTRACTOR TO FIELD VERIFY BRANCH CIRCUITS PER PANELBOARD SCHEDULE AND THIS DRAWING.

C. MAINTAIN CONTINUITY TO AREAS NOT AFFECTED BY DEMOLITION OR PROVIDE TEMPORARY POWER IN AREAS WHERE THE COR/RE DETERMINES THAT IT IS REQUIRED. ELECTRICAL WORK SHALL MATCH MECHANICAL PHASING PLAN AS REQUIRED.

D. REFER TO MECHANICAL PLAN FOR EXACT EQUIPMENT DEMOLITION.

E. REFER TO SHEET E301 FOR ADDITIONAL INFORMATION.

SHEET NOTES

1. DEMOLISH COOLING TOWER AND ASSOCIATED DISCONNECT SWITCH. DEMOLISH EXISTING EXPOSED CONDUIT BACK TO STUB UP. DEMOLISH EXISTING WIRING BACK TO DISCONNECT SWITCH IN PUMP HOUSE. EXISTING UNDERGROUND CONDUIT TO REMAIN FOR NEW WORK.
2. DEMOLISH FLOW CONTROL VALVE (FCV) AND ASSOCIATED DISCONNECT SWITCH. EXISTING UNDERGROUND CONDUIT AND WIRING TO REMAIN FOR RECONNECTION TO REPLACEMENT UNIT.
3. PULL BOX TO BE DEMOLISHED. DEMOLISH ASSOCIATED LOADS (LIGHT AND RECEPTACLES), EXPOSED CONDUITS AND ALL WIRING BACK TO FIRST IN LINE PULL BOX TO REMAIN.
4. RETAIN CCMS CONTROL PANEL.
5. DEMOLISH COOLING TOWER PUMP. RETAIN ASSOCIATED DISCONNECT SWITCH. EXISTING UNDERGROUND CONDUIT AND WIRING TO REMAIN FOR RECONNECTION.
6. DEMOLISH LIGHTING PANEL LT-CH. BRANCH CIRCUIT CONDUCTORS AND CONDUIT TO REMAIN FOR REUSE.
7. DEMOLISH POWER PANEL PP-CH. BRANCH CIRCUIT CONDUCTORS AND CONDUIT TO REMAIN FOR REUSE.
8. DEMOLISH ALL BRANCH CIRCUITS BACK TO SOURCE.
9. DEMOLISH EXISTING EXHAUST FAN VF-101A AND CONDUCTORS. CONDUIT TO REMAIN FOR REUSE.
10. DEMOLISH EXISTING SUPPLY FAN VF-101B AND CONDUCTORS. CONDUIT TO REMAIN FOR REUSE.

N

4' 0 4' 8'

SCALE: 1/4" = 1'-0"

REV	APPROVED DATE	DESCRIPTION	JCN	REDLINE DATE	APVD

DEPARTMENT OF TRANSPORTATION
FEDERAL AVIATION ADMINISTRATION
ATO - TECHNICAL OPERATIONS — WESTERN SERVICE AREA

ARTCC

MAJOR MECHANICAL MODERNIZATION
COOLING TOWER AND PUMP HOUSE
POWER PLAN – DEMOLITION

DENVER — LONGMONT — CO

REVIEWED BY

SUBMITTED BY: PAUL TULENKO — PROJECT ENGINEER

APPROVED BY: CALLEN R. COLLINS — MGR: ENGINEERING - SEATTLE

DO NOT SIGN

DESIGNED: TL
DRAWN: JA
CHECKED:

ISSUED BY: ENGINEERING SERVICES ENROUTE/FSS

DATE
JCN: 1401893
DRAWING NO: ZDV-1401893-E104
REV

ISSUED FOR:

DRAWING PRODUCED ON WSA MICROSTATION SYSTEM

rdp-1401893-e104.dgn 6/27/2018 10:59:40 AM John CTR Allen

EDM: zdx-1401893-e104.dgn

SHEET NOTES:

1. RETAIN EXISTING EARTH ELECTRODE CONDUCTOR STUB-UPS FOR REUSE.
2. DEMOLISH LIGHTNING PROTECTION AND BONDING ON EXISTING STAIRWAY AND PLATFORM.
3. EXCAVATE AND DEMOLISH EARTH ELECTRODE CONDUCTOR STUB-UPS TO THEIR CONNECTION TO THE EARTH CONDUCTOR (COUNTERPOISE).
4. RELOCATE DOWN CONDUCTORS TO EAST AND WEST EXTERIOR WALLS.

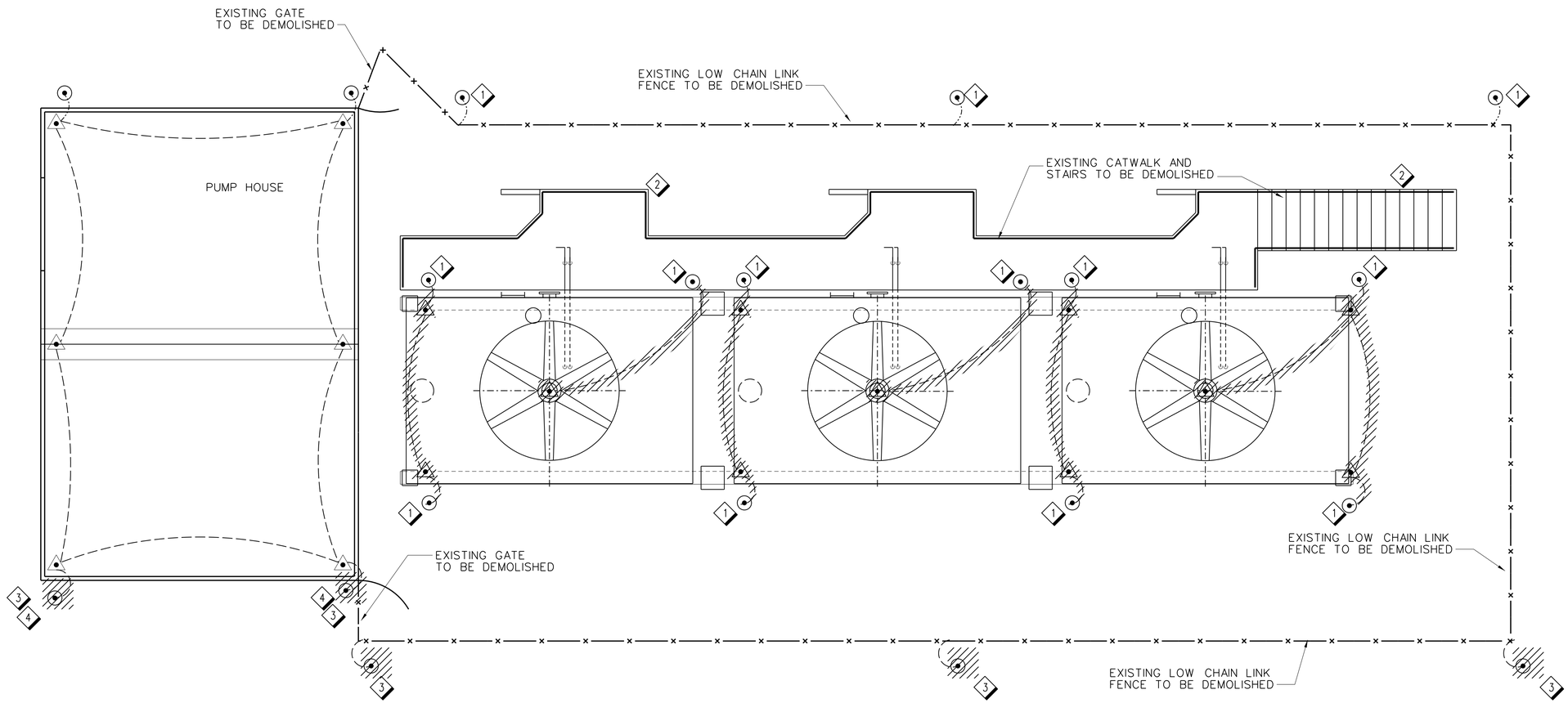

C7 / E105 COOLING TOWER AND PUMP HOUSE LIGHTNING PROTECTION PLAN - DEMOLITION
SCALE: 1/4" = 1'-0"

4' 0 4' 8'
SCALE: 1/4" = 1'-0"

REV	APPROVED DATE	DESCRIPTION	JCN	REDLINE DATE	APVD

DEPARTMENT OF TRANSPORTATION
FEDERAL AVIATION ADMINISTRATION
ATO - TECHNICAL OPERATIONS WESTERN SERVICE AREA

ARTCC

MAJOR MECHANICAL MODERNIZATION
COOLING TOWER AND PUMP HOUSE
LIGHTNING PROTECTION PLAN - DEMOLITION

DENVER LONGMONT CO

REVIEWED BY
SUBMITTED BY: PAUL TULENKO — PROJECT ENGINEER
APPROVED BY: CALLEN R. COLLINS — MGR: ENGINEERING - SEATTLE
DO NOT SIGN

DESIGNED TL
DRAWN JA
CHECKED

ISSUED BY: ENGINEERING SERVICES ENROUTE/FSS

DATE
JCN 1401893
DRAWING NO ZDV-1401893-E105
REV

ISSUED FOR:

rb-1401893-e105.dgn 6/27/2018 11:00:15 AM John CTR Allen

EDM: zdv-1401893-e105.dgn

DRAWING PRODUCED ON WSA MICROSTATION SYSTEM

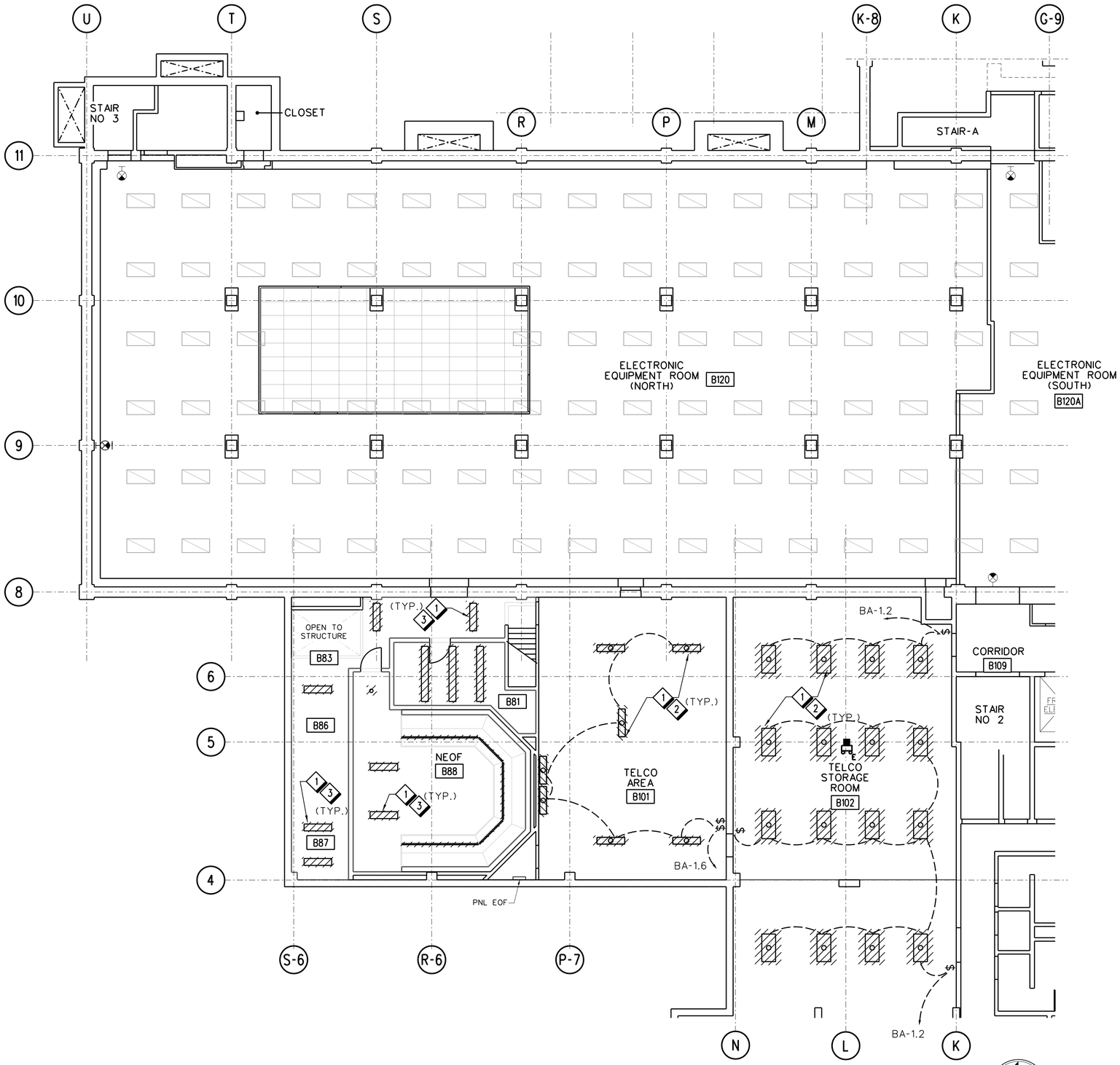

A8 / E111 BASEMENT ROOM B88/B101/B102 LIGHTING PLAN - DEMOLITION

SCALE: 1/8" = 1'-0"

8' 0 8' 16'
SCALE: 1/8" = 1'-0"

GENERAL NOTES

A. REFER TO SPECIFICATION AND GENERAL NOTES ABOUT DEMOLITION INCLUDING ASBESTOS, LEAD AND PCB ABATEMENT ON GENERAL AND ARCHITECTURAL DRAWINGS.

B. MAINTAIN CONTINUITY TO AREAS NOT AFFECTED BY DEMOLITION OR PROVIDE TEMPORARY POWER PER OSHA AND ALL APPLICABLE LIFE SAFETY CODES.

SHEET NOTES

1. FLUORESCENT LIGHTING FIXTURES HAVE BALLAST WHICH MAY CONTAIN PCB MATERIAL. REMOVE EACH BALLAST FROM EACH FIXTURE AND DISPOSE OF BALLAST IN ACCORDANCE WITH FAA REQUIREMENTS. FLUORESCENT LAMPS SHALL BE DISPOSED OF AS RCRA WASTE.
2. DEMOLISH LIGHTING FIXTURES, ASSOCIATED LIGHTING SWITCHES, AND WIRING BACK TO SOURCE (PNL BA-1).
3. DEMOLISH LIGHTING FIXTURES, ASSOCIATED LIGHTING SWITCHES, AND WIRING BACK TO SOURCE (PNL EOF).

KEY PLAN:

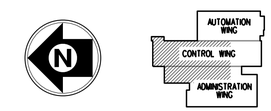

REV	APPROVED DATE	DESCRIPTION	JCN	REDLINE DATE	APVD

DEPARTMENT OF TRANSPORTATION
FEDERAL AVIATION ADMINISTRATION
ATO - TECHNICAL OPERATIONS WESTERN SERVICE AREA

ARTCC

MAJOR MECHANICAL MODERNIZATION BASEMENT ROOM B88/B101/B102 LIGHTING PLAN - DEMOLITION

DENVER LONGMONT CO

REVIEWED BY

SUBMITTED BY: PAUL TULENKO — PROJECT ENGINEER

APPROVED BY: CALLEN R. COLLINS — MGR: ENGINEERING - SEATTLE

DO NOT SIGN

DESIGNED YM
DRAWN JA
CHECKED

ISSUED BY: ENGINEERING SERVICES ENROUTE/FSS

DATE
JCN 1401893
DRAWING NO ZDV-1401893-E111
REV

ISSUED FOR:

zdv-1401893-e111.dgn 6/27/2018 11:04:36 AM John C?R Allen

EDM: zdv-1401893-e111.dgn

DRAWING PRODUCED ON WSA MICROSTATION SYSTEM

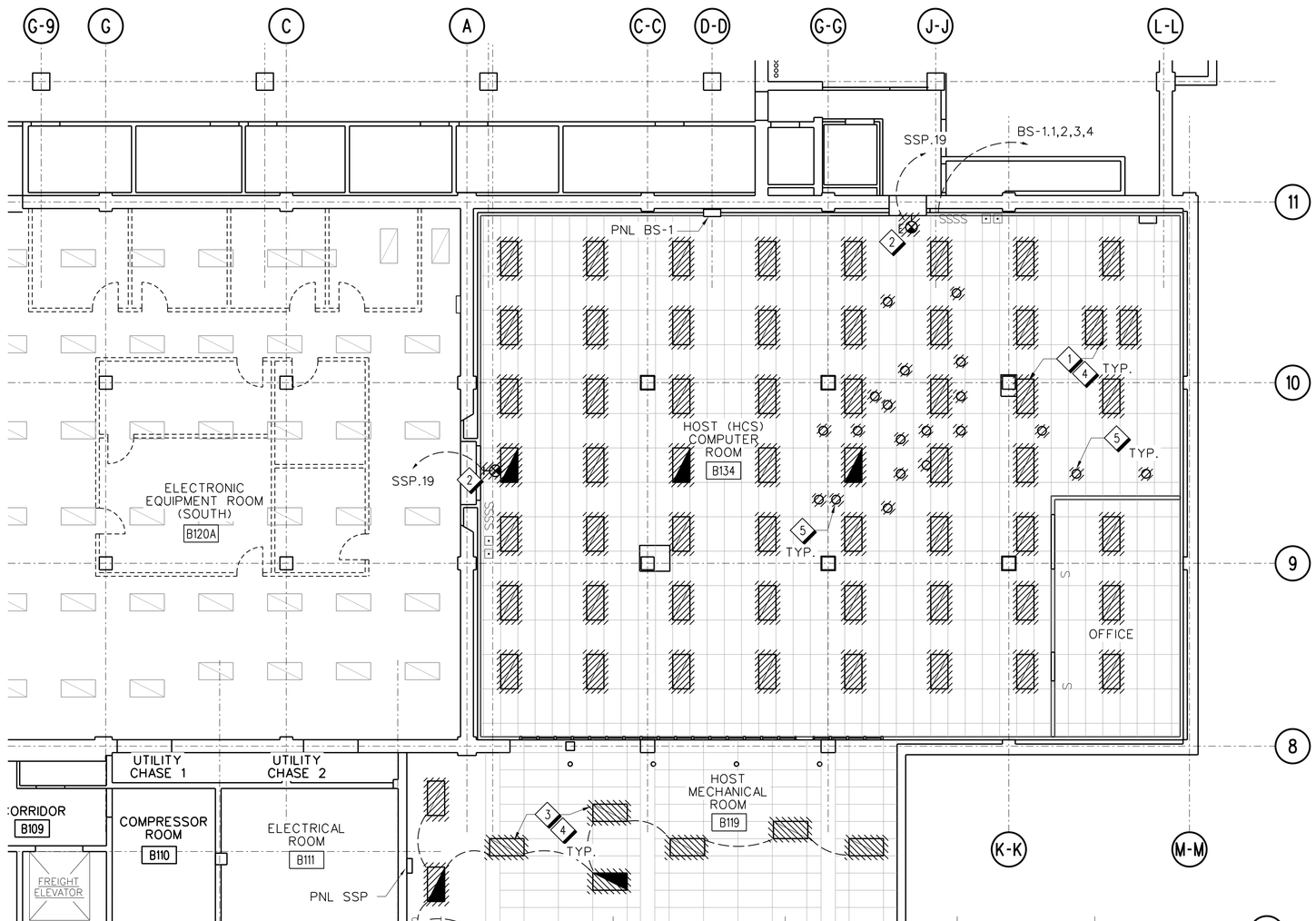

B8 / E112 BASEMENT ROOM B119/B134 LIGHTING PLAN - DEMOLITION

SCALE: 1/8" = 1'-0"

8' 0 8' 16'

SCALE: 1/8" = 1'-0"

GENERAL NOTES

A. REFER TO SPECIFICATION AND GENERAL NOTES ABOUT DEMOLITION INCLUDING ASBESTOS, LEAD AND PCB ABATEMENT ON GENERAL AND ARCHITECTURAL DRAWINGS.

B. MAINTAIN CONTINUITY TO AREAS NOT AFFECTED BY DEMOLITION OR PROVIDE TEMPORARY POWER PER OSHA AND ALL APPLICABLE LIFE SAFETY CODES.

SHEET NOTES

1. DEMOLISH LIGHTING FIXTURES. RETAIN EXISTING CONDUIT, CONDUCTORS AND J BOXES FOR REUSE. RETAIN EXISTING EMERGENCY LIGHT CIRCUIT.
2. DEMOLISH EXIT SIGN, ASSOCIATED CONDUIT AND WIRING BACK TO SOURCE.
3. DEMOLISH LIGHTING FIXTURES, ASSOCIATED LIGHTING SWITCHES, AND WIRING BACK TO SOURCE. RETAIN EXISTING EMERGENCY LIGHT CIRCUIT.
4. FLUORESCENT LIGHTING FIXTURES HAVE BALLAST WHICH MAY CONTAIN PCB MATERIAL. REMOVE EACH BALLAST FROM EACH FIXTURE AND DISPOSE OF BALLAST IN ACCORDANCE WITH FAA REQUIREMENTS. FLUORESCENT LAMPS SHALL BE DISPOSED OF AS RCRA WASTE.
5. DEMOLISH DOWNLIGHT FIXTURES, ASSOCIATED LIGHTING SWITCHES, AND WIRING BACK TO SOURCE.

KEY PLAN:

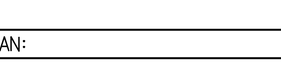

REV	APPROVED DATE	DESCRIPTION	JCN	REDLINE DATE	APVD

DEPARTMENT OF TRANSPORTATION
FEDERAL AVIATION ADMINISTRATION
ATO - TECHNICAL OPERATIONS WESTERN SERVICE AREA

ARTCC

MAJOR MECHANICAL MODERNIZATION
BASEMENT ROOM B119/B134
LIGHTING PLAN - DEMOLITION

DENVER LONGMONT CO

REVIEWED BY

SUBMITTED BY: PAUL TULENKO — PROJECT ENGINEER
APPROVED BY: CALLEN R. COLLINS — MGR: ENGINEERING - SEATTLE

DO NOT SIGN

DESIGNED: YM
DRAWN: JA
CHECKED:

ISSUED BY: ENGINEERING SERVICES ENROUTE/FSS

DATE
JCN: 1401893
DRAWING NO: ZDV-1401893-E112
REV

ISSUED FOR:

zdv-1401893-e112.dgn 6/27/2018 10:08:02 AM John CTR Allen

EDM: zdv-1401893-e112.dgn

DRAWING PRODUCED ON WSA MICROSTATION SYSTEM

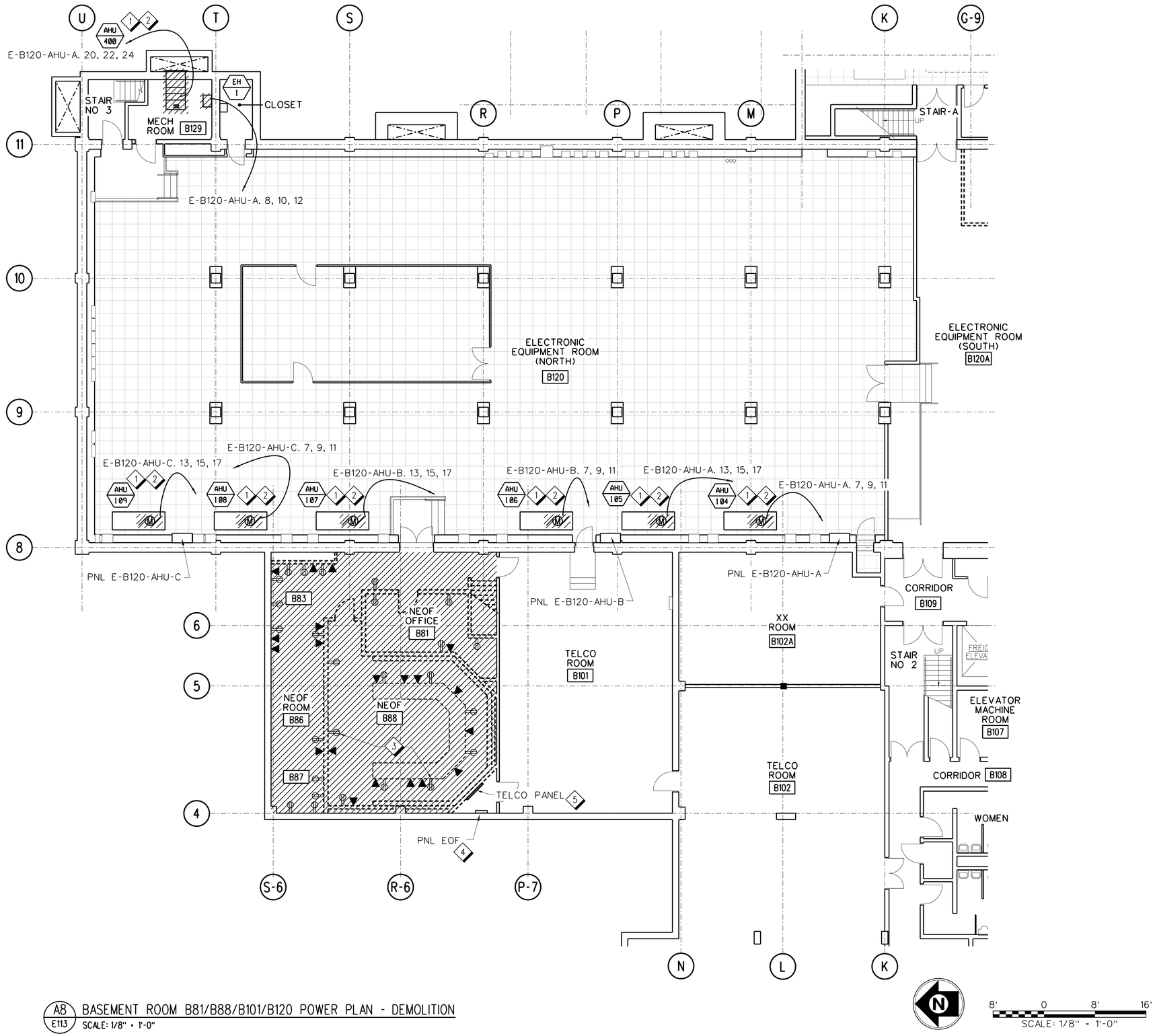

A8 / E113 BASEMENT ROOM B81/B88/B101/B120 POWER PLAN - DEMOLITION

SCALE: 1/8" = 1'-0"

GENERAL NOTES

A. REFER TO SPECIFICATION AND GENERAL NOTES ABOUT DEMOLITION INCLUDING ASBESTOS, LEAD AND PCB ABATEMENT ON GENERAL AND ARCHITECTURAL DRAWINGS.

B. BRANCH CIRCUIT CONDUIT RUNS ARE DIAGRAMMATIC, CONTRACTOR TO FIELD VERIFY BRANCH CIRCUITS PER PANELBOARD SCHEDULE AND THIS DRAWING. COORDINATE WITH COR.

C. MAINTAIN CONTINUITY TO AREAS NOT AFFECTED BY DEMOLITION OR PROVIDE TEMPORARY POWER PER OSHA AND ALL APPLICABLE LIFE SAFETY CODES.

D. COORDINATE DISCONNECTION OF AIR HANDLER UNIT WITH MECHANICAL DEMOLITION. WHERE MULTIPLE UNITS ARE BEING REPLACE WITHIN THE SAME ROOM, ONLY ONE AIR HANDLER UNIT SHALL BE DISCONNECTED AT ONE TIME.

SHEET NOTES

1. DEMOLISH AHU-104 THROUGH AHU-109, AHU-400 AND EH-1 AS SHOWN ON PLAN. REFER TO MECHANICAL PLAN M111 FOR ADDITIONAL INFORMATION.
2. CONTRACTOR SHALL TEST CONDUCTORS TO VERIFY THAT THEY CAN BE USED. IF CONDUCTORS FAIL INSPECTION, DEMOLISH CONDUCTORS.
3. DEMOLISH ALL ELECTRICAL RECEPTACLES, COMMUNICATIONS, AND DATA WIRES ASSOCIATED THE NEOF AND TEMPORAY OFFICE AREAS. DEMOLISH EXISTING CONDUCTORS AND CONDUIT BACK TO SOURCE.
4. PANEL PNL-EOF TO REMAIN.
5. DEMOLISH TELCO PANEL AND ALL ASSOCIATED BLOCKS AND WIRING, AND SUPPORTING STRUCTURE. DEMOLISH TELCO CONDUIT AND SUPPORTS WITHIN B88. COORDINATE EXTENT OF CONDUIT DEMOLITION WITH THE COR.

KEY PLAN:

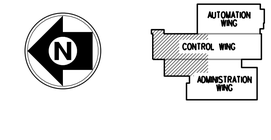

REV	APPROVED DATE	DESCRIPTION	JCN	REDLINE DATE	APVD

DEPARTMENT OF TRANSPORTATION
FEDERAL AVIATION ADMINISTRATION
ATO - TECHNICAL OPERATIONS WESTERN SERVICE AREA

ARTCC

MAJOR MECHANICAL MODERNIZATION
BASEMENT ROOM B81/B88/B101/B120
POWER PLAN - DEMOLITION

DENVER LONGMONT CO

REVIEWED BY

SUBMITTED BY: PAUL TULENKO — PROJECT ENGINEER

APPROVED BY: CALLEN R. COLLINS — MGR: ENGINEERING - SEATLLE

DO NOT SIGN

DESIGNED YM
DRAWN JA
CHECKED

ISSUED BY: ENGINEERING SERVICES ENROUTE/FSS

DATE
JCN 1401893
DRAWING NO ZDV-1401893-E113
REV

ISSUED FOR:

DRAWING PRODUCED ON WSA MICROSTATION SYSTEM

EDM: zdv-1401893-e113.dgn

rsh-1401893-e113.dgn 7/12/2019 10:36:13 AM John CTR Allen

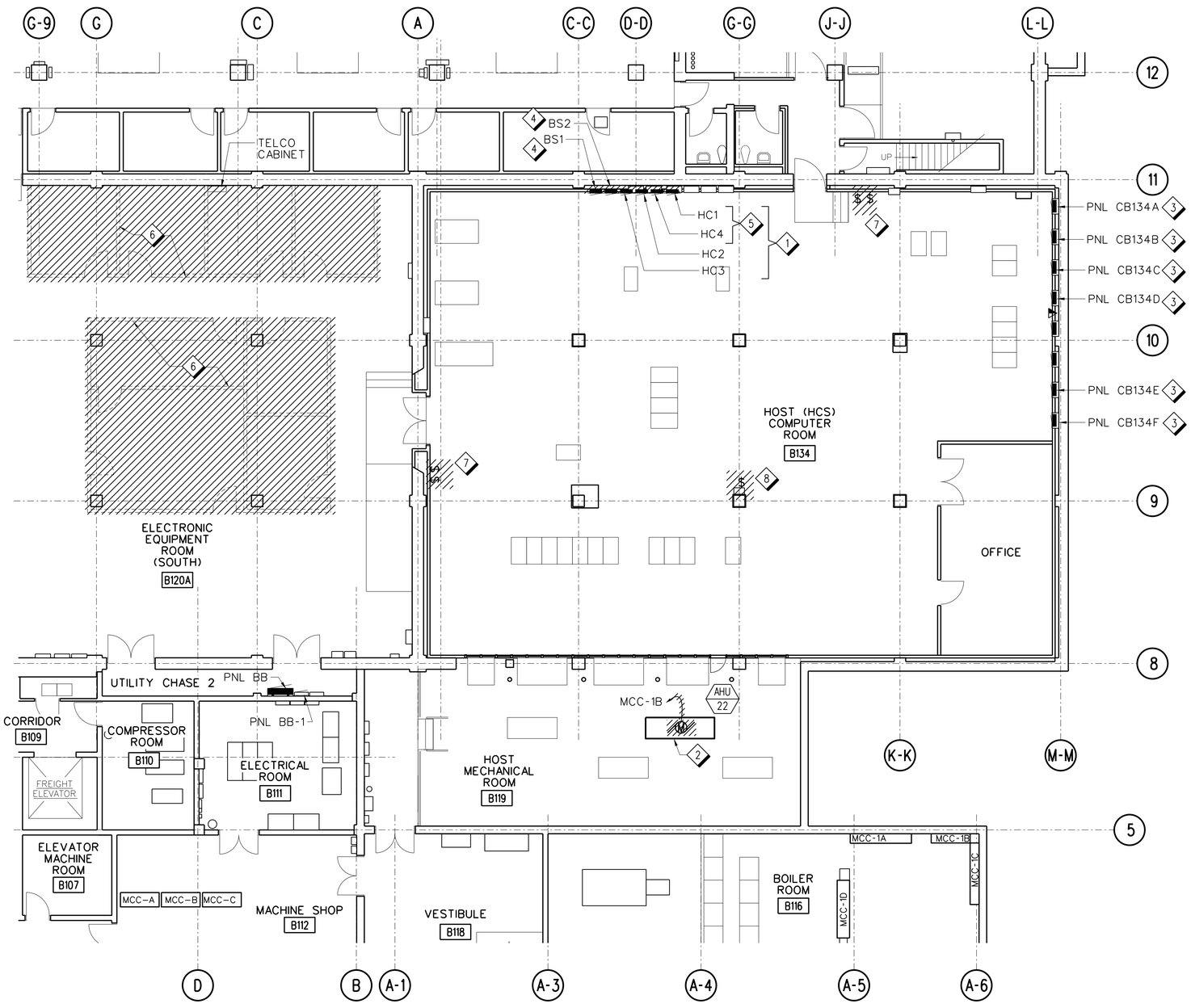

B8 / E114 HOST EQUIPMENT ROOM B119/B120A/B34 POWER PLAN - DEMOLITION

SCALE: 1/8" = 1'-0"

8' 0 8' 16'

SCALE: 1/8" = 1'-0"

GENERAL NOTES

A. REFER TO SPECIFICATION AND GENERAL NOTES ABOUT DEMOLITION INCLUDING ASBESTOS, LEAD AND PCB ABATEMENT ON GENERAL AND ARCHITECTURAL DRAWINGS.

B. BRANCH CIRCUIT CONDUIT RUNS ARE DIAGRAMMATIC, CONTRACTOR TO FIELD VERIFY BRANCH CIRCUITS PER PANELBOARD SCHEDULE AND THIS DRAWING. COORDINATE WITH COR.

C. MAINTAIN CONTINUITY TO AREAS NOT AFFECTED BY DEMOLITION OR PROVIDE TEMPORARY POWER PER OSHA AND ALL APPLICABLE LIFE SAFETY CODES.

D. COORDINATE DISCONNECTION OF AIR HANDLER UNIT WITH MECHANICAL DEMOLITION. WHERE MULTIPLE UNITS ARE BEING REPLACE WITHIN THE SAME ROOM, ONLY ONE AIR HANDLER UNIT SHALL BE DISCONNECTED AT ONE TIME.

SHEET NOTES

1. DEMOLISH EXISTING TRANSFER SWITCHES, CIRCUIT BREAKERS AND BUSES.
2. DEMOLISH EXISTING AHU-22 AND EXISTING WIRING BACK TO SOURCE AS SHOWN ON PLAN. REFER TO MECHANICAL PLAN M112 FOR ADDITIONAL INFORMATION.
3. EXISTING CRITICAL PANELBOARD AND TRANSFER SWITCH TO REMAIN.
4. EXISTING BUILDING SERVICE PANELBOARD TO REMAIN (REPLACED IN 2016)
5. DEMOLISH CONDUITS AND CONDUCTORS BACK TO SOURCE. REPLACE DOORS WITH BLANK COVERS TO MATCH BS1 AND BS2 IN COLOR. REFER TO ARCHITECT FOR ADDITIONAL INFORMATION.
6. DEMOLISH ALL ELECTRICAL RECEPTACLES, COMMUNICATIONS, AND DATA WIRES ASSOCIATED WITH THE TEMPORARY OFFICE AREAS. DEMOLISH EXISTING CONDUCTORS AND CONDUIT BACK TO SOURCE.
7. DEMOLISH EMERGENCY POWER SHUT OFF SWITCHES, CONDUCTORS AND CONDUIT BACK TO SOURCE. SWITCHES ACTIVATE SHUNTS IN THE MCC PANELS FOR AHU-21 THRU AHU-24, AND SHUNTS IN THE CRITICAL POWER PANELS HC1 THRU HC4. CRITICAL POWER OF SITE IS AFFECTED - VERIFY CIRCUITS AND COORDINATE WITH SITE PRIOR TO WORK BEING DONE.
8. DEMOLISH EMERGENCY CHILLED WATER CUTOVER PANEL, SWITCHES, TALK BACK LIGHTS, CONDUCTORS AND CONDUIT BACK TO SOURCE. - VERIFY CIRCUITS AND COORDINATE WITH SITE PRIOR TO WORK BEING DONE.

KEY PLAN:

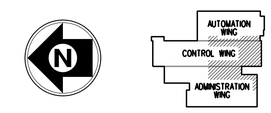

REV	APPROVED DATE	DESCRIPTION	JCN	REDLINE DATE	APVD

DEPARTMENT OF TRANSPORTATION
FEDERAL AVIATION ADMINISTRATION
ATO - TECHNICAL OPERATIONS WESTERN SERVICE AREA

ARTCC

MAJOR MECHANICAL MODERNIZATION
BASEMENT ROOM B119/B120A/B134
POWER PLAN - DEMOLITION

DENVER LONGMONT CO

REVIEWED BY

SUBMITTED BY: PAUL TULENKO — PROJECT ENGINEER

APPROVED BY: CALLEN R. COLLINS — MGR: ENGINEERING - SEATTLE

DO NOT SIGN

DESIGNED YM
DRAWN JA
CHECKED

ISSUED BY: ENGINEERING SERVICES ENROUTE/FSS

DATE
JCN 1401893
DRAWING NO ZDV-1401893-E114
REV

ISSUED FOR:

zdv-1401893-e114.dgn 6/27/2018 11:07:20 AM John CTR Allen

EDM: zdv-1401893-e114.dgn

DRAWING PRODUCED ON WSA MICROSTATION SYSTEM

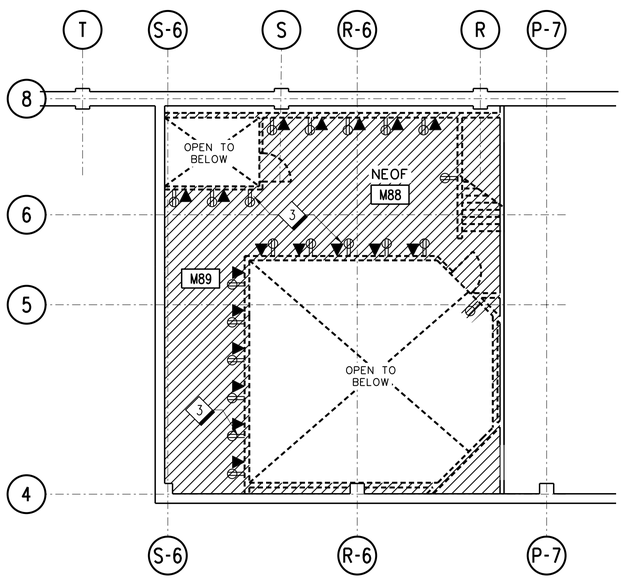

B7 / E115 NEOF MEZZANINE POWER DEMOLITION PLAN
SCALE: 1/8" = 1'-0"

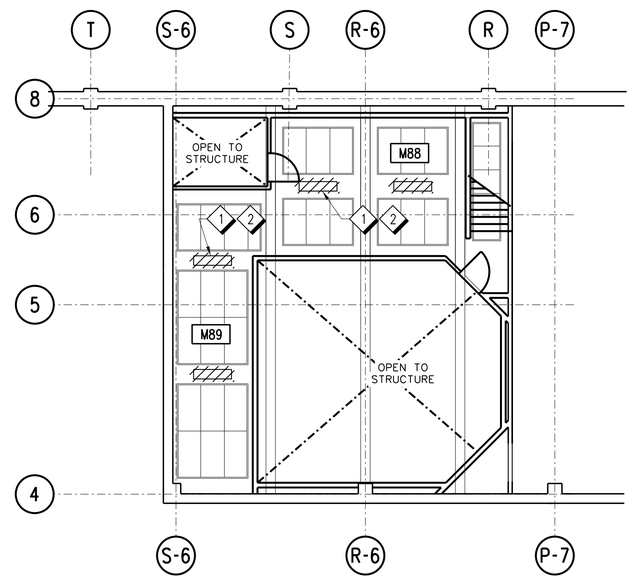

B5 / E115 NEOF MEZZANINE REFLECTED CEILING DEMOLITION PLAN
SCALE: 1/8" = 1'-0"

GENERAL NOTES

A. REFER TO SPECIFICATION AND GENERAL NOTES ABOUT DEMOLITION INCLUDING ASBESTOS, LEAD AND PCB ABATEMENT ON GENERAL AND ARCHITECTURAL DRAWINGS.

B. BRANCH CIRCUIT CONDUIT RUNS ARE DIAGRAMMATIC, CONTRACTOR TO FIELD VERIFY BRANCH CIRCUITS PER PANELBOARD SCHEDULE AND THIS DRAWING. COORDINATE WITH COR.

C. MAINTAIN CONTINUITY TO AREAS NOT AFFECTED BY DEMOLITION OR PROVIDE TEMPORARY POWER PER OSHA AND ALL APPLICABLE LIFE SAFETY CODES.

D. COORDINATE DISCONNECTION OF AIR HANDLER UNIT WITH MECHANICAL DEMOLITION. WHERE MULTIPLE UNITS ARE BEING REPLACE WITHIN THE SAME ROOM, ONLY ONE AIR HANDLER UNIT SHALL BE DISCONNECTED AT ONE TIME.

SHEET NOTES

1. FLUORESCENT LIGHTING FIXTURES HAVE BALLAST WHICH MAY CONTAIN PCB MATERIAL. REMOVE EACH BALLAST FROM EACH FIXTURE AND DISPOSE OF BALLAST IN ACCORDANCE WITH FAA REQUIREMENTS. FLUORESCENT LAMPS SHALL BE DISPOSED OF AS RCRA WASTE.
2. DEMOLISH LIGHTING FIXTURES, ASSOCIATED LIGHTING SWITCHES, CONDUIT AND WIRING BACK TO SOURCE (PNL BS1). WHERE CONDUITS ARE INACCESSIBLE FOR REMOVAL, LEAVE IN PLACE, CAP AND PERMANENTLY IDENTIFY.
3. DEMOLISH ALL ELECTRICAL RECEPTACLES, COMMUNICATION, AND DATA WIRES ASSOCIATED WITH THE TEMPORARY OFFICES. DEMOLISH EXISTING CONDUCTORS AND CONDUIT BACK TO SOURCE. REFER TO SHEET E113 FOR ADDITIONAL INFORMATION.

KEY PLAN:

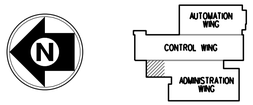

REV	APPROVED DATE	DESCRIPTION	JCN	REDLINE DATE	APVD

DEPARTMENT OF TRANSPORTATION
FEDERAL AVIATION ADMINISTRATION
ATO - TECHNICAL OPERATIONS — WESTERN SERVICE AREA

ARTCC
MAJOR MECHANICAL MODERNIZATION
NEOF MEZZANINE ROOM M88
DEMOLITION PLAN AND RCP DEMOLITION

DENVER — LONGMONT — CO

REVIEWED BY

SUBMITTED BY: PAUL TULENKO — PROJECT ENGINEER
APPROVED BY: CALLEN R. COLLINS — MGR: ENGINEERING - SEATTLE

DO NOT SIGN

DESIGNED: YM
DRAWN: JA
CHECKED:
ISSUED BY: ENGINEERING SERVICES ENROUTE/FSS
DATE:
JCN: 1401893
DRAWING NO: ZDV-1401893-E115
REV:

N
8' 0 8' 16'
SCALE: 1/8" = 1'-0"

ISSUED FOR:

rdp-1401893-e115.dgn 6/27/2018 11:08:28 AM John CTR Allen

DGN: zdv-1401893-e115.dgn

DRAWING PRODUCED ON WSA MICROSTATION SYSTEM

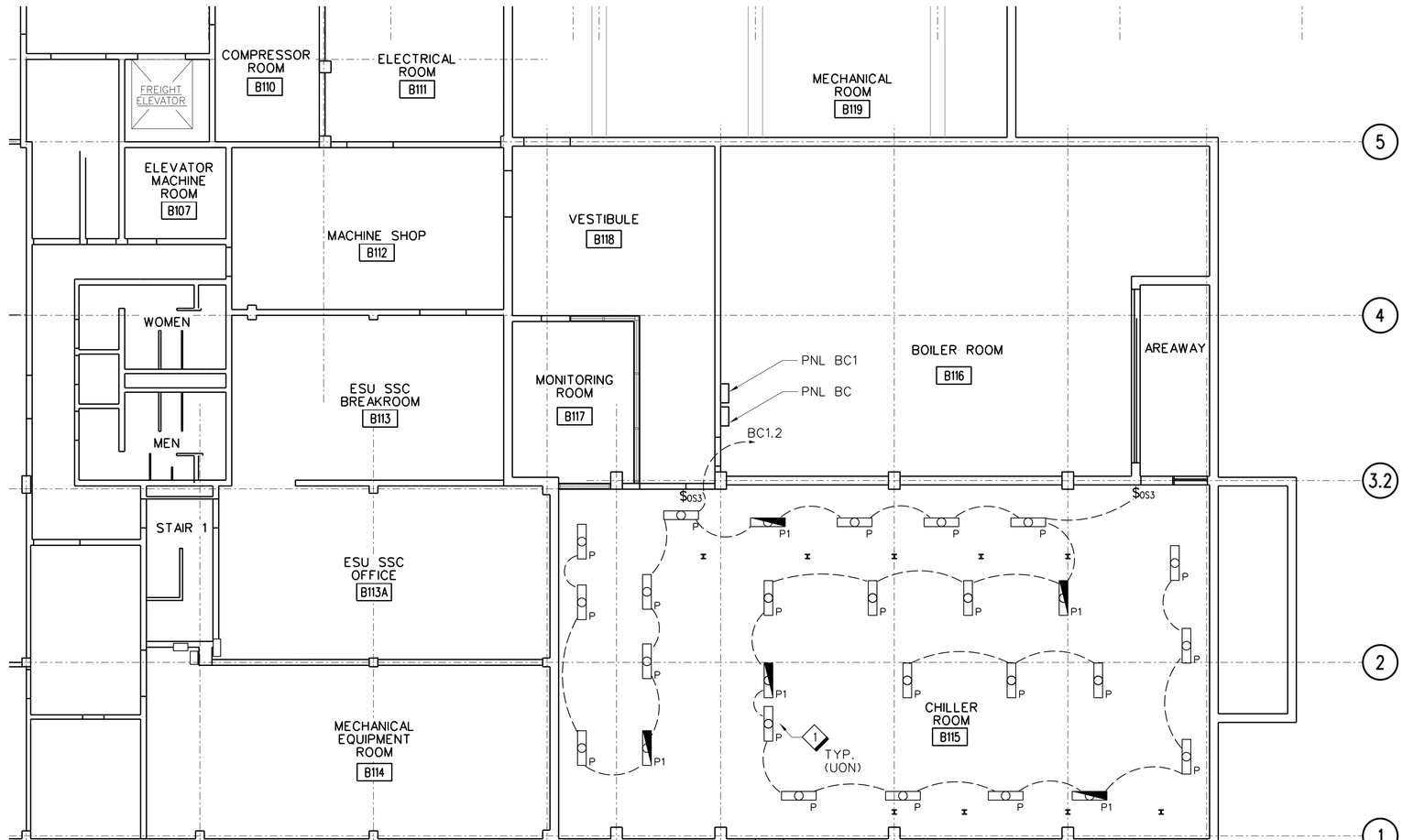

B8 / E201 BASEMENT CHILLER ROOM B115 LIGHTING PLAN - NEW WORK

SCALE: 1/8" = 1'-0"

GENERAL NOTES

A. BRANCH CIRCUIT CONDUIT RUNS ARE DIAGRAMMATIC, CONTRACTOR TO FIELD VERIFY BRANCH CIRCUITS PER PANELBOARD SCHEDULE AND THIS DRAWING. COORDINATE WITH COR. TAG OTHER LOADS IF ANY THAT WILL RAIN ON 120V AND RE-CIRCUIT TO EXISTING PANELBOARD.

SHEET NOTES

1. PROVIDE AND INSTALL LED 2-TUBE EQUIVALENT LUMINAIRE IN THE SAME LOCATION/HEIGHT TO MATCH EXISTING. RECONNECT FIXTURES TO EXISTING CIRCUIT. ALL LUMINAIRE SHALL BE SUPPORTED PROPERLY TO STRUCTURE ABOVE.

KEY PLAN:

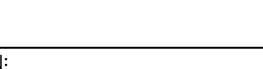

REV	APPROVED DATE	DESCRIPTION	JCN	REDLINE DATE	APVD

DEPARTMENT OF TRANSPORTATION
FEDERAL AVIATION ADMINISTRATION
ATO - TECHNICAL OPERATIONS — WESTERN SERVICE AREA

ARTCC

MAJOR MECHANICAL MODERNIZATION
BASEMENT ROOM B115
LIGHTING PLAN

DENVER — LONGMONT — CO

REVIEWED BY

SUBMITTED BY: PAUL TULENKO — PROJECT ENGINEER

APPROVED BY: CALLEN R. COLLINS — MGR: ENGINEERING - SEATTLE

DO NOT SIGN

DESIGNED: TL
DRAWN: JA
CHECKED:

ISSUED BY: ENGINEERING SERVICES ENROUTE/FSS

DATE:
JCN: 1401893
DRAWING NO: ZDV-1401893-E201
REV:

ISSUED FOR:

DRAWING PRODUCED ON WSA MICROSTATION SYSTEM

zdv-1401893-e201.dgn 6/28/2018 10:32:52 AM John CTR Allen

EDM: zdv-1401893-e201.dgn

GENERAL SHEET NOTES:

A. BRANCH CIRCUIT CONDUIT RUNS ARE DIAGRAMMATIC, CONTRACTOR TO FIELD VERIFY BRANCH CIRCUITS PER PANELBOARD SCHEDULE AND THIS DRAWING. COORDINATE WITH COR. TAG OTHER LOADS IF ANY THAT WILL REMAIN ON 120V AND RE-CIRCUIT TO EXISTING PANELBOARD.

B. ALL EXTERIOR AND UNDERGROUND CONDUIT AND FITTINGS SHALL BE PVC COATED RIGID GALVANIZED STEEL.

SHEET NOTES:

1. INSTALL LED LIGHT FIXTURES. REUSE EXISTING STEMS AND UNI-STRUT SUPPORTS. RE-ENGINEER OR SEISMICALLY BRACE AS REQUIRED.
2. PUMP HOUSE EXTERIOR LIGHTS SHALL BE CONTROLLED BY PHOTOCELL SWITCH.
3. PROVIDE WALL MOUNT LED LIGHT FIXTURE FOR COOLING TOWERS. MOUNT TO COOLING TOWERS PER MANUFACTURER'S RECOMMENDATION. LIGHTS SHALL BE CONTROLLED BY PHOTOCELL SWITCH.
4. CONNECT LIGHT TO EMERGENCY LIGHTING CIRCUIT.

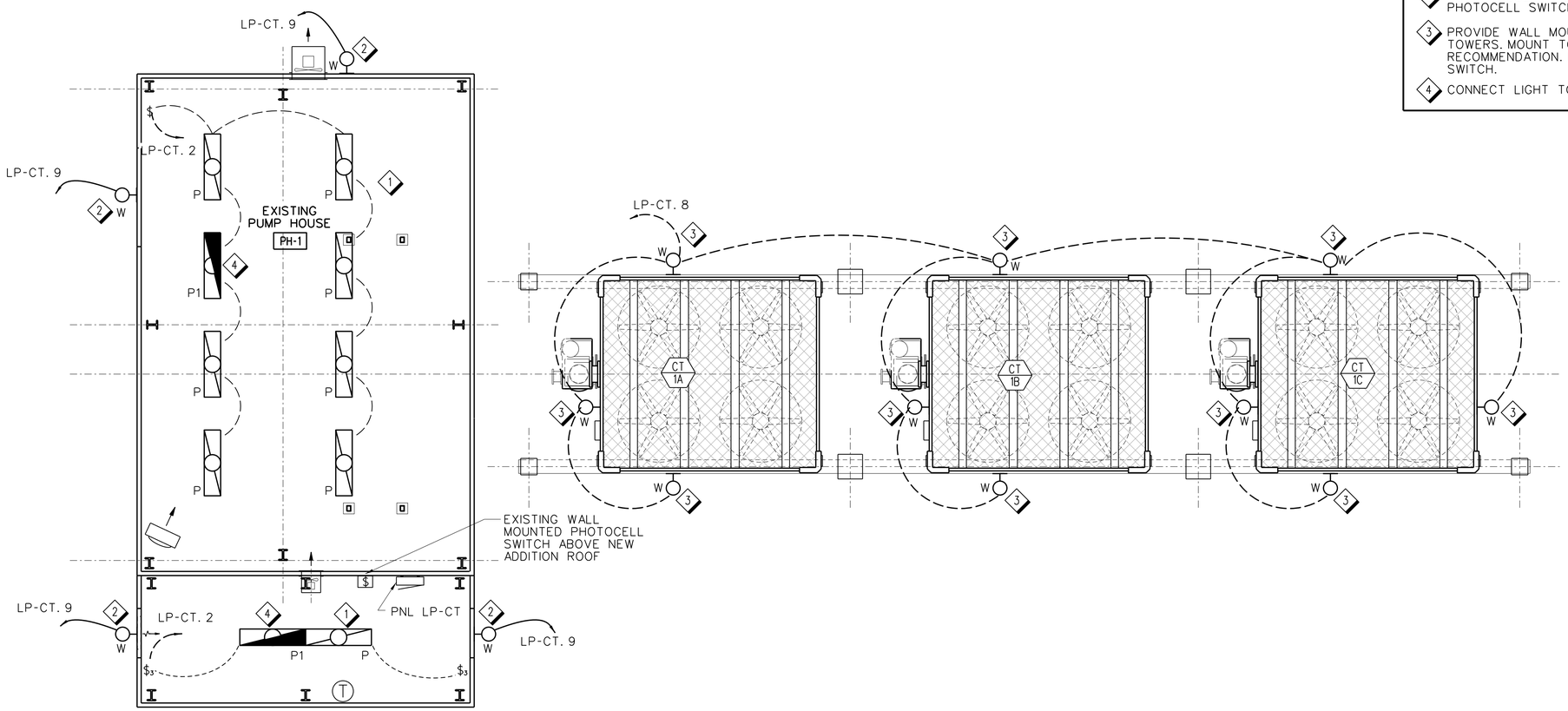

C7 / E202 COOLING TOWER AND PUMP HOUSE LIGHTING PLAN
SCALE: 1/4" = 1'-0"

4' 0 4' 8'
SCALE: 1/4" = 1'-0"

REV	APPROVED DATE	DESCRIPTION	JCN	REDLINE DATE	APVD

DEPARTMENT OF TRANSPORTATION
FEDERAL AVIATION ADMINISTRATION
ATO - TECHNICAL OPERATIONS — WESTERN SERVICE AREA

ARTCC

MAJOR MECHANICAL MODERNIZATION
COOLING TOWER AND PUMP HOUSE
LIGHTING PLAN

DENVER — LONGMONT — CO

REVIEWED BY

SUBMITTED BY: PAUL TULENKO — PROJECT ENGINEER

APPROVED BY: CALLEN R. COLLINS — MGR: ENGINEERING - SEATTLE

DO NOT SIGN

DESIGNED: TL
DRAWN: JA
CHECKED:

ISSUED BY: ENGINEERING SERVICES ENROUTE/FSS

DATE
JCN: 1401893
DRAWING NO: ZDV-1401893-E202
REV

ISSUED FOR:

DRAWING PRODUCED ON WSA MICROSTATION SYSTEM

zdv-1401893-e202.dgn 6/27/2018 11:12:12 AM John CTR Allen

EDM: zdv-1401893-e202.dgn

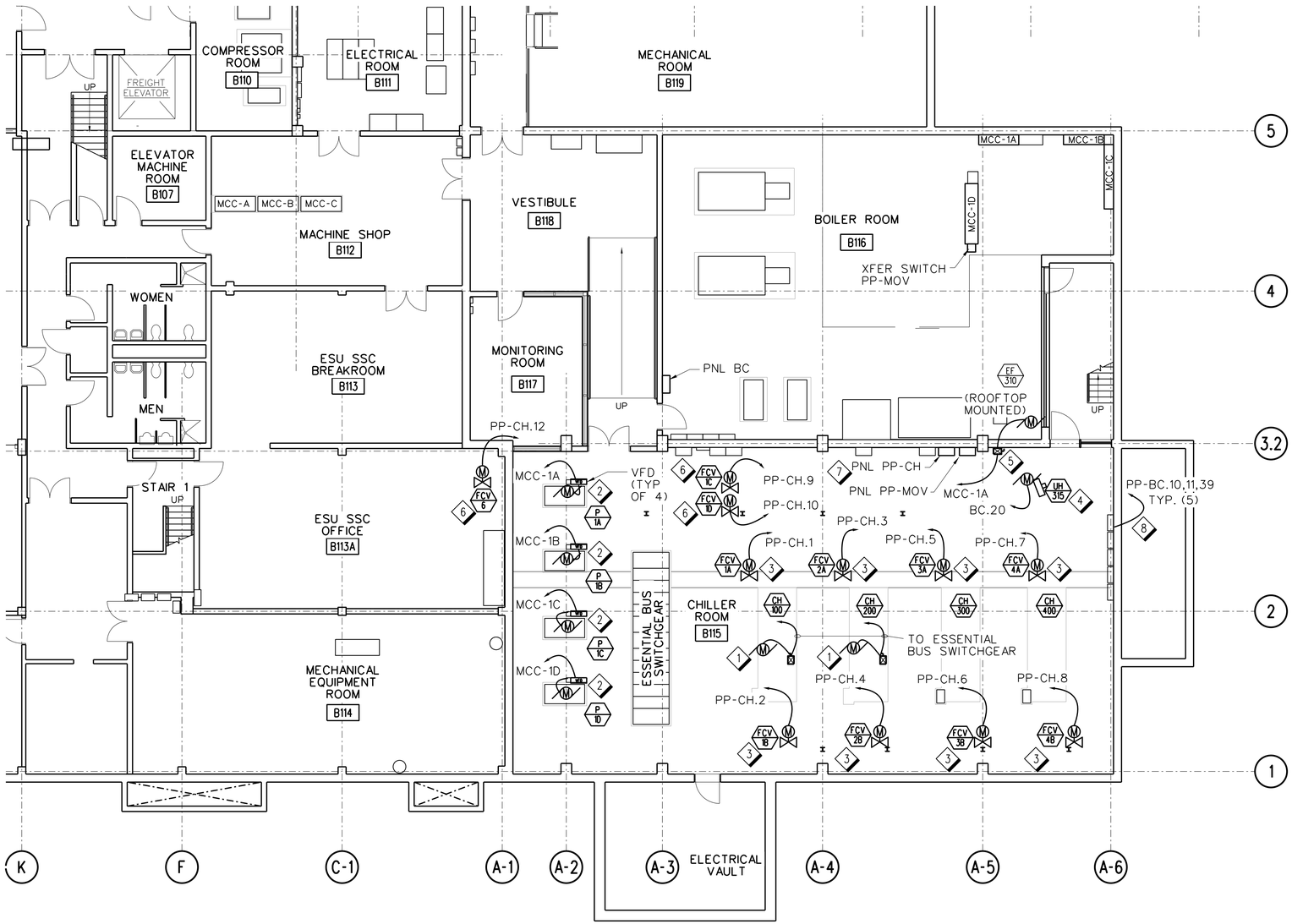

B8 E203 BASEMENT ROOM B115 POWER PLAN - NEW WORK

SCALE: 1/8" = 1'-0"

8' 0 8' 16'

SCALE: 1/8" = 1'-0"

GENERAL NOTES

A. BRANCH CIRCUIT CONDUIT RUNS ARE DIAGRAMMATIC, CONTRACTOR TO FIELD VERIFY BRANCH CIRCUITS PER PANELBOARD SCHEDULE AND THIS DRAWING. COORDINATE WITH COTR. TAG OTHER LOADS IF ANY THAT WILL REMAIN ON 120V AND RE-CIRCUIT TO EXISTING PANELBOARD.

SHEET NOTES

1. PROVIDE CONDUIT AND CONDUCTORS FROM ESSENTIAL BUS TO CHILLER UNITS. TERMINATE PER MANUFACTURE'S INSTRUCTIONS.
2. PROVIDE VFD. PROVIDE CONDUIT AND WIRING FROM VFD TO PUMP EXTEND WITH FLEXIBLE CONUIT AND WIRING AS REQUIRED.
3. RECONNECT EXISTING WIRING TO FCV. CONTRACTOR SHALL SPLICE AND EXTEND EXISTING CONDUIT AND WIRING TO FCV AS REQUIRED.
4. RECONNECT EXISTING WIRING TO UNIT HEATER. CONTRACTOR SHALL SPLICE AND EXTEND EXISTING CONDUIT AND WIRING TO UNIT HEATER AS REQUIRED.
5. RECONNECT EXISTING WIRING TO MOTOR STARTER. CONTRACTOR SHALL SPLICE AND EXTEND EXISTING CONDUIT AND WIRING TO NEW UNIT AS REQUIRED. PROVIDE CONDUIT AND WIRING FROM MOTOR STARTER TO ROOFTOP MOUNTED EXHAUST FAN. RECONNECT EXISTING GROUNDING JUMPER TO UNIT.
6. PROVIDE CONDUIT AND CONDUCTORS FROM PP-CH TO FCV.
7. PROVIDE 50A, 24 SLOT, 4 WIRE, NEMA1, 208V/120V PANEL BOARD AND 15 kVA 480:208 DELTA/WYE TRANSFORMER.
8. PROVIDE CONDUIT AND CONDUCTORS FROM PP-CH TO DDCP PANELS.

KEY PLAN:

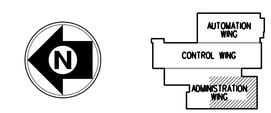

REV	APPROVED DATE	DESCRIPTION	JCN	REDLINE DATE	APVD

DEPARTMENT OF TRANSPORTATION
FEDERAL AVIATION ADMINISTRATION
ATO - TECHNICAL OPERATIONS WESTERN SERVICE AREA

ARTCC

MAJOR MECHANICAL MODERNIZATION
BASEMENT ROOM B115
POWER PLAN

DENVER LONGMONT CO

REVIEWED BY

SUBMITTED BY: PAUL TULENKO — PROJECT ENGINEER

APPROVED BY: CALLEN R. COLLINS — MGR: ENGINEERING - SEATTLE

DO NOT SIGN

DESIGNED TL
DRAWN JA
CHECKED

ISSUED BY: ENGINEERING SERVICES ENROUTE/FSS

DATE
JCN 1401893
DRAWING NO ZDV-1401893-E203
REV

ISSUED FOR:

rdp-1401893-e203.dgn 7/10/2018 5:24:00 PM John CTR Allen

EDM: zdv-1401893-e203.dgn

DRAWING PRODUCED ON WSA MICROSTATION SYSTEM

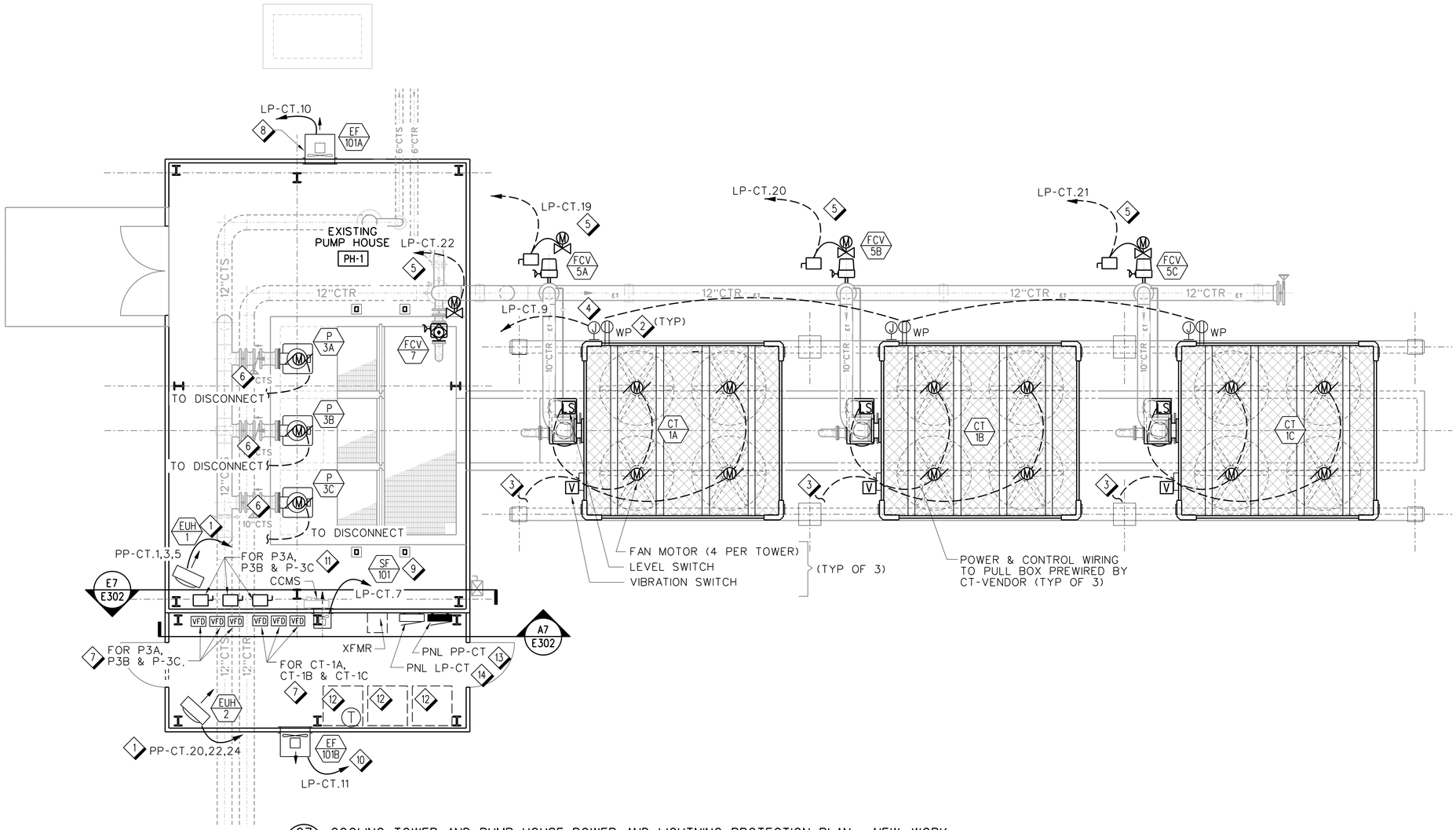

C7 / E204 COOLING TOWER AND PUMP HOUSE POWER AND LIGHTNING PROTECTION PLAN - NEW WORK

SCALE: 1/4" = 1'-0"

GENERAL NOTES

A. BRANCH CIRCUIT CONDUIT RUNS ARE DIAGRAMMATIC, CONTRACTOR TO FIELD VERIFY BRANCH CIRCUITS PER PANELBOARD SCHEDULE AND THIS DRAWING. COORDINATE WITH COR. TAG OTHER LOADS IF ANY THAT WILL REMAIN ON 120V AND RE-CIRCUIT TO EXISTING PANELBOARD.

B. NEW VFDS AND DISCONNECT SWITCHES INSTALLED ON THE EXTERIOR OR IN THE PUMP HOUSE SHALL BE PROVIDED WITH NEMA 4X STAINLESS STEEL ENCLOSURE. LOCATED IN THE PUMP HOUSE SHALL BE INSTALLED WITH NEMA 3R ENCLOSURE.

C. ALL EXTERIOR AND UNDERGROUND CONDUIT AND FITTINGS SHALL BE PVC COATED RIGID GALVANIZED STEEL.

SHEET NOTES

1. PROVIDE UNIT HEATER. CONTRACTOR SHALL SPLICE AND EXTEND EXISTING CONDUIT AND WIRING TO REPLACEMENT UNIT AS REQUIRED.
2. PROVIDE GFCI RECEPTACLES WITH "IN USE" WEATHERPROOF COVERS. RECEPTICLES SHALL BE MOUNTED ON THE NEW COOLING TOWER 48" ABOVE THE GROUND WITH UNISTRUT SUPPORT AS REQUIRED.
3. PROVIDE JUNCTION BOX AT EXISTING CONDUIT STUB UP LOCATION. PROVIDE NEW WIRING FROM VFD TO COOLING TOWER IN EXISTING CONDUIT. EXTEND CONDUIT TO COOLING TOWER AS REQUIRED.
4. EXISTING PULL BOX AND BRANCH CIRCUITS BACK TO PANEL LP-CT. SPLICE AND EXTEND EXISTING CONDUIT AND WIRING TO NEW LOADS AS SHOWN.
5. PROVIDE FCV, DISCONNECT SWITCH, CONDUIT AND CONDUCTORS BACK TO PANEL LP-CT.
6. RECONNECT EXISTING WIRING TO THE PUMP. CONTRACTOR SHALL SPLICE AND EXTEND EXISTING CONDUIT AND WIRING FOR RECONNECTION TO REPLACEMENT UNIT AS REQUIRED. REFER TO SHEET E502 AND E503 FOR PUMP CIRCUIT IDENTIFICATIONS.
7. PROVIDE VFD. CONTRACTOR SHALL SPLICE AND EXTEND EXISTING CONDUIT AND WIRING FROM PUMP HOUSE TO VFD AS REQUIRED.
8. RECONNECT EXISTING WIRING TO THE EXHAUST FAN. CONTRACTOR SHALL SPLICE AND EXTEND EXISTING WIRING AND CONDUIT TO UNIT AS REQUIRED.
9. RECONNECT EXISTING WIRING TO THE SUPPLY FAN. CONTRACTOR SHALL SPLICE AND EXTEND EXISTING WIRING AND CONDUIT TO UNIT AS REQUIRED.
10. PROVIDE 20A, 1P CIRCUIT BREAKER IN PANEL LP-CT FOR EXHAUST FAN. BREAKER SHALL MATCH EXISTING BREAKER IN MANUFACTURER, TYPE, AND AIC RATING.
11. PROVIDE DISCONNECT FOR PUMPS. CONTRACTOR SHALL SPLICE AND EXTEND EXISTING CONDUIT AND WIRING TO PUMP AS REQUIRED.
12. LOCATION OF POTENTIAL HARMONIC FILTERS. CONTRACTOR TO TEST CIRCUIT AND INSTALL ONLY IF DISTORTION EXCEEDS FAA SPECIFICATIONS.
13. PROVIDE PANEL PP-CT. CONTRACTOR SHALL SPLICE AND EXTEND EXISTING CONDUIT AND WIRING FROM PUMP HOUSE TO PANEL AS REQUIRED.
14. PROVIDE PANEL LP-CT. CONTRACTOR SHALL SPLICE AND EXTEND EXISTING CONDUIT AND WIRING FROM PUMP HOUSE TO PANEL AS REQUIRED.

N

4' 0 4' 8'

SCALE: 1/4" = 1'-0"

REV	APPROVED DATE	DESCRIPTION	JCN	REDLINE DATE	APVD

DEPARTMENT OF TRANSPORTATION
FEDERAL AVIATION ADMINISTRATION
ATO - TECHNICAL OPERATIONS WESTERN SERVICE AREA

ARTCC

MAJOR MECHANICAL MODERNIZATION
COOLING TOWER AND PUMP HOUSE
POWER PLAN

DENVER LONGMONT CO

REVIEWED BY

SUBMITTED BY: PAUL TULENKO — PROJECT ENGINEER

APPROVED BY: CALLEN R. COLLINS — MGR: ENGINEERING - SEATTLE

DO NOT SIGN

DESIGNED TL
DRAWN JA
CHECKED

ISSUED BY: ENGINEERING SERVICES ENROUTE/FSS

DATE
JCN 1401893
DRAWING NO ZDV-1401893-E204
REV

ISSUED FOR:

DRAWING PRODUCED ON WSA MICROSTATION SYSTEM

rsh-1401893-e204.dgn 6/27/2018 11:19:52 AM John CTR Allen

EDM: zdv-1401893-e204.dgn

GENERAL SHEET NOTES:

A. CONTRACTOR SHALL MAINTAIN AN ADEQUATE LIGHTNING PROTECTION SYSTEM AT ALL TIMES. TEMPORARILY MOUNT LIGHTNING RODS AND CONDUCTORS AS REQUIRED. COR TO APPROVE PLANNED TEMPORARY INSTALLATION.

B. ALL GROUND CONDUCTORS CONNECTIONS SHALL BE EXOTHERMICALLY WELDED.

SHEET NOTES:

1. PROVIDE NEW AIR TERMINALS AND PRIMARY LOOP CONDUCTOR ON TOP OF NEW COOLING TOWER.
2. PROVIDE NEW DOWN CONDUCTOR AND SPLICE TO EXISTING EARTH ELECTRODE CONDUCTOR IN STUB UP. REATTACH CONDUIT SLEEVE TO SUPPORTING STRUCTURE FOR NEW COOLING TOWER.
3. EXISTING EARTH ELECTRODE CONDUCTOR IN STUB UP.
4. EXISTING AIR TERMINALS AND PRIMARY LOOP CONDUCTOR ON TOP OF PUMP HOUSE.
5. NEW AIR TERMINALS AND PRIMARY LOOP CONDUCTOR ON TOP OF PUMP HOUSE.
6. PROVIDE NEW DOWN CONDUCTOR AND EARTH ELECTRODE CONDUCTOR IN STUB UP.
7. PROVIDE CONDUCTOR FOR LOWER ACCESS PLATORM AND SPLICE TO EXISTING EARTH ELECTRODE CONDUCTOR IN STUB UP.

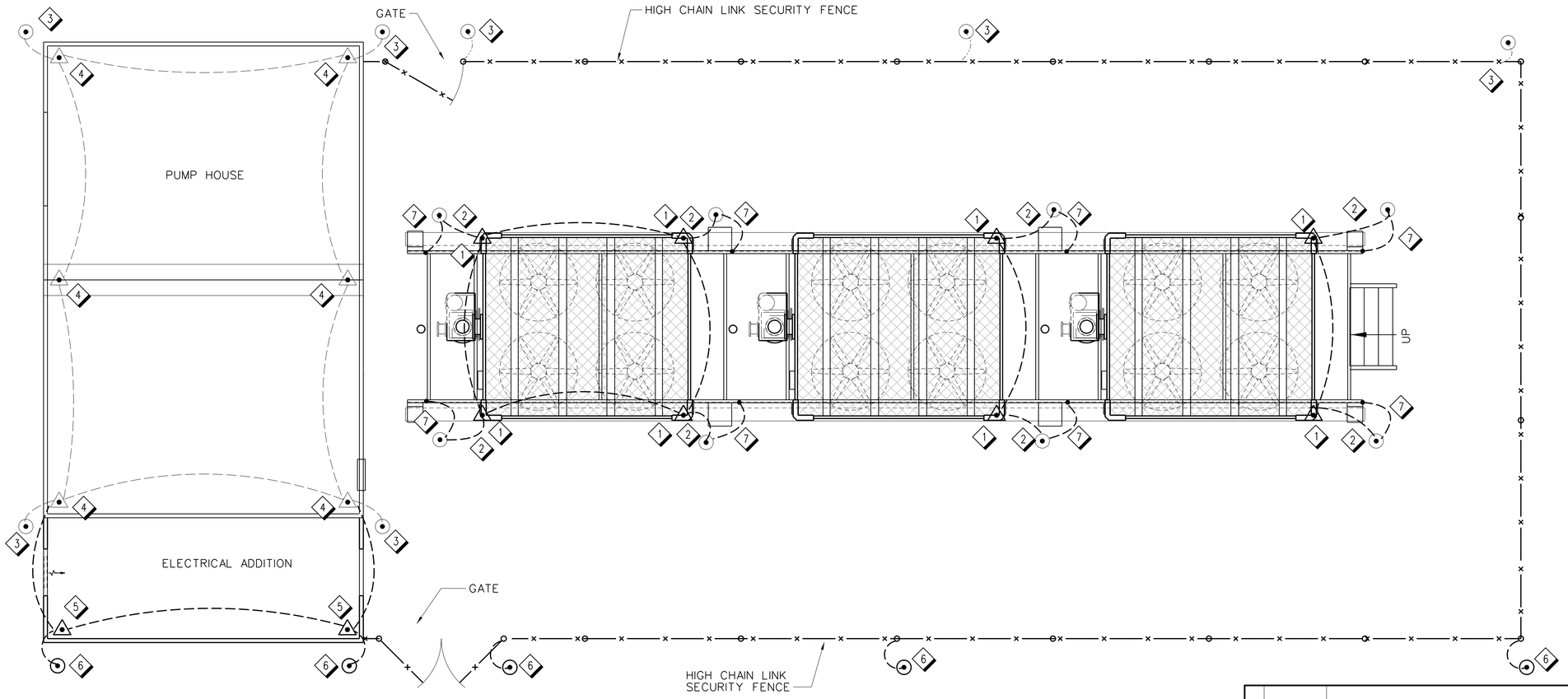

B7 / E205 COOLING TOWER AND PUMP HOUSE LIGHTNING PROTECTION PLAN
SCALE: 1/4" = 1'-0"

4' 0 4' 8'
SCALE: 1/4" = 1'-0"

REV	APPROVED DATE	DESCRIPTION	JCN	REDLINE DATE	APVD

DEPARTMENT OF TRANSPORTATION
FEDERAL AVIATION ADMINISTRATION
ATO - TECHNICAL OPERATIONS — WESTERN SERVICE AREA

ARTCC

MAJOR MECHANICAL MODERNIZATION
COOLING TOWER AND PUMP HOUSE
LIGHTNING PROTECTION PLAN

DENVER — LONGMONT — CO

REVIEWED BY

SUBMITTED BY: PAUL TULENKO — PROJECT ENGINEER

APPROVED BY: CALLEN R. COLLINS — MGR: ENGINEERING - SEATTLE

DO NOT SIGN

DESIGNED: TL
DRAWN: JA
CHECKED:

ISSUED BY: ENGINEERING SERVICES ENROUTE/FSS

DATE:
JCN: 1401893
DRAWING NO: ZDV-1401893-E205
REV:

ISSUED FOR:

zdv-1401893-e205.dgn 6/27/2018 11:20:35 AM John CTR Allen

EDM: zdv-1401893-e205.dgn

DRAWING PRODUCED ON WSA MICROSTATION SYSTEM

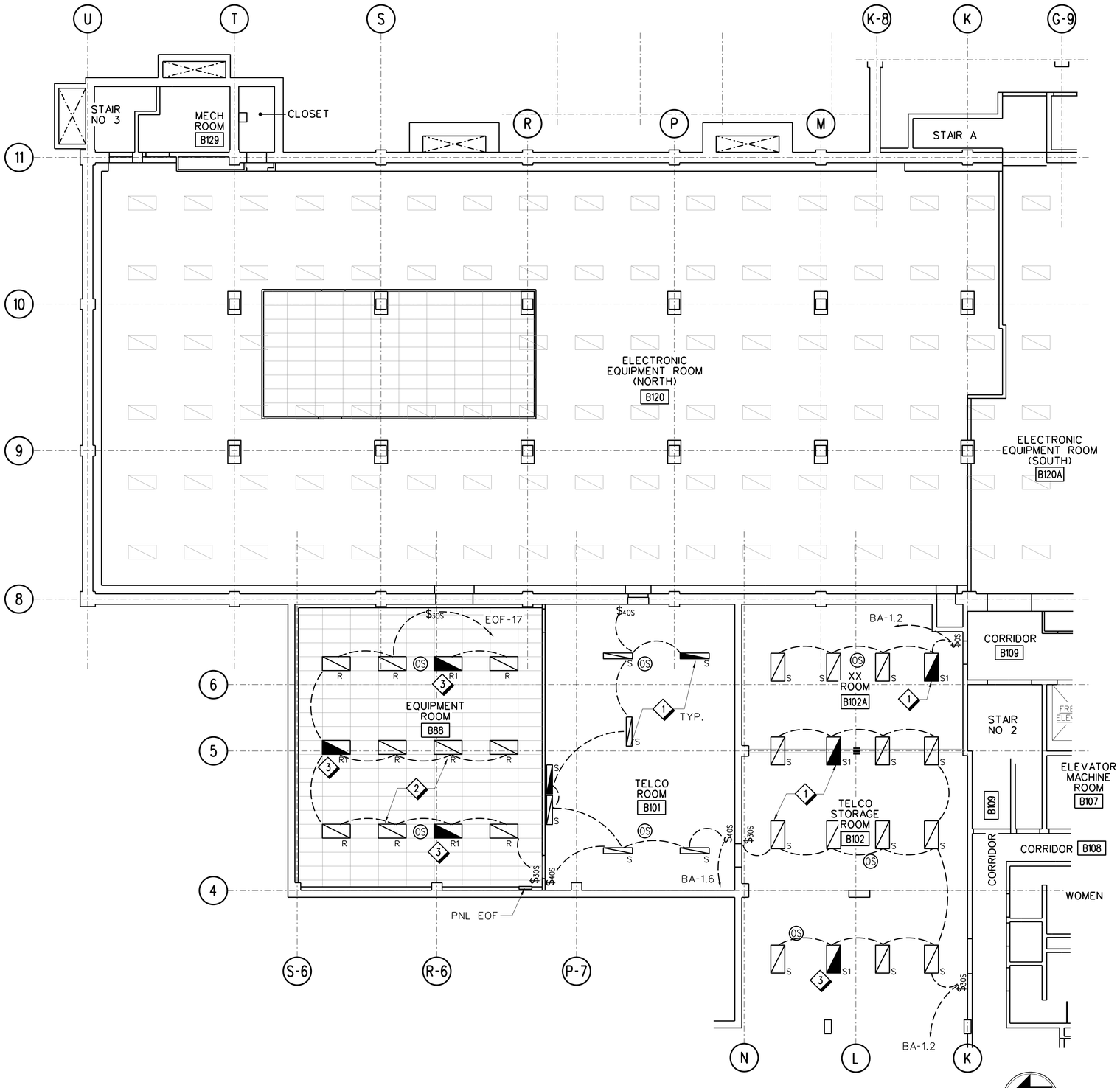

A8 / E211 BASEMENT ROOM B88/B101/B102 LIGHTING PLAN
SCALE: 1/8" = 1'-0"

GENERAL NOTES

A. BRANCH CIRCUIT CONDUIT RUNS ARE DIAGRAMMATIC, CONTRACTOR TO FIELD VERIFY BRANCH CIRCUITS PER PANELBOARD SCHEDULE AND THIS DRAWING. COORDINATE WITH COR. TAG OTHER LOADS IF ANY THAT WILL REMAIN ON 120V AND RE-CIRCUIT TO EXISTING PANELBOARD.

B. REFER TO SHEET E801 FOR LIGHTING FIXTURE SCHEDULE.

C. NEW OCCUPANCY SENSORS AND OVERRIDE SWITCHES TO BE INSTALLED.

SHEET NOTES

1. PROVIDE AND INSTALL NEW LED 2 TUBE EQUIVALENT LUMINAIRE IN THE SAME LOCATION/HEIGHT TO MATCH EXISTING. RECONNECT FIXTURES TO EXISTING CIRCUIT. ALL LUMINAIRE SHALL BE SUPPORTED PROPERLY TO STRUCTURE ABOVE.
2. PROVIDE AND INSTALL NEW LED 2 TUBE EQUIVALENT LUMINAIRE. ALL LUMINAIRE SHALL BE SUPPORTED PROPERLY TO STRUCTURE ABOVE.
3. INSTALL NEW LUMINAIRE AS AN EMERGENCY LIGHTING CIRCUIT.

KEY PLAN:

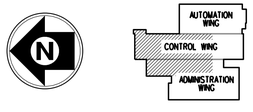

REV	APPROVED DATE	DESCRIPTION	JCN	REDLINE DATE	APVD

DEPARTMENT OF TRANSPORTATION
FEDERAL AVIATION ADMINISTRATION
ATO - TECHNICAL OPERATIONS — WESTERN SERVICE AREA

ARTCC

MAJOR MECHANICAL MODERNIZATION BASEMENT ROOM B88/B101/B102 LIGHTING PLAN

DENVER — LONGMONT — CO

REVIEWED BY	SUBMITTED BY: PAUL TULENKO (DO NOT SIGN) — PROJECT ENGINEER	APPROVED BY: CALLEN R. COLLINS (DO NOT SIGN) — MGR: ENGINEERING - SEATTLE
DESIGNED YM / DRAWN JA / CHECKED	ISSUED BY: ENGINEERING SERVICES ENROUTE/FSS	DATE / JCN 1401893 / DRAWING NO ZDV-1401893-E211 / REV

ISSUED FOR:

rdn-1401893-e211.dgn 6/27/2018 11:22:55 AM John CTR Allen

DGN: zdv-1401893-e211.dgn

DRAWING PRODUCED ON WSA MICROSTATION SYSTEM

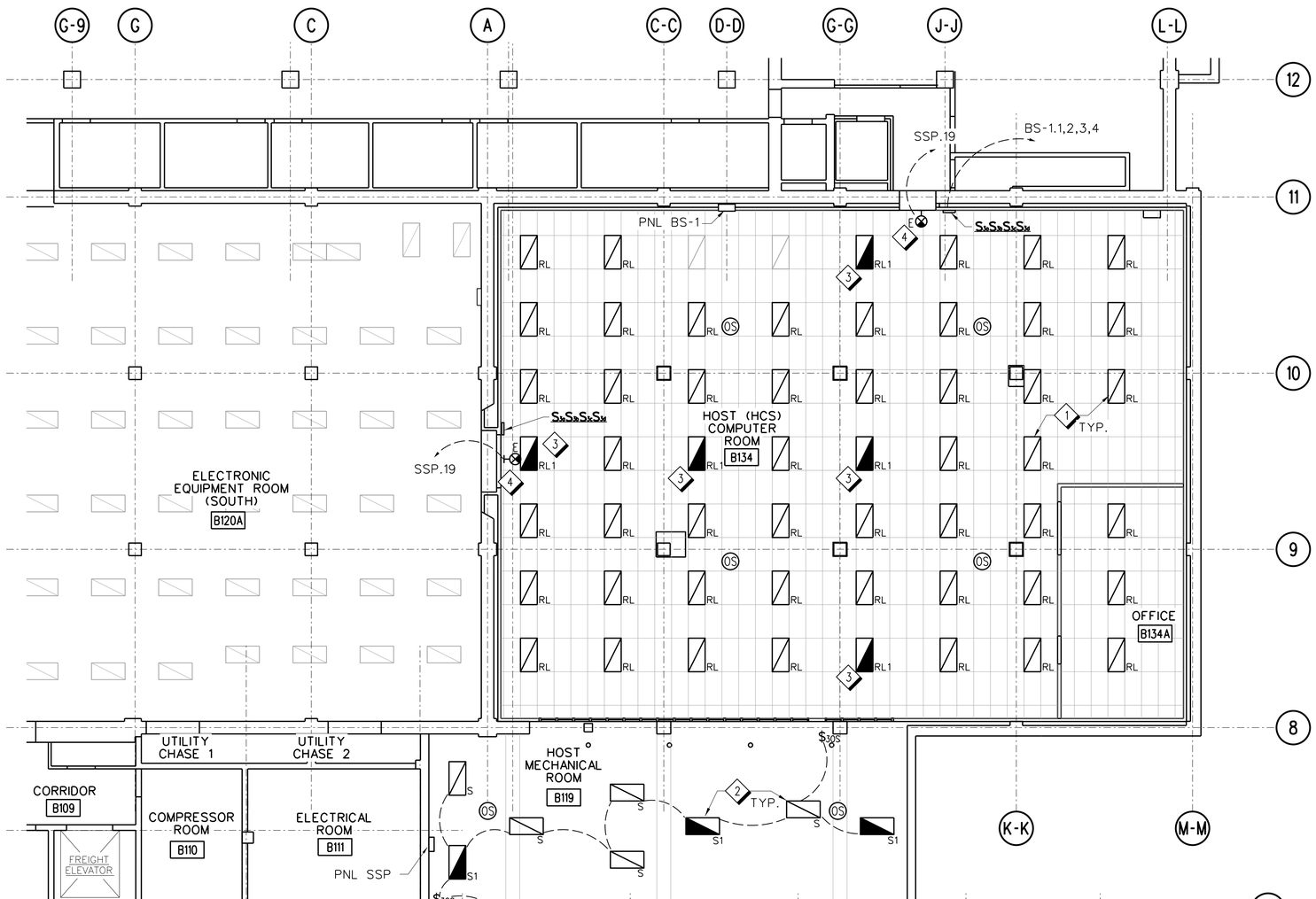

B8 / E212 BASEMENT ROOM B119/B134 LIGHTING PLAN
SCALE: 1/8" = 1'-0"

GENERAL NOTES

A. BRANCH CIRCUIT CONDUIT RUNS ARE DIAGRAMMATIC, CONTRACTOR TO FIELD VERIFY BRANCH CIRCUITS PER PANELBOARD SCHEDULE AND THIS DRAWING. COORDINATE WITH COR. TAG OTHER LOADS IF ANY THAT WILL REMAIN ON 120V AND RE-CIRCUIT TO EXISTING PANELBOARD.

B. REFER TO SHEET E801 FOR LIGHTING FIXTURE SCHEDULE.

C. NEW OCCUPANCY SENSORS AND OVERRIDE SWITCHES TO BE INSTALLED.

SHEET NOTES

1. PROVIDE AND INSTALL T-5 (2-28W) LUMINAIRE. CONNECT TO EXISTING LIGHTING CIRCUIT. ALL LUMINAIRE SHALL BE SUPPORTED PROPERLY TO STRUCTURE ABOVE.
2. PROVIDE AND INSTALL NEW LED 2 TUBE EQUIVALENT LUMINAIRE IN THE SAME LOCATION/HEIGHT TO MATCH EXISTING. RECONNECT FIXTURES TO EXISTING CIRCUIT. ALL LUMINAIRE SHALL BE SUPPORTED PROPERLY TO STRUCTURE ABOVE.
3. PROVIDE AND INSTALL T-5 (2-28W) LUMINAIRE WITH BATTERY PACK.
4. PROVIDE AND INSTALL WALL MOUNTED LED EXIT SIGNS.

KEY PLAN:

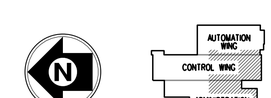

REV	APPROVED DATE	DESCRIPTION	JCN	REDLINE DATE	APVD

DEPARTMENT OF TRANSPORTATION
FEDERAL AVIATION ADMINISTRATION
ATO - TECHNICAL OPERATIONS WESTERN SERVICE AREA

ARTCC

MAJOR MECHANICAL MODERNIZATION
BASEMENT ROOM B119/B134
LIGHTING PLAN

DENVER LONGMONT CO

REVIEWED BY

SUBMITTED BY: PAUL TULENKO — PROJECT ENGINEER
APPROVED BY: CALLEN R. COLLINS — MGR: ENGINEERING - SEATTLE

DESIGNED YM
DRAWN JA
CHECKED

ISSUED BY: ENGINEERING SERVICES ENROUTE/FSS

DATE
JCN 1401893
DRAWING NO ZDV-1401893-E212
REV

ISSUED FOR:

DO NOT SIGN

SCALE: 1/8" = 1'-0"

DRAWING PRODUCED ON WSA MICROSTATION SYSTEM

EDM: zdv-1401893-e212.dgn

rd-1401893-e212.dgn 6/27/2018 1:12:49 AM John CTR Allen

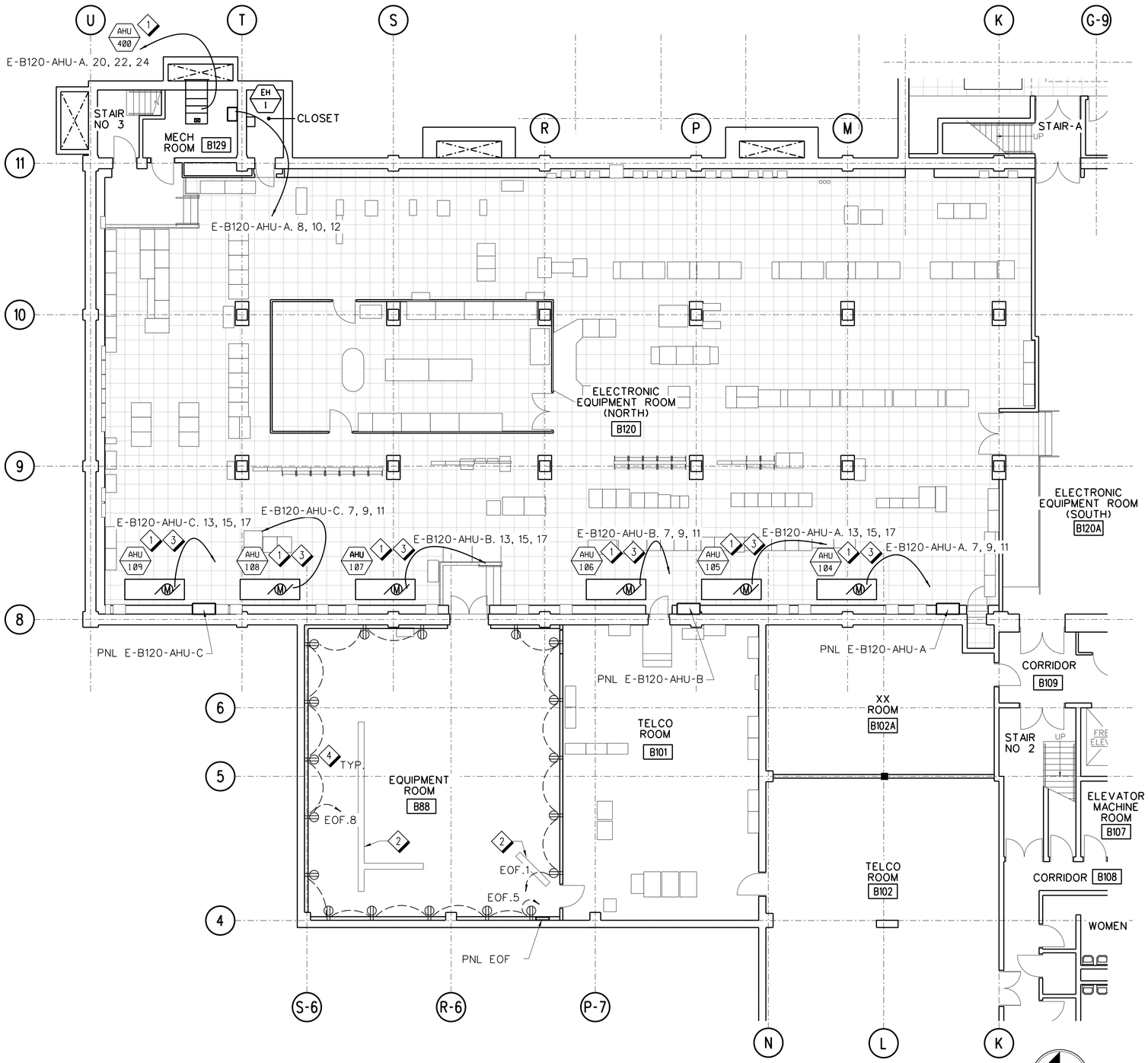

A8 / E213 BASEMENT ROOM B88/B120/B129 POWER PLAN
SCALE: 1/8" = 1'-0"

GENERAL NOTES

A. BRANCH CIRCUIT CONDUIT RUNS ARE DIAGRAMMATIC, CONTRACTOR TO FIELD VERIFY BRANCH CIRCUITS PER PANELBOARD SCHEDULE AND THIS DRAWING. COORDINATE WITH COR. TAG OTHER LOADS IF ANY THAT WILL REMAIN ON 120V AND RE-CIRCUIT TO EXISTING PANELBOARD.

B. INSTALL NEW DISCONNECT SWITCH FOR ALL AHU UNITS.

SHEET NOTES

1. INSTALL NEW AHU-104 THROUGH AHU-109 AND AHU-400 AS SHOWN ON PLAN.
2. EXISTING FLOOR ELECTRICAL TRENCH FOR FUTURE PHONE AND LAN ROUTING.
3. PROVIDE (3) #10, (1) #10 GND FROM AHU-104 THROUGH AHU-109 TO THE PANEL SOURCES.
4. PROVIDE DUPLEX RECEPTACLES IN 4"x4" J-BOX 36" AFF, 8'-0" O.C. AROUND PERIMETER WALLS IN EQUIPMENT ROOM AREA.

KEY PLAN:

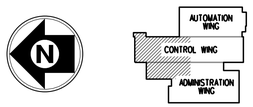

REV	APPROVED DATE	DESCRIPTION	JCN	REDLINE DATE	APVD

DEPARTMENT OF TRANSPORTATION
FEDERAL AVIATION ADMINISTRATION
ATO - TECHNICAL OPERATIONS WESTERN SERVICE AREA

ARTCC
MAJOR MECHANICAL MODERNIZATION
BASEMENT ROOM B88/B120/B129
POWER PLAN

DENVER LONGMONT CO

REVIEWED BY
SUBMITTED BY: PAUL TULENKO — PROJECT ENGINEER
APPROVED BY: CALLEN R. COLLINS — MGR: ENGINEERING - SEATTLE
DO NOT SIGN

DESIGNED YM	ISSUED BY ENGINEERING SERVICES ENROUTE/FSS	DATE	JCN 1401893
DRAWN JA		DRAWING NO ZDV-1401893-E213	REV
CHECKED			

ISSUED FOR:

DRAWING PRODUCED ON WSA MICROSTATION SYSTEM

zdv-1401893-e213.dgn 7/12/2018 10:17:13 AM John CTR Allen

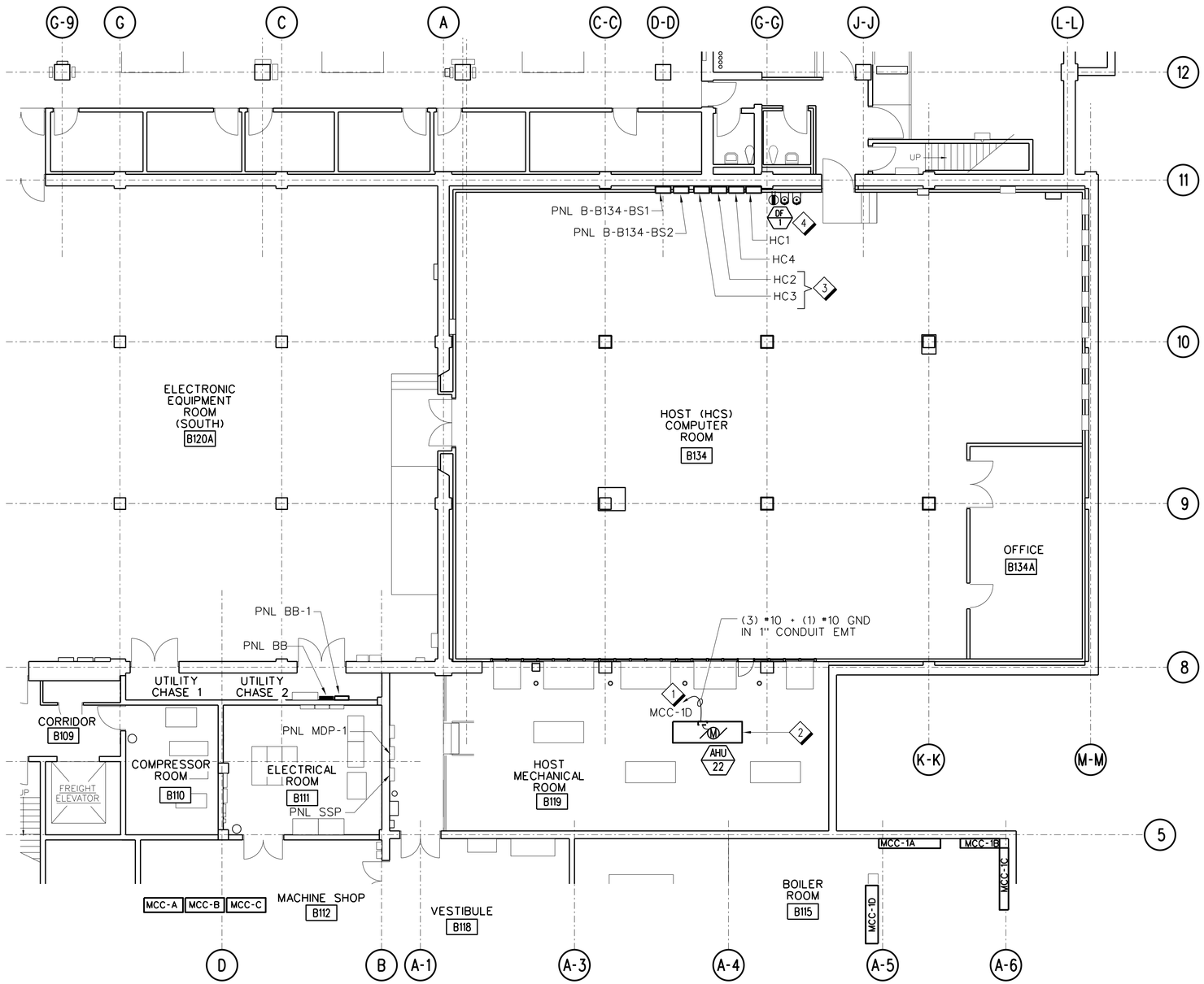

B8 / E214 BASEMENT ROOM B119/B134 POWER PLAN
SCALE: 1/8" = 1'-0"

8' 0 8' 16'
SCALE: 1/8" = 1'-0"

GENERAL NOTES

A. BRANCH CIRCUIT CONDUIT RUNS ARE DIAGRAMMATIC, CONTRACTOR TO FIELD VERIFY BRANCH CIRCUITS PER PANELBOARD SCHEDULE AND THIS DRAWING. COORDINATE WITH COR. TAG OTHER LOADS IF ANY THAT WILL REMAIN ON 120V AND RE-CIRCUIT TO EXISTING PANELBOARD.

SHEET NOTES

1. INSTALL NEW AHU-22 AS SHOWN ON PLAN. USE EXISTING CONDUCTORS FROM MCC-1B AS PULL WIRES INTO HOST MECHANICAL ROOM B119. EXTEND CONDUIT AS NEEDED TO THE LOCATION OF AHU-22. PROVIDE (3) #10, (1) #10 GND FROM AHU-22 TO MCC-1D.
2. PROVIDE NEW CONDUIT AND WIRING FROM MCC TO REPLACEMENT UNIT.
3. RECONDITION PANELS HC2 AND HC3. PROVIDE POWER PARAGON TRANSFER SWITCHES, BUS BARS AND PANEL BOARD COVER. POWER PARAGON TRANSFER SWITCHES WILL BE PROVIDED BY GFE (GOVERNMENT FURNISHED EQUIPMENT).
4. PROVIDE GFCI RECEPTICLE FOR WATER COOLER USING EXISTING CONDUCTORS.

KEY PLAN:

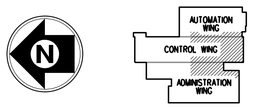

REV	APPROVED DATE	DESCRIPTION	JCN	REDLINE DATE	APVD

DEPARTMENT OF TRANSPORTATION
FEDERAL AVIATION ADMINISTRATION
ATO - TECHNICAL OPERATIONS WESTERN SERVICE AREA

ARTCC

MAJOR MECHANICAL MODERNIZATION BASEMENT ROOM B119/B134 POWER PLAN

DENVER LONGMONT CO

REVIEWED BY	SUBMITTED BY: PAUL TULENKO (DO NOT SIGN)	APPROVED BY: CALLEN R. COLLINS (DO NOT SIGN)
	PROJECT ENGINEER	MGR: ENGINEERING - SEATTLE
DESIGNED YM	ISSUED BY: ENGINEERING SERVICES ENROUTE/FSS	DATE / JCN 1401893
DRAWN JA		DRAWING NO ZDV-1401893-E214 / REV
CHECKED		

ISSUED FOR:

rdp-1401893-e214.dgn 7/3/2018 11:25:02 AM John CTR Allen

EDM: zdv-1401893-e214.dgn

DRAWING PRODUCED ON WSA MICROSTATION SYSTEM

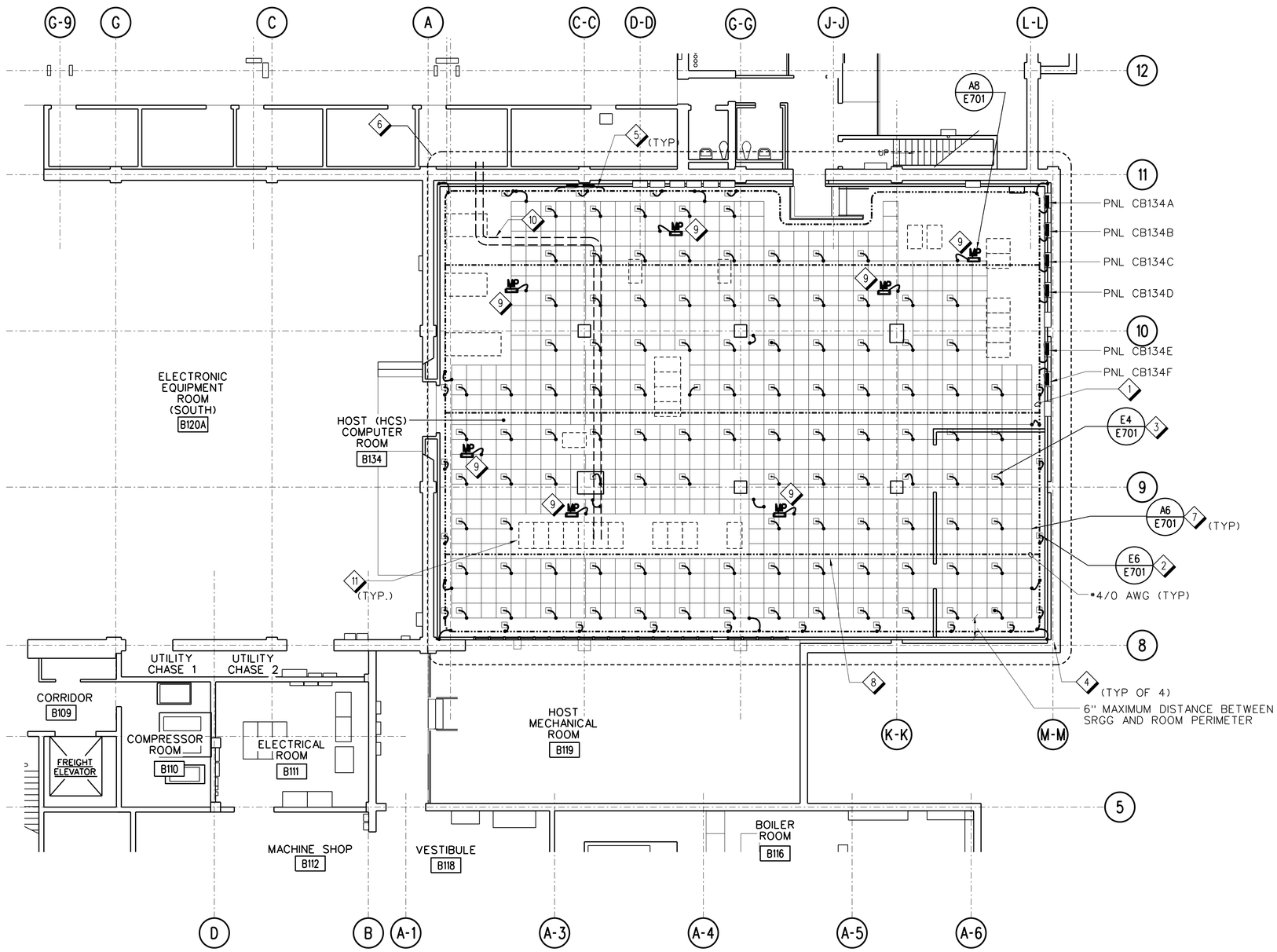

B8 / E215 BASEMENT ROOM B134 GROUNDING PLAN
SCALE: 1/8" = 1'-0"

8' 0 8' 16'
SCALE: 1/8" = 1'-0"

GENERAL NOTES

A. PROTECT ALL EQUIPMENT, CONDUITS, WIRING, DUCTBANKS, ETC. DURING EXOTHERMIC WELDING.

B. MECHANICAL DUCTS, PIPING, ELECTRICAL, MECHANICAL EQUIPMENT AND OTHER METALLIC EQUIPMENT IN ROOMS WITH RAISED FLOORS SHOWN IN THIS DRAWING SHALL BE BONDED TO THE PERIMETER GROUND CONDUCTOR WITH #4 BARE COPPER CONDUCTOR.

C. CONNECT PERIMETER GROUND LOOP CONDUCTOR TO ACCESSIBLE STEEL BUILDING COLUMNS LOCATED WITHIN 6 FEET OF PERIMETER CONDUCTOR LOOP WITH #4/0 AWG OR LARGER CONDUCTOR VIA EXOTHERMIC WELD.

SHEET NOTES

1. EXISTING #4/0 AWG BARE COPPER PERIMETER GROUND CONDUCTOR BELOW RAISED FLOOR. FASTEN TO CONCRETE WALL/FLOOR WITH CLIPS EVERY 3 FEET.
2. PROVIDE BONDING FROM PERIMETER GROUND LOOP TO PEDESTALS WITH #4 AWG COPPER CONDUCTOR AT EVERY 10 FEET INTERVALS.
3. CONNECT EVERY THIRD FLOOR PEDESTAL TO SRGG USING #4 BARE COPPER CONDUCTOR.
4. PROVIDE BONDING FROM PERIMETER GROUND LOOP TO BUILDING STEEL WITH #4/0 AWG BARE COPPER CONDUCTOR.
5. PROVIDE BONDING BETWEEN EXISTING PANEL ENCLOSURE AND CONDUITS/ CABLE ACCESS BOX TO EXISTING PERIMETER GROUND LOOP WITH #4 AWG BARE COPPER CONDUCTOR. REFER TO DRAWING E701 FOR GROUNDING DETAIL.
6. PROVIDE SRGG SYSTEM UNDER RAISED FLOOR. INSTALLATION OF SRGG AND ASSOCIATED GROUNDING SHALL BE DONE BY CONTRACTOR.
7. SRGG SHALL BE BONDED TO THE PERIMETER #4/0 AWG BARE COPPER CONDUCTOR AT EVERY GRID INTERSECTION WITH #4 AWG BARE COPPER CONDUCTOR.
8. PROVIDE BONDING FROM SRGG TO MULTIPOINT GROUND WITH #4 AWG BARE COPPER CONDUCTOR.
9. BOND EXISTING MULTIGROUND PLATES TO SRGG. COORDINATE WITH COR FOR EXACT LOCATIONS OF EXISTING MULTIGROUND PLATES.
10. COORDINATE WITH COR FOR EXACT LOCATION OF CABLE TRAY.
11. FAA PERSONNEL TO CONNECT EQUIPMENT TO THE SIGNAL REFERENCE GROUND PLANE BEFORE REMOVING EXISTING MULTI GROUND BAR.

KEY PLAN:

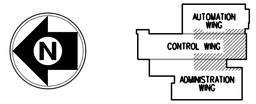

REV	APPROVED DATE	DESCRIPTION	JCN	REDLINE DATE	APVD

DEPARTMENT OF TRANSPORTATION
FEDERAL AVIATION ADMINISTRATION
ATO - TECHNICAL OPERATIONS — WESTERN SERVICE AREA

ARTCC

MAJOR MECHANICAL MODERNIZATION BASEMENT ROOM B134 GROUNDING PLAN

DENVER — LONGMONT — CO

REVIEWED BY

SUBMITTED BY: PAUL TULENKO — PROJECT ENGINEER

APPROVED BY: CALLEN R. COLLINS — MGR: ENGINEERING - SEATTLE

DO NOT SIGN

DESIGNED: YM
DRAWN: JA
CHECKED:

ISSUED BY: ENGINEERING SERVICES ENROUTE/FSS

DATE:
JCN: 1401893
DRAWING NO: ZDV-1401893-E215
REV:

ISSUED FOR:

DRAWING PRODUCED ON WSA MICROSTATION SYSTEM

zdv-1401893-e215.dgn 6/27/2018 11:33:59 AM John CTR Allen

EDM: zdv-1401893-e215.dgn

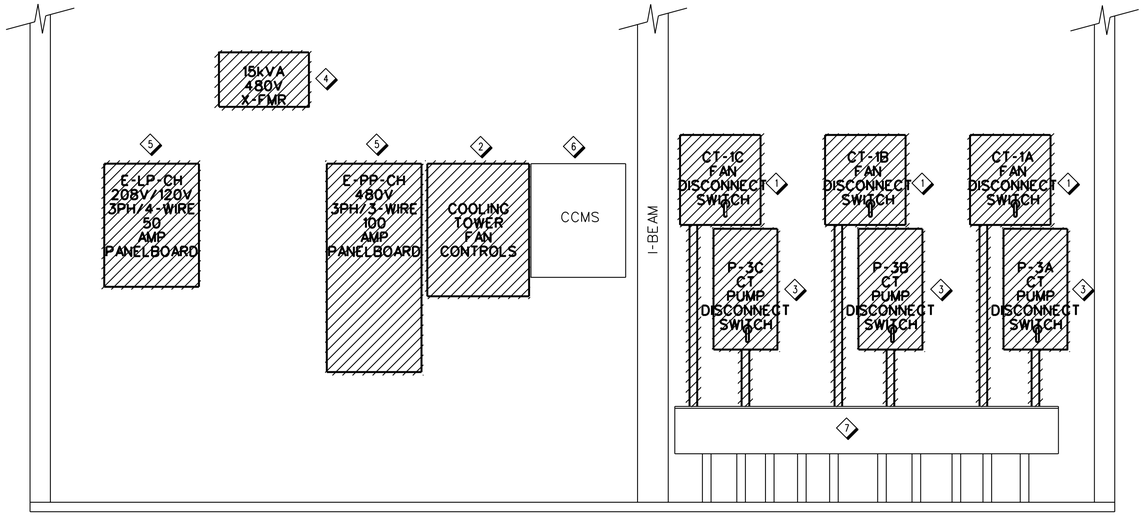

A7 / E301 PUMP HOUSE NORTH WALL - DEMOLITION

NTS

GENERAL SHEET NOTES:

A. REFER TO SPECIFICATION AND GENERAL NOTES ABOUT DEMOLITION INCLUDING ASBESTOS, LEAD AND PCB ABATEMENT ON GENERAL AND ARCHITECTURAL DRAWINGS.

B. BRANCH CIRCUIT CONDUIT RUNS ARE DIAGRAMMATIC, CONTRACTOR TO FIELD VERIFY BRANCH CIRCUITS PER PANELBOARD SCHEDULE AND THIS DRAWING.

C. MAINTAIN CONTINUITY TO AREAS NOT AFFECTED BY DEMOLITION OR PROVIDE TEMPORARY POWER IN AREAS WHERE THE COR/RE DETERMINES THAT IT IS REQUIRED. ONLY ONE COOLING TOWER SHALL BE TAKEN OUT OF SERVICE AND REPLACED AT A TIME. REMAINING COOLING TOWERS SHALL BE OPERATIONAL AT ALL TIMES. ELECTRICAL WORK SHALL MATCH MECHANICAL PHASING PLAN AS REQUIRED.

SHEET NOTES:

1. DEMOLISH COOLING TOWER E-STOP SWITCH, CONDUIT AND CONDUCTORS BACK TO THE PULL BOX.
2. DEMOLISH COOLING TOWER FAN FAN CONTROL PANEL AND DISCONNECT SWITCH LOCATED AT THE FAN.
3. DEMOLISH COOLING TOWER PUMP DISCONNECT SWITCH, CONDUIT AND CONDUCTORS BACK TO THE PULL BOX.
4. DEMOLISH TRANSFORMER.
5. DEMOLISH PANELS PP-CH AND LP-CH.
6. CCMS PANEL TO REMAIN.
7. EXISTING RACEWAY TROUGH TO REMAIN.

REV	APPROVED DATE	DESCRIPTION	JCN	REDLINE DATE	APVD

DEPARTMENT OF TRANSPORTATION
FEDERAL AVIATION ADMINISTRATION
ATO - TECHNICAL OPERATIONS WESTERN SERVICE AREA

ARTCC

MAJOR MECHANICAL MODERNIZATION COOLING TOWER AND PUMP HOUSE DISCONNECT SWITCH AND VFD ELEVATIONS

DENVER LONGMONT CO

REVIEWED BY

SUBMITTED BY: PAUL TULENKO — PROJECT ENGINEER

APPROVED BY: CALLEN R. COLLINS — MGR: ENGINEERING - SEATTLE

DO NOT SIGN

DESIGNED TL

DRAWN JA

CHECKED

ISSUED BY: ENGINEERING SERVICES ENROUTE/FSS

DATE

JCN 1401893

DRAWING NO ZDV-1401893-E301

REV

ISSUED FOR:

DRAWING PRODUCED ON WSA MICROSTATION SYSTEM

zdv-1401893-e301.dgn 6/29/2018 10:34:05 AM John CTR Allen

EDM: zdv-1401893-e301.dgn

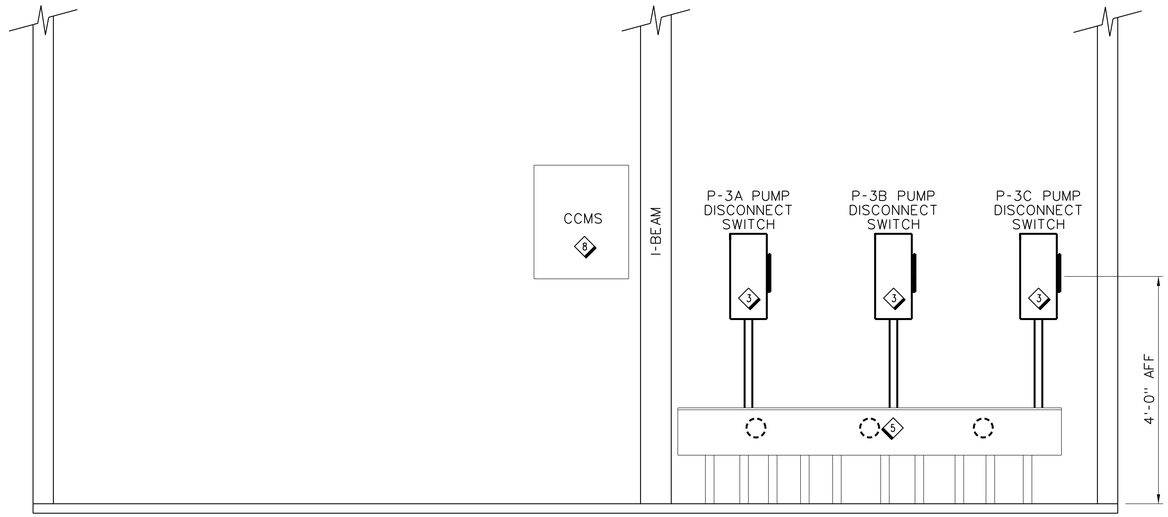

E7 / E302 PUMP HOUSE NORTH WALL - NEW WORK
NTS

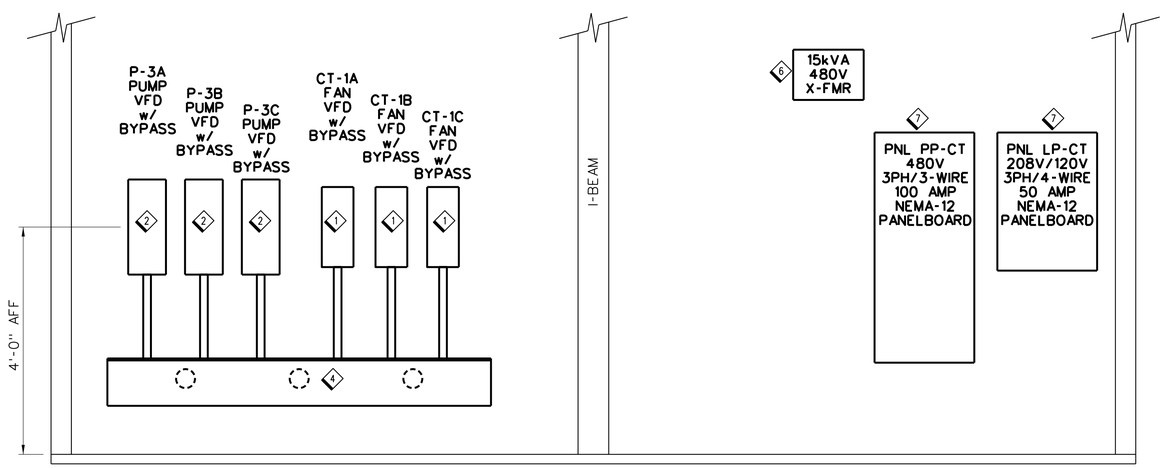

A7 / E302 PUMP HOUSE ELECTRICAL ADDITION, SOUTH WALL - NEW WORK
NTS

GENERAL SHEET NOTES:

A. REFER TO SPECIFICATION AND GENERAL NOTES ABOUT DEMOLITION INCLUDING ASBESTOS, LEAD AND PCB ABATEMENT ON GENERAL AND ARCHITECTURAL DRAWINGS.

B. BRANCH CIRCUIT CONDUIT RUNS ARE DIAGRAMMATIC, CONTRACTOR TO FIELD VERIFY BRANCH CIRCUITS PER PANELBOARD SCHEDULE AND THIS DRAWING.

C. MAINTAIN CONTINUITY TO AREAS NOT AFFECTED BY DEMOLITION OR PROVIDE TEMPORARY POWER IN AREAS WHERE THE COR/RE DETERMINES THAT IT IS REQUIRED. ONLY ONE COOLING TOWER SHALL BE TAKEN OUT OF SERVICE AND REPLACED AT A TIME. REMAINING COOLING TOWERS SHALL BE OPERATIONAL AT ALL TIMES. ELECTRICAL WORK SHALL MATCH MECHANICAL PHASING PLAN AS REQUIRED.

SHEET NOTES:

1. PROVIDE NATIVE BACNET COMPLIANT, NEMA 12 RATED, VFD W/ INTEGRAL DISCONNECTING MEANS. RE-USE RACEWAY AND CONDUCTORS FROM MCC TO PULL BOX AT NEW COOLING TOWER. PROVIDE RACEWAY AND CONDUCTORS FROM VFD TO COOLING TOWER FAN MOTOR. PROVIDE A NEMA 3R (MINIMUM) RATED DISCONNECTING MEANS TO BE LOCATED AT THE FAN MOTOR. TO PREVENT DAMAGE TO THE VFD, THE DISCONNECTING MEANS SHALL UTILIZE A VERIFIED, FAST ACTING, BREAK-BEFORE-BREAK AUXILLARY CONTACT TO SIGNAL THE VFD THAT THE DISCONNECTING MEANS IS BEING TURNED OFF SO THAT THE VFD MAY EXECUTE A COAST-TO-STOP.
2. PROVIDE NATIVE BACNET COMPLIANT, NEMA 12 RATED, VFD W/ INTEGRAL DISCONNECTING MEANS. RE-USE RACEWAY AND CONDUCTORS FROM MCC TO PULL BOX AT PUMP. PROVIDE RACEWAY AND CONDUCTORS FROM VFD TO PUMP MOTOR.
3. PROVIDE A NEMA 3R (MINIMUM) RATED DISCONNECTING MEANS TO BE LOCATED IN PUMP HOUSE. TO PREVENT DAMAGE TO THE VFD, THE DISCONNECTING MEANS SHALL UTILIZE A VERIFIED, FAST ACTING, BREAK-BEFORE-BREAK AUXILLARY CONTACT TO SIGNAL THE VFD THAT THE DISCONNECTING MEANS IS BEING TURNED OFF SO THAT THE VFD MAY EXECUTE A COAST-TO-STOP.
4. PROVIDE NEMA 1 STEEL WIREWAY IN ELECTRICAL ADDITION, STUBBED THROUGH WALL FROM EXISTING RACEWAY. MOUNT TO MATCH HEIGHT OF EXISTING RACEWAY IN PUMP HOUSE.
5. STUB THROUGH WALL FROM EXISTING RACEWAY TO NEW RACEWAY IN ELECTRICAL ADDITION.
6. PROVIDE TRANSFORMER.
7. PROVIDE NEMA 12 PANELBOARDS. PROVIDE TEMPORARY POWER FOR BRANCH CIRCUITS AS DESIGNATED BY COR.
8. EXISTING CCMS PANEL TO REMAIN.

REV	APPROVED DATE	DESCRIPTION	JCN	REDLINE DATE	APVD

DEPARTMENT OF TRANSPORTATION
FEDERAL AVIATION ADMINISTRATION
ATO - TECHNICAL OPERATIONS — WESTERN SERVICE AREA

ARTCC

MAJOR MECHANICAL MODERNIZATION
COOLING TOWER AND PUMP HOUSE
DISCONNECT SWITCH AND VFD ELEVATIONS

DENVER — LONGMONT — CO

REVIEWED BY

SUBMITTED BY: PAUL TULENKO — PROJECT ENGINEER
APPROVED BY: CALLEN R. COLLINS — MGR: ENGINEERING - SEATTLE

DO NOT SIGN

DESIGNED: TL
DRAWN: JA
CHECKED:

ISSUED BY: ENGINEERING SERVICES ENROUTE/FSS

DATE:
JCN: 1401893
DRAWING NO: ZDV-1401893-E302
REV:

ISSUED FOR:

rsb-1401893-e302.dgn 6/28/2018 10:35:09 AM John CTR Allen

EDM: zdv-1401893-e302.dgn

DRAWING PRODUCED ON WSA MICROSTATION SYSTEM

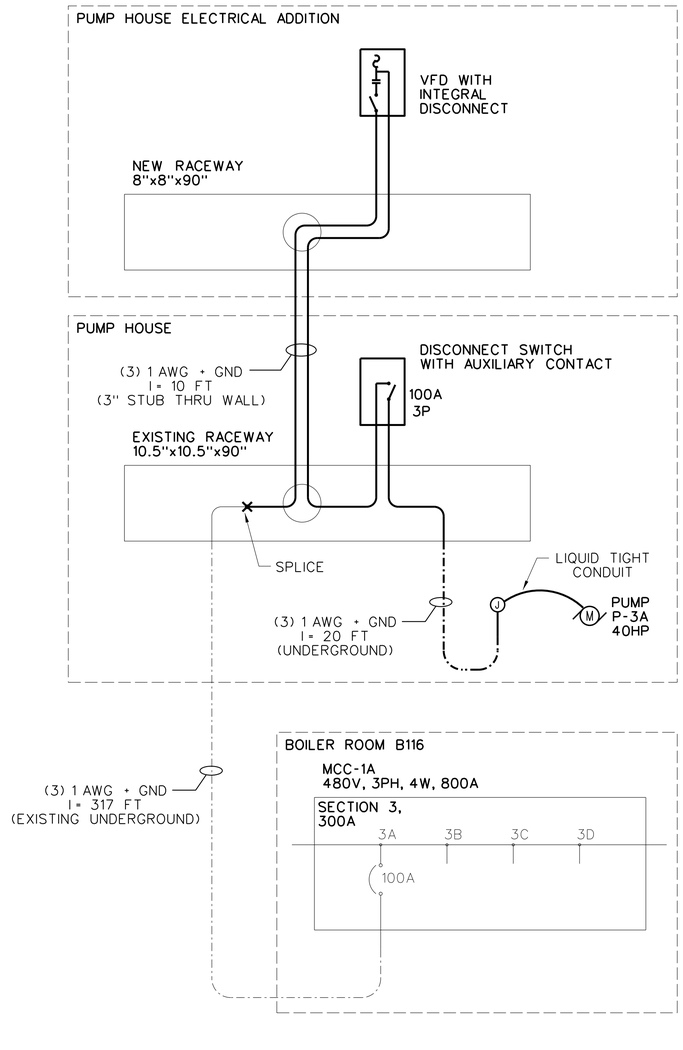

C8 E303 CONDENSER PUMP SINGLE LINE DIAGRAM
NO SCALE

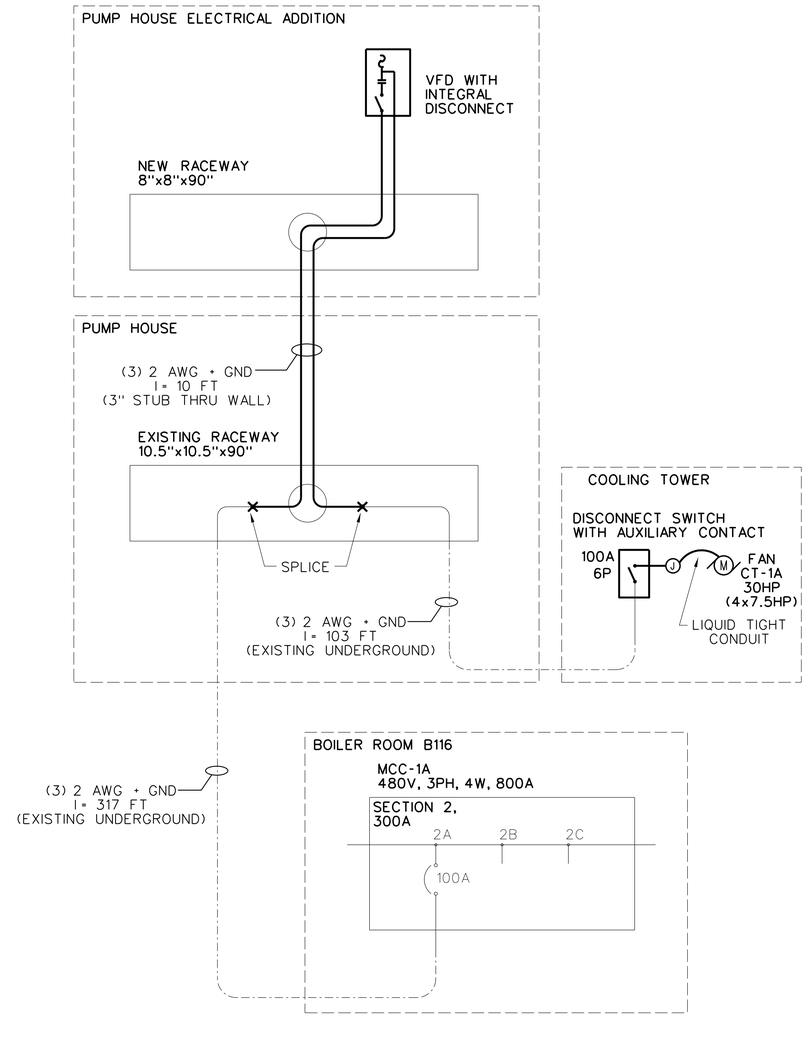

C5 E303 COOLING TOWER FAN SINGLE LINE DIAGRAM
NO SCALE

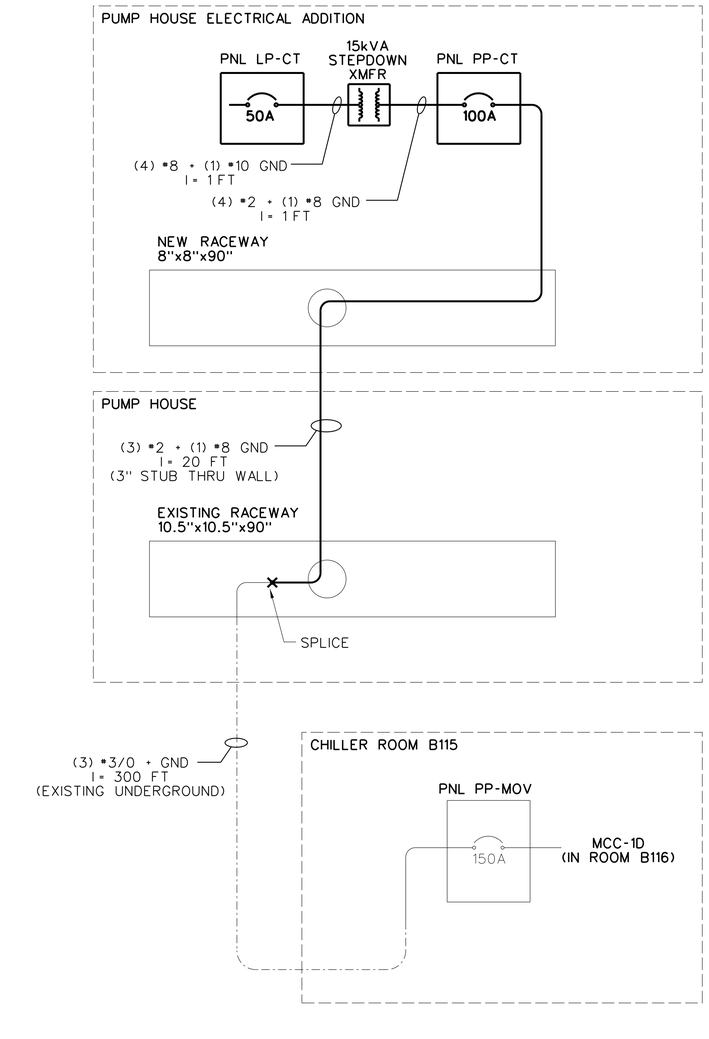

C3 E303 PUMP HOUSE POWER PANEL SINGLE LINE DIAGRAM
NO SCALE

REV	APPROVED DATE	DESCRIPTION	JCN	REDLINE DATE	APVD

DEPARTMENT OF TRANSPORTATION
FEDERAL AVIATION ADMINISTRATION
ATO - TECHNICAL OPERATIONS — WESTERN SERVICE AREA

ARTCC

MAJOR MECHANICAL MODERNIZATION
COOLING TOWER AND PUMP HOUSE
SINGLE LINE DIAGRAMS

DENVER — LONGMONT — CO

REVIEWED BY

SUBMITTED BY: DO NOT SIGN — PAUL TULENKO — PROJECT ENGINEER

APPROVED BY: DO NOT SIGN — CALLEN R. COLLINS — MGR: ENGINEERING - SEATTLE

DESIGNED: TL
DRAWN: JA
CHECKED:

ISSUED BY: ENGINEERING SERVICES ENROUTE/FSS

DATE:
JCN: 1401893
DRAWING NO: ZDV-1401893-E303
REV:

ISSUED FOR:

rsk-1401893-e303.dgn 6/27/2018 11:33:14 AM John CTR Allen

EDM: zdv-1401893-e303.dgn

DRAWING PRODUCED ON WSA MICROSTATION SYSTEM

MCC-A - NEW CONFIGURATION

1200A MAIN HORIZONTAL BUS

FRONT / REAR

SECTION 1	SECTION 2	SECTION 2	SECTION 1
800A Line 800A Neut	600A Line 600A Neut		
1AF	2AF BLANK		
500A MCC-1A	2BF 300A PANEL E-12-A	2AR BLANK	1AR BLANK
		2BR BLANK	1BR BLANK
1BF BLANK	2CF 225A DPD	2CR 200A E-300-3A	1CR BLANK
1CF BLANK			1DR BLANK
1DF 150A SPARE	2DF 100A E120AA	ACC-2 2DR 150A FIRE SYS AIR COMPRESSOR	1ER BLANK
	2EF BLANK	2ER BLANK	
UNUSABLE	UNUSABLE	UNUSABLE	UNUSABLE

277/480V 3PH 4-WIRE 60HZ
A=YELLOW, B=BROWN, C=ORANGE
FED FROM E-BUS: E52-3

MCC-1A - NEW CONFIGURATION

800A MAIN HORIZONTAL BUS

SECTION 1	SECTION 2	SECTION 3	SECTION 4
300A VERTICAL BUS	300A VERTICAL BUS	300A VERTICAL BUS	300A VERTICAL BUS
1A	2A 100A FAN CT-1A (4) 7.5HP	3A 100A PUMP P-3A 40HP	4A
1B 150A PNL DPA			4B 30A BOILER PNL B1A
1C 125A PNL AHU-A	2B 200A PUMP P-1A 60HP	3B 100A PNL BC1	4C 50A SPARE
1D 30A SPARE		3C 20A SPARE	4D 30A FAN EF-310
1E	2C	3D	4E 100A E-B111-Z1

277/480V 3PH 4-WIRE 60HZ
A=YELLOW, B=BROWN, C=ORANGE
FED FROM MCC-A: CB 1AF

MCC-A AND MCC-1A
DENVER AIR ROUTE TRAFFIC CONTROL CENTER

MCC-B - NEW CONFIGURATION

1200A MAIN HORIZONTAL BUS

FRONT / REAR

SECTION 1	SECTION 2	SECTION 2	SECTION 1
800A Line 800A Neut	600A Line 600A Neut		
1AF	2AF BLANK		
500A MCC-1B	2BF 300A PANEL E-12A-B	2AR BLANK	1AR BLANK
		2BR BLANK	1BR BLANK
1BF BLANK	2CF 225A DPF	2CR 200A E-3003-B	1CR BLANK
1CF BLANK			1DR BLANK
1DF 150A PANEL ELEVATOR	2DF	2DR	1ER BLANK
	2EF BLANK	2ER BLANK	
UNUSABLE	UNUSABLE	UNUSABLE	UNUSABLE

277/480V 3PH 4-WIRE 60HZ
A=YELLOW, B=BROWN, C=ORANGE
FED FROM E-BUS: E52-4

MCC-1B - NEW CONFIGURATION

800A MAIN HORIZONTAL BUS

SECTION 1	SECTION 2	SECTION 3	SECTION 4
300A VERTICAL BUS	300A VERTICAL BUS	300A VERTICAL BUS	300A VERTICAL BUS
1A	2A 100A FAN CT-1B (4) 7.5HP	3A 100A PUMP P-3B 40HP	4A
1B 225A PNL DPB			4B
1C 125A PNL AHU-B	2B 200A PUMP P-1B 60HP	3B 40A PANEL BC	4C 50A SPARE
1D 30A BATT CHRGR 3DCB CP		3C 20A SPARE	4D 30A PANEL AH-320
1E	2C	3D 50A PUMP P-2B 15HP	4E 100A PANEL Z2

277/480V 3PH 4-WIRE 60HZ
A=YELLOW, B=BROWN, C=ORANGE
FED FROM MCC-B: CB 1AF

MCC-B AND MCC-1B
DENVER AIR ROUTE TRAFFIC CONTROL CENTER

REV	APPROVED DATE	DESCRIPTION	JCN	REDLINE DATE	APVD

DEPARTMENT OF TRANSPORTATION
FEDERAL AVIATION ADMINISTRATION
ATO - TECHNICAL OPERATIONS **WESTERN SERVICE AREA**

ARTCC

MAJOR MECHANICAL MODERNIZATION
MCC-A/MCC-1A AND MCC-B/MCC-1B
MOTOR CONTROL CENTER ELEVATIONS

DENVER LONGMONT CO

REVIEWED BY

SUBMITTED BY: PAUL TULENKO — PROJECT ENGINEER

APPROVED BY: CALLEN R. COLLINS — MGR: ENGINEERING - SEATTLE

DESIGNED TL
DRAWN JA
CHECKED

ISSUED BY: ENGINEERING SERVICES ENROUTE/FSS

DATE
JCN 1401893
DRAWING NO ZDV-1401893-E501
REV

ISSUED FOR:

DRAWING PRODUCED ON WSA MICROSTATION SYSTEM

zdv-1401893-e501.dgn 6/27/2018 10:33:43 AM John C?R Allen

EDM: zdv-1401893-e501.dgn

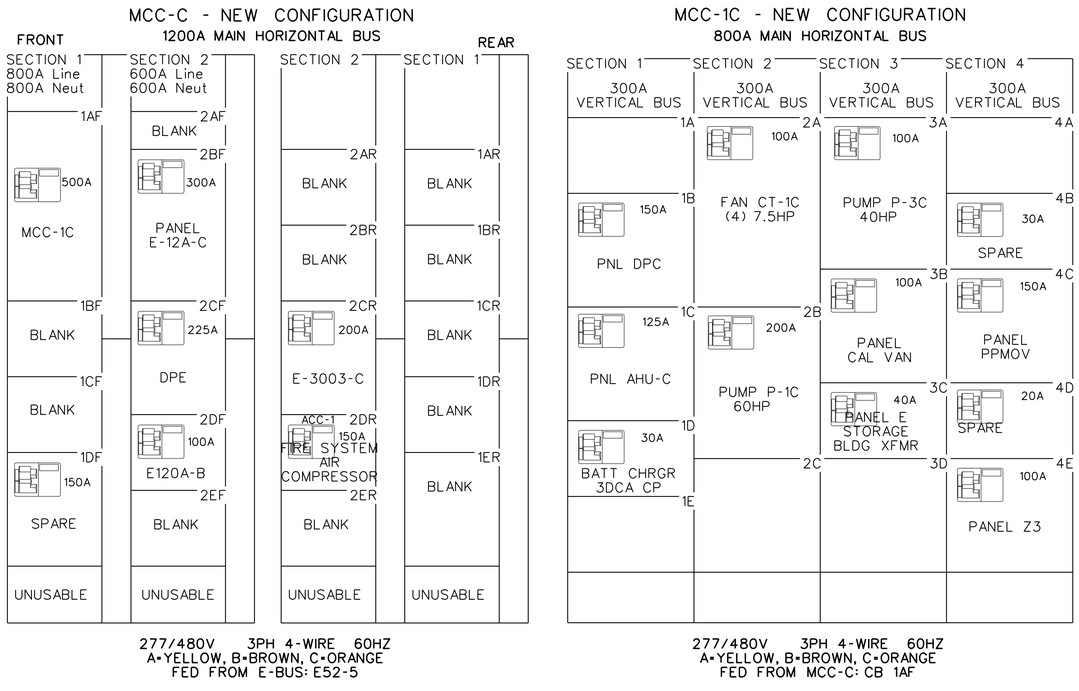

MCC-C AND MCC-1C
DENVER AIR ROUTE TRAFFIC CONTROL CENTER

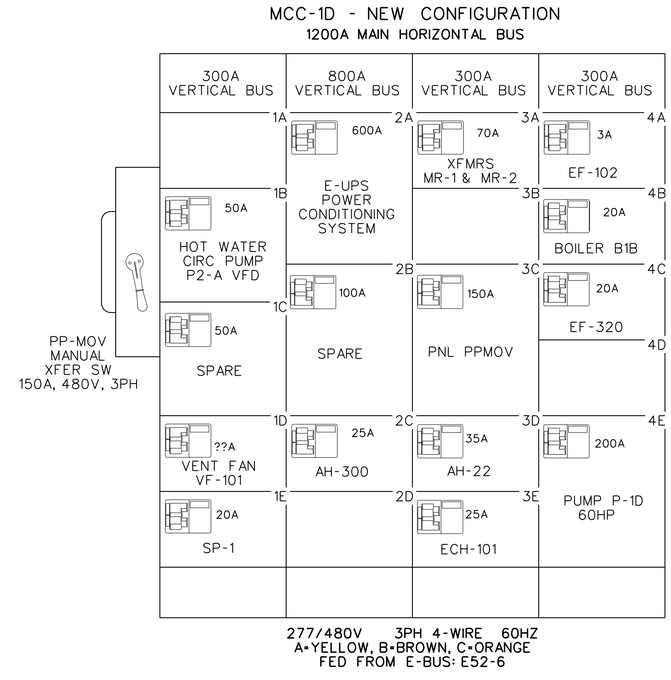

MCC-1D
DENVER AIR ROUTE TRAFFIC CONTROL CENTER

REV	APPROVED DATE	DESCRIPTION	JCN	REDLINE DATE	APVD

DEPARTMENT OF TRANSPORTATION
FEDERAL AVIATION ADMINISTRATION
ATO - TECHNICAL OPERATIONS **WESTERN SERVICE AREA**

ARTCC

MAJOR MECHANICAL MODERNIZATION
MCC-C/MCC-1C AND MCC-1D
MOTOR CONTROL CENTER ELEVATIONS

DENVER LONGMONT CO

REVIEWED BY

SUBMITTED BY: PAUL TULENKO — PROJECT ENGINEER

APPROVED BY: CALLEN R. COLLINS — MGR: ENGINEERING - SEATTLE

DESIGNED TL
DRAWN JA
CHECKED

ISSUED BY: ENGINEERING SERVICES ENROUTE/FSS

DATE
JCN 1401893
DRAWING NO ZDV-1401893-E502
REV

DO NOT SIGN

ISSUED FOR:

zdv-1401893-e502.dgn 6/27/2018 10:34:19 AM John C.R. Allen

EDM: zds-1401893-e502.dgn

DRAWING PRODUCED ON WSA MICROSTATION SYSTEM

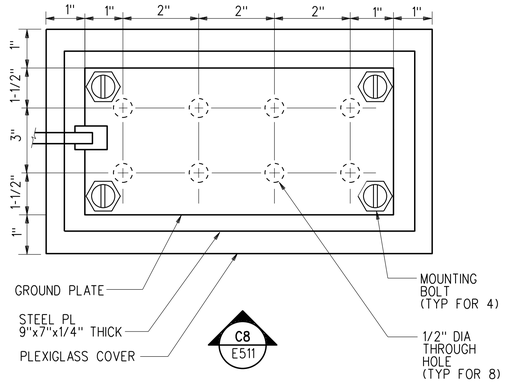

PLAN VIEW

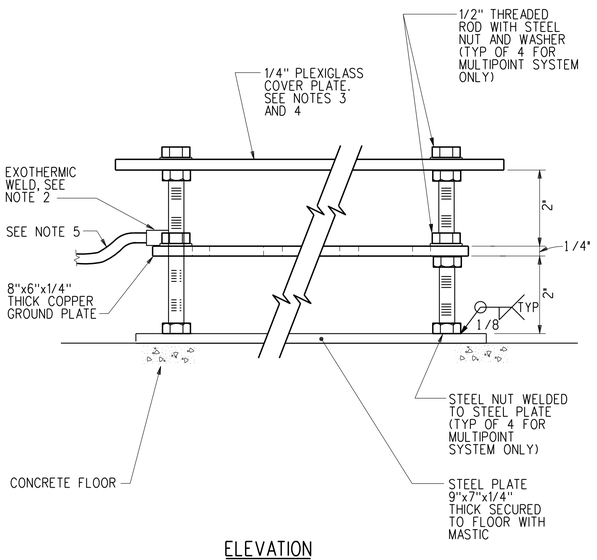

ELEVATION

NOTES:

1. REMOVE ALL BURRS AND SHARP EDGES.
2. GROUND CONDUCTOR IS SHOWN ON ONE END OF GROUND PLATE. INSTALL CONDUCTOR ON BOTH ENDS OF GROUND PLATE WHEN SHOWN ON PLANS.
3. FOR MULTIPOINT PLATE, COVER SHALL HAVE GREEN LABEL WITH ORANGE SLASHES AND SHALL BE PERMANENTLY MARKED "MULTIPOINT GROUND SYSTEM".
5. #4/0 AWG GREEN INSULATED CONDUCTOR WITH ASSOCIATED ORANGE TRACERS FOR MULTIPOINT GROUND SYSTEM.

A8 E511 MULTIPOINT GROUND PLATE
NOT TO SCALE

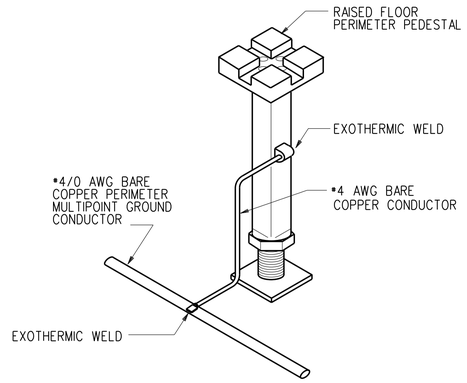

NOTES:

1. GROUND RAISED FLOOR PERIMETER PEDESTAL TO PERIMETER GROUND CONDUCTOR AT 10' INTERVALS.

E6 E511 RAISED FLOOR PERIMETER PEDESTAL GROUNDING
NOT TO SCALE

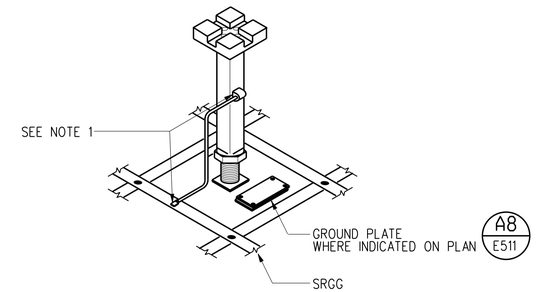

NOTES:

1. BOND EVERY THIRD RAISED FLOOR PEDESTAL IN EACH DIRECTION TO THE SRG USING A #4 AWG BARE COPPER CONDUCTOR AND EXOTHERMIC WELDS.

E4 E511 EQUIPMENT ROOM RAISED FLOOR PEDESTAL GROUNDING
NOT TO SCALE

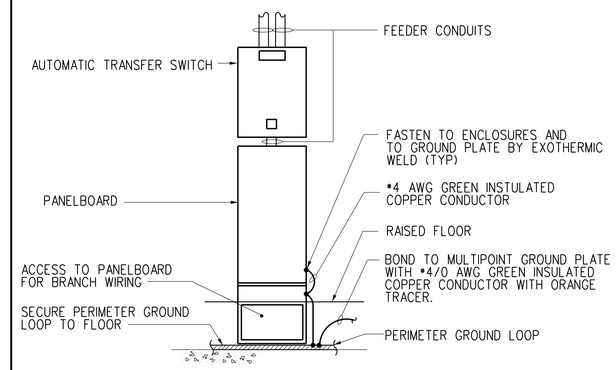

E2 E511 POWER PANEL GROUNDING
NOT TO SCALE

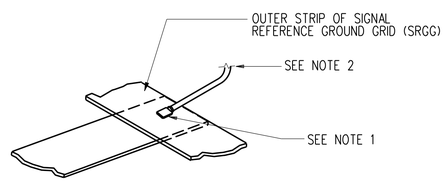

NOTES:

1. BOND #4 AWG BARE COPPER CONDUCTOR TO THE SRGG USING EXOTHERMIC WELD. THE CONDUCTOR SHALL TAKE THE SHORTEST PATH TO THE SRGG WITH LENGTH NOT EXCEEDING 4 FEET.
2. CONNECT SRGG TO MULTIPOINT PERIMETER GROUND CONDUCTOR AT EVERY GRID INTERSECTION.

A6 E511 GROUND CONNECTION TO SRGG
NOT TO SCALE

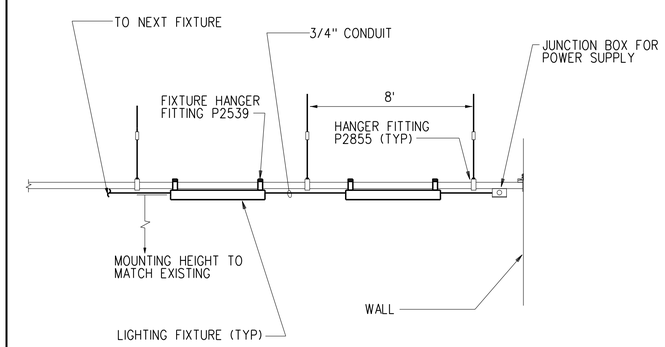

NOTES:

1. PART NUMBERS SHOWN IN THE FIXTURE MOUNTING DETAIL ARE AS MANUFACTURED BY UNISTRUT AND MAY BE SUBSTITUTED FOR APPROVED EQUAL.

A4 E511 FIXTURE MOUNTING DETAIL ON EXISTING SUPPORT SYSTEM
NOT TO SCALE

REV	APPROVED DATE	DESCRIPTION	JCN	REDLINE DATE	APVD

DEPARTMENT OF TRANSPORTATION
FEDERAL AVIATION ADMINISTRATION
ATO - TECHNICAL OPERATIONS WESTERN SERVICE AREA

ARTCC
MAJOR MECHANICAL MODERNIZATION
ELECTRICAL DETAILS

DENVER LONGMONT CO

REVIEWED BY
SUBMITTED BY: PAUL TULENKO (DO NOT SIGN)
PROJECT ENGINEER
APPROVED BY: CALLEN R. COLLINS (DO NOT SIGN)
MGR: ENGINEERING - SEATTLE
DESIGNED YM
DRAWN JA
CHECKED
ISSUED BY: ENGINEERING SERVICES ENROUTE/FSS
DATE
JCN 1401893
DRAWING NO ZDV-1401893-E511
REV

ISSUED FOR:

zdv-1401893-e511.dgn 6/27/2018 11:34:48 AM John CTR Allen

EDM: zdv-1401893-e511.dgn

DRAWING PRODUCED ON WSA MICROSTATION SYSTEM

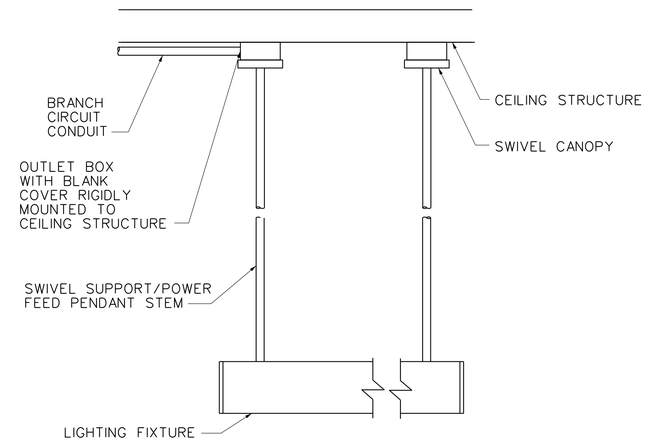

NOTE

1. INSTALLATION AND SUPPORT OF LIGHTING FIXTURES TO MEET LOCAL SEISMIC REQUIREMENTS.

E8 / E512 INDUSTRIAL LIGHTING FIXTURE SUPPORT AND POWER FEED SYSTEM
NTS

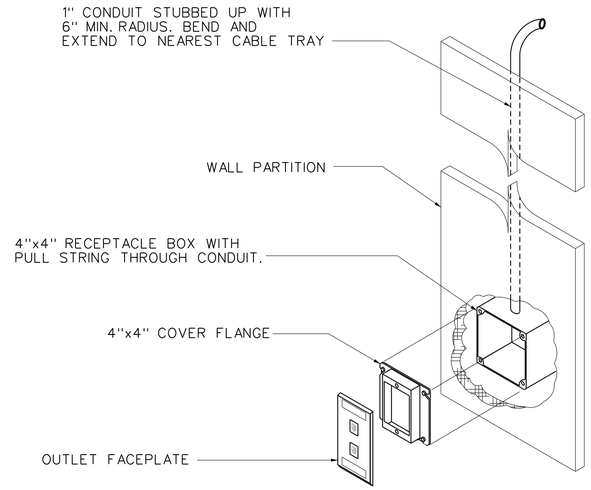

E6 / E512 TYPICAL WALL CABLE SYSTEM
NTS

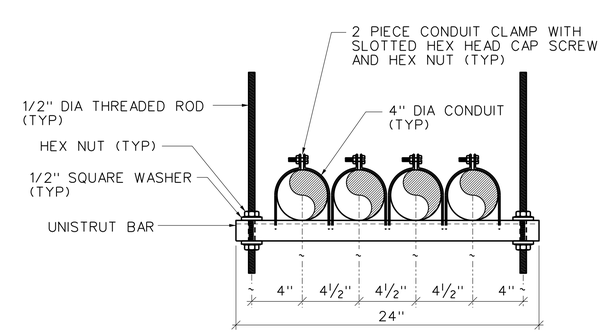

UNISTRUT SUPPORT SYSTEM

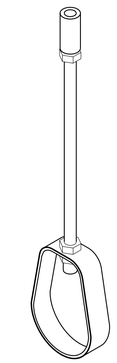

SINGLE CONDUIT HANGER

E2 / E512 TYPICAL CONDUIT SUPPORT
NTS

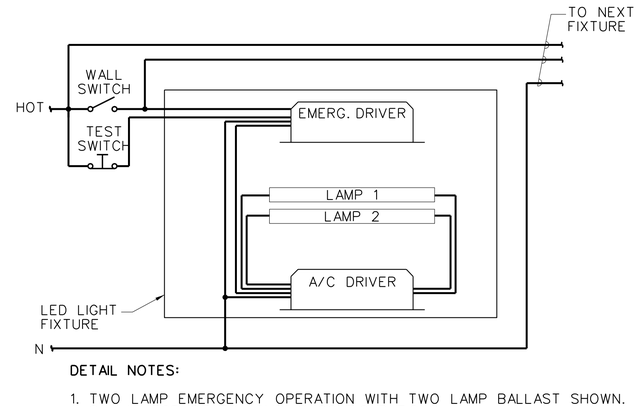

DETAIL NOTES:

1. TWO LAMP EMERGENCY OPERATION WITH TWO LAMP BALLAST SHOWN. SIMILAR FOR OTHER LAMPING CONFIGURATIONS.
2. SWITCHED BALLAST SHOWN. COORDINATE CONNECTION TO A/C BALLAST WITH MANUFACTURER.

—— SUPPLY BRANCH CIRCUITRY

B5 / E512 TYPICAL EMERGENCY DRIVER WIRING
NTS

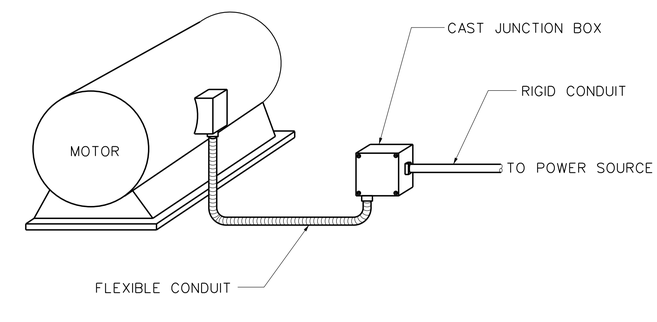

C2 / E512 TYPICAL CONDUIT TERMINATION AT MOTOR
NTS

REV	APPROVED DATE	DESCRIPTION	JCN	REDLINE DATE	APVD

DEPARTMENT OF TRANSPORTATION
FEDERAL AVIATION ADMINISTRATION
ATO - TECHNICAL OPERATIONS — WESTERN SERVICE AREA

ARTCC
MAJOR MECHANICAL MODERNIZATION

ELECTRICAL DETAILS

DENVER — LONGMONT — CO

REVIEWED BY

SUBMITTED BY: PAUL TULENKO — PROJECT ENGINEER
APPROVED BY: CALLEN R. COLLINS — MGR: ENGINEERING - SEATTLE

DO NOT SIGN

DESIGNED: YM
DRAWN: JA
CHECKED

ISSUED BY: ENGINEERING SERVICES ENROUTE/FSS

DATE
JCN: 1401893
DRAWING NO: ZDV-1401893-E512
REV

ISSUED FOR:

zdv-1401893-e512.dgn 6/27/2018 10:35:54 AM John CTR Allen

EDM: zdv-1401893-e512.dgn

DRAWING PRODUCED ON WSA MICROSTATION SYSTEM

LIGHTING FIXTURE SCHEDULE

TYPE	DESCRIPTION	MANUFACTURER	CATALOG NUMBER	LAMPS	VOLTS	FIXTURE MOUNTING		LOCATION	COMMENTS
						METHOD	HEIGHT		
RL	2X4 T5 RECESSED	LITHONIA/COLUMBIA	2RT5 28T5 MVOLTGEB95 LPM835P PWS1836	T5	120/277	RECESSED		ROOM B134	2-LAMP FIXTURE
RL1	2X4 T5 RECESSED W/ BATTERY PACK	LITHONIA/COLUMBIA	2RT5 28T5 MVOLTGEB95 EL14 LPM835P PWS1836	T5	120/277	RECESSED		ROOM B134	2-LAMP FIXTURE EMERGENCY BATTERY PACK
P	CREE LED SURFACE WRAP	ESSENTIA/CREE	S-WR4-40L-40K	LED	120/277	PENDANT		PUMP HOUSE & CHILLER RMS	COMPLIANT CLASS A OR B
P1	CREE LED SURFACE WRAP - EMERGENCY BACK UP	ESSENTIA/CREE	S-WR4-40L-40K-EB	LED	120/277	PENDANT		PUMP HOUSE & CHILLER RMS	EMERGENCY BATTERY PACK
S	CREE LED SURFACE WRAP	ESSENTIA/CREE	S-WR4-40L-40K	LED	120/277	SURFACE		TELCO ROOMS B101 & B102	COMPLIANT CLASS A OR B
S1	CREE LED SURFACE WRAP - EMERGENCY BACK UP	ESSENTIA/CREE	S-WR4-40L-40K-EB	LED	120/277	SURFACE		TELCO ROOMS B101 & B102	EMERGENCY BATTERY PACK
R	2X4 LED RECESSED TROFFER	LITHONIA/COLUMBIA	2GTL4 LP840	LED	120/277	RECESSED		EOF B88 ROOM	COMPLIANT CLASS A OR B
R1	2X4 LED RECESSED TROFFER -EMERGENCY BACK UP	LITHONIA/COLUMBIA	2GTL4 LP840-EB	LED	120/277	RECESSED		EOF B88 ROOM	EMERGENCY BATTERY PACK
W	OUT DOOR WALL PACK LED	LITHONIA/COLUMBIA	ZIBO 40W LED	LED	120/277	WALL MOUNTED		COOLING TOWER/PUMP	5700 K
EXIT SIGN	SINGLE FACE WITH WHITE THERMAL PLASTIC HOUSING AND FACE WITH RED LETTER	LITHONIA QUANTUM SERIES	LQMPS3R120.277ELN	LED	120/277	WALL MOUNTED		TELCO ROOMS B101 & B102	INTEGRAL BATTERY & CHARGE COMPLIANT CLASS A

NOTES:

REV	APPROVED DATE	DESCRIPTION	JCN	REDLINE DATE	APVD

DEPARTMENT OF TRANSPORTATION
FEDERAL AVIATION ADMINISTRATION
ATO - TECHNICAL OPERATIONS WESTERN SERVICE AREA

ARTCC
MAJOR MECHANICAL MODERNIZATION

LIGHTING FIXTURE SCHEDULE

DENVER LONGMONT CO

REVIEWED BY

SUBMITTED BY: PAUL TULENKO — PROJECT ENGINEER

APPROVED BY: CALLEN R. COLLINS — MGR: ENGINEERING - SEATTLE

DO NOT SIGN

DESIGNED YM
DRAWN JA
CHECKED

ISSUED BY ENGINEERING SERVICES ENROUTE/FSS

DATE
JCN 1401893
DRAWING NO ZDV-1401893-E601
REV

ISSUED FOR:

EDM: zdv-1401893-e601.dgn

DRAWING PRODUCED ON WSA MICROSTATION SYSTEM

zdv-1401893-e601.dgn 6/27/2018 11:54:43 AM John CTR Allen

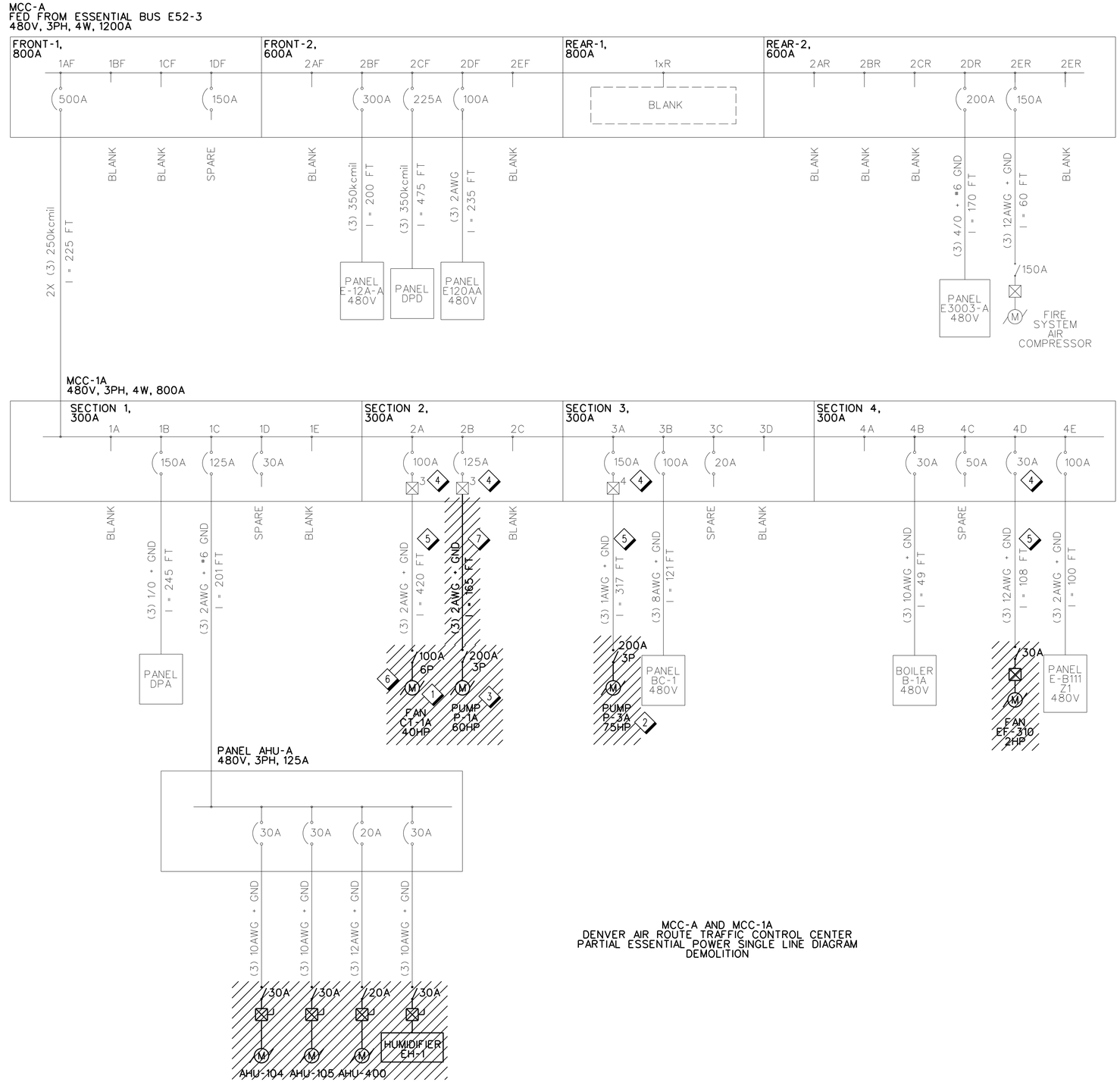

MCC-A AND MCC-1A
DENVER AIR ROUTE TRAFFIC CONTROL CENTER
PARTIAL ESSENTIAL POWER SINGLE LINE DIAGRAM
DEMOLITION

A8 / E701 MCC-A / MCC-1A SINGLE LINE DIAGRAM - DEMOLITION
NO SCALE

GENERAL NOTES

A. CONTRACTOR SHALL MAINTAIN THE CONTINUITY FOR ALL CIRCUITS SERVING AREAS NOT DESIGNATED FOR DEMOLITION.

B. THIS SINGLE LINE DIAGRAM WAS DEVELOPED UTILIZING EXISTING DRAWINGS. INFORMATION PERTINENT TO THIS PROJECT WAS FIELD VERIFIED BY SITE SURVEY. COORDINATE ANY DISCREPANCIES WITH COR.

SHEET NOTES

1. DEMOLISH COOLING TOWER FAN MOTOR, 2-SPEED STARTER, DISCONNECT SWITCH, AND EMERGENCY SHUTOFF SWITCH. DEMOLISH ALL CONDUCTORS, PULL BOXES AND CONDUITS BACK TO PUMP HOUSE. EXISTING CONDUCTORS FROM DISCONNECT TO MCC TO BE VERIFIED AND TESTED. IF SUITABLE, ONE SET OF EXISTING CONDUCTORS FROM MCC TO DISCONNECT SWITCH WILL BE RETAINED FOR RE-USE. EXISTING CONDUITS FROM MCC TO DISCONNECT SWITCH TO BE RETAINED FOR REUSE. SEE DRAWINGS E104 AND E204 FOR MORE DETAILS.
2. DEMOLISH CONDENSER WATER PUMP MOTOR, CONDUCTORS, SWITCHING CONTROLS, VARIABLE FREQUENCY DRIVE, AND DISCONNECT SWITCH. DEMOLISH ALL CONDUCTORS AND RACEWAY COMPONENTS FROM DISCONNECT SWITCH TO MOTOR. EXISTING CONDUCTORS FROM DISCONNECT TO MCC TO BE VERIFIED AND TESTED. WHERE PRACTICABLE, EXISTING RACEWAY AND CONDUCTORS FROM MCC TO DISCONNECT SWITCH TO BE RETAINED FOR REUSE. SEE DRAWING E712 FOR MORE DETAILS.
3. DEMOLISH CHILLED WATER PUMP MOTOR, DISCONNECT SWITCH, CONDUCTORS AND RACEWAY FROM MOTOR TO DISCONNECT SWITCH. RETAIN MOUNTING STAND FOR RE-USE.
4. VERIFY FUSE/BREAKER SIZE TO ENSURE PROPER COORDINATION.
5. VERIFY CONDUCTOR SIZE/QUANTITY AND CONDUIT SIZE. PROVIDE RED-LINE CORRECTIONS AGAINST EXISTING CONDITIIONS.
6. DEMOLISH ALL START/STOP/HAND/AUTO CONTROL CIRCUITS (LOCATED IN PUMP HOUSE).
7. DEMOLISH CONDUIT AND WIRING FROM MCC-1A TO MOTOR.

REV	APPROVED DATE	DESCRIPTION	JCN	REDLINE DATE	APVD

DEPARTMENT OF TRANSPORTATION
FEDERAL AVIATION ADMINISTRATION
ATO - TECHNICAL OPERATIONS WESTERN SERVICE AREA

ARTCC
MAJOR MECHANICAL MODERNIZATION
MCC-A / MCC-1A
SINGLE LINE DIAGRAM - DEMOLITION

DENVER LONGMONT CO

REVIEWED BY
SUBMITTED BY: PAUL TULENKO — PROJECT ENGINEER
APPROVED BY: CALLEN R. COLLINS — MGR: ENGINEERING - SEATTLE
DO NOT SIGN

DESIGNED TL	ISSUED BY: ENGINEERING SERVICES ENROUTE/FSS	DATE	JCN 1401893
DRAWN JA		DRAWING NO ZDV-1401893-E701	REV
CHECKED			

ISSUED FOR:

rd-1401893_701.dgn 6/27/2018 1:36:12 AM John CTR Allen

EDM: zdv-1401893-e701.dgn

DRAWING PRODUCED ON WSA MICROSTATION SYSTEM

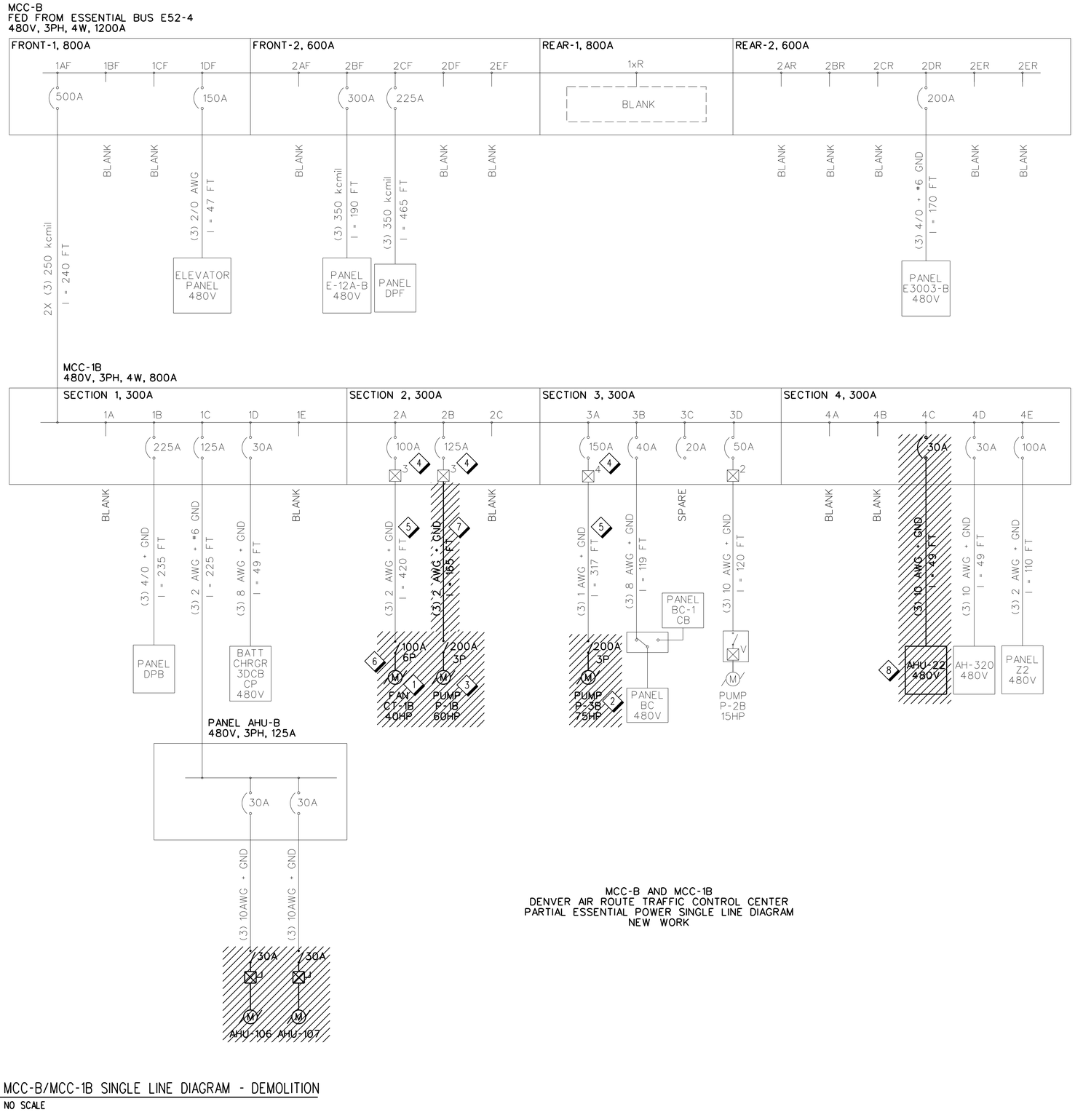

MCC-B AND MCC-1B
DENVER AIR ROUTE TRAFFIC CONTROL CENTER
PARTIAL ESSENTIAL POWER SINGLE LINE DIAGRAM
NEW WORK

A8 / E702 MCC-B/MCC-1B SINGLE LINE DIAGRAM - DEMOLITION
NO SCALE

GENERAL NOTES

A. CONTRACTOR SHALL MAINTAIN THE CONTINUITY FOR ALL CIRCUITS SERVING AREAS NOT DESIGNATED FOR DEMOLITION.

B. THIS SINGLE LINE DIAGRAM WAS DEVELOPED UTILIZING EXISTING DRAWINGS. INFORMATION PERTINENT TO THIS PROJECT WAS FIELD VERIFIED BY SITE SURVEY. COORDINATE ANY DISCREPANCIES WITH COR.

SHEET NOTES

1. DEMOLISH COOLING TOWER FAN MOTOR, 2-SPEED STARTER, DISCONNECT SWITCH, AND EMERGENCY SHUTOFF SWITCH. DEMOLISH ALL CONDUCTORS, PULL BOXES AND CONDUITS BACK TO PUMP HOUSE. EXISTING CONDUCTORS FROM DISCONNECT TO MCC TO BE VERIFIED AND TESTED. IF SUITABLE, ONE SET OF EXISTING CONDUCTORS FROM MCC TO DISCONNECT SWITCH WILL BE RETAINED FOR RE-USE. EXISTING CONDUITS FROM MCC TO DISCONNECT SWITCH TO BE RETAINED FOR REUSE. SEE DRAWINGS E104 AND E204 FOR MORE DETAILS.
2. DEMOLISH CONDENSER WATER PUMP MOTOR, CONDUCTORS, SWITCHING CONTROLS, VARIABLE FREQUENCY DRIVE, AND DISCONNECT SWITCH. DEMOLISH ALL CONDUCTORS AND RACEWAY COMPONENTS FROM DISCONNECT SWITCH TO MOTOR. EXISTING CONDUCTORS FROM DISCONNECT TO MCC TO BE VERIFIED AND TESTED. WHERE PRACTICABLE, EXISTING RACEWAY AND CONDUCTORS FROM MCC TO DISCONNECT SWITCH TO BE RETAINED FOR REUSE. SEE DRAWING E712 FOR MORE DETAILS.
3. DEMOLISH CHILLED WATER PUMP MOTOR, DISCONNECT SWITCH, CONDUCTORS AND RACEWAY FROM MOTOR TO DISCONNECT SWITCH. RETAIN MOUNTING STAND FOR RE-USE.
4. VERIFY FUSE/BREAKER SIZE TO ENSURE PROPER COORDINATION.
5. VERIFY CONDUCTOR SIZE/QUANTITY AND CONDUIT SIZE. PROVIDE RED-LINE CORRECTIONS AGAINST EXISTING CONDITIIONS.
6. DEMOLISH ALL START/STOP/HAND/AUTO CONTROL CIRCUITS (LOCATED IN PUMP HOUSE).
7. DEMOLISH CONDUIT AND WIRING FROM MCC-1B TO MOTOR.
8. RELOCATE TO MCC-1D. SEE DRAWING E714.

REV	APPROVED DATE	DESCRIPTION	JCN	REDLINE DATE	APVD

DEPARTMENT OF TRANSPORTATION
FEDERAL AVIATION ADMINISTRATION
ATO - TECHNICAL OPERATIONS WESTERN SERVICE AREA

ARTCC

MAJOR MECHANICAL MODERNIZATION
MCC-B / MCC-1B
SINGLE LINE DIAGRAM - DEMOLITION

DENVER LONGMONT CO

REVIEWED BY
SUBMITTED BY: PAUL TULENKO — PROJECT ENGINEER
APPROVED BY: CALLEN R. COLLINS — MGR: ENGINEERING - SEATTLE
DO NOT SIGN
DESIGNED TL
DRAWN JA
CHECKED
ISSUED BY: ENGINEERING SERVICES ENROUTE/FSS
DATE
JCN 1401893
DRAWING NO ZDV-1401893-E702
REV

ISSUED FOR:

tch-1401893-702.dgn 6/27/2018 11:16:42 AM John CTR Allen

EDM: zdv-1401893-e702.dgn

DRAWING PRODUCED ON WSA MICROSTATION SYSTEM

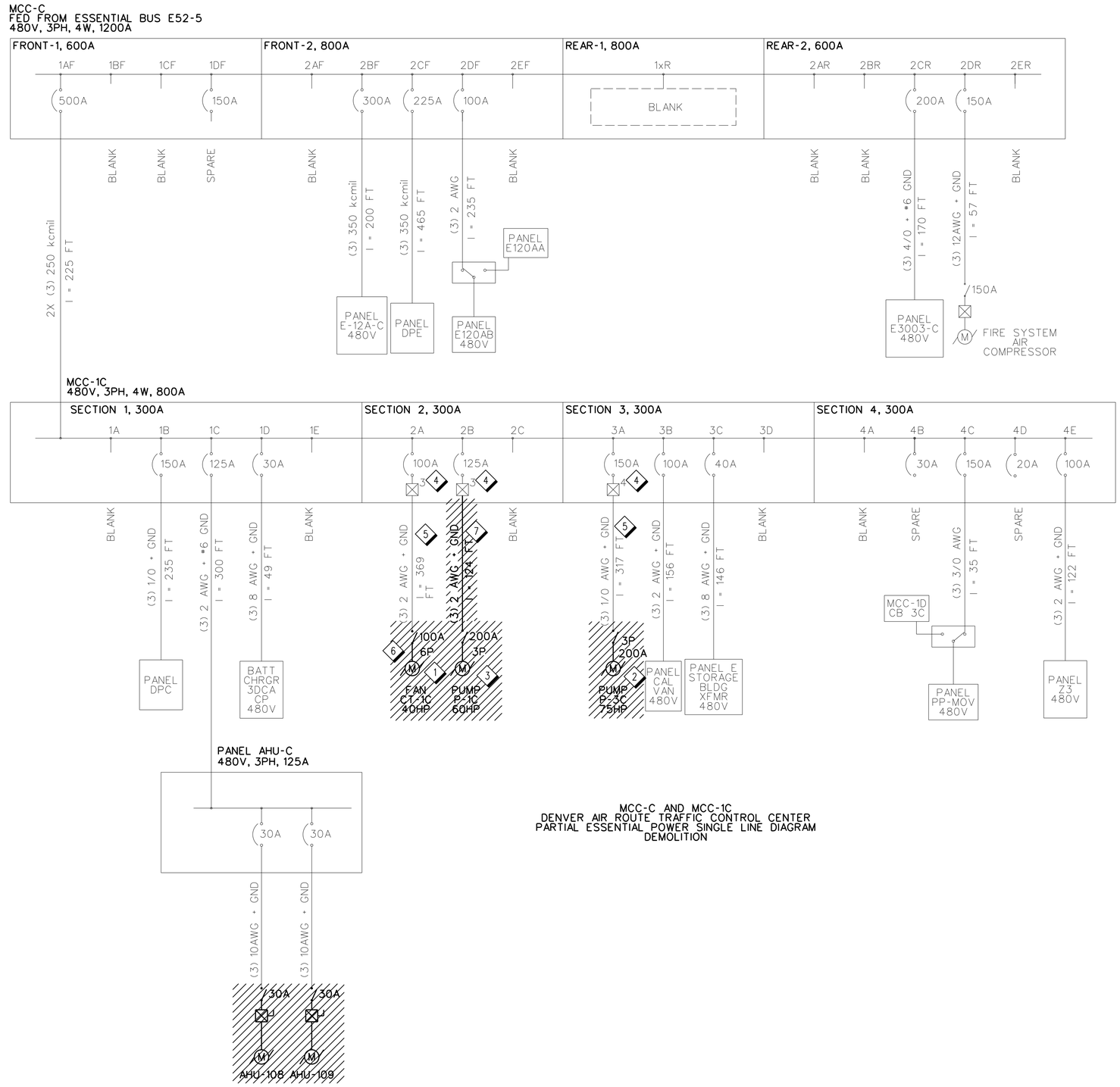

MCC-C AND MCC-1C
DENVER AIR ROUTE TRAFFIC CONTROL CENTER
PARTIAL ESSENTIAL POWER SINGLE LINE DIAGRAM
DEMOLITION

A8 / E703 MCC-C/MCC-1C SINGLE LINE DIAGRAM - DEMOLITION
NO SCALE

GENERAL NOTES

A. CONTRACTOR SHALL MAINTAIN THE CONTINUITY FOR ALL CIRCUITS SERVING AREAS NOT DESIGNATED FOR DEMOLITION.

B. THIS SINGLE LINE DIAGRAM WAS DEVELOPED UTILIZING EXISTING DRAWINGS. INFORMATION PERTINENT TO THIS PROJECT WAS FIELD VERIFIED BY SITE SURVEY. COORDINATE ANY DISCREPANCIES WITH COR.

SHEET NOTES

1. DEMOLISH COOLING TOWER FAN MOTOR, 2-SPEED STARTER, DISCONNECT SWITCH, AND EMERGENCY SHUTOFF SWITCH. DEMOLISH ALL CONDUCTORS, PULL BOXES AND CONDUITS BACK TO PUMP HOUSE. EXISTING CONDUCTORS FROM DISCONNECT TO MCC TO BE VERIFIED AND TESTED. IF SUITABLE, ONE SET OF EXISTING CONDUCTORS FROM MCC TO DISCONNECT SWITCH WILL BE RETAINED FOR RE-USE. EXISTING CONDUITS FROM MCC TO DISCONNECT SWITCH TO BE RETAINED FOR REUSE. SEE DRAWINGS E104 AND E204 FOR MORE DETAILS.
2. DEMOLISH CONDENSER WATER PUMP MOTOR, CONDUCTORS, SWITCHING CONTROLS, VARIABLE FREQUENCY DRIVE, AND DISCONNECT SWITCH. DEMOLISH ALL CONDUCTORS AND RACEWAY COMPONENTS FROM DISCONNECT SWITCH TO MOTOR. EXISTING CONDUCTORS FROM DISCONNECT TO MCC TO BE VERIFIED AND TESTED. WHERE PRACTICABLE, EXISTING RACEWAY AND CONDUCTORS FROM MCC TO DISCONNECT SWITCH TO BE RETAINED FOR REUSE. SEE DRAWING E712 FOR MORE DETAILS.
3. DEMOLISH CHILLED WATER PUMP MOTOR, DISCONNECT SWITCH, CONDUCTORS AND RACEWAY FROM MOTOR TO DISCONNECT SWITCH. RETAIN MOUNTING STAND FOR RE-USE.
4. VERIFY FUSE/BREAKER SIZE TO ENSURE PROPER COORDINATION.
5. VERIFY CONDUCTOR SIZE/QUANTITY AND CONDUIT SIZE. PROVIDE RED-LINE CORRECTIONS AGAINST EXISTING CONDITIIONS.
6. DEMOLISH ALL START/STOP/HAND/AUTO CONTROL CIRCUITS (LOCATED IN PUMP HOUSE).
7. DEMOLISH CONDUIT AND WIRING FROM MCC-1C TO MOTOR.

REV	APPROVED DATE	DESCRIPTION	JCN	REDLINE DATE	APVD

DEPARTMENT OF TRANSPORTATION
FEDERAL AVIATION ADMINISTRATION
ATO - TECHNICAL OPERATIONS — WESTERN SERVICE AREA

ARTCC
MAJOR MECHANICAL MODERNIZATION
MCC-C / MCC-1C
SINGLE LINE DIAGRAM - DEMOLITION

DENVER — LONGMONT — CO

REVIEWED BY
SUBMITTED BY: PAUL TULENKO — PROJECT ENGINEER
APPROVED BY: CALLEN R. COLLINS — MGR: ENGINEERING - SEATTLE
DO NOT SIGN

DESIGNED TL
DRAWN JA
CHECKED
ISSUED BY: ENGINEERING SERVICES ENROUTE/FSS
DATE
JCN 1401893
DRAWING NO ZDV-1401893-E703
REV

ISSUED FOR:

DRAWING PRODUCED ON WSA MICROSTATION SYSTEM

EDM: zdv-1401893-e703.dgn

rd-1401893-e703.dgn 6/27/2018 11:37:50 AM John CTR Allen

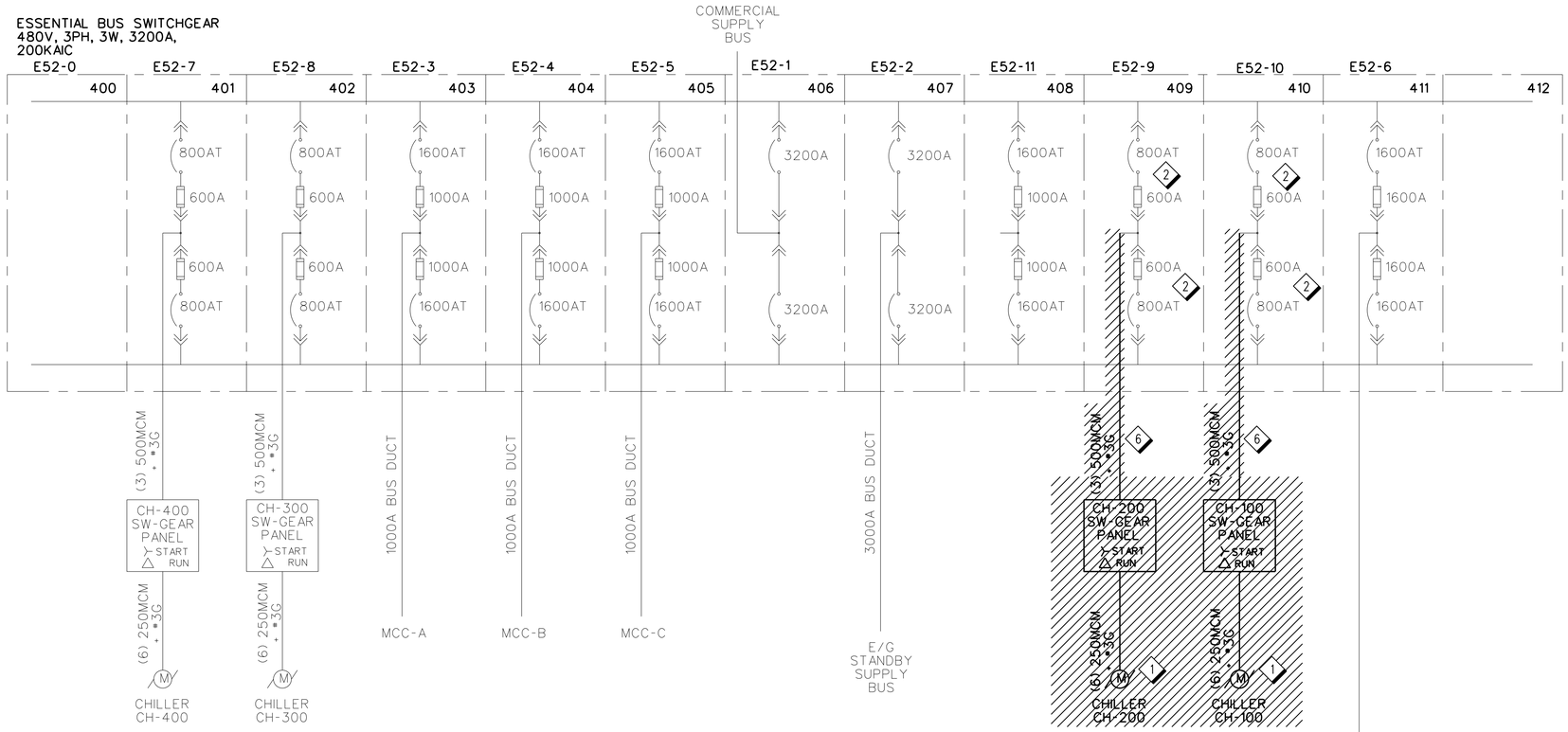

E8 / E704 ESSENTIAL POWER SINGLE LINE DIAGRAM - DEMOLITION
NO SCALE

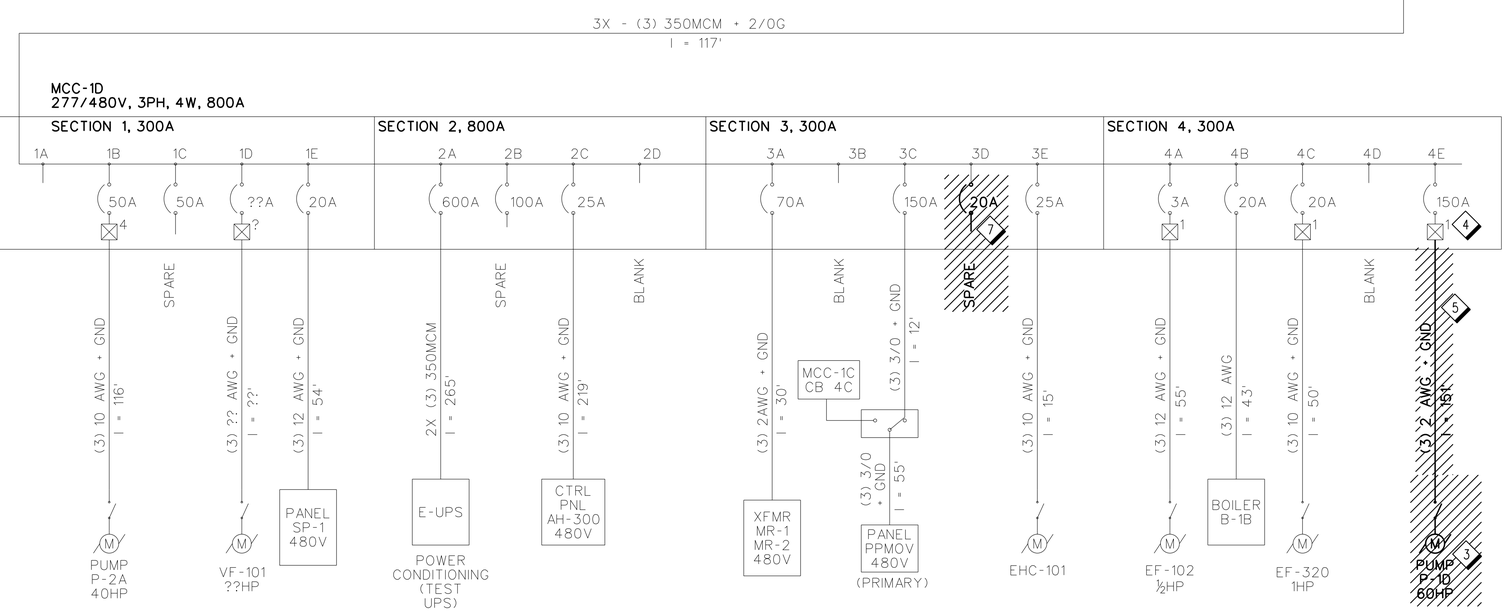

A8 / E704 MCC-1D SINGLE LINE DIAGRAM - DEMOLITION
NO SCALE

MCC-1D
DENVER AIR ROUTE TRAFFIC CONTROL CENTER
PARTIAL ESSENTIAL POWER SINGLE LINE DIAGRAM
DEMOLITION

GENERAL NOTES

A. CONTRACTOR SHALL MAINTAIN THE CONTINUITY FOR ALL CIRCUITS SERVING AREAS NOT DESIGNATED FOR DEMOLITION.

B. THIS SINGLE LINE DIAGRAM WAS DEVELOPED UTILIZING EXISTING DRAWINGS. INFORMATION PERTINENT TO THIS PROJECT WAS FIELD VERIFIED BY SITE SURVEY. COORDINATE ANY DISCREPANCIES WITH COR.

SHEET NOTES

1. EXISTING CHILLER TO BE REPLACED. DEMOLISH ASSOCIATED CONTROLS ENCLOSURE, STARTER, CONDUCTORS AND RACEWAY COMPONENTS.
2. VERIFY FUSE/BREAKER SIZE TO ENSURE PROPER COORDINATION.
3. DEMOLISH CHILLED WATER PUMP MOTOR, DISCONNECT SWITCH, CONDUCTORS AND RACEWAY FROM MOTOR TO DISCONNECT SWITCH. RETAIN MOUNTING STAND FOR RE-USE.
4. VERIFY FUSE/BREAKER SIZE TO ENSURE PROPER COORDINATION.
5. DEMOLISH CONDUIT AND WIRING FROM MCC-1D TO MOTOR.
6. DEMOLISH CONDUIT AND WIRING FROM ESSENTIAL BUS TO CHILLER.
7. REMOVE EXISTING 20A CIRCUIT BREAKER AND SAVE FOR REINSTALLATION.

REV	APPROVED DATE	DESCRIPTION	JCN	REDLINE DATE	APVD

DEPARTMENT OF TRANSPORTATION
FEDERAL AVIATION ADMINISTRATION
ATO - TECHNICAL OPERATIONS WESTERN SERVICE AREA

ARTCC
MAJOR MECHANICAL MODERNIZATION
ESSENTIAL POWER / MCC-1D
SINGLE LINE DIAGRAM - DEMOLITION

DENVER LONGMONT CO

REVIEWED BY
SUBMITTED BY: PAUL TULENKO — PROJECT ENGINEER
APPROVED BY: CALLEN R. COLLINS — MGR: ENGINEERING - SEATTLE
DO NOT SIGN
DESIGNED TL
DRAWN JA
CHECKED
ISSUED BY: ENGINEERING SERVICES ENROUTE/FSS
DATE
JCN 1401893
DRAWING NO ZDV-1401893-E704
REV

ISSUED FOR:

DRAWING PRODUCED ON WSA MICROSTATION SYSTEM

rdn-1401893-e704.dgn 6/27/2018 11:37:42 AM John CTR Allen
DGN: zdv-1401893-e704.dgn

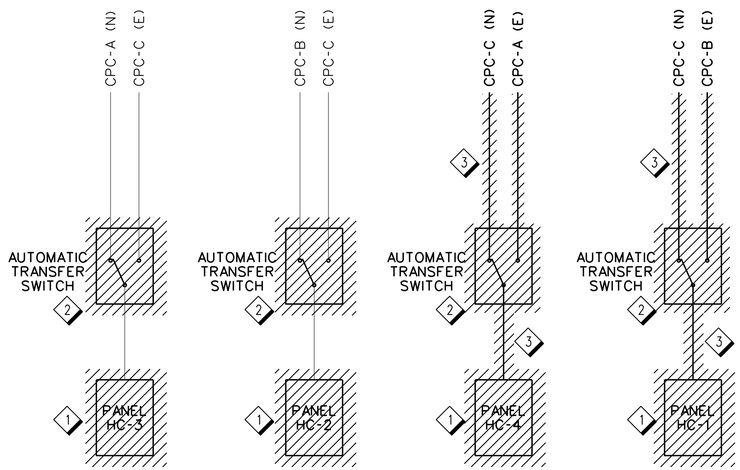

HOST COMPUTER ROOM B134
DENVER AIR ROUTE TRAFFIC CONTROL CENTER
PARTIAL HC-1/HC-2/HC-3/HC-4 SINGLE LINE DIAGRAM
DEMOLITION

C8 / E705 CRITICAL POWER TRANSFER SWITCH SINGLE LINE DIAGRAM - DEMOLITION
NO SCALE

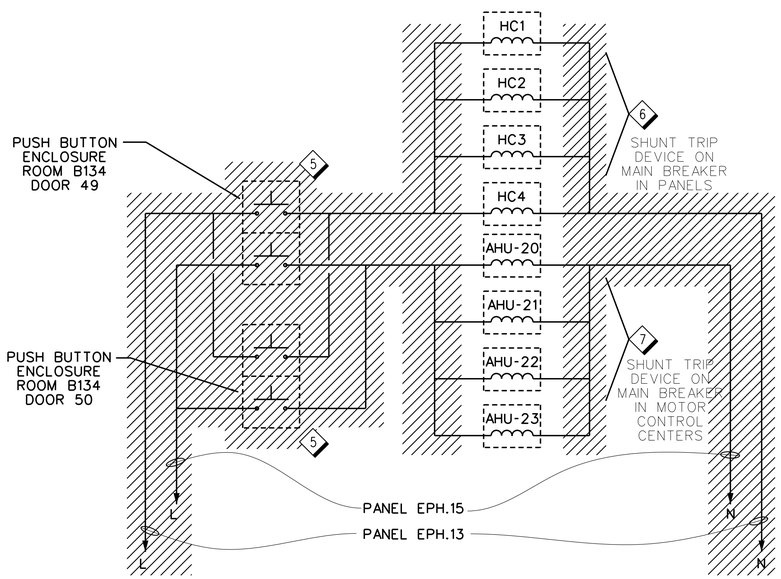

HOST COMPUTER ROOM B134
DENVER AIR ROUTE TRAFFIC CONTROL CENTER
PARTIAL EMERGENCY SHUT DOWN SINGLE LINE DIAGRAM
DEMOLITION

A8 / E705 EMERGENCY POWER SHUT DOWN SWITCH SINGLE LINE DIAGRAM - DEMOLITION
NO SCALE

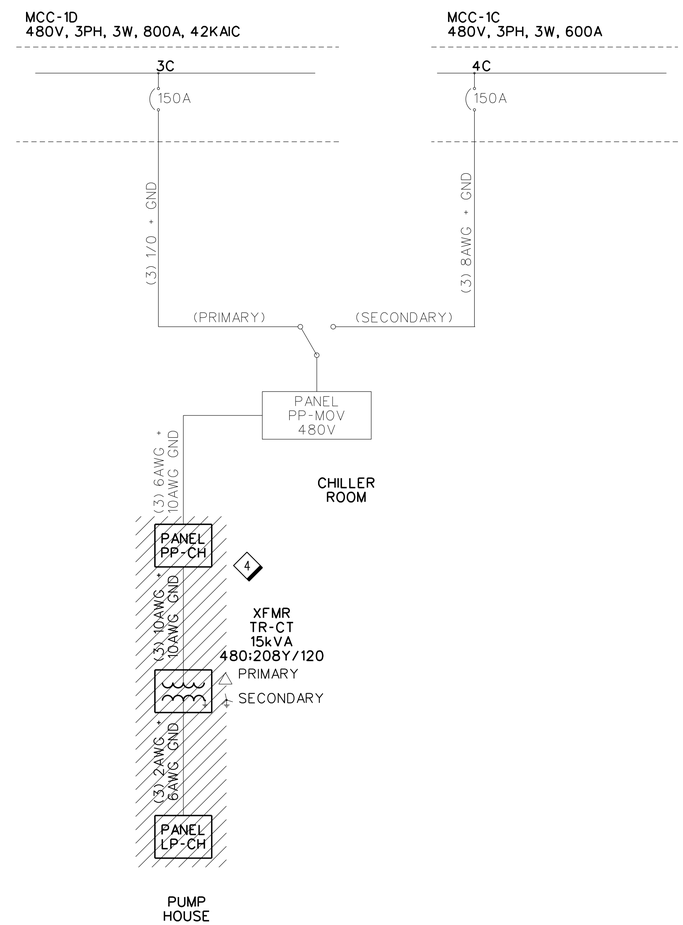

C5 / E705 PP-MOV/PUMP HOUSE SINGLE LINE DIAGRAM - DEMOLITION
NO SCALE

GENERAL NOTES

A. CONTRACTOR SHALL MAINTAIN THE CONTINUITY FOR ALL CIRCUITS SERVING AREAS NOT DESIGNATED FOR DEMOLITION.

B. THIS SINGLE LINE DIAGRAM WAS DEVELOPED UTILIZING EXISTING DRAWINGS. INFORMATION PERTINENT TO THIS PROJECT WAS FIELD VERIFIED BY SITE SURVEY. COORDINATE ANY DISCREPANCIES WITH COR.

SHEET NOTES

1. DEMOLISH COVER PANEL, BREAKERS, BUS BARS, AND WIRING IN PANELS. PANEL ENCLOSURES TO REMAIN FOR REUSE.
2. DEMOLISH TRANSFER SWITCH.
3. DEMOLISH BRANCH CIRCUIT CONDUIT AND CONDUCTORS BACK TO SOURCE.
4. DEMOLISH ALL PANELS, CONDUIT, TRANSFORMER, AND CONDUCTORS IN PUMP HOUSE.
5. DEMOLISH SWITCHES, BRANCH CIRCUIT CONDUIT AND CONDUCTORS BACK TO SOURCE.
6. DEMOLISH SHUNT SWITCHES FOR CRITICAL POWER PANELS HC1 THRU HC4.
7. DEMOLISH SHUNT SWITCHES FOR AIR HANDLER UNINTS AHU-20 THRU AHU-23.

REV	APPROVED DATE	DESCRIPTION	JCN	REDLINE DATE	APVD

DEPARTMENT OF TRANSPORTATION
FEDERAL AVIATION ADMINISTRATION
ATO - TECHNICAL OPERATIONS WESTERN SERVICE AREA

ARTCC

MAJOR MECHANICAL MODERNIZATION
PANELS HC-1/HC-2/HC-3/HC-4 & PUMP HOUSE
SINGLE LINE DIAGRAM - DEMOLITION

DENVER LONGMONT CO

REVIEWED BY
SUBMITTED BY: PAUL TULENKO — PROJECT ENGINEER
APPROVED BY: CALLEN R. COLLINS — MGR: ENGINEERING - SEATTLE
DO NOT SIGN

DESIGNED TL
DRAWN JA
CHECKED
ISSUED BY: ENGINEERING SERVICES ENROUTE/FSS
DATE
JCN 1401893
DRAWING NO ZDV-1401893-E705
REV

ISSUED FOR:

DRAWING PRODUCED ON WSA MICROSTATION SYSTEM

rdi-1401893-e705.dgn 6/27/2018 11:38:40 AM John CTR Allen

CDM: zdv-1401893-e705.dgn

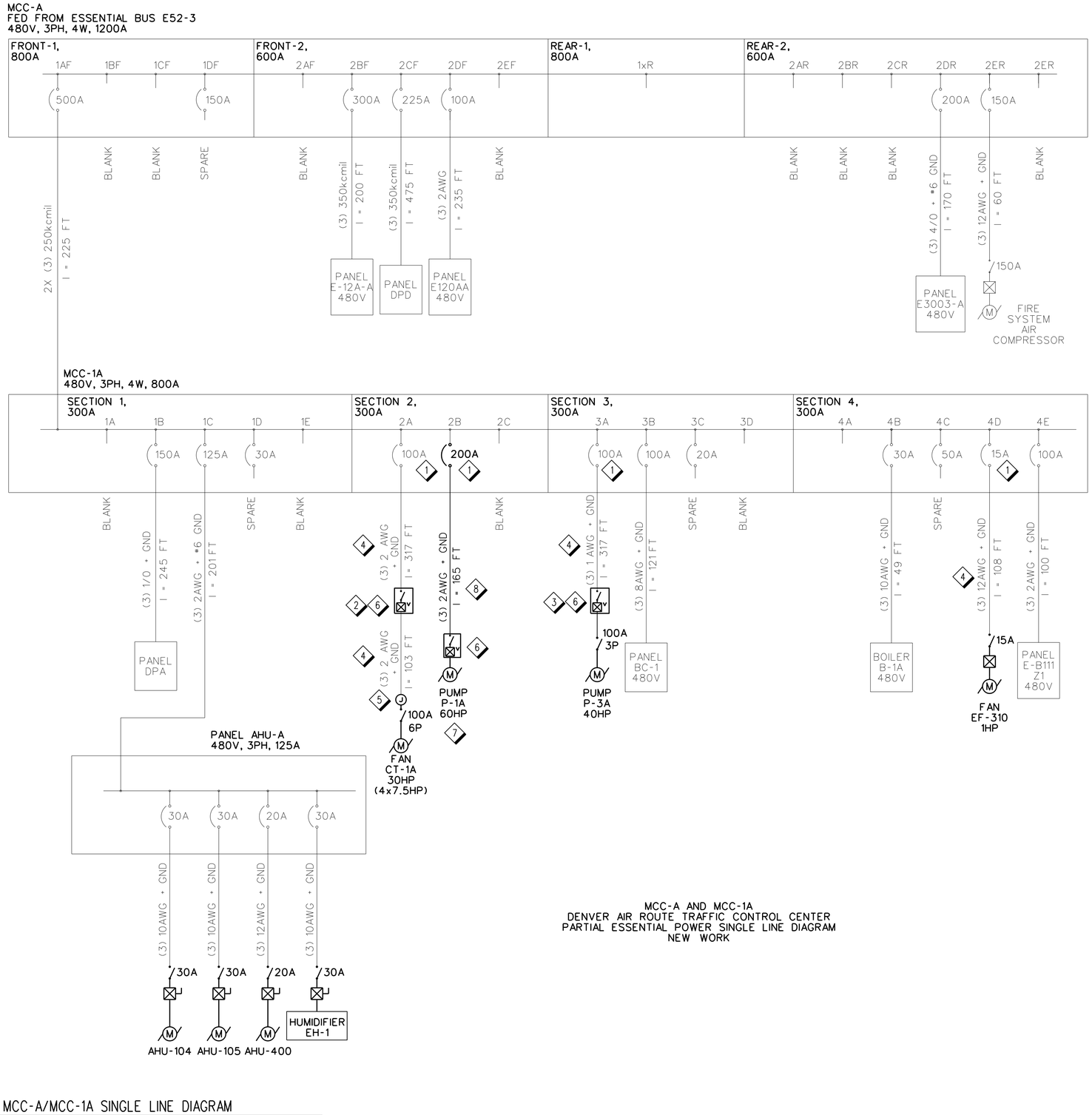

MCC-A AND MCC-1A
DENVER AIR ROUTE TRAFFIC CONTROL CENTER
PARTIAL ESSENTIAL POWER SINGLE LINE DIAGRAM
NEW WORK

A8 / E711 MCC-A/MCC-1A SINGLE LINE DIAGRAM
NO SCALE

GENERAL NOTES

A. CONTRACTOR SHALL MAINTAIN THE CONTINUITY FOR ALL CIRCUITS SERVING AREAS NOT DESIGNATED FOR DEMOLITION.

B. THIS SINGLE LINE DIAGRAM WAS DEVELOPED UTILIZING EXISTING DRAWINGS. INFORMATION PERTINENT TO THIS PROJECT WAS FIELD VERIFIED BY SITE SURVEY. COORDINATE ANY DISCREPANCIES WITH COR.

C. CONTRACTOR TO PERFORM COORDINATION STUDY TO DETERMINE PROPER TRIP SETTINGS.

D. CONTRACTOR SHALL COORDINATE THE MOUNTING HEIGHT OF VFD DRIVE.

SHEET NOTES

1. VERIFY CIRCUIT BREAKER SIZE AND TYPE TO ASSURE PROPER COORDINATION.
2. PROVIDE NATIVE BACNET COMPLIANT VFD, TO BE LOCATED IN PUMP HOUSE ANNEX. RE-USE RACEWAY AND CONDUCTORS FROM MCC TO NEW PULL BOX AT NEW PUMP HOUSE ANNEX. PROVIDE NEW RACEWAY AND CONDUCTORS FROM VFD TO COOLING TOWER FAN MOTOR(S). PROVIDE A NEMA 12 (MINIMUM) RATED DICONNECTING MEANS TO BE LOCATED AT THE FAN MOTOR(S). TO PREVENT DAMAGE TO THE VFD, THE DISCONNECTING MEANS SHALL UTILIZE A VERIFIED MAKE-BEFORE-BREAK AUXILLARY CONTACT TO SIGNAL THE VFD THAT THE DISCONNECTING MEANS IS BEING TURNED OFF SO THAT THE VFD MAY EXECUTE A COAST-TO-STOP. PROVIDE RACEWAY AND CONDUCTORS FOR AUX CONTACT SIGNAL.
3. PROVIDE VFD W/ INTEGRAL DISCONNECTING MEANS TO BE LOCATED IN PUMP HOUSE ANNEX. RE-USE RACEWAY AND CONDUCTORS FROM MCC TO EXISTING PULL BOX IN PUMP HOUSE. PROVIDE NEW CONDUCTORS FROM VFD TO PUMP MOTOR IN EXISTING RACEWAY. TO PREVENT DAMAGE TO THE VFD, THE DISCONNECTING MEANS SHALL UTILIZE A VERFIED MAKE-BEFORE-BREAK AUXILIARY CONTACT TO SIGNAL THE VFD TO EXECUTE A COAST-TO-STOP.
4. CONDUCTOR SIZE, QUANTITY AND CONDITION VERIFIED DURING DEMOLITION. EXISTING CONDUCTORS TO BE RE-USED TO THE GREATEST EXTENT PRACTICABLE. CO-ORDINATE DISCREPANCIES WITH COR AND/OR FAA DESIGN ENGINEER.
5. AN NEC COMPLIANT JUNCTION/SPLICE BOX LOCATED ON THE COOLING TOWER SUPPORT STRUCTURE IS ACCEPTABLE, IF NEEDED.
6. PROVIDE NATIVE BACNET COMPLIANT COMMUNICATIONS LINES, AS REQUIRED. COMM LINE TO BE SPECIFIED BY SCHNEIDER ELECTRIC CONTROLS PROVIDER.
7. PROVIDE NEMA 1 (MINIMUM) RATED VFD W/ INTEGRAL DISCONNECTING MEANS TO BE LOCATED IN CHILLER ROOM WITHIN LINE-OF-SIGHT OF CHILLED WATER PUMP MOTOR. RE-USE EXISTING RACEWAY AND CONDUCTORS TO THE GREATEST EXTENT THAT IS PRACTICABLE.
8. PROVIDE CONDUCTORS AND CONDUIT FROM MCC-1A TO PUMP MOTOR.

REV	APPROVED DATE	DESCRIPTION	JCN	REDLINE DATE	APVD

DEPARTMENT OF TRANSPORTATION
FEDERAL AVIATION ADMINISTRATION
ATO - TECHNICAL OPERATIONS — WESTERN SERVICE AREA

ARTCC
MAJOR MECHANICAL MODERNIZATION
MCC-A /MCC-1A
SINGLE LINE DIAGRAM - NEW WORK

DENVER — LONGMONT — CO

REVIEWED BY
SUBMITTED BY: PAUL TULENKO — PROJECT ENGINEER
APPROVED BY: CALLEN R. COLLINS — MGR: ENGINEERING - SEATTLE
DO NOT SIGN
DESIGNED TL
DRAWN JA
CHECKED
ISSUED BY: ENGINEERING SERVICES ENROUTE/FSS
DATE
JCN 1401893
DRAWING NO ZDV-1401893-E711
REV

ISSUED FOR:

rsh-1401893-e711.dgn 6/27/2018 11:39:09 AM John CTR Allen

EDM: zdv-1401893-e711.dgn

DRAWING PRODUCED ON WSA MICROSTATION SYSTEM

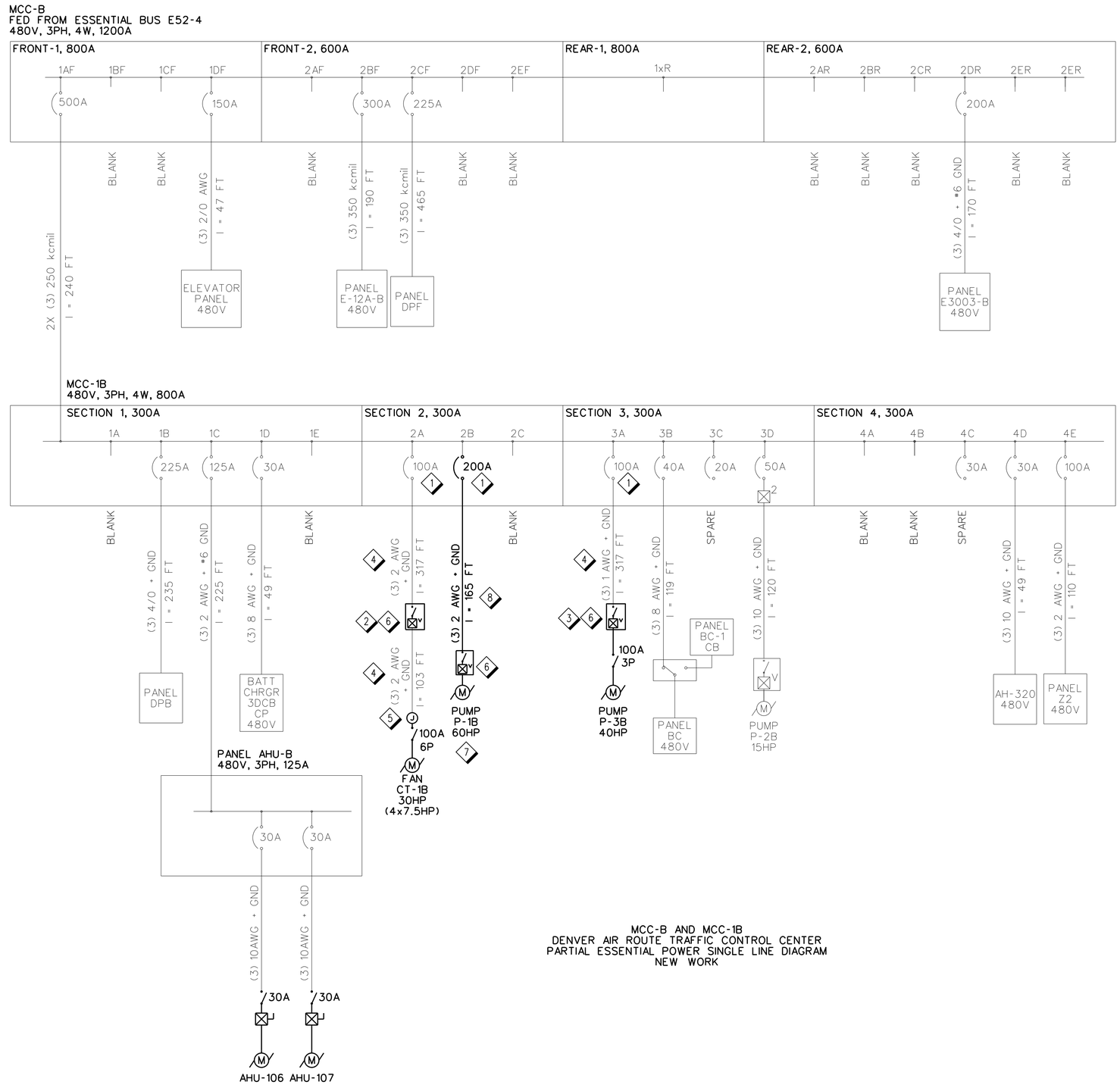

MCC-B AND MCC-1B
DENVER AIR ROUTE TRAFFIC CONTROL CENTER
PARTIAL ESSENTIAL POWER SINGLE LINE DIAGRAM
NEW WORK

A8 / E712 MCC-B/MCC-1B SINGLE LINE DIAGRAM
NO SCALE

GENERAL NOTES

A. CONTRACTOR SHALL MAINTAIN THE CONTINUITY FOR ALL CIRCUITS SERVING AREAS NOT DESIGNATED FOR DEMOLITION.

B. THIS SINGLE LINE DIAGRAM WAS DEVELOPED UTILIZING EXISTING DRAWINGS. INFORMATION PERTINENT TO THIS PROJECT WAS FIELD VERIFIED BY SITE SURVEY. COORDINATE ANY DISCREPANCIES WITH COR.

C. CONTRACTOR TO PERFORM COORDINATION STUDY TO DETERMINE PROPER TRIP SETTINGS.

D. CONTRACTOR SHALL COORDINATE THE MOUNTING HEIGHT OF VFD DRIVE.

SHEET NOTES

1. VERIFY CIRCUIT BREAKER SIZE AND TYPE TO ASSURE PROPER COORDINATION.
2. PROVIDE NATIVE BACNET COMPLIANT VFD, TO BE LOCATED IN PUMP HOUSE ANNEX. RE-USE RACEWAY AND CONDUCTORS FROM MCC TO NEW PULL BOX AT NEW PUMP HOUSE ANNEX. PROVIDE NEW RACEWAY AND CONDUCTORS FROM VFD TO COOLING TOWER FAN MOTOR(S). PROVIDE A NEMA 12 (MINIMUM) RATED DICONNECTING MEANS TO BE LOCATED AT THE FAN MOTOR(S). TO PREVENT DAMAGE TO THE VFD, THE DISCONNECTING MEANS SHALL UTILIZE A VERIFIED MAKE-BEFORE-BREAK AUXILLARY CONTACT TO SIGNAL THE VFD THAT THE DISCONNECTING MEANS IS BEING TURNED OFF SO THAT THE VFD MAY EXECUTE A COAST-TO-STOP. PROVIDE RACEWAY AND CONDUCTORS FOR AUX CONTACT SIGNAL.
3. PROVIDE VFD W/ INTEGRAL DISCONNECTING MEANS TO BE LOCATED IN PUMP HOUSE ANNEX. RE-USE RACEWAY AND CONDUCTORS FROM MCC TO EXISTING PULL BOX IN PUMP HOUSE. PROVIDE NEW CONDUCTORS FROM VFD TO PUMP MOTOR IN EXISTING RACEWAY. TO PREVENT DAMAGE TO THE VFD, THE DISCONNECTING MEANS SHALL UTILIZE A VERFIED MAKE-BEFORE-BREAK AUXILIARY CONTACT TO SIGNAL THE VFD TO EXECUTE A COAST-TO-STOP.
4. CONDUCTOR SIZE, QUANTITY AND CONDITION VERIFIED DURING DEMOLITION. EXISTING CONDUCTORS TO BE RE-USED TO THE GREATEST EXTENT PRACTICABLE. CO-ORDINATE DISCREPANCIES WITH COR AND/OR FAA DESIGN ENGINEER.
5. AN NEC COMPLIANT JUNCTION/SPLICE BOX LOCATED ON THE COOLING TOWER SUPPORT STRUCTURE IS ACCEPTABLE, IF NEEDED.
6. PROVIDE NATIVE BACNET COMPLIANT COMMUNICATIONS LINES, AS REQUIRED. COMM LINE TO BE SPECIFIED BY SCHNEIDER ELECTRIC CONTROLS PROVIDER.
7. PROVIDE NEMA 1 (MINIMUM) RATED VFD W/ INTEGRAL DISCONNECTING MEANS TO BE LOCATED IN CHILLER ROOM WITHIN LINE-OF-SIGHT OF CHILLED WATER PUMP MOTOR. RE-USE EXISTING RACEWAY AND CONDUCTORS TO THE GREATEST EXTENT THAT IS PRACTICABLE.
8. PROVIDE CONDUCTORS AND CONDUIT FROM MCC-1B TO PUMP MOTOR.

REV	APPROVED DATE	DESCRIPTION	JCN	REDLINE DATE	APVD

DEPARTMENT OF TRANSPORTATION
FEDERAL AVIATION ADMINISTRATION
ATO - TECHNICAL OPERATIONS WESTERN SERVICE AREA

ARTCC
MAJOR MECHANICAL MODERNIZATION
MCC-B /MCC-1B
SINGLE LINE DIAGRAM - NEW WORK

DENVER LONGMONT CO

REVIEWED BY
SUBMITTED BY: PAUL TULENKO — PROJECT ENGINEER
APPROVED BY: CALLEN R. COLLINS — MGR: ENGINEERING - SEATTLE
DO NOT SIGN
DESIGNED TL
DRAWN JA
CHECKED
ISSUED BY: ENGINEERING SERVICES ENROUTE/FSS
DATE
JCN 1401893
DRAWING NO ZDV-1401893-E712
REV

ISSUED FOR:

DRAWING PRODUCED ON WSA MICROSTATION SYSTEM

rdn-1401893-e712.dgn 6/27/2018 11:39:34 AM John CTR Allen

EDM: zdv-1401893-e712.dgn

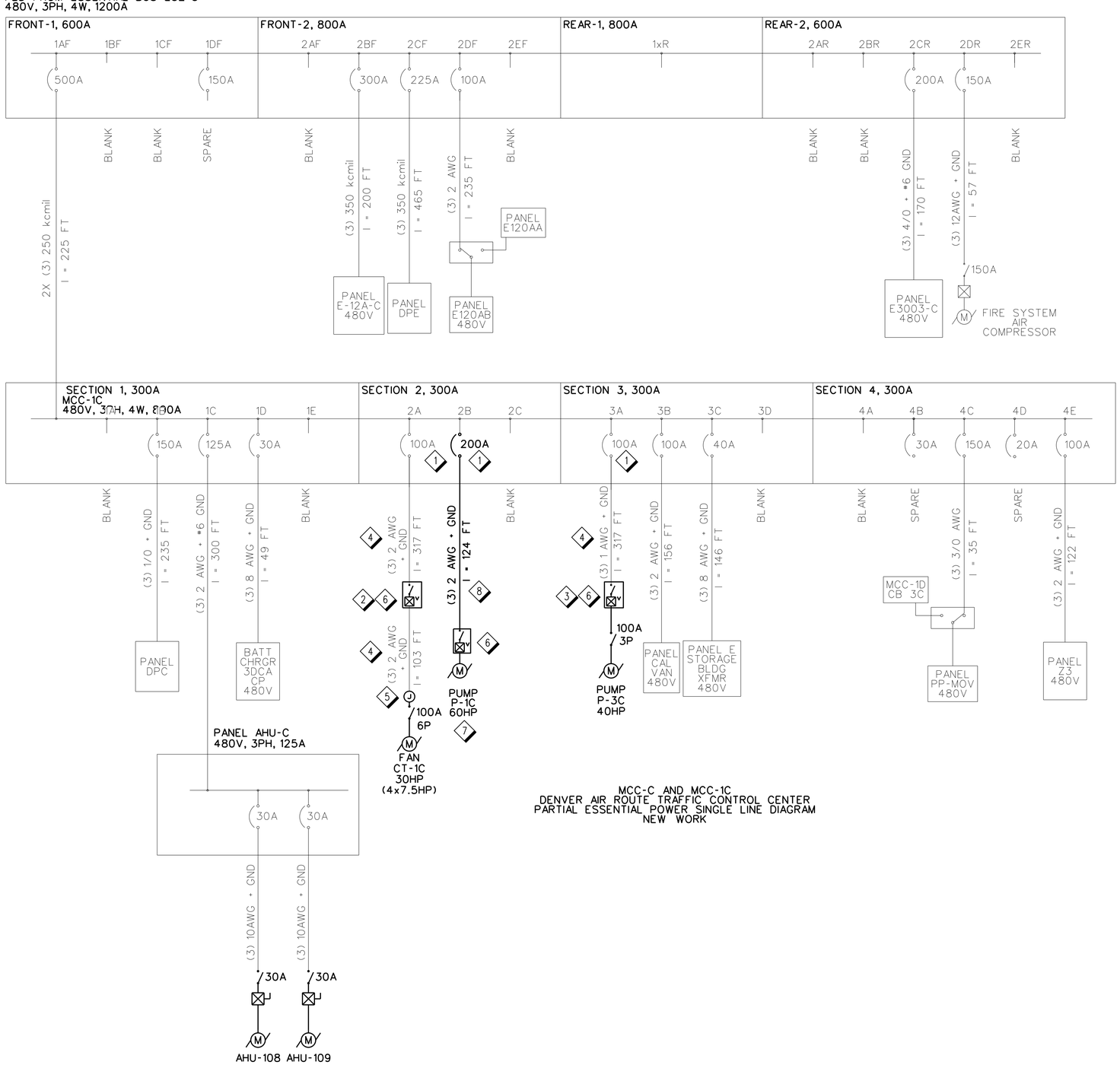

MCC-C AND MCC-1C
DENVER AIR ROUTE TRAFFIC CONTROL CENTER
PARTIAL ESSENTIAL POWER SINGLE LINE DIAGRAM
NEW WORK

A8 / E713 MCC-C/MCC-1C SINGLE LINE DIAGRAM
NO SCALE

GENERAL NOTES

A. CONTRACTOR SHALL MAINTAIN THE CONTINUITY FOR ALL CIRCUITS SERVING AREAS NOT DESIGNATED FOR DEMOLITION.

B. THIS SINGLE LINE DIAGRAM WAS DEVELOPED UTILIZING EXISTING DRAWINGS. INFORMATION PERTINENT TO THIS PROJECT WAS FIELD VERIFIED BY SITE SURVEY. COORDINATE ANY DISCREPANCIES WITH COR.

C. CONTRACTOR TO PERFORM COORDINATION STUDY TO DETERMINE PROPER TRIP SETTINGS.

D. CONTRACTOR SHALL COORDINATE THE MOUNTING HEIGHT OF VFD DRIVE.

SHEET NOTES

1. VERIFY CIRCUIT BREAKER SIZE AND TYPE TO ASSURE PROPER COORDINATION.
2. PROVIDE NATIVE BACNET COMPLIANT VFD, TO BE LOCATED IN PUMP HOUSE ANNEX. RE-USE RACEWAY AND CONDUCTORS FROM MCC TO NEW PULL BOX AT NEW PUMP HOUSE ANNEX. PROVIDE NEW RACEWAY AND CONDUCTORS FROM VFD TO COOLING TOWER FAN MOTOR(S). PROVIDE A NEMA 12 (MINIMUM) RATED DICONNECTING MEANS TO BE LOCATED AT THE FAN MOTOR(S). TO PREVENT DAMAGE TO THE VFD, THE DISCONNECTING MEANS SHALL UTILIZE A VERIFIED MAKE-BEFORE-BREAK AUXILLARY CONTACT TO SIGNAL THE VFD THAT THE DISCONNECTING MEANS IS BEING TURNED OFF SO THAT THE VFD MAY EXECUTE A COAST-TO-STOP. PROVIDE RACEWAY AND CONDUCTORS FOR AUX CONTACT SIGNAL.
3. PROVIDE VFD W/ INTEGRAL DISCONNECTING MEANS TO BE LOCATED IN PUMP HOUSE ANNEX. RE-USE RACEWAY AND CONDUCTORS FROM MCC TO EXISTING PULL BOX IN PUMP HOUSE. PROVIDE NEW CONDUCTORS FROM VFD TO PUMP MOTOR IN EXISTING RACEWAY. TO PREVENT DAMAGE TO THE VFD, THE DISCONNECTING MEANS SHALL UTILIZE A VERFIED MAKE-BEFORE-BREAK AUXILIARY CONTACT TO SIGNAL THE VFD TO EXECUTE A COAST-TO-STOP.
4. CONDUCTOR SIZE, QUANTITY AND CONDITION VERIFIED DURING DEMOLITION. EXISTING CONDUCTORS TO BE RE-USED TO THE GREATEST EXTENT PRACTICABLE. CO-ORDINATE DISCREPANCIES WITH COR AND/OR FAA DESIGN ENGINEER.
5. AN NEC COMPLIANT JUNCTION/SPLICE BOX LOCATED ON THE COOLING TOWER SUPPORT STRUCTURE IS ACCEPTABLE, IF NEEDED.
6. PROVIDE NATIVE BACNET COMPLIANT COMMUNICATIONS LINES, AS REQUIRED. COMM LINE TO BE SPECIFIED BY SCHNEIDER ELECTRIC CONTROLS PROVIDER.
7. PROVIDE NEMA 1 (MINIMUM) RATED VFD W/ INTEGRAL DISCONNECTING MEANS TO BE LOCATED IN CHILLER ROOM WITHIN LINE-OF-SIGHT OF CHILLED WATER PUMP MOTOR. RE-USE EXISTING RACEWAY AND CONDUCTORS TO THE GREATEST EXTENT THAT IS PRACTICABLE.
8. PROVIDE CONDUCTORS AND CONDUIT FROM MCC-1C TO PUMP MOTOR.

REV	APPROVED DATE	DESCRIPTION	JCN	REDLINE DATE	APVD

DEPARTMENT OF TRANSPORTATION
FEDERAL AVIATION ADMINISTRATION
ATO - TECHNICAL OPERATIONS WESTERN SERVICE AREA

ARTCC
MAJOR MECHANICAL MODERNIZATION
MCC-C /MCC-1C
SINGLE LINE DIAGRAM - NEW WORK

DENVER LONGMONT CO

REVIEWED BY
SUBMITTED BY: PAUL TULENKO — PROJECT ENGINEER
APPROVED BY: CALLEN R. COLLINS — MGR: ENGINEERING - SEATTLE
DESIGNED TL
DRAWN JA
CHECKED
ISSUED BY: ENGINEERING SERVICES ENROUTE/FSS
DATE
JCN 1401893
DRAWING NO ZDV-1401893-E713
REV

ISSUED FOR:

DRAWING PRODUCED ON WSA MICROSTATION SYSTEM

rdp-1401893-e713.dgn 6/27/2018 11:40:01 AM John CTR Allen

EDM: zdv-1401893-e713.dgn

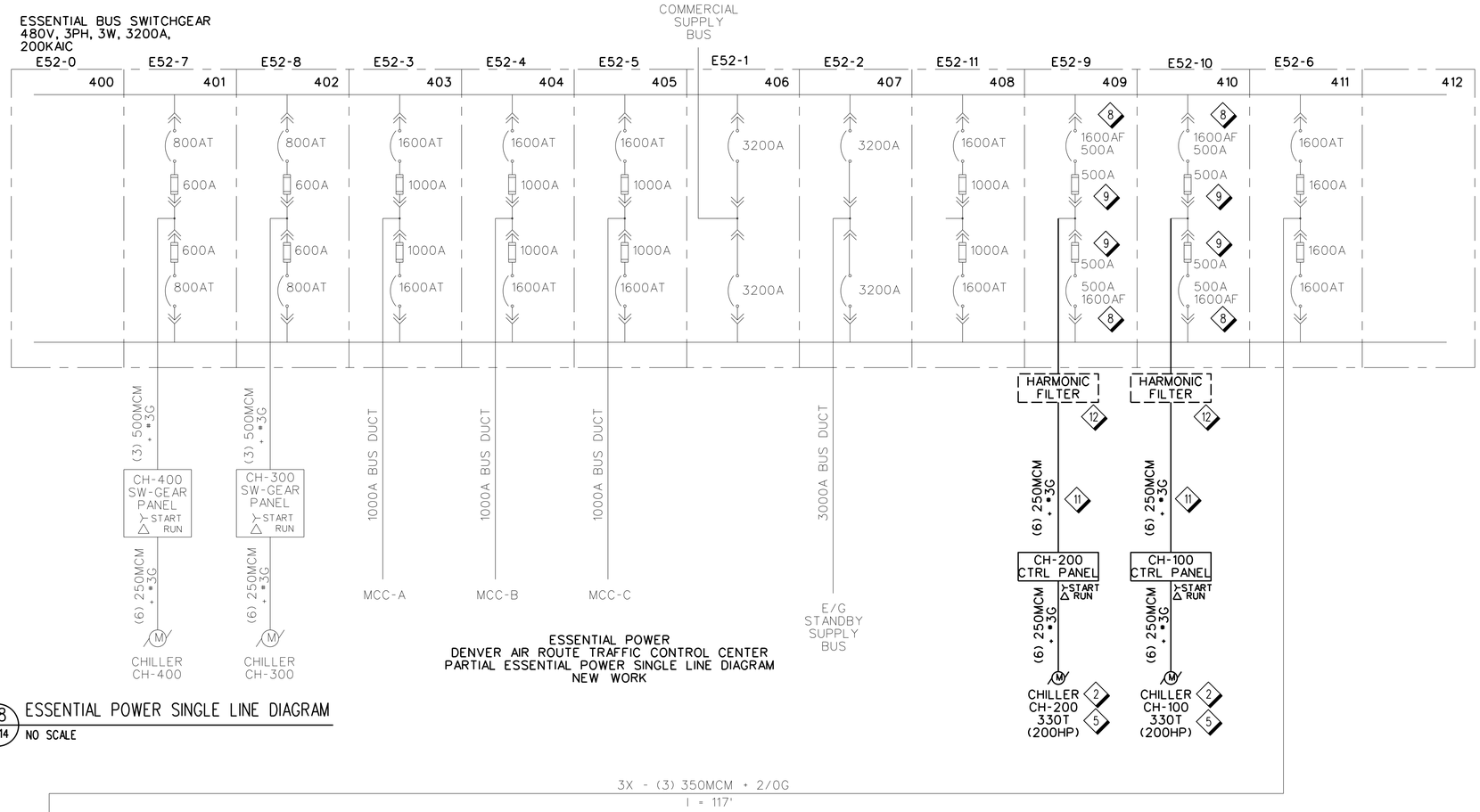

ESSENTIAL POWER
DENVER AIR ROUTE TRAFFIC CONTROL CENTER
PARTIAL ESSENTIAL POWER SINGLE LINE DIAGRAM
NEW WORK

E8 / E714 ESSENTIAL POWER SINGLE LINE DIAGRAM
NO SCALE

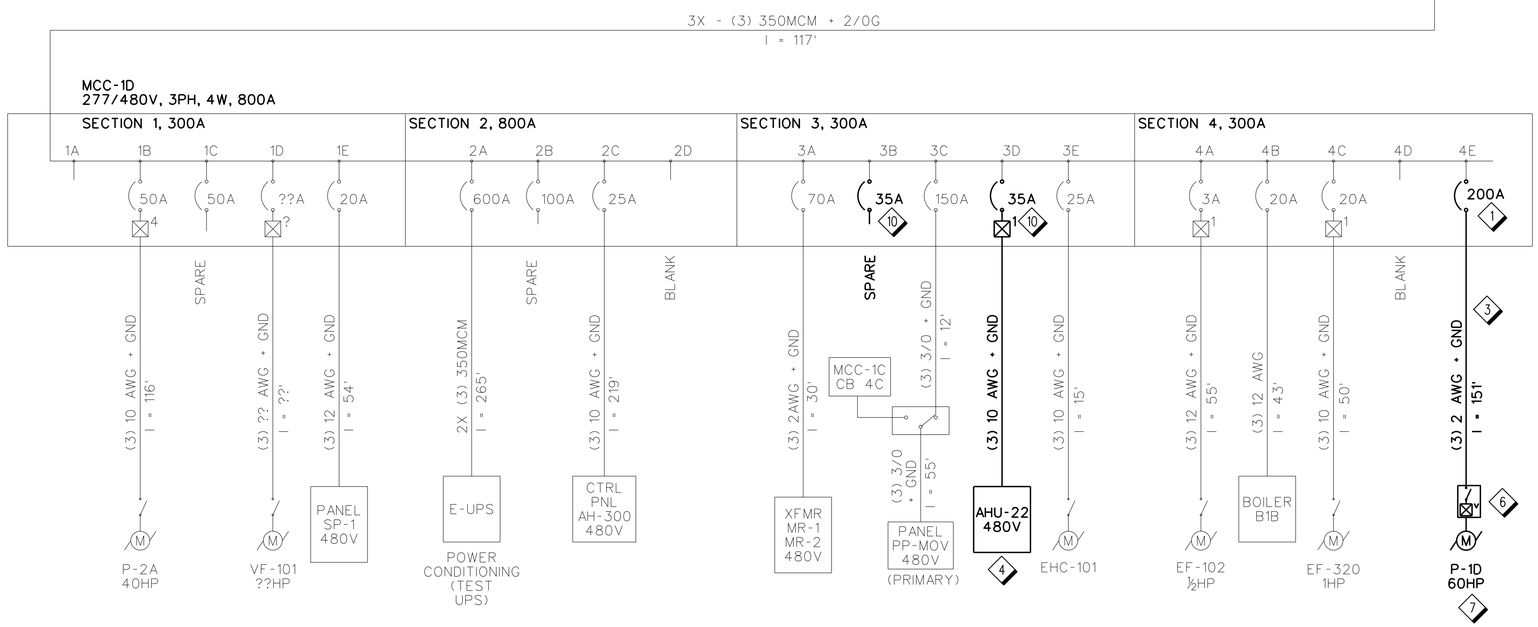

A8 / E714 MCC-1D SINGLE LINE DIAGRAM
NO SCALE

MCC-1D
DENVER AIR ROUTE TRAFFIC CONTROL CENTER
PARTIAL ESSENTIAL POWER SINGLE LINE DIAGRAM
NEW WORK

GENERAL NOTES

A. CONTRACTOR SHALL MAINTAIN THE CONTINUITY FOR ALL CIRCUITS SERVING AREAS NOT DESIGNATED FOR DEMOLITION.

B. THIS SINGLE LINE DIAGRAM WAS DEVELOPED UTILIZING EXISTING DRAWINGS. INFORMATION PERTINENT TO THIS PROJECT WAS FIELD VERIFIED BY SITE SURVEY. COORDINATE ANY DISCREPANCIES WITH COR.

C. CONTRACTOR TO PERFORM COORDINATION STUDY TO DETERMINE PROPER TRIP SETTINGS.

SHEET NOTES

1. VERIFY CIRCUIT BREAKER SIZE AND TYPE TO ASSURE PROPER COORDINATION.
2. CHILLER TO BE PROVIDED WITH MANUFACTURER'S NATIVE BACNET CONPLIANT CONTROLS PACKAGE. VFD FOR CHILLER TO BE PROVIDED BY VENDOR AS INTEGRAL PART OF MANUFACTURER'S CONTROLS PACKAGE. PROVIDE RACEWAY, AND J-BOX, IF REQUIRED. RE-USE EXISTING CONDUCTORS TO THE EXTENT THAT IT IS PRACTICABLE.
3. PROVIDE CONDUCTORS AND CONDUIT FROM MCC-1D TO PUMP MOTOR.
4. RELOCATE FROM MCC-1B.
5. PROVIDE NATIVE BACNET COMPLIANT COMMUNICATIONS LINES, AS REQUIRED. COMM LINE TO BE SPECIFIED BY SCHNEIDER ELECTRIC CONTROLS PROVIDER.
6. PROVIDE NATIVE BACNET COMPLIANT COMMUNICATIONS LINES, AS REQUIRED. COMM LINE TO BE SPECIFIED BY SCHNEIDER ELECTRIC CONTROLS PROVIDER.
7. PROVIDE NEMA 1 (MINIMUM) RATED VFD W/ INTEGRAL DISCONNECTING MEANS TO BE LOCATED IN CHILLER ROOM WITHIN LINE-OF-SIGHT OF CHILLED WATER PUMP MOTOR. RE-USE EXISTING RACEWAY AND CONDUCTORS TO THE GREATEST EXTENT THAT IS PRACTICABLE.
8. REUSE EXISTING 1600AF CIRCUIT BREAKER. ADJUST TRIP SETTINGS AS REQUIRED TO MAINTAIN PROPER COORDINATION.
9. VERIFY FUSE SIZE TO ENSURE PROPER COORDINATION.
10. MOVE EXISTING 20A BREAKER FROM 3D TO 3B.
11. PROVIDE CONDUCTORS AND CONDUIT FROM ESSENTIAL BUS TO CHILLER.
12. CONTRACTOR TO PROVIDE HARMONIC FILTER IN CHILLER CIRCUIT IF HARMONIC DISTORTION EXCEEDS 8%, MEASURED AFTER CHILLER INSTALLATION.

REV	APPROVED DATE	DESCRIPTION	JCN	REDLINE DATE	APVD

DEPARTMENT OF TRANSPORTATION
FEDERAL AVIATION ADMINISTRATION
ATO - TECHNICAL OPERATIONS WESTERN SERVICE AREA

ARTCC
MAJOR MECHANICAL MODERNIZATION
ESSENTIAL POWER / MCC-1D
SINGLE LINE DIAGRAM - NEW WORK

DENVER LONGMONT CO

REVIEWED BY
SUBMITTED BY: PAUL TULENKO — PROJECT ENGINEER
APPROVED BY: CALLEN R. COLLINS — MGR: ENGINEERING - SEATTLE
DO NOT SIGN

DESIGNED TL	ISSUED BY ENGINEERING SERVICES ENROUTE/FSS	DATE	JCN 1401893
DRAWN JA		DRAWING NO ZDV-1401893-E714	REV
CHECKED			

ISSUED FOR:

DRAWING PRODUCED ON WSA MICROSTATION SYSTEM

zdv-1401893-e714.dgn 6/27/2018 11:40:32 AM John CTR Allen

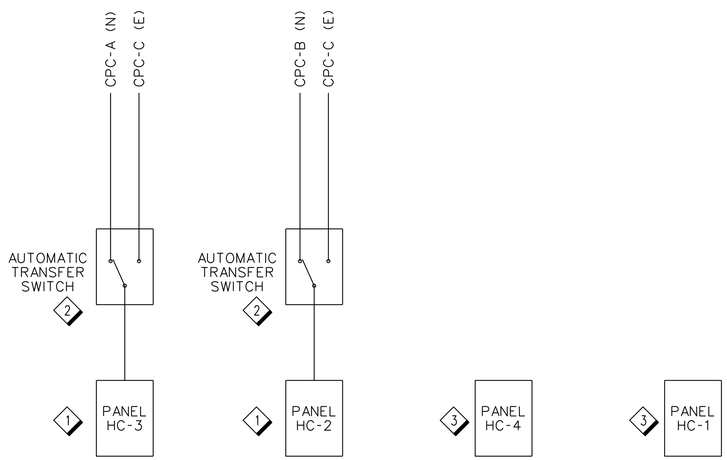

HOST COMPUTER ROOM B134
DENVER AIR ROUTE TRAFFIC CONTROL CENTER
PARTIAL HC-1/HC-2/HC-3/HC-4 SINGLE LINE DIAGRAM
NEW WORK

C8 / E715 CRITICAL POWER TRANSFER SWITCH SINGLE LINE DIAGRAM - NEW WORK
NO SCALE

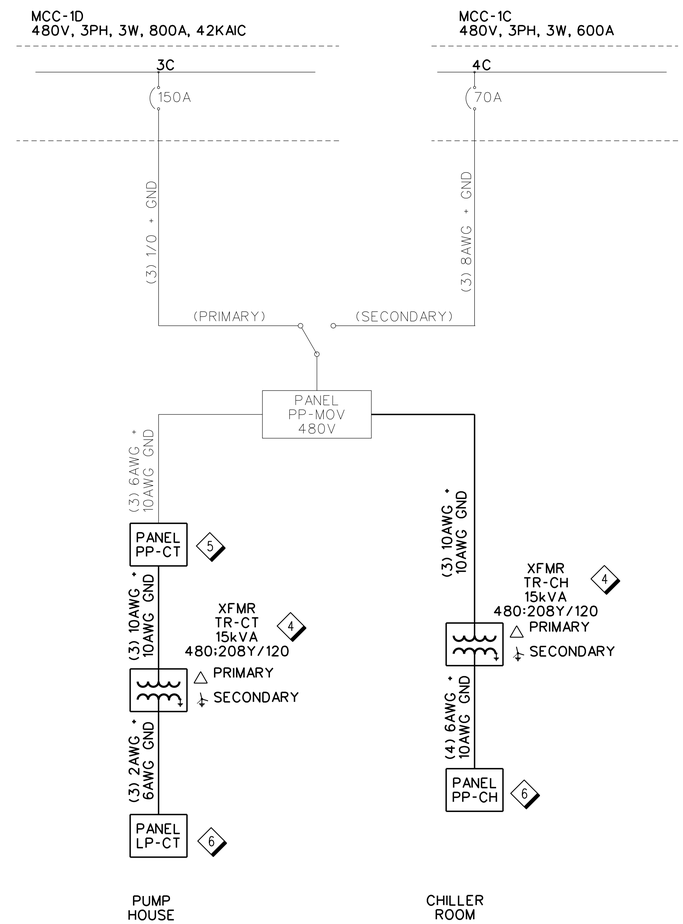

C5 / E715 PP-MOV/PUMP HOUSE SINGLE LINE DIAGRAM - NEW WORK
NO SCALE

GENERAL NOTES

A. CONTRACTOR SHALL MAINTAIN THE CONTINUITY FOR ALL CIRCUITS SERVING AREAS NOT DESIGNATED FOR DEMOLITION.

B. THIS SINGLE LINE DIAGRAM WAS DEVELOPED UTILIZING EXISTING DRAWINGS. INFORMATION PERTINENT TO THIS PROJECT WAS FIELD VERIFIED BY SITE SURVEY. COORDINATE ANY DISCREPANCIES WITH COR.

SHEET NOTES

1. RECONDITION CRITICAL PANELBOARDS HC-2 AND HC-3. PROVIDE PANEL COVERS, BUS BARS AND CIRCUIT BREAKERS AND INSTALL INTO EXISTING ENCLOSURES.
2. PROVIDE POWER PARAGON TRANSFER SWITCH.
3. PROVIDE REPLACEMENT BLANK COVER PLATES FOR EXISTING ENCLOSURES.
4. PROVIDE 15kVA, 480:208Y/120V TRANSFORMER IN NEMA 1 ENCLOSURE. PROVIDE PRIMARY AND SECONDARY CONDUIT AND CONDUCTORS TO TRANSFORMER.
5. PROVIDE 480V, 3ph, 3W, 42 POLE PANELBOARD.
6. PROVIDE 208V/120V, 3ph, 4W, 42 POLE PANELBOARD. PROVIDE CONDUIT AND CONDUCTORS FOR FEEDERS AND BRANCH CIRCUITS.

REV	APPROVED DATE	DESCRIPTION	JCN	REDLINE DATE	APVD

DEPARTMENT OF TRANSPORTATION
FEDERAL AVIATION ADMINISTRATION
ATO - TECHNICAL OPERATIONS — WESTERN SERVICE AREA

ARTCC

MAJOR MECHANICAL MODERNIZATION
PANELS HC-1/HC-2/HC-3/HC-4 AND PP-MOV
SINGLE LINE DIAGRAM - NEW WORK

DENVER — LONGMONT — CO

REVIEWED BY
SUBMITTED BY: PAUL TULENKO — PROJECT ENGINEER
APPROVED BY: CALLEN R. COLLINS — MGR: ENGINEERING - SEATTLE
DO NOT SIGN

DESIGNED: TL
DRAWN: JA
CHECKED:
ISSUED BY: ENGINEERING SERVICES ENROUTE/FSS
DATE:
JCN: 1401893
DRAWING NO: ZDV-1401893-E715
REV:

ISSUED FOR:

DRAWING PRODUCED ON WSA MICROSTATION SYSTEM

tsk-1401893-e715.dgn 6/27/2018 11:41:06 AM John CTR Allen
EDM: zdv-1401893-e715.dgn

GENERAL NOTES

NEW BRANCH CIRCUIT SHALL HAVE DEDICATED NEUTRAL AND GROUNDING CONDUCTOR. SHARED NEUTRAL AND GROUNDING CONDUCTORS ARE NOT ALLOWED.

Panel No. LP-CT
Service Voltage 208/120 Volts
3 Phase 4 Wire
Bus ESSENTIAL
Bus Rating 40 Amps
AC Rating 23,000 Amps
Feed PP-CT
Location Pump House S Wall
Mounting Wall Mount

SYSTEM	LOAD	CIRCUIT	AMPS	AMPS	CIRCUIT	LOAD	SYSTEM
CTRB	TOWER RECEPTACLES	-1	20	20	2-	PUMP HOUSE LITES	CTRB
	SPRINKLER CONTROL	-3	20	30	4-	SPARE	
	HEAT TRACE	-5	20	20	6-	PUMP HOUSE RECEPT.	
	SF-101	-7	20	20	8-	SECURITY & FLOOD LTS	
	EXTERIOR LIGHTS	-9	20	20	10-	EF-101A	
	EF-101B	-11	20	20	12-	SPARE	
	SPARE	-13	20	50	14-	SPARE	
	WATER MAKE-UP VALVE LCV-1	-15	20		16-	BLANK	
	BLANK	-17			18-	BLANK	
	FCV-5A	-19	20	20	20-	FCV-5B	
	FCV-5C	-21	20	20	22-	FCV-7 (CT BYPASS)	
	BLANK	-23			24-	BLANK	

Panel No. PP-CT
Service Voltage 480 Volts
3 Phase 3 Wire
Bus ESSENTIAL
Bus Rating 100 Amps
AC Rating 23,000 Amps
Feed PP-MOV: 14,16,18
Location Pump House S Wall
Mounting Wall Mount

SYSTEM	LOAD	CIRCUIT	AMPS	AMPS	CIRCUIT	LOAD	SYSTEM
CTRB	EUH-1	-1			2-		
		-3	20	15	4-	PANEL LP-CT XFMR TR-CT	CTRB
		-5			6-		
	SPARE	-7			8-		
		-9	15	15	10-	SPARE	
		-11			12-		
	SPARE	-13			14-		
		-15	15	15	16-	SPARE	
		-17			18-		
	SPARE	-19			20-		
		-21	15	20	22-	EUH-2	
		-23			24-		
	RE TRAILER	-25			26-	BLANK	
		-27	100		28-	BLANK	
		-29			30-	BLANK	

** PANEL PP-MOV IS LOCATED IN BOILER ROOM B115.

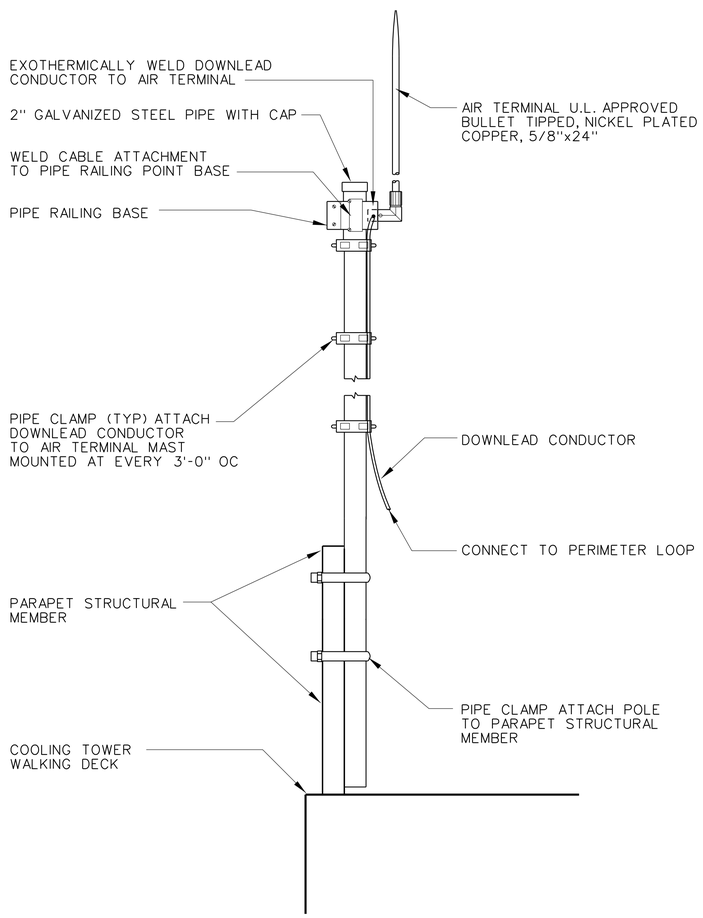

A7 / E801 AIR TERMINAL MOUNTING DETAIL
NTS

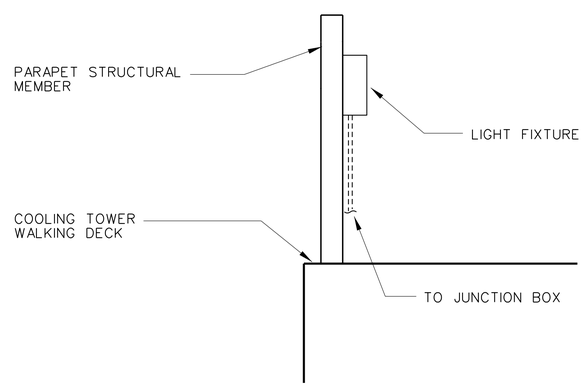

A5 / E801 LIGHTING FIXTURE MOUNTING DETAIL
NTS

REV	APPROVED DATE	DESCRIPTION	JCN	REDLINE DATE	APVD

DEPARTMENT OF TRANSPORTATION
FEDERAL AVIATION ADMINISTRATION
ATO - TECHNICAL OPERATIONS WESTERN SERVICE AREA

ARTCC

MAJOR MECHANICAL MODERNIZATION
COOLING TOWER AND PUMP HOUSE
PANEL SCHEDULE AND DETAILS

DENVER LONGMONT CO

REVIEWED BY
SUBMITTED BY: PAUL TULENKO — PROJECT ENGINEER
APPROVED BY: CALLEN R. COLLINS — MGR: ENGINEERING - SEATTLE
DO NOT SIGN

DESIGNED TL
DRAWN JA
CHECKED
ISSUED BY ENGINEERING SERVICES ENROUTE/FSS
DATE
JCN 1401893
DRAWING NO ZDV-1401893-E801
REV

ISSUED FOR:

DRAWING PRODUCED ON WSA MICROSTATION SYSTEM

zdv-1401893-e801.dgn 6/27/2018 11:48:19 AM John C?R Allen

Panel No. PP-MOV
Service Voltage 480 Volts
3 Phase 3 Wire
Bus ESSENTIAL
Bus Rating 150 Amps
AC Rating 23,000 Amps
Feed MCC-1C
Location B115 E Wall
Mounting Wall Mount

SYSTEM	LOAD	CIRCUIT	AMPS	AMPS	CIRCUIT	LOAD	SYSTEM
	SPARE	-1			2-		
		-3	15	25	4-	PANEL PP-CH TRANSFORMER	CHILLER ROOM
		-5			6-		
	SPARE	-7			8-		
		-9	15	15	10-	SPARE	
		-11			12-		
	SPARE	-13			14-		
		-15	15	100	16-	PANEL E-PP-CT	PUMP HOUSE
		-17			18-		
	SPARE	-19			20-		
		-21	15	30	22-	PANEL PPA TRANSFORMER	BOILER ROOM
		-23			24-		
	SPARE	-25			26-		
		-27	15	20	28-	SPARE	
		-29			30-		
	SPARE	-31			32-		
		-33	15	20	34-	SPARE	
		-35			36-		
	SPARE	-37			38-		
		-39	15	20	40-	SPARE	
		-41			42-		

Panel No. PP-CH
Service Voltage 208/120 Volts
3 Phase 4 Wire
Bus ESSENTIAL
Bus Rating 125 Amps
AC Rating 23,000 Amps
Feed PP-MOV: 2,4,6
Location B115 E Wall
Mounting Wall Mount

SYSTEM	LOAD	CIRCUIT	AMPS	AMPS	CIRCUIT	LOAD	SYSTEM
CHILLER	FCV-1A (CH-100)	-1	20	20	2-	FCV-1B (CH-100)	CHILLER
CHILLER	FCV-2A (CH-200)	-3	20	20	4-	FCV-2B (CH-200)	CHILLER
CHILLER	FCV-3A (CH-300)	-5	20	20	6-	FCV-3B (CH-300)	CHILLER
CHILLER	FCV-4A (CH-400)	-7	20	20	8-	FCV-4B (CH-400)	CHILLER
HEAT EXCH	FCV-1C (HX-1)	-9	20	20	10-	FCV-1D (HX-1)	HEAT EXCH
	SPARE	-11	20	20	12-	FCV-6 (BYPASS)	CWS
	SPARE	-13	20	20	14-	SPARE	
	SPARE	-15	20	20	16-	SPARE	
	BLANK	-17			18-	BLANK	
	SPARE	-19	20	20	20-	SPARE	
	SPARE	-21	20	20	22-	SPARE	
	SPARE	-23	20	20	24-	SPARE	
	SPARE	-25	20	20	26-	SPARE	
	SPARE	-27	20	20	28-	SPARE	
	SPARE	-29	20	20	30-	SPARE	
	BLANK	-31			32-	BLANK	
	BLANK	-33			34-	BLANK	
	BLANK	-35			36-	BLANK	
	BLANK	-37			38-	BLANK	
	BLANK	-39			40-	BLANK	
	BLANK	-41			42-	BLANK	

GENERAL NOTES

NEW BRANCH CIRCUIT SHALL HAVE DEDICATED NEUTRAL AND GROUNDING CONDUCTOR. SHARED NEUTRAL AND GROUNDING CONDUCTORS ARE NOT ALLOWED.

REV	APPROVED DATE	DESCRIPTION	JCN	REDLINE DATE	APVD

DEPARTMENT OF TRANSPORTATION
FEDERAL AVIATION ADMINISTRATION
ATO - TECHNICAL OPERATIONS WESTERN SERVICE AREA

ARTCC

MAJOR MECHANICAL MODERNIZATION
CHILLER ROOM
PANEL SCHEDULE AND DETAILS

DENVER LONGMONT CO

REVIEWED BY

SUBMITTED BY: PAUL TULENKO — PROJECT ENGINEER
APPROVED BY: CALLEN R. COLLINS — MGR: ENGINEERING - SEATTLE

DO NOT SIGN

DESIGNED TL
DRAWN JA
CHECKED

ISSUED BY: ENGINEERING SERVICES ENROUTE/FSS

DATE
JCN 1401893
DRAWING NO ZDV-1401893-E802
REV

ISSUED FOR:

DRAWING PRODUCED ON WSA MICROSTATION SYSTEM

EDM: zdv-1401893-e802.dgn

zdv-1401893-e802.dgn 6/27/2018 11:46:08 AM John CTR Allen

Panel No. EOF
Service Voltage 208/120 Volts
3 Phase 4 Wire

Bus BUILDING SERVICES
Bus Rating 100 Amps
AC Rating 23,000 Amps

Feed Panel DIFF
Location Room B88 W Wall
Mounting Wall Mount

SYSTEM	LOAD	CIRCUIT	AMPS	AMPS	CIRCUIT	LOAD	SYSTEM
	RECEPTICLES IN B88	-1	20	20	2-	TELEPHONE BACKBOARD RECEPT	
	BLANK	-3			4-	BLANK	
	RECEPTICLES IN B88	-5	20		6-	BLANK	
SPARE -	ABOVE AH106 IN RDC	-7	20	20	8-	RECEPTICLES IN B88	
SPARE -	ABOVE AH106 IN RDC	-9	20	20	10-	SPARE	
SPARE -	ABOVE AH106 IN RDC	-11	20	20	12-	SPARE	
	SPARE	-13	20	20	14-	SPARE	
	SPARE	-15	20	20	16-	SPARE	
	LIGHTING IN B88	-17	20	20	18-	SPARE	
	SPARE	-19	20	30	20-	SPARE	
	SPARE	-21	20		22-		
	SPARE	-23	20	20	24-	SPARE	
	SPARE	-25	20	20	26-	SPARE	
	SPARE	-27	20	20	28-	SPARE	
	SPARE	-29	20		30-	BLANK	

GENERAL NOTES:

A. REFER TO SHEETS E203 AND E303 FOR AHUS REMOVAL/INSTALL ADDITIONAL INFORMATION.

SHEET NOTES:

1. INSTALL NEW AHU-22 BACK INTO MCC-1D, BUCKET #12.

REV	APPROVED DATE	DESCRIPTION	JCN	REDLINE DATE	APVD

DEPARTMENT OF TRANSPORTATION
FEDERAL AVIATION ADMINISTRATION
ATO - TECHNICAL OPERATIONS WESTERN SERVICE AREA

ARTCC

MAJOR MECHANICAL MODERNIZATION
CONTROL WING BASEMENT ROOM B88
PANEL SCHEDULE

DENVER LONGMONT CO

REVIEWED BY

SUBMITTED BY: PAUL TULENKO — PROJECT ENGINEER
APPROVED BY: CALLEN R. COLLINS — MGR: ENGINEERING - SEATTLE

DO NOT SIGN

DESIGNED YM
DRAWN JA
CHECKED

ISSUED BY: ENGINEERING SERVICES ENROUTE/FSS

DATE
JCN 1401893
DRAWING NO ZDV-1401893-E811
REV

ISSUED FOR:

EDM: zdv-1401893-e811.dgn

DRAWING PRODUCED ON WSA MICROSTATION SYSTEM

zdv-1401893-e811.dgn 6/27/2018 11:46:57 AM John CTR Allen

GENERAL FIRE SUPPRESSION NOTES

1. FIRE SUPPRESSION WORK ON THIS PROJECT SHALL BE INSTALLED IN ACCORDANCE WITH SPECIFICATIONS, INTERNATIONAL BUILDING CODE, NFPA CODES, APPLICABLE STATE CODES AND REGULATIONS.
2. WORK THAT IS DETAILED ON THESE PLANS IS BASED ON PREVIOUSLY REVIEWED BUILDING DRAWINGS AND SITE VISITS. WHERE FIELD CONDITIONS ARE DIFFERENT THAN SHOWN, ADVISE COR OF VARIANCES WHICH WILL AFFECT PROPOSED WORK PRIOR TO COMMENCING WORK.
3. COORDINATE FIRE SUPPRESSION WORK WITH SITE CONDITIONS AND WORK OF OTHER TRADES.
4. ADVISE THE COR IN WRITING AT LEAST 5 WORKING DAYS PRIOR TO INTERRUPTION OF SERVICES. OBTAIN PRIOR APPROVAL IN WRITING FROM COR.
5. PROVIDE MATERIAL AND INSTALLATION INCLUDING INCIDENTAL WORK AND TEMPORARY CONNECTIONS AS MAY BE REQUIRED.
6. COORDINATE FIRE SUPPRESSION WORK WITH THE FIRE ALARM AND DETECTION WORK.
7. PIPE PENETRATIONS THROUGH SLAB AND FIRE RATED MASONRY WALLS SHALL HAVE PIPE SLEEVES SEALED WITH UL LISTED FIRE RATED ASSEMBLY MATERIAL. CAULK ANNULAR SPACE BETWEEN PIPE AND SLEEVE. PIPES THROUGH WALLS SHALL HAVE ESCUTCHEONS.
8. PROVIDE SEISMIC BRACING IN ACCORDANCE WITH NFPA 13 FOR NEW WORK.
9. RELATED WORK, CONNECTIONS OR REVISIONS TO FIRE SUPPRESSION SYSTEM, IN WHICH SYSTEM IS REQUIRED TO BE TEMPORARILY SHUT DOWN, SHALL BE FULLY COORDINATED WITH COR PRIOR TO COMMENCEMENT OF WORK. PIPING SHALL NOT BE LEFT UNATTENDED WHILE DRAINING OR DRIPPING.
10. WORK REQUIRING CUTTING, PATCHING AND PAINTING SHALL MATCH EXISTING CONDITIONS.
11. GAS AND ARC CUTTING ARE NOT PERMITTED.
12. PERFORM FACILITY WATERFLOW TEST. BASE HYDRAULIC CALCULATIONS ON THE RESULTS OF THE WATERFLOW TEST WITH A SAFETY FACTOR OF 7 PSI.
13. VERIFY PIPE LOCATIONS AND ELEVATIONS. COORDINATE ROUTING OF PIPING TO AVOID INTERFERENCE WITH OTHER TRADES.
14. THE SPRINKLER SYSTEM SHALL BE DESIGNED, INSTALLED AND TESTED IN ACCORDANCE WITH THE 2016 EDITION OF NFPA 13.
15. PROVIDE UPRIGHT SPRINKLERS IN ALL AREAS WITH AN UNFINISHED CEILING UNLESS THE OBSTRUCTIONS REQUIRE THE INSTALLATION OF PENDENT SPRINKLERS.
16. VERIFY ALL LOCATIONS AND MEASUREMENTS AS CONDITIONS MAY VARY THROUGHOUT CONSTRUCTION. ALL CHANGES FROM THE ORIGINAL DESIGN MUST BE APPROVED BY THE COR.
17. DRAWINGS ARE FOR REFERENCE PURPOSES ONLY. APPROVED SHOP DRAWINGS AND HYDRAULIC CALCULATIONS SHALL BE SUBMITTED AND APPROVED PRIOR TO INSTALLATION OF THE SPRINKLER SYSTEM.
18. EXISTING FIRECYCLE III SYSTEMS PROVIDED FOR THE TELCO/NEOF/MEZZANINE (B88/B101, ZONE 1), ELECTRONIC EQUIPMENT ROOM (B120/B120A, ZONE 2), AND THE HCS ROOM AND MECHANICAL ROOM (B134/B119, ZONE 3). ALL THREE RISERS AND CONTROL PANELS ARE LOCATED IN THE UTILITY CHASES.
19. EXISTING BACKFLOW PREVENTER AND WET SYSTEM RISER SERVING THE BOILER ROOM (B115) AND THE CHILLER ROOM (B116) LOCATED IN BASEMENT MECHANICAL ROOM (B114) NEAR GRID C1/1.

FIRE SUPPRESSION DEMOLITION NOTES

1. DEMOLITION WORK FOR THE EXISTING FIRE SUPPRESSION SYSTEM SHALL BE REMOVED FROM SITE (UNLESS NOTED OTHERWISE) AND DISPOSED OF IN ACCORDANCE WITH THE APPLICABLE ENVIRONMENTAL PROTECTION AGENCY AND STATE CODES, REGULATIONS AND AS DIRECTED BY COR. CLEAN-UP SHALL BE DAILY OR AS DIRECTED BY COR.
2. EXISTING WALL PENETRATIONS THAT ARE NOT REUSED SHALL BE REPAIRED TO MATCH EXISTING BUILDING FINISHES. FIRE STOPPED PENETRATIONS WHERE EXISTING PIPING WILL BE REMOVED SHALL BE REPAIRED TO MAINTAIN BUILDING FIRE INTEGRITY.
3. PROVIDE FIRE WATCH AND FIRE EXTINGUISHERS DURING DEMOLITION. COORDINATE WITH FIRE ALARM AND DETECTION WORK AS SHOWN ON FIRE ALARM PLANS.

ABBREVIATIONS

AFF	ABOVE FINISHED FLOOR
AHJ	AUTHORITY HAVING JURISDICTION
AVG	AVERAGE
BOP	BOTTOM OF PIPE
CA	COMPRESSED AIR
CFM	CUBIC FEET PER MINUTE
COR	CONTRACTING OFFICER'S REPRESENTATIVE
ELEV	ELEVATION
FDC	FIRE DEPARTMENT CONNECTION
FHV	FIRE HOSE VALVE
F	FIRE MAIN
FVC	FIRE VALVE CABINET
GALS	GALLONS
GPH	GALLONS PER HOUR
GPM	GALLONS PER MINUTE
GV	GATE VALVE
MAX	MAXIMUM
MIN	MINIMUM
NP	NOT PERMITTED
NC	NONCOMBUSTIBLE
OCC	OCCUPANT
OS&Y	OUTSIDE SCREW AND YOKE
PERS	PERSONS
PSIG	POUNDS PER SQURE INCH GAUGE
SOV	SOLENOID VALVE
SP	SMOKE PARTITION
SQFT	SQUARE FEET
TD	TRAVEL DISTANCE
UH	UNIT HEATER
VLV	VALVE

FIRE SUPPRESSION LEGEND

	SPRINKLER PIPE (EXISTING TO REMAIN)
	SPRINKLER PIPE (EXISTING TO BE DEMOLISHED)
	NEW SPRINKLER PIPE
	PIPE DOWN
	PIPE UP
	OS&Y VALVE WITH TAMPER SWITCH
	CHECK VALVE
	FLOW SWITCH
OH-1	ORDINARY HAZARD GROUP 1
OH-2	ORDINARY HAZARD GROUP 2
	POINT OF CONNECTION
	POINT OF DISCONNECTION
	DEMOLISH
BFP	BACKFLOW PREVENTER
FHV	FIRE HOSE VALVE CABINET
	FREE-STANDING FIRE DEPARTMENT CONNECTION
T	THERMAL DETECTOR
	PENDENT SPRINKLER HEAD
	UPRIGHT SPRINKLER HEAD
	SIDEWALL SPRINKLER HEAD
D	DENOTES DEVICE TO BE DEMOLISHED
E	DENOTES EXISTING DEVICE TO REMAIN
N	DENOTES NEW DEVICE LOCATION
R	DENOTES EXISTING DEVICE TO BE REUSED

REV	APPROVED DATE	DESCRIPTION	JCN	REDLINE DATE	APVD

DEPARTMENT OF TRANSPORTATION
FEDERAL AVIATION ADMINISTRATION
ATO - TECHNICAL OPERATIONS WESTERN SERVICE AREA

ARTCC

MAJOR MECHANICAL MODERNIZATION
FIRE SUPPRESSION ABBREVIATIONS
SYMBOLS AND GENERAL NOTES

DENVER LONGMONT CO

REVIEWED BY

SUBMITTED BY: PAUL TULENKO — PROJECT ENGINEER

APPROVED BY: CALLEN R. COLLINS — MGR: ENGINEERING - SEATTLE

DO NOT SIGN

DESIGNED KC
DRAWN JA
CHECKED

ISSUED BY: ENGINEERING SERVICES ENROUTE/FSS

DATE
JCN 1401893
DRAWING NO ZDV-1401893-F001
REV

ISSUED FOR:

DRAWING PRODUCED ON WSA MICROSTATION SYSTEM

rsb-1401893-1001.dgn 6/27/2018 2:23:56 PM John CTR Allen

EDM: zdv-1401893-1001.dgn

FIRE ALARM NOTIFICATION MATRIX –ADDRESSABLE FACP

● INDICATES ACTION WILL CAUSE SPECIFIC RESULTS

INDICATES ACTION WILL NOT CAUSE SPECIFIC RESULTS

		ACTIONS	SYSTEM OUTPUTS																	
			CONTROL UNIT ANNUNC.									NOTIFICATION								
			ACTUATE COMMON ALARM SIGNAL INDICATOR	ACTUATE AUDIBLE ALARM SIGNAL	ACTUATE COMMON SUPERVISORY SIGNAL INDICATOR	ACTUATE AUDIBLE SUPERVISORY SIGNAL	ACTUATE COMMON TROUBLE SIGNAL INDICATOR	ACTUATE AUDIBLE COMMON TROUBLE SIGNAL	DISPLAY ADDRESS AND DESCRIPTOR	DISPLAY CORRESPONDING LED ON EXISTING GRAPHIC ANNUNCIATOR PANEL	DISPLAY MESSAGE ON NEW LCD ANNUNCIATOR PANEL	ACTUATE ADMIN., OPERATIONS SUPP. & AUTO WING WHITE STROBES/HORNS	ACTUATE POWER SERVICE BUILDING WHITE STROBES/HORNS	ACTUATE CONTROL ROOM STAGE I RED STROBES	ACTUATE CONTROL ROOM STAGE II WHITE STROBES/CHIMES	TRANSMIT FIRE ALARM SIGNAL TO CENTRAL STATION (DACT)	TRANSMIT SUPERVISORY SIGNAL TO CENTRAL STATION (DACT)	TRANSMIT TROUBLE SIGNAL TO CENTRAL STATION (DACT)	RELEASE DOORS ON HOLD OPEN DEVICES	
		SYSTEM INPUTS	A	B	C	D	E	F	G	H	I	J	K	L	M	N	O	P	Q	
	Administration, Automation, Operations Support and Control Wing Events	On/Off Fire Sprinkler Panel Alarm	●	●					●	●	●	●	●	●		●			●	1
2		On/Off Fire Sprinkler Panel Trouble					●	●	●	●	●							●		2
3		Ceiling Smoke Detector	●	●					●	●	●	●	●	●		●			●	3
4		Under-Floor Smoke Detector	●	●					●	●	●	●	●	●		●			●	4
5		Above-Ceiling Smoke Detector	●	●					●	●	●	●	●	●		●			●	5
6		Air Sampling Smoke Detector Panel Alarm	●	●					●	●	●	●	●	●		●			●	6
7		Air Sampling Smoke Detector Panel Trouble					●	●	●	●	●							●		7
8		Manual Pull Station	●	●					●	●	●	●	●	●		●			●	8
9		Beam Smoke Detector	●	●					●	●	●	●	●	●		●			●	9
10		Heat Detector (Non-On/Off Sprinkler Type)	●	●					●	●	●	●	●	●		●			●	10
11		Sprinkler Waterflow Device	●	●					●	●	●	●	●	●		●			●	11
12		Sprinkler Hi/Low Air Pressure Switch			●	●			●	●	●						●			12
13		Sprinkler Control Valve Tamper Switch			●	●			●	●	●						●			13
14		AHU Smoke Detector			●	●			●	●	●						●			14
15		Pull Station in DSR and M-1 Control Room	●	●					●	●	●	●	●		●	●			●	15
		SYSTEM INPUTS	A	B	C	D	E	F	G	H	I	J	K	L	M	N	O	P		

NOTE: REFERENCE SPECIFICATION 28 31 00 FOR DETAILED SEQUENCE OF OPERATION.

FIRE ALARM LEGEND

- UNDERFLOOR CONDUIT
- CONDUIT
- FACP — FIRE ALARM CONTROL PANEL
- NAC — NAC POWER SUPPLY PANEL
- GAP — GRAPHIC ANNUNCIATOR PANEL
- EPP — EMERGENCY POWER PANEL SUPPLYING AHU DUCT DETECTORS
- RPS — REMOTE POWER STATION
- FS — SPRINKLER FLOW SWITCH
- TS — SPRINKLER TAMPER SWITCH
- PS — PRESSURE SWITCH
- ACD — ADDRESSABLE CONTROL DEVICE
- AID — ADDRESSABLE INTERFACE DEVICE
- DH — DOOR HOLDER
- F — MANUAL PULL STATION
- J — JUNCTION BOX
- C — CONTROL MODULE
- XX — COMBINATION STROBE HORN (XX DENOTES CANDELA RATING)
- XX — STROBE (XX DENOTES CANDELA RATING)
- DEVICE TO BE DEMOLISHED
- P — PHOTOELECTRIC SMOKE DETECTOR
- P — PHOTOELECTRIC DUCT DETECTOR
- I — IONIZATION SMOKE DETECTOR
- B — WARNING BELL
- SP — PUBLIC ADDRESS SPEAKER
- A — DENOTES ABOVE CEILING DEVICE
- D — DENOTES DEVICE TO BE DEMOLISHED
- E — DENOTES EXISTING DEVICE TO REMAIN
- N — DENOTES NEW DEVICE LOCATION
- R — DENOTES EXISTING DEVICE TO BE REUSED
- U — DENOTES UNDERFLOOR DEVICE

ABBREVIATIONS

AFF	ABOVE FINISHED FLOOR
AHJ	AUTHORITY HAVING JURISDICTION
AVG	AVERAGE
COR	CONTRACTING OFFICER'S REPRESENTATIVE
ELEV	ELEVATION
EOL	END OF LINE RESISTOR
IDC	INITIATING DEVICE CIRCUIT
MAX	MAXIMUM
MIN	MINIMUM
NAC	NOTIFICATION APPLIANCE CIRCUIT
NP	NOT PERMITTED
NC	NONCOMBUSTIBLE
OCC	OCCUPANT
PERS	PERSONS
SLC	SIGNALING LINE CIRCUIT
SQFT	SQUARE FEET
SP	SMOKE PARTITION

GENERAL FIRE ALARM NOTES

1. FIRE ALARM WORK ON THIS PROJECT SHALL BE INSTALLED IN ACCORDANCE WITH SPECIFICATIONS, INTERNATIONAL BUILDING CODE, NFPA CODES, APPLICABLE STATE CODES AND REGULATIONS, AND AS DIRECTED BY COR.
2. THE FINAL FIRE ALARM TEST SHALL BE WITNESSED BY THE COR.
3. FILE A "RECORD OF COMPLETION" IN ACCORDANCE WITH NFPA 72 TO COR.
4. THE FIRE ALARM SYSTEM SHALL BE DESIGNED, INSTALLED AND TESTED IN ACCORDANCE WITH THE 2016 EDITION OF NFPA 72.
5. CONDUIT PENETRATIONS THROUGH SLAB AND FIRE RATED MASONRY WALLS SHALL BE SEALED WITH UL LISTED FIRE RATED ASSEMBLY MATERIAL.
6. EXISTING FACP LOCATED IN FIRST FLOOR ADMIN WING LOBBY ROOM 1006.
7. DRAWINGS ARE FOR REFERENCE PURPOSES ONLY. APPROVED SHOP DRAWINGS VOLTAGE DROP AND BATTERY CALCULATIONS SHALL BE SUBMITTED AND APPROVED PRIOR TO INSTALLATION OF THE FIRE ALARM SYSTEM.
8. DOOR OPEN DEVICES SHALL ALLOW DOOR LEAVES TO CLOSE UPON LOSS OF POWER. DOOR HOLDER AND ACD USED TO INTERFACE DOOR HOLDER TO FACP SHALL BE WIRED AS CLASS "A" AND BE MONITORED FOR INTEGRITY BY THE FACP. ACD SHALL BE LISTED FOR USE WITH EXISTING FACP. ANY ACD USED SHALL BE INSTALLED WITHIN 3 FEET OF THE DEVICE IT CONTROLS.

FIRE ALARM DEMOLITION NOTES

1. DEMOLITION WORK FOR THE EXISTING FIRE ALARM SYSTEM SHALL BE REMOVED FROM SITE (UNLESS NOTED OTHERWISE) AND DISPOSED OF IN ACCORDANCE WITH THE APPLICABLE ENVIRONMENTAL PROTECTION AGENCY AND STATE CODES, REGULATIONS AND AS DIRECTED BY COR. CLEAN-UP SHALL BE DAILY OR AS DIRECTED BY COR.
2. WORK SHOWN TO BE REMOVED, WHICH IS DETAILED ON THESE PLANS IS BASED ON PREVIOUSLY REVIEWED BUILDING DRAWINGS AND SITE VISITS. WHERE EXISTING FIELD CONDITIONS ARE DIFFERENT THAN SHOWN, ADVISE THE COR OF VARIANCES WHICH WILL AFFECT THE PROPOSED WORK PRIOR TO THE COMMENCEMENT OF WORK.
3. EXISTING WALL PENETRATIONS THAT ARE NOT REUSED SHALL BE REPAIRED TO MATCH EXISTING BUILDING FINISHES. FIRE STOPPED PENETRATIONS WHERE EXISTING CONDUIT/WIRE WILL BE REMOVED SHALL BE REPAIRED TO MAINTAIN BUILDING FIRE INTEGRITY.
4. WORK REQUIRING CUTTING, PATCHING AND PAINTING SHALL MATCH EXISTING CONDITIONS.
5. PROVIDE FIRE WATCH AND FIRE EXTINGUISHERS DURING DEMOLITION. COORDINATE WITH FIRE SUPPRESSION WORK AS SHOWN ON FIRE SUPPRESSION PLANS.

REV	APPROVED DATE	DESCRIPTION	JCN	REDLINE DATE	APVD

DEPARTMENT OF TRANSPORTATION
FEDERAL AVIATION ADMINISTRATION
ATO - TECHNICAL OPERATIONS WESTERN SERVICE AREA

ARTCC

MAJOR MECHANICAL MODERNIZATION
FIRE ALARM ABBREVIATIONS,
SYMBOLS AND GENERAL NOTES

LONGMONT CO

REVIEWED BY

SUBMITTED BY: PAUL TULENKO — PROJECT ENGINEER

APPROVED BY: CALLEN R. COLLINS — MGR: ENGINEERING - SEATTLE

DO NOT SIGN

DESIGNED KC
DRAWN JA
CHECKED

ISSUED BY: ENGINEERING SERVICES ENROUTE/FSS

DATE
JCN 1401893
DRAWING NO ZDV-1401893-F002
REV

ISSUED FOR:

DRAWING PRODUCED ON WSA MICROSTATION SYSTEM

EDM: zdv-1401893-1002.dgn

zdv-1401893-1002.dgn 6/27/2018 2:24:32 PM John CTR Allen

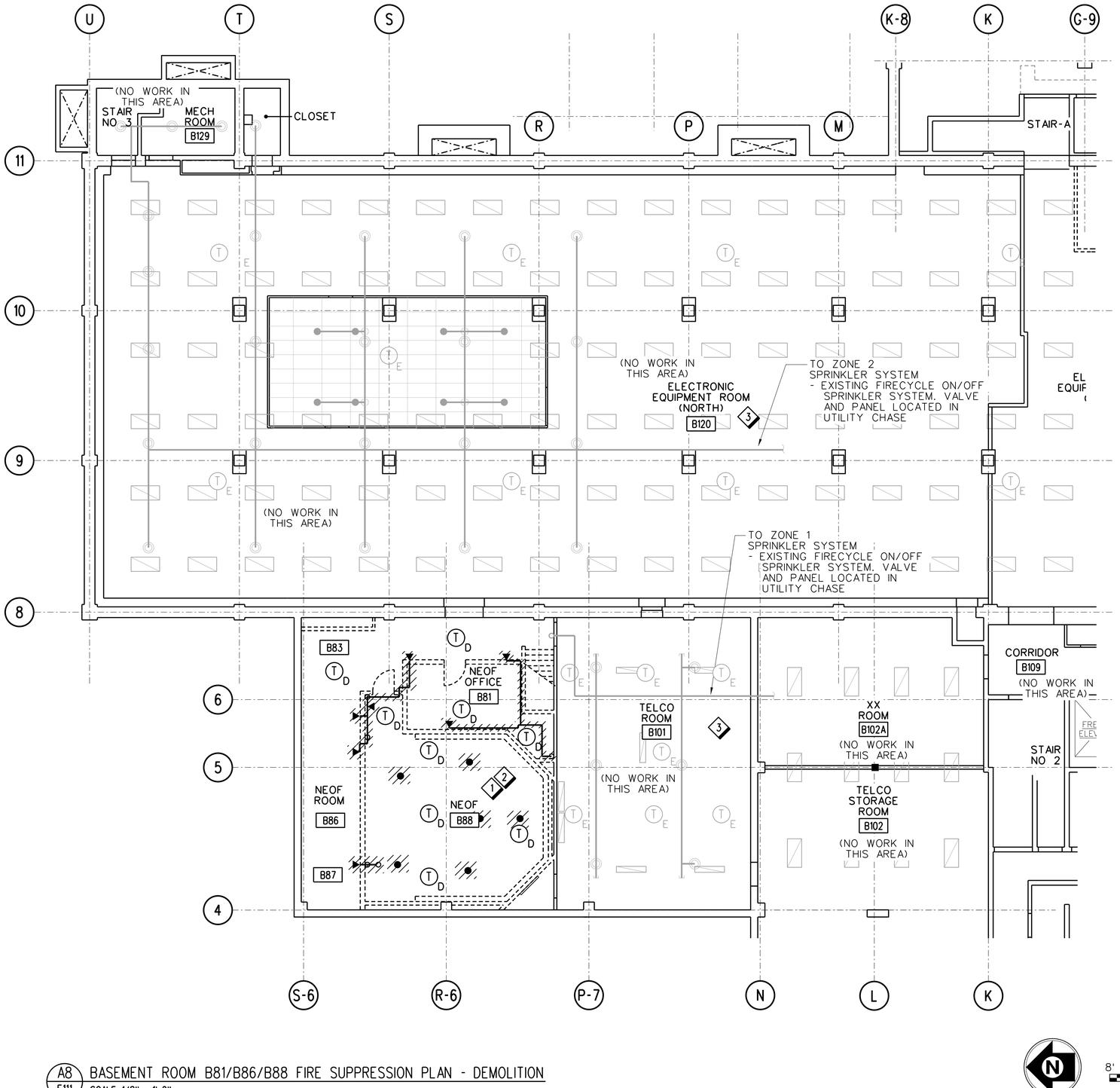

A8 / F111 BASEMENT ROOM B81/B86/B88 FIRE SUPPRESSION PLAN - DEMOLITION

SCALE: 1/8" = 1'-0"

8' 0 8' 16'

SCALE: 1/8" = 1'-0"

GENERAL NOTES

A. FOR GENERAL FIRE SUPPRESSION NOTES, LEGEND AND ABBREVIATIONS, REFER TO DRAWING F001.

B. ALL FIRE SUPPRESSION EQUIPMENT IS EXISTING. MODIFY SYSTEM AS NECESSARY TO COORDINATE WITH ANY ARCHITECTURAL, MECHANICAL OR ELECTRICAL CHANGES IN THE AREA.

SHEET NOTES

1. REMOVE SIDEWALLS/PENDENTS AND DROPS/ARMOVERS IN THE AREA OF WORK BACK TO CROSS MAIN. THIS INCLUDES ALL SYSTEM APPURTENANCES IN THE MEZZANINE.
2. REMOVE THERMAL DETECTORS IN THE AREA OF WORK.
3. ENTIRE SPRINKLER LAYOUT FOR BASEMENT NOT SHOWN FOR CLARITY.

KEY PLAN:

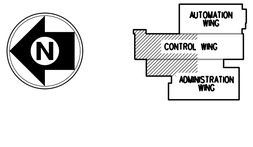

REV	APPROVED DATE	DESCRIPTION	JCN	REDLINE DATE	APVD

DEPARTMENT OF TRANSPORTATION
FEDERAL AVIATION ADMINISTRATION
ATO - TECHNICAL OPERATIONS WESTERN SERVICE AREA

ARTCC

MAJOR MECHANICAL MODERNIZATION BASEMENT ROOM B81/B86/B88 FIRE SUPPRESSION PLAN - DEMOLITION

DENVER LONGMONT CO

ISSUED FOR:

REVIEWED BY	SUBMITTED BY: PAUL TULENKO (DO NOT SIGN) PROJECT ENGINEER	APPROVED BY: CALLEN R. COLLINS (DO NOT SIGN) MGR: ENGINEERING - SEATTLE
DESIGNED KC	ISSUED BY: ENGINEERING SERVICES ENROUTE/FSS	DATE / JCN 1401893
DRAWN JA		DRAWING NO ZDV-1401893-F111 / REV
CHECKED		

rdp-1401893-f111.dgn 6/27/2013 2:29:04 PM John CTR Allen

EDMS zdx-1401893-f111.dgn

DRAWING PRODUCED ON WSA MICROSTATION SYSTEM

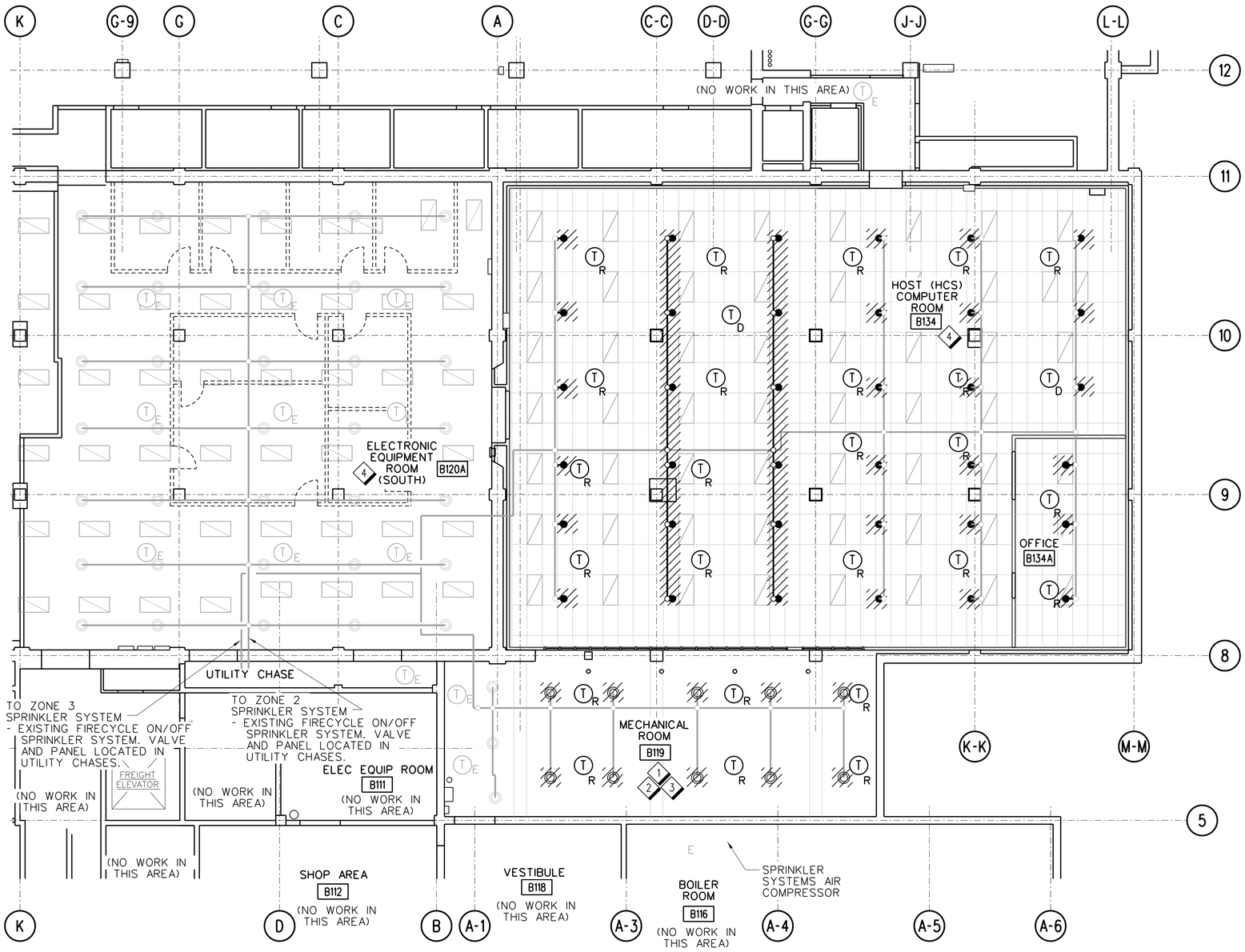

B8 / F112 BASEMENT ROOM B119/B120A/B134 FIRE SUPPRESSION PLAN - DEMOLITION

SCALE: 1/8" = 1'-0"

8' 0 8' 16'

SCALE: 1/8" = 1'-0"

GENERAL SHEET NOTES:

A. FOR GENERAL FIRE SUPPRESSION NOTES, LEGEND AND ABBREVIATIONS, REFER TO DRAWING F001.

B. ALL FIRE SUPPRESSION EQUIPMENT IS EXISTING. MODIFY SYSTEM IF NECESSARY TO COORDINATE WITH ANY ARCHITECTURAL, MECHANICAL OR ELECTRICAL CHANGES IN THE AREA.

SHEET NOTES:

1. DROP CEILING WILL BE DEMOLISHED.
2. MODIFY SPRINKLER SYSTEM FOR NEW SPRINKLER HEADS. COORDINATE NEW SPRINKLER LOCATIONS AND ELEVATIONS WITH CEILING OR SLAB MOUNTED EQUIPMENT. UTILIZE EXISTING SPRINKLER PIPING WHERE POSSIBLE. THIS INCLUDES APPROXIMATELY 78 HEADS TO BE REMOVED AND REPLACED. REPLACE WITH 155° VIKING UPRIGHTS UNLESS EXISTING SPRINKLERS ARE OF A DIFFERENT TEMPERATURE, THEN MATCH EXISTING RATING, WHERE A CEILING IS NOT BEING RE-INSTALLED AND PENDENTS WHERE CEILING IS BEING REPLACED. REUSING EXISTING SPRINKLER HEADS IS PROHIBITED. COORDINATE WITH OTHER TRADES FOR THE LOCATION OF CONDUITS, CABLE TRAYS, AND OTHER OBSTRUCTIONS THAT WILL REQUIRE THE USE OF FITTINGS TO ROUTE SPRINKLER HEAD WITHIN THE MANUFATURER'S RECOMMENDED DISTANCE FROM THE CEILING DECK OR SLAB.
3. REMOVE ALL DROP CEILING MOUNTED THERMAL DETECTORS AND REPLACE THEM AT THE CEILING DECK OR SLAB TO ACTUATE FIRECYCLE SYSTEM.
4. DEMOLISH PIPING AND HEAD LOCATIONS AS NECESSARY (EXISTING SYSTEMS DESIGNED AS LIGHT HAZARD 0.10 GPM/SQFT OVER 1500 SQFT).

KEY PLAN:

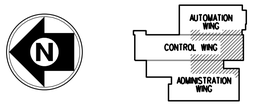

REV	APPROVED DATE	DESCRIPTION	JCN	REDLINE DATE	APVD

DEPARTMENT OF TRANSPORTATION
FEDERAL AVIATION ADMINISTRATION
ATO - TECHNICAL OPERATIONS WESTERN SERVICE AREA

ARTCC

MAJOR MECHANICAL MODERNIZATION
BASEMENT ROOM B119/B120A/B134
FIRE SUPPRESSION PLAN - DEMOLITION

DENVER LONGMONT CO

REVIEWED BY

SUBMITTED BY: PAUL TULENKO — PROJECT ENGINEER

APPROVED BY: CALLEN R. COLLINS — MGR: ENGINEERING - SEATTLE

DO NOT SIGN

DESIGNED KC
DRAWN JA
CHECKED

ISSUED BY: ENGINEERING SERVICES ENROUTE/FSS

DATE
JCN 1401893
DRAWING NO ZDV-1401893-F112
REV

ISSUED FOR:

DRAWING PRODUCED ON WSA MICROSTATION SYSTEM

zdv-1401893-f112.dgn 6/27/2018 2:29:39 PM John CTR Allen

EDM: zdv-1401893-f112.dgn

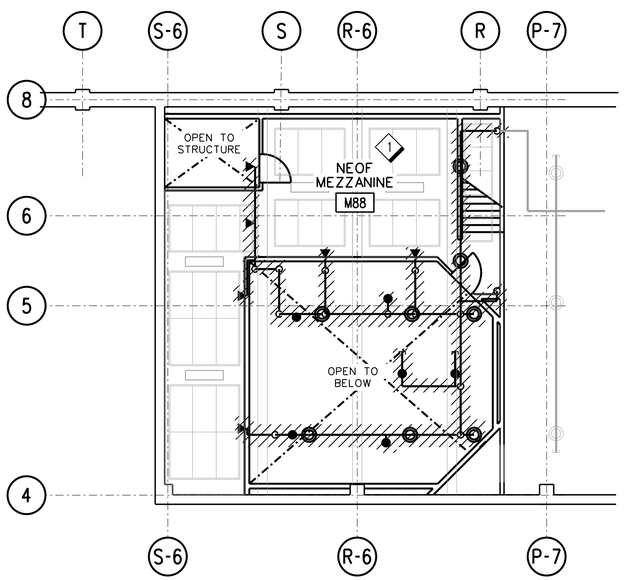

B7 / F113 NEOF MEZZANINE ROOM M88 FIRE SUPPRESSION PLAN - DEMOLITION

SCALE: 1/8" = 1'-0"

GENERAL NOTES

A. FOR GENERAL FIRE SUPPRESSION NOTES, LEGEND AND ABBREVIATIONS, REFER TO DRAWING F001.

B. ALL FIRE SUPPRESSION EQUIPMENT IS EXISTING. MODIFY SYSTEM AS NECESSARY TO COORDINATE WITH ANY ARCHITECTURAL, MECHANICAL OR ELECTRICAL CHANGES IN THE AREA.

SHEET NOTES

1. REMOVE SIDEWALLS/PENDENTS AND DROPS/ARMOVERS IN THE AREA OF WORK BACK TO CROSS MAIN. THIS INCLUDES ALL SYSTEM APPURTENANCES IN THE MEZZANINE.

KEY PLAN:

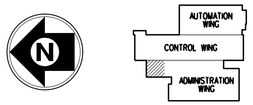

REV	APPROVED DATE	DESCRIPTION	JCN	REDLINE DATE	APVD

DEPARTMENT OF TRANSPORTATION
FEDERAL AVIATION ADMINISTRATION
ATO - TECHNICAL OPERATIONS WESTERN SERVICE AREA

ARTCC

MAJOR MECHANICAL MODERNIZATION
NEOF MEZZANINE ROOM M88
FIRE SUPPRESSION PLAN - DEMOLITION

DENVER LONGMONT CO

REVIEWED BY

SUBMITTED BY: PAUL TULENKO — PROJECT ENGINEER

APPROVED BY: CALLEN R. COLLINS — MGR: ENGINEERING - SEATTLE

DO NOT SIGN

DESIGNED: KC
DRAWN: JA
CHECKED:

ISSUED BY: ENGINEERING SERVICES ENROUTE/FSS

DATE: 1401893
JCN:
DRAWING NO: ZDV-1401893-F113
REV:

ISSUED FOR:

N

8' 0 8' 16'
SCALE: 1/8" = 1'-0"

rdp-1401893-f113.dgn 6/27/2018 2:30:23 PM John CTR Allen

DGN: zdv-1401893-f113.dgn

DRAWING PRODUCED ON WSA MICROSTATION SYSTEM

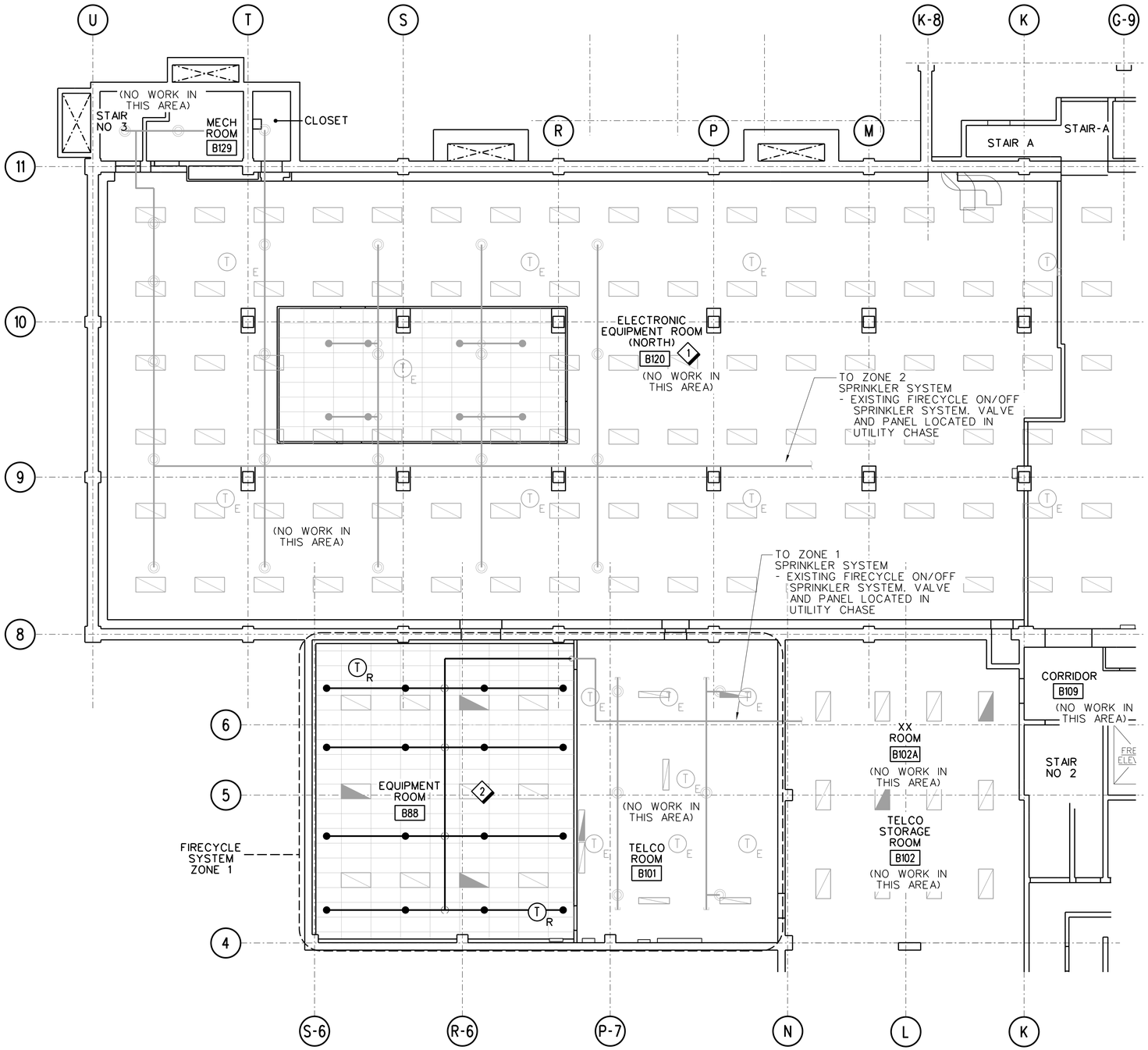

A8 / F211 BASEMENT ROOM B88 FIRE SUPPRESION PLAN
SCALE: 1/8" = 1'-0"

8' 0 8' 16'
SCALE: 1/8" = 1'-0"

GENERAL SHEET NOTES:

A. FOR GENERAL FIRE SUPPRESSION NOTES, LEGEND AND ABBREVIATIONS, REFER TO DRAWING F001.

B. MODIFY SYSTEM AS NECESSARY TO COORDINATE WITH ANY ARCHITECTURAL, MECHANICAL OR ELECTRICAL CHANGES IN THE AREA OF WORK.

C. NEW HEAD LAYOUT SHOWN FOR SCHEMATIC PURPOSE ONLY.

SHEET NOTES:

1. ENTIRE SPRINKLER LAYOUT FOR ELECTRONIC EQUIPMENT ROOM (B120) NOT SHOWN FOR CLARITY.
2. PROVIDE NEW EXTENSION TO FIRECYCLE ZONE 1. PROTECT AS ORDINARY HAZARD GROUP 1. SUBMIT HYDRAULIC CALCULATION, VOID ABOVE CEILING DOES NOT REQUIRE SPRINKLER PROTECTION.

KEY PLAN:

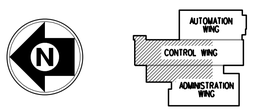

REV	APPROVED DATE	DESCRIPTION	JCN	REDLINE DATE	APVD

DEPARTMENT OF TRANSPORTATION
FEDERAL AVIATION ADMINISTRATION
ATO - TECHNICAL OPERATIONS — WESTERN SERVICE AREA

ARTCC
MAJOR MECHANICAL MODERNIZATION
BASEMENT ROOM B88
FIRE SUPPRESSION PLAN

DENVER — LONGMONT — CO

REVIEWED BY	SUBMITTED BY: PAUL TULENKO (DO NOT SIGN) — PROJECT ENGINEER	APPROVED BY: CALLEN R. COLLINS (DO NOT SIGN) — MGR: ENGINEERING - SEATTLE
DESIGNED: KC	ISSUED BY: ENGINEERING SERVICES ENROUTE/FSS	DATE / JCN: 1401893
DRAWN: JA		DRAWING NO: ZDV-1401893-F211 — REV
CHECKED		

ISSUED FOR:

rib-1401893-f211.dgn 6/27/2018 2:33:15 PM John CTR Allen

EDM: zdv-1401893-f211.dgn

DRAWING PRODUCED ON WSA MICROSTATION SYSTEM

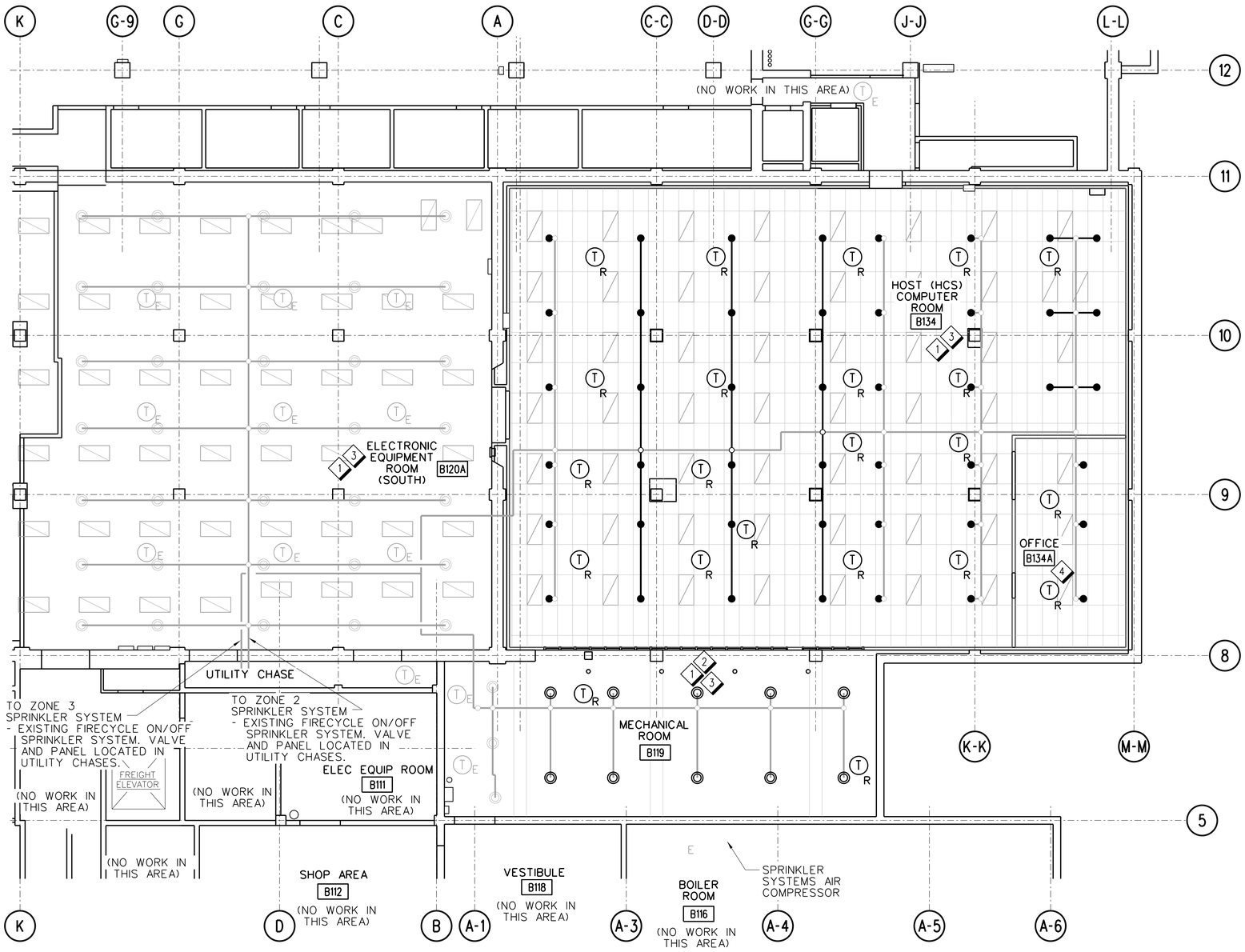

B8 / F212 BASEMENT ROOM B119/B120A/B134 FIRE SUPPRESSION PLAN

SCALE: 1/8" = 1'-0"

8' 0 8' 16'

SCALE: 1/8" = 1'-0"

GENERAL SHEET NOTES:

A. FOR GENERAL FIRE SUPPRESSION NOTES, LEGEND AND ABBREVIATIONS, REFER TO DRAWING F001.

B. MODIFY SYSTEM AS NECESSARY TO COORDINATE WITH ANY ARCHITECTURAL, MECHANICAL OR ELECTRICAL CHANGES IN THE AREA OF WORK.

C. NEW HEAD LAYOUT SHOWN FOR SCHEMATIC PURPOSE ONLY.

SHEET NOTES:

1. SPRINKLER CONTRACTOR TO ENSURE PROPER SPACING OF ALL ACTUATING DEVICES AFTER MODIFICATIONS TO SPRINKLER HEAD LOCATIONS.
2. INSTALL THERMAL DETECTORS AT SLAB DECK FOR CONNECTION TO THE FIRECYCLE SPRINKLER SYSTEM ZONE 3 CONTROL PANEL IN UTLITY CHASE IN ACCORDANCE WITH MANUFACTURER'S GUIDELINES AND NFPA 72 TABLE 17.6.3.5.1.
   MAXIMUM ALLOWED AREA PER DETECTOR:
   1129 SQUARE FEET (AS MODIFIED BY NFPA 72 REQUIREMENTS)
3. MODIFY SYSTEMS AS NECESSARY TO BE IN ACCORDANCE WITH NFPA 13 REQUIREMENTS FOR ORDINARY HAZARD GROUP 1, MAX SPACING 15FT, MAX COVERAGE PER HEAD 130 SQFT. DESIGNED FOR 0.15 GPM OVER 1500 SQFT. SUBMIT HYDRAULIC CALCULATIONS.
4. PROTECT AREA AS LIGHT HAZARD. APPLY SMALL ROOM RULE FOR SPACING FROM WALLS.

KEY PLAN:

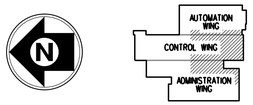

REV	APPROVED DATE	DESCRIPTION	JCN	REDLINE DATE	APVD

DEPARTMENT OF TRANSPORTATION
FEDERAL AVIATION ADMINISTRATION
ATO - TECHNICAL OPERATIONS WESTERN SERVICE AREA

ARTCC

MAJOR MECHANICAL MODERNIZATION
BASEMENT ROOM B119/B120A/B134
FIRE SUPPRESSION PLAN

DENVER LONGMONT CO

REVIEWED BY	SUBMITTED BY: PAUL TULENKO (DO NOT SIGN)	APPROVED BY: CALLEN R. COLLINS (DO NOT SIGN)
	PROJECT ENGINEER	MGR: ENGINEERING - SEATTLE
	DESIGNED KC	ISSUED BY: ENGINEERING SERVICES ENROUTE/FSS
	DRAWN JA	DATE / JCN 1401893
	CHECKED	DRAWING NO ZDV-1401893-F212 / REV

ISSUED FOR:

rsb-1401893-f212.dgn 6/27/2018 2:37:50 PM John CTR Allen

EDM - zdv-1401893-f212.dgn

DRAWING PRODUCED ON WSA MICROSTATION SYSTEM

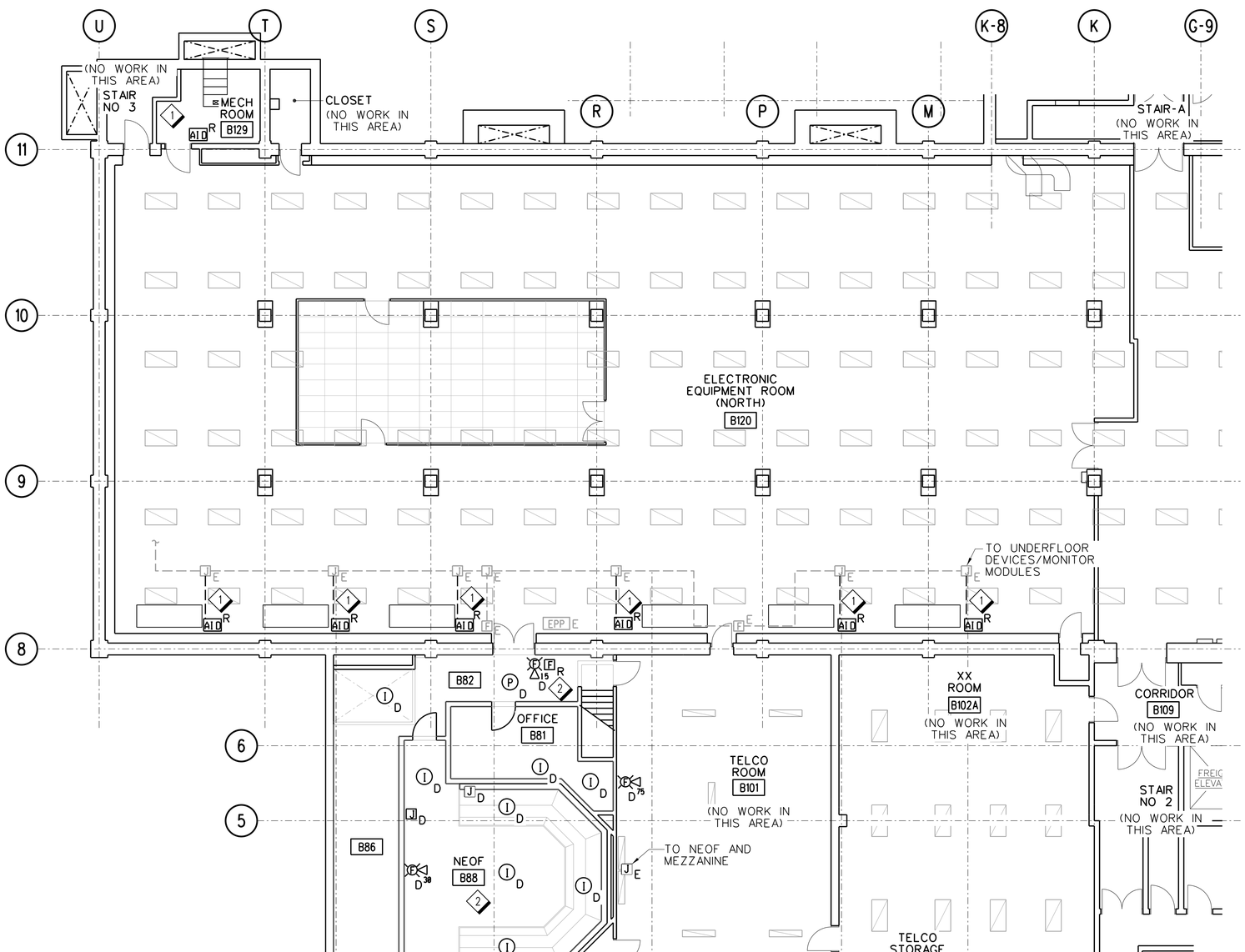

A8 / F311 BASEMENT ROOM B81/B86/B88/B120/B129 FIRE ALARM PLAN - DEMOLITION

SCALE: 1/8" = 1'-0"

8' 0 8' 16'

SCALE: 1/8" = 1'-0"

GENERAL SHEET NOTES:

A. FOR GENERAL FIRE ALARM NOTES, LEGEND AND ABBREVIATIONS, REFER TO DRAWING F002.

B. MODIFY SYSTEM AS NECESSARY TO COORDINATE WITH ANY ARCHITECTURAL, MECHANICAL OR ELECTRICAL CHANGES IN THE AREA.

C. UNDERFLOOR AND ABOVE CEILING DEVICES NOT SHOWN.

D. ALL DEVICES NORTH OF GRID LINE K AND EAST OF GRID LINE 8 NOT SHOWN FOR CLARITY.

SHEET NOTES:

1. REUSE EXISTING AID FOR EACH MECHANICAL AHU BEING REPLACED. MOUNT ON WALL IN ACCESSIBLE LOCATION. FIRE ALARM CONTRACTOR TO WIRE NEW INTEGRAL AHU DUCT DETECTOR(S) TO AID. FIRE ALARM CONTRACTOR TO REMOVE EXISTING INTEGRAL AHU DUCT DETECTORS AND MONITOR MODULES.

2. FIRE ALARM CONTRACTOR TO DEMOLISH ALL CEILING/WALL MOUNTED DEVICES IN NEOF AREA OF WORK AND MEZZANINE AS IDENTIFIED ON DRAWING A111 PRIOR TO NEW WORK. EXISTING PULL STATIONS TO BE REMOVED AND REINSTALLED.

KEY PLAN:

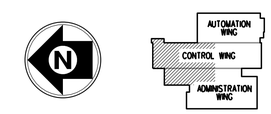

REV	APPROVED DATE	DESCRIPTION	JCN	REDLINE DATE	APVD

DEPARTMENT OF TRANSPORTATION
FEDERAL AVIATION ADMINISTRATION
ATO - TECHNICAL OPERATIONS — WESTERN SERVICE AREA

ARTCC

MAJOR MECHANICAL MODERNIZATION BASEMENT ROOM B81/B86/B88/B120/B129 FIRE ALARM PLAN - DEMOLITION

DENVER — LONGMONT — CO

REVIEWED BY

SUBMITTED BY: PAUL TULENKO — PROJECT ENGINEER

APPROVED BY: CALLEN R. COLLINS — MGR: ENGINEERING - SEATTLE

DO NOT SIGN

DESIGNED: KC
DRAWN: JA
CHECKED

ISSUED BY: ENGINEERING SERVICES ENROUTE/FSS

DATE
JCN: 1401893
DRAWING NO: ZDV-1401893-F311
REV

ISSUED FOR:

DRAWING PRODUCED ON WSA MICROSTATION SYSTEM

zdv-1401893-i311.dgn 6/27/2018 - 12:39:07 PM John CTR Allen

EDMS: zdv-1401893-i311.dgn

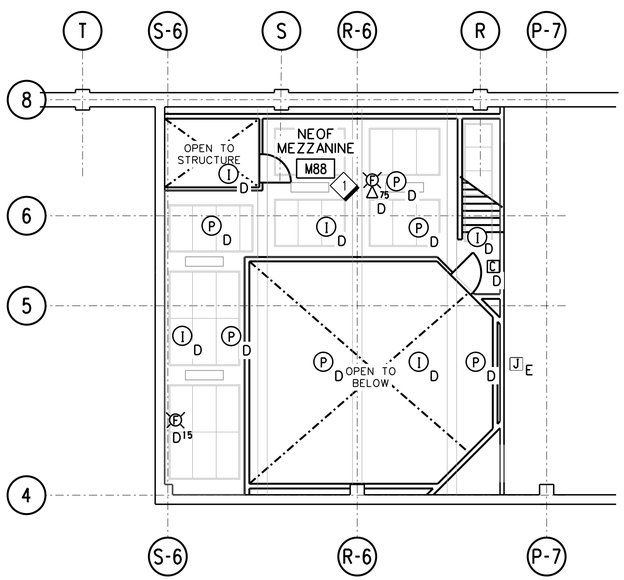

B7 / F313 NEOF MEZZANINE ROOM M88 FIRE ALARM DEMOLITION PLAN
SCALE: 1/8" = 1'-0"

GENERAL SHEET NOTES:

A. FOR GENERAL FIRE ALARM NOTES, LEGEND AND ABBREVIATIONS, REFER TO DRAWING F002.

B. MODIFY SYSTEM AS NECESSARY TO COORDINATE WITH ANY ARCHITECTURAL, MECHANICAL OR ELECTRICAL CHANGES IN THE AREA.

C. UNDERFLOOR AND ABOVE CEILING DEVICES NOT SHOWN.

D. ALL DEVICES NORTH OF GRID LINE P-7 AND EAST OF GRID LINE 8 NOT SHOWN FOR CLARITY.

SHEET NOTES:

1. FIRE ALARM CONTRACTOR TO DEMOLISH ALL CEILING/WALL MOUNTED DEVICES IN NEOF AREA OF WORK AND MEZZANINE AS IDENTIFIED ON DRAWING A113 PRIOR TO NEW WORK. EXISTING PULL STATIONS TO BE REMOVED AND REINSTALLED.

KEY PLAN:

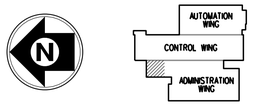

REV	APPROVED DATE	DESCRIPTION	JCN	REDLINE DATE	APVD

DEPARTMENT OF TRANSPORTATION
FEDERAL AVIATION ADMINISTRATION
ATO - TECHNICAL OPERATIONS — WESTERN SERVICE AREA

ARTCC
MAJOR MECHANICAL MODERNIZATION
NEOF MEZZANINE ROOM M88
FIRE ALARM PLAN - DEMOLITION

DENVER — LONGMONT — CO

REVIEWED BY

SUBMITTED BY: PAUL TULENKO — PROJECT ENGINEER
APPROVED BY: CALLEN R. COLLINS — MGR: ENGINEERING - SEATTLE

DO NOT SIGN

DESIGNED	KC	ISSUED BY: ENGINEERING SERVICES ENROUTE/FSS	DATE / JCN: 1401893
DRAWN	JA		DRAWING NO: ZDV-1401893-F313 — REV
CHECKED			

ISSUED FOR:

DRAWING PRODUCED ON WSA MICROSTATION SYSTEM

N

8' 0 8' 16'
SCALE: 1/8" = 1'-0"

rdp-1401893-1313.dgn 6/27/2018 2:40:54 PM John CTR Allen

DGN: zdv-1401893-1313.dgn

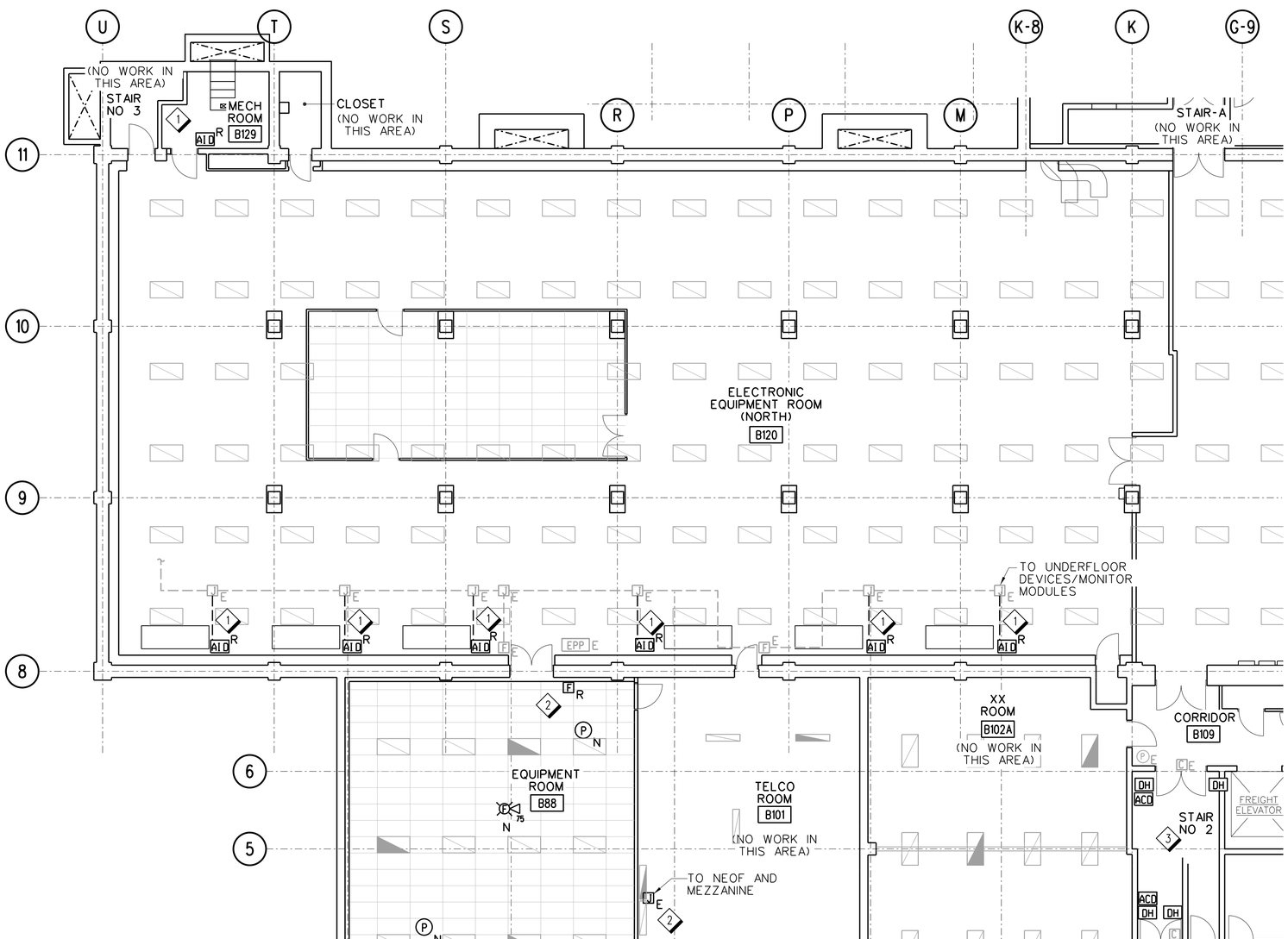

A8 / F411 BASEMENT ROOM B88/B120/B129 FIRE ALARM PLAN

SCALE: 1/8" = 1'-0"

8' 0 8' 16'

SCALE: 1/8" = 1'-0"

GENERAL SHEET NOTES:

A. FOR GENERAL FIRE ALARM NOTES, LEGEND AND ABBREVIATIONS, REFER TO DRAWING F002.

B. MODIFY SYSTEM AS NECESSARY TO COORDINATE WITH ANY ARCHITECTURAL, MECHANICAL OR ELECTRICAL CHANGES IN THE AREA.

C. UNDERFLOOR AND ABOVE CEILING DEVICES NOT SHOWN.

D. ALL DEVICES NORTH OF GRID LINE K AND EAST OF GRID LINE 8 NOT SHOWN FOR CLARITY.

SHEET NOTES:

1. REUSE EXISTING AID FOR EACH MECHANICAL AHU BEING REPLACED. MOUNT ON WALL IN ACCESSIBLE LOCATION. FIRE ALARM CONTRACTOR TO WIRE NEW INTEGRAL AHU DUCT DETECTOR(S) TO AID. FIRE ALARM CONTRACTOR TO REMOVE EXISTING INTEGRAL AHU DUCT DETECTORS AND MONITOR MODULES.

2. FIRE ALARM CONTRACTOR TO DEMOLISH ALL CEILING/WALL MOUNTED DEVICES IN NEOF AREA OF WORK AND MEZZANINE AS IDENTIFIED ON DRAWING A111 PRIOR TO NEW WORK. EXISTING PULL STATIONS TO BE REMOVED AND REINSTALLED.

3. FIRE ALARM CONTRACTOR TO COORDINATE LOCATION OF DOOR HOLD OPEN DEVICES WITH DOOR INSTALLER AS DESCRIBED ON SHEET A801. DOORS TO BE RELEASED ON ANY FIRE ALARM SIGNAL. ACD TO BE INSTALLED WITHIN 3 FEET OF HOLD OPEN DEVICE(S).

KEY PLAN:

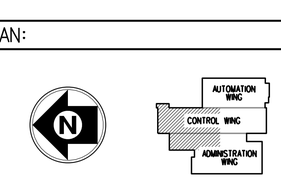

REV	APPROVED DATE	DESCRIPTION	JCN	REDLINE DATE	APVD

DEPARTMENT OF TRANSPORTATION
FEDERAL AVIATION ADMINISTRATION
ATO - TECHNICAL OPERATIONS WESTERN SERVICE AREA

ARTCC

MAJOR MECHANICAL MODERNIZATION
BASEMENT ROOM B88/B120/B129
FIRE ALARM PLAN

DENVER LONGMONT CO

REVIEWED BY

SUBMITTED BY: PAUL TULENKO — PROJECT ENGINEER

APPROVED BY: CALLEN R. COLLINS — MGR: ENGINEERING - SEATTLE

DO NOT SIGN

DESIGNED KC
DRAWN JA
CHECKED

ISSUED BY: ENGINEERING SERVICES ENROUTE/FSS

DATE
JCN 1401893
DRAWING NO ZDV-1401893-F411
REV

ISSUED FOR:

zdv-1401893-f411.dgn 6/27/2018 2:43:28 PM John CTR Allen

EDM: zdv-1401893-f411.dgn

DRAWING PRODUCED ON WSA MICROSTATION SYSTEM

B8 / F412 BASEMENT ROOM B119/B120A/B134 FIRE ALARM PLAN

SCALE: 1/8" = 1'-0"

GENERAL SHEET NOTES:

A. FOR GENERAL FIRE ALARM NOTES, LEGEND AND ABBREVIATIONS, REFER TO DRAWING Y001.

B. MODIFY SYSTEM AS NECESSARY TO COORDINATE WITH ANY ARCHITECTURAL, MECHANICAL OR ELECTRICAL CHANGES IN THE AREA.

C. UNDERFLOOR AND ABOVE CEILING DEVICES NOT SHOWN.

SHEET NOTES:

1. FIRE ALARM CONTRACTOR TO DEMOLISH WALL MOUNTED DEVICES AND PROTECT CEILING MOUNTED SMOKE DETECTORS FROM DEMOLITION WORK IN B120A AREA OF WORK AS IDENTIFIED ON DRAWINGS A112 AND A112 PRIOR TO NEW WORK.
2. FIRE ALARM CONTRACTOR TO REMOVE AND REUSE CEILING MOUNTED DEVICES IN THIS AREA. COORDINATE WITH DRAWINGS A132 AND A212.
3. PROVIDE NEW AID FOR EACH MECHANICAL AHU BEING REPLACED. MOUNT ON WALL IN ACCESSIBLE LOCATION. FIRE ALARM CONTRACTOR TO WIRE NEW INTEGRAL AHU DUCT DETECTOR(S) TO AID. FIRE ALARM CONTRACTOR TO REMOVE EXISTING INTEGRAL AHU DUCT DETECTORS AND MONITOR MODULES.
4. FIRE ALARM CONTRACTOR TO REMOVE AND REUSE WALL MOUNTED DEVICES IN THIS AREA AS REQUIRED FOR SELECTIVE DEMOLITION OF THE RED AND ORANGE ACOUSTICAL WALL PANELS AND METAL LOUVERS. COORDINATE WITH DRAWINGS A112 AND A212.

KEY PLAN:

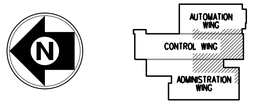

REV	APPROVED DATE	DESCRIPTION	JCN	REDLINE DATE	APVD

DEPARTMENT OF TRANSPORTATION
FEDERAL AVIATION ADMINISTRATION
ATO - TECHNICAL OPERATIONS WESTERN SERVICE AREA

ARTCC

MAJOR MECHANICAL MODERNIZATION
BASEMENT ROOM B119/B120A/B134
FIRE ALARM PLAN

DENVER LONGMONT CO

REVIEWED BY

SUBMITTED BY: PAUL TULENKO — PROJECT ENGINEER

APPROVED BY: CALLEN R. COLLINS — MGR: ENGINEERING - SEATTLE

DESIGNED KC
DRAWN JA
CHECKED

ISSUED BY: ENGINEERING SERVICES ENROUTE/FSS

DATE
JCN 1401893
DRAWING NO ZDV-1401893-F412
REV

ISSUED FOR:

DRAWING PRODUCED ON WSA MICROSTATION SYSTEM

EDM: zdv-1401893-f412.dgn

rsh-1401893-f412.dgn 6/27/2018 2:44:05 PM John CTR Allen

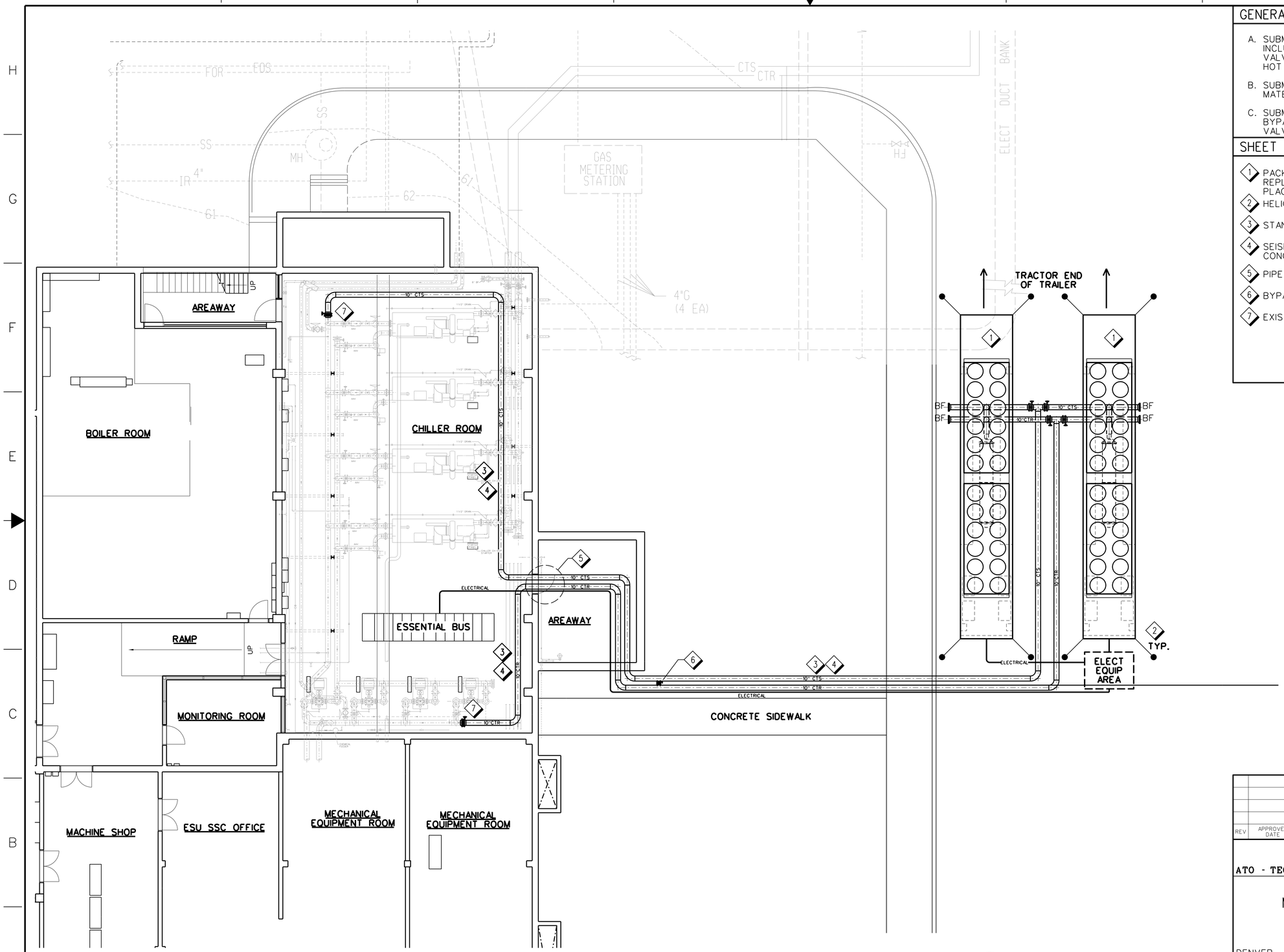

GENERAL NOTES:

A. SUBMIT DETAILED CUTOVER PLAN TO TEMPORARY COOLING INCLUDING TESTING AND OPERATION OF CRITICAL ISOLATION VALVES, INSTALLATION OF LINE STOPS, AND INSTALLATION OF HOT TAPS.

B. SUBMIT FOR APPROVAL PRODUCT DATA ON ALL EQUIPMENT AND MATERIAL USED FOR TEMPORARY COOLING AND CUTOVER.

C. SUBMIT FOR APPROVAL SHOP DRAWINGS DETAILING PIPE INGRESS, BYPASS LOOPS WITH BALL VALVES, LINE STOPS, AND ISOLATION VALVES.

SHEET NOTES:

1. PACKAGED AIR-COOLED CHILLERS WITH INTEGRAL PUMPS. REPLACEMENT CHILLER, IF NEEDED MUST BE DELIVERED AND PLACED INTO SERVICE WITHIN 24 HOURS.
2. HELICAL ANCHORS. SEE DETAIL F7 ON SHEET Z111.
3. STANDARD WEIGHT GROOVED PIPE AND FITTINGS.
4. SEISMICALLY ANCHOR TO PAVING, SIDEWALK, AREAWAY, AND CONCRETE FLOOR. SEE DETAIL A7 ON SHEET Z111.
5. PIPE INGRESS THROUGH AREAWAY AND EXISTING DOOR.
6. BYPASS LOOP.
7. EXISTING BLIND FLANGE VALVES.

REV	APPROVED DATE	DESCRIPTION	JCN	REDLINE DATE	APVD

DEPARTMENT OF TRANSPORTATION
FEDERAL AVIATION ADMINISTRATION
ATO - TECHNICAL OPERATIONS — WESTERN SERVICE AREA

ARTCC

MAJOR MECHANICAL MODERNIZATION TEMPORARY CHILLERS SITE PLAN

DENVER — LONGMONT — CO

REVIEWED BY

SUBMITTED BY: PAUL TULENKO — PROJECT ENGINEER

APPROVED BY: CALLEN R. COLLINS — MGR: ENGINEERING - SEATTLE

DO NOT SIGN

DESIGNED: TU
DRAWN: JA
CHECKED:

ISSUED BY: ENGINEERING SERVICES ENROUTE/FSS

DATE:
JCN: 1401893
DRAWING NO: ZDV-1401893-Z101
REV:

8' 0 8' 16'
SCALE: 1/8" = 1'-0"

ISSUED FOR:

DRAWING PRODUCED ON WSA MICROSTATION SYSTEM

zdv-1401893-z101.dgn 6/27/2018 3:39:12 PM John.CTR.Allen

EDM: zdv-1401893-z101.dgn

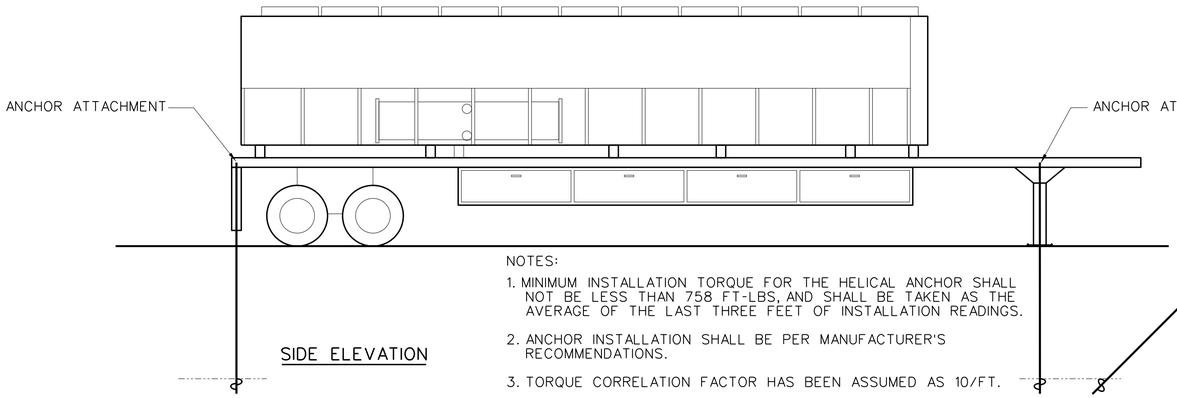

SIDE ELEVATION

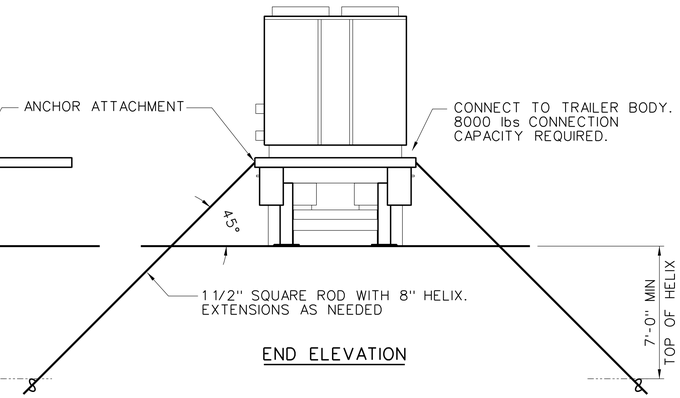

END ELEVATION

NOTES:

1. MINIMUM INSTALLATION TORQUE FOR THE HELICAL ANCHOR SHALL NOT BE LESS THAN 758 FT-LBS, AND SHALL BE TAKEN AS THE AVERAGE OF THE LAST THREE FEET OF INSTALLATION READINGS.
2. ANCHOR INSTALLATION SHALL BE PER MANUFACTURER'S RECOMMENDATIONS.
3. TORQUE CORRELATION FACTOR HAS BEEN ASSUMED AS 10/FT.
4. DESIGN ANCHOR TENSILE FORCE IS 7584 lbs PER ANCHOR.
5. HORIZONTAL SEISMIC DESIGN FORCE IS 17530 lbs WHEN USING A COMBINED CHILLER AND TRAILER WEIGHT OF 40860 lbs.

F7 / Z111 TEMPORARY CHILLER SEISMIC BRACING
SCALE: 1/4" = 1'-0"

GENERAL NOTES:

A. ALL PIPE HOLD DOWNS (LATERAL RESTRAINT) MAX 10'-0" SPACING. PIPE TECHNOLOGY & PRODUCTS HD-2 OR EQUAL.

SHEET NOTES:

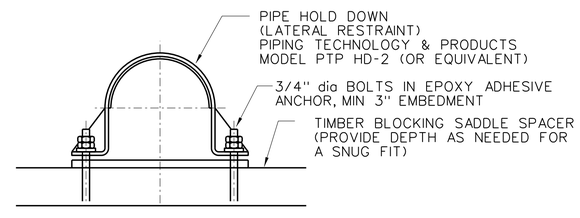

1 / Z111 HOLD DOWN DETAIL
SCALE: 1 1/2" = 1'-0"

REV	APPROVED DATE	DESCRIPTION	JCN	REDLINE DATE	APVD

DEPARTMENT OF TRANSPORTATION
FEDERAL AVIATION ADMINISTRATION
ATO - TECHNICAL OPERATIONS WESTERN SERVICE AREA

ARTCC

MAJOR MECHANICAL MODERNIZATION
TEMPORARY CHILLERS
TEMPORARY PIPE RESTRAINT DETAILS

DENVER LONGMONT CO

REVIEWED BY

SUBMITTED BY: PAUL TULENKO — PROJECT ENGINEER
APPROVED BY: CALLEN R. COLLINS — MGR: ENGINEERING - SEATTLE

DO NOT SIGN

DESIGNED TU
DRAWN JA
CHECKED

ISSUED BY: ENGINEERING SERVICES ENROUTE/FSS

DATE
JCN 1401893
DRAWING NO ZDV-1401893-Z111
REV

ISSUED FOR:

DRAWING PRODUCED ON WSA MICROSTATION SYSTEM

zdv-1401893-z111.dgn 6/27/2018 - 3:50:43 PM John CTR Allen

EDM: zdv-1401893-z111.dgn

SHEET NOTES:

1. CRITICAL ISOLATION VALVES.
2. TEMPORARY PIPING.

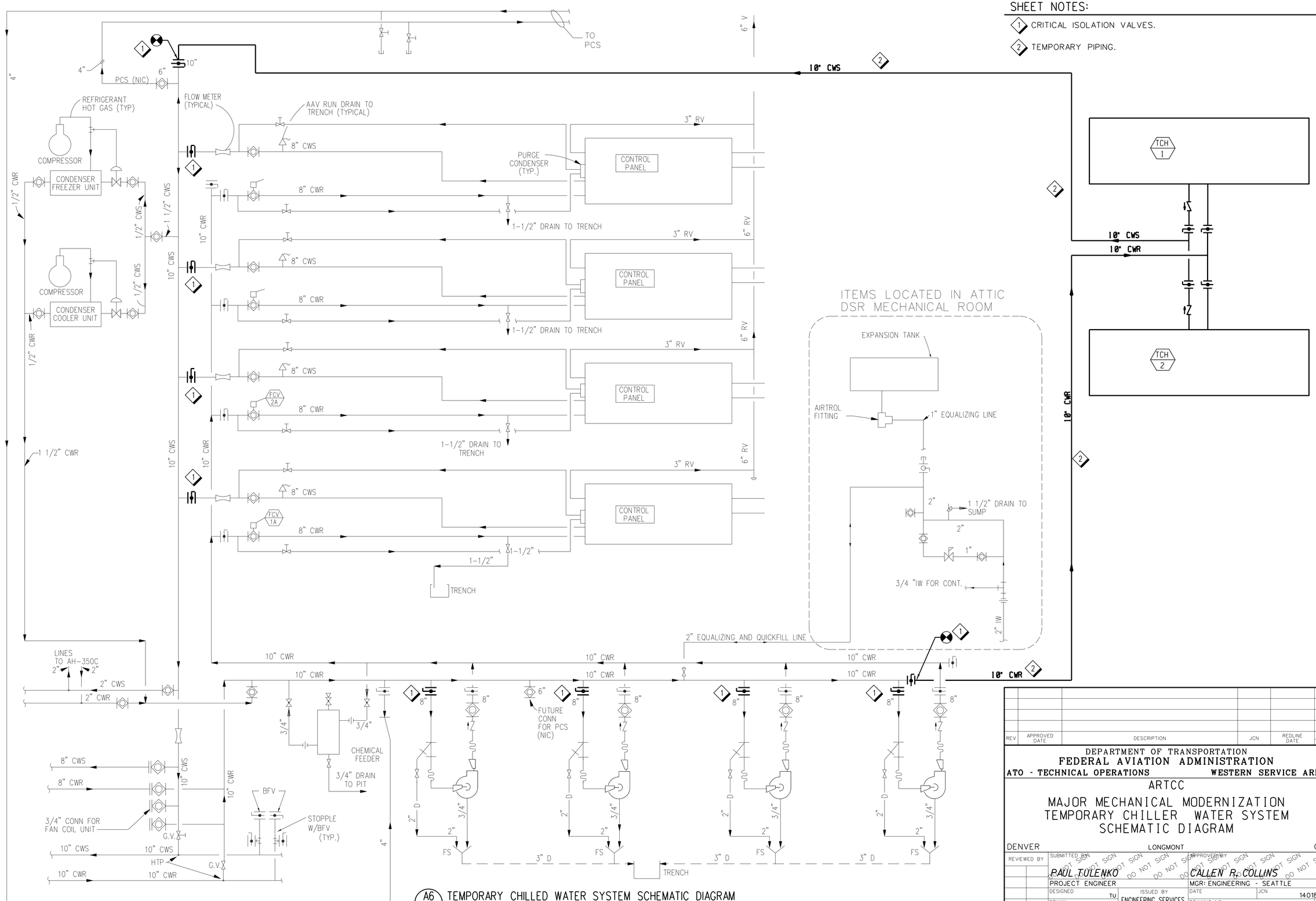

A6 / Z121 TEMPORARY CHILLED WATER SYSTEM SCHEMATIC DIAGRAM
SCALE: NTS

REV	APPROVED DATE	DESCRIPTION	JCN	REDLINE DATE	APVD

DEPARTMENT OF TRANSPORTATION
FEDERAL AVIATION ADMINISTRATION
ATO - TECHNICAL OPERATIONS — WESTERN SERVICE AREA

ARTCC

MAJOR MECHANICAL MODERNIZATION TEMPORARY CHILLER WATER SYSTEM SCHEMATIC DIAGRAM

DENVER — LONGMONT — CO

REVIEWED BY — SUBMITTED BY: PAUL TULENKO — APPROVED BY: CALLEN R. COLLINS

PROJECT ENGINEER — MGR: ENGINEERING - SEATTLE

DESIGNED: TU — ISSUED BY: ENGINEERING SERVICES ENROUTE/FSS — DATE — JCN: 1401893

DRAWN: JA — DRAWING NO: ZDV-1401893-Z121 — REV

CHECKED

ISSUED FOR:

DRAWING PRODUCED ON WSA MICROSTATION SYSTEM

DO NOT SIGN

zdv-1401893-z121.dgn 6/27/2018 3:53:18 PM John CTR Allen
EDM: zdv-1401893-z121.dgn

TEMPORARY CHILLER SCHEDULE

UNIT NUMBER	LOCATION	SERVICE	EQUIPMENT TYPE	REFRIGERANT	NOMINAL CAPACITY (TONS)	CHARGE (LBS)	EVAPORATOR DATA					ELECTRICAL REQUIREMENTS						DIMENSIONS (FT)			MAXIMUM WEIGHT (LBS.) CHILLER AND TRAILER	KNOWN ACCEPTABLE SOURCE		COMMENTS
							EWT (0F)	LWT (0F)	FLOW (GPM)	WPD (FT)	AMBIENT OPERATING CONDITIONS (0F)	FLA	MCA	MOP	VOLT	PH	HZ	LENGTH	WIDTH	HEIGHT		MFGR	MODEL/ SERIES	
TCH-1	OUTDOORS	CAMPUS	AIR COOLED CHILLER	R-134a	400	830	55	45.0	790.0	11.9	25-125	372/432*	423/474*	500/600*	460	3	60	48	8.5	12.6	43,460	TRANE	RTAC400	NOTE 1
TCH-2	OUTDOORS	CAMPUS	AIR COOLED CHILLER	R-134a	400	830	55	45.0	790.0	11.9	25-125	372/432*	423/474*	500/600*	460	3	60	48	8.5	12.6	43,460	TRANE	RTAC400	NOTE 1

NOTES:

NOTE 1: TWO CHILLERS WILL NEED TO BE FULLY POWERED AND PLUMBED TO THE BUILDING, AND 1 CHILLER WITH THE SAME PIPING CONFIGURATION AND SPECS WILL NEED TO BE ON STANDBY AT A RENTAL YARD, AND ABLE TO BE HOOKED UP AND RUNNING NO LONGER THAN 24 HOURS FOLLOWING THE EVENT OF EITHER OF THE TWO CHILLERS ONSITE FAILING.

* DUAL POINT CONNECTION

REV	APPROVED DATE	DESCRIPTION	JCN	REDLINE DATE	APVD

DEPARTMENT OF TRANSPORTATION
FEDERAL AVIATION ADMINISTRATION
ATO - TECHNICAL OPERATIONS WESTERN SERVICE AREA

ARTCC

MAJOR MECHANICAL MODERNIZATION
TEMPORARY CHILLERS
SCHEDULES

DENVER LONGMONT CO

REVIEWED BY

SUBMITTED BY: PAUL TULENKO
PROJECT ENGINEER

APPROVED BY: CALLEN R. COLLINS
MGR: ENGINEERING - SEATTLE

DO NOT SIGN

DESIGNED TU
DRAWN JA
CHECKED

ISSUED BY
ENGINEERING SERVICES
ENROUTE/FSS

DATE
JCN 1401893
DRAWING NO ZDV-1401893-Z131
REV

ISSUED FOR:

DRAWING PRODUCED ON WSA MICROSTATION SYSTEM

EDM: zdv-1401893-z131.dgn

rdn:1401893-z131.dgn
6/27/2018 3:52:54 PM John CTR Allen

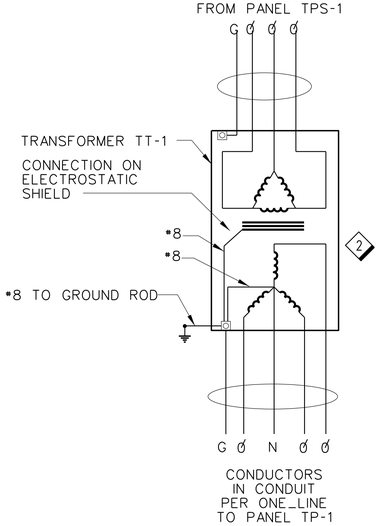

TRANSFORMER TT-1
CONNECTION DETAIL

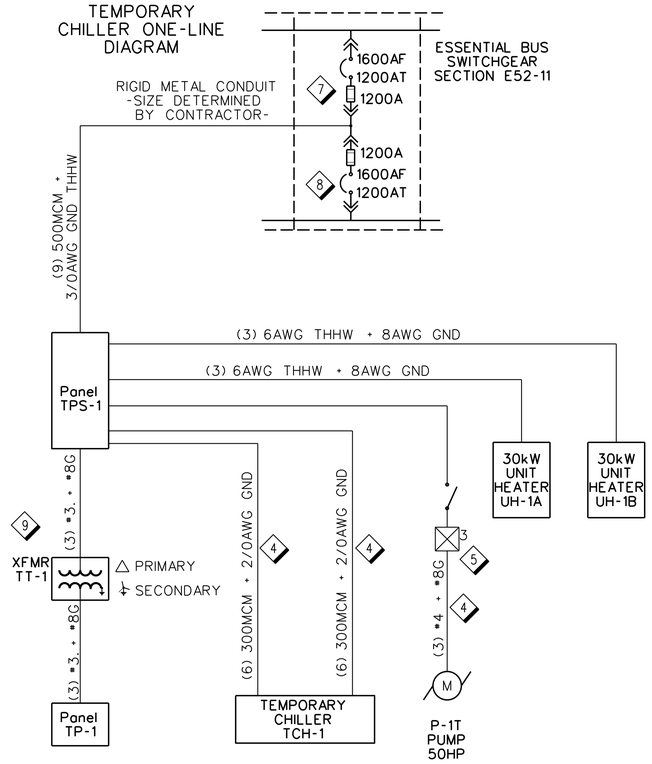

TEMPORARY PANEL SCHEDULES

Panel No. TPS-1 — Bus ESSENTIAL — Feed E-Bus Section xxxx
Service Voltage 460/480 Volts — Bus Rating 1600 Amps — Location Temporary Pwr Station
3 Phase — 3 Wire — AC Rating 42,000 Amps — Mounting

CKT No.	LOAD	kVA	CKT BKR Amps	CKT BKR Poles	kVA A	kVA B	kVA C	CKT BKR Poles	CKT BKR Amps	kVA	LOAD	CKT No.
-1	TEMPORARY CHILLER TCH-1 CIRCUIT 1	344	600	3	647			3	600	344	TEMPORARY CHILLER TCH-1 CIRCUIT 2	2-
-3		344				647				344		4-
-5		344					647			344		6-
-7	CHILLED WATER PUMP P-1T (SPARE)	12	150	3	17			3	30	5	TEMPORARY XFMR TT-1 (PANEL TP-1)	8-
-9		12				17				5		10-
-11		12					17			5		12-
-13	UNIT HEATER UH-1A	10	40	3	20			3	40	10	UNIT HEATER UH-1B	14-
-15		10				20				10		16-
-17		10					20			10		18-
-19	BLANK			3				3			BLANK	20-
-21												22-
-23												24-
-25	BLANK			3				3			BLANK	26-
-27												28-
-29												30-

Panel No. TP-1 — Bus ESSENTIAL — Feed TPS-1 (XFMR TT-1)
Service Voltage 208/120 Volts — Bus Rating 100 Amps — Location Temporary Pwr Station
3 Phase — 4 Wire — AC Rating 23,000 Amps — Mounting

LOAD	Pole	AMPS	AMPS	Pole	LOAD
SPARE	-1	20	20	2-	TCH-1 CONTROLS
P-1T CONTROLS (PUMP)	-3	20	20	4-	SPARE
TEMPORARY RECEPTACLES	-5	20	20	6-	SPARE
SPARE	-7	20	20	8-	TEMP LIGHTING
SPARE	-9	20	20	10-	TEMP LIGHTING
WATER LINE HEAT TRACE	-11	20	20	12-	SPARE
WATER LINE HEAT TRACE	-13	20		14-	BLANK
WATER LINE HEAT TRACE	-15	20		16-	BLANK
WATER LINE HEAT TRACE	-17	20		18-	BLANK

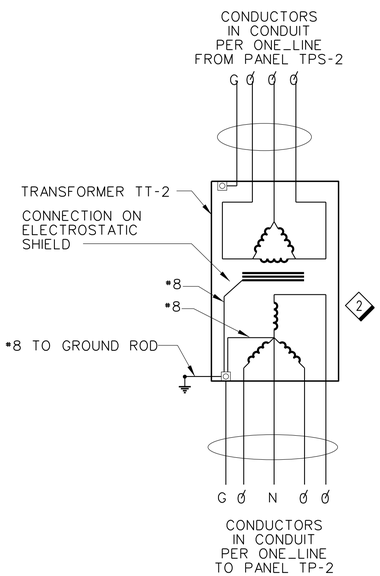

TRANSFORMER TT-2
CONNECTION DETAIL

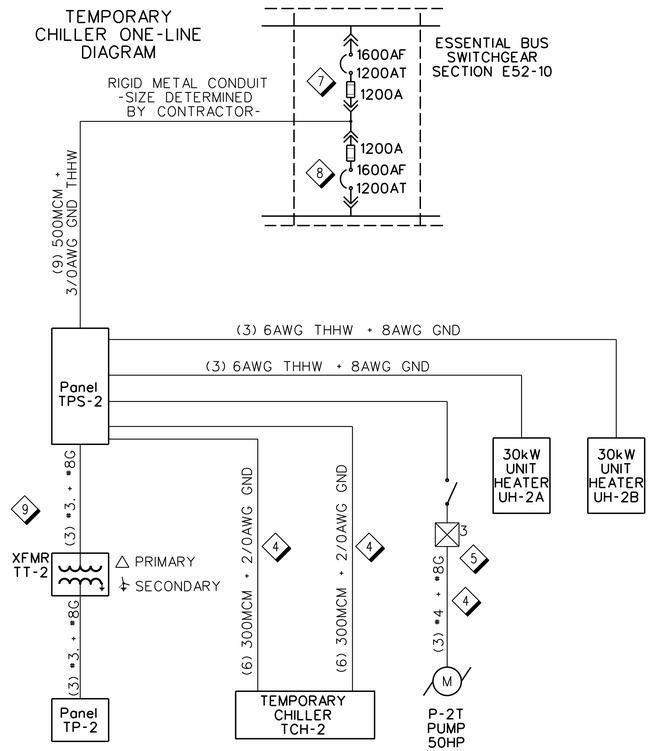

TEMPORARY PANEL SCHEDULES

Panel No. TPS-2 — Bus ESSENTIAL — Feed E-Bus Section xxxx
Service Voltage 460/480 Volts — Bus Rating 1600 Amps — Location Temporary Pwr Station
3 Phase — 3 Wire — AC Rating 42,000 Amps — Mounting

CKT No.	LOAD	kVA	CKT BKR Amps	CKT BKR Poles	kVA A	kVA B	kVA C	CKT BKR Poles	CKT BKR Amps	kVA	LOAD	CKT No.
-1	TEMPORARY CHILLER TCH-2 CIRCUIT 1	344	600	3	647			3	600	344	TEMPORARY CHILLER TCH-2 CIRCUIT 2	2-
-3		344				647				344		4-
-5		344					647			344		6-
-7	CHILLED WATER PUMP P-2T (SPARE)	12	150	3	17			3	30	5	TEMPORARY XFMR TT-2 (PANEL TP-2)	8-
-9		12				17				5		10-
-11		12					17			5		12-
-13	UNIT HEATER UH-2A	10	40	3	20			3	40	10	UNIT HEATER UH-2B	14-
-15		10				20				10		16-
-17		10					20			10		18-
-19	BLANK			3				3			BLANK	20-
-21												22-
-23												24-
-25	BLANK			3				3			BLANK	26-
-27												28-
-29												30-

Panel No. TP-2 — Bus ESSENTIAL — Feed TPS-2 (XFMR TT-2)
Service Voltage 208/120 Volts — Bus Rating 100 Amps — Location Temporary Pwr Station
3 Phase — 4 Wire — AC Rating 23,000 Amps — Mounting

LOAD	Pole	AMPS	AMPS	Pole	LOAD
SPARE	-1	20	20	2-	TCH-2 CONTROLS
P-2T CONTROLS (PUMP)	-3	20	20	4-	SPARE
TEMPORARY RECEPTACLES	-5	20	20	6-	SPARE
SPARE	-7	20	20	8-	TEMP LIGHTING
SPARE	-9	20	20	10-	TEMP LIGHTING
WATER LINE HEAT TRACE	-11	20	20	12-	SPARE
WATER LINE HEAT TRACE	-13	20		14-	BLANK
WATER LINE HEAT TRACE	-15	20		16-	BLANK
WATER LINE HEAT TRACE	-17	20		18-	BLANK

GENERAL NOTES

A. ALL EXTERIOR CONDUIT AND FITTINGS SHALL BE RIGID GALVANIZED STEEL.

B. ALL BELOW GRADE CONNECTIONS TO GROUND SHALL BE BY IRREVERSABLE MECHANICAL ROCESS, UL 467 LISTED.

C. ALL NEW 20A, 1-PHASE CIRCUITS SHALL BE 920 #12 w/#12 GND.

D. APPLY 2014 NEC, FAA-STD-19f, AND FAA-STD-1217G.

SHEET NOTES

1. PROVIDE TEMPORARY SQUARE-D I-LINE OR EQUIVALENT TPS-1 AND TPS-2 IN NEMA-4X ENCLOSURE.
2. PROVIDE TEMPORARY RESIN ENCAPSULATED 15kVA TRANSFORMER TT-1 AND TT-2.
3. PROVIDE TEMPORARY PANELBOARD TP-1 AND TP-2 IN NEMA 4X ENCLOSURE.
4. PROVIDER OF TEMPORARY CHILLERS TO SUPPLY BRANCH CIRCUIT CONDUCTORS FROM I-LINE TO TEMPORARY CHILLER UNITS.
5. PROVIDE NEMA TYPE 3 COMBINATION STARTER IN NEMA-4X ENCLOSURE.
6. PROVIDE (3) QUADRUPLEX GFCI RECEPTACLES WITH WEATHERPROOF-WHILE-IN-USE COVERS.
7. COORDINATE WITH COR TO INSTALL 1200A FUSE.
8. COORDINATE WITH COR TO ADJUST TRIP RATING TO 1200A AND DETERMINE PARAMETERS TO SET THE BPU TO, OBTAINED FROM THE PSG.
9. CONTRACTOR REQUIRED TO GROUND AND BOND ALL TEMPORARY EQUIPMENT AND PIPING ACCORDING TO FAA ORDER FAA-STD-19f:
   - PROVIDE 3#4" DIA. X 10' LONG COPPER CLAD GROUND ROD A MINIMUM OF 18" BELOW GRADE.
   - PROVIDE #8 BARE COPPER GROUND. CONNECT GROUND TO STRUCTURE USING COMPRESSION CRIMP LUG AND STAINLESS STEEL HARDWARE.
   - PROVIDE 4/0 BARE COPPER GROUNDING ELECTRODE,(COUNTERPOISE), IN 1" SCHEDULE 40 PVC COATED CONDUIT. SECURE CONDUIT TO PAVEMENT AT 5' INTERVALS. CONNECT COUNTERPOISE TO FENCING USING PIPE GROUNDING CLAMP.

REV	APPROVED DATE	DESCRIPTION	JCN	REDLINE DATE	APVD

DEPARTMENT OF TRANSPORTATION
FEDERAL AVIATION ADMINISTRATION
ATO - TECHNICAL OPERATIONS — WESTERN SERVICE AREA

ARTCC
MAJOR MECHANICAL MODERNIZATION
TEMPORARY CHILLERS
POWER SCHEDULES

DENVER — LONGMONT — CO

REVIEWED BY — SUBMITTED BY: PAUL TULENKO — APPROVED BY: CALLEN R. COLLINS
PROJECT ENGINEER — MGR: ENGINEERING - SEATTLE
DESIGNED TL — ISSUED BY: ENGINEERING SERVICES ENROUTE/FSS — DATE — JCN 1401893
DRAWN JA — DRAWING NO ZDV-1401893-Z141 — REV
CHECKED

ISSUED FOR:

DO NOT SIGN

zdv-1401893-z141.dgn 6/27/2018 3:53:35 PM John CTR Allen
EDM: zdv-1401893-z141.dgn
DRAWING PRODUCED ON WSA MICROSTATION SYSTEM

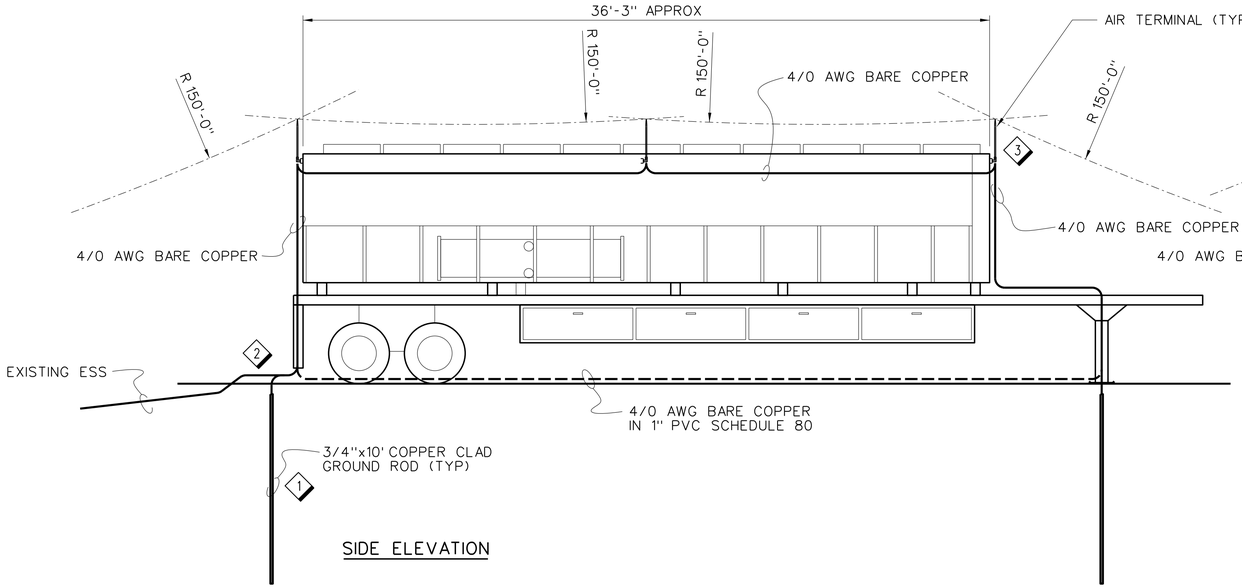

SIDE ELEVATION

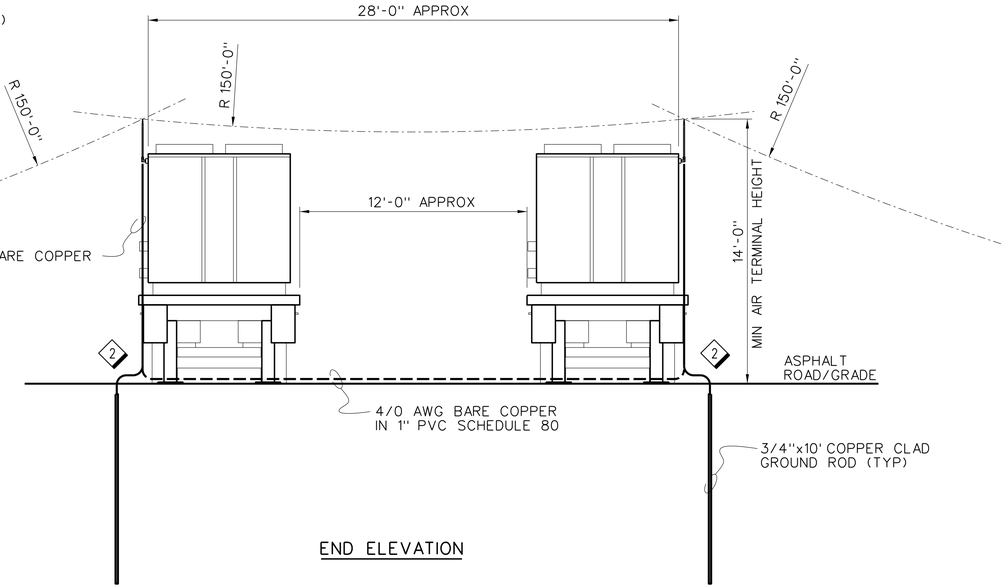

END ELEVATION

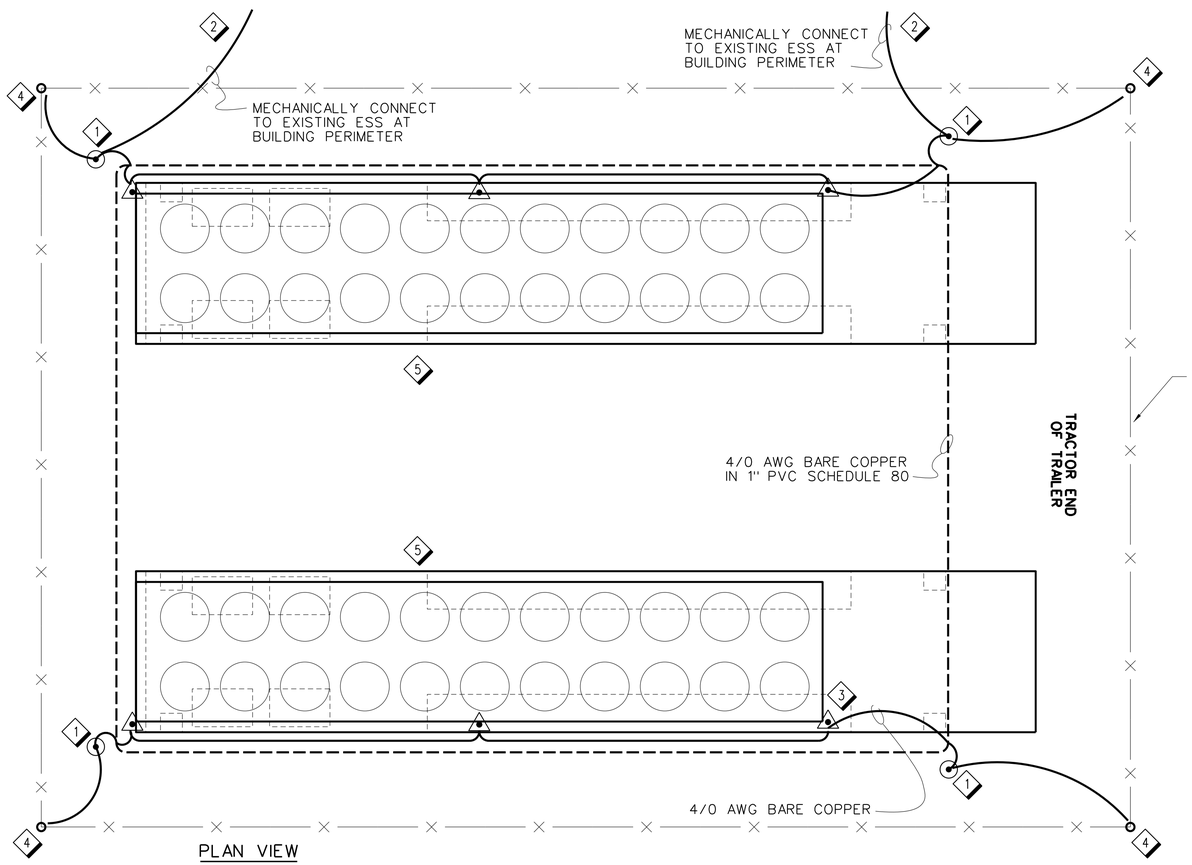

PLAN VIEW

4' 0 4' 8'
SCALE: 1/4" = 1'-0"

SHEET NOTES:

1. PROVIDE/INSTALL FOUR 3/4"x10' COPPER CLAD GROUNDING RODS AS SHOWN ON PLAN. THE GROUND RODS SHALL BE DRIVEN 1 INCH BELOW GRADE FOR TEMPORARY TRAILERS.
2. TEMPORARY CHILLER TRAILERS SHALL BE BONDED TO A GROUND ROD WITH A BARE 4/0 AWG CONDUCTOR USING EXOTHERMICAL WELD.
3. PROVIDE/INSTALL AIR TERMINALS AS SHOWN ON PLAN. AIR TERMINALS SHALL BE 24" IN HEIGHT. AIR TERMINALS SHALL BE SECURED PER NFPA 780.
4. BOND CORNER FENCE POST TO GROUND ROD AS SHOWN ON PLAN. ALL CONNECTIONS TO BE EXOTHERMICALLY WELDED.
5. CONTRACTOR SHALL PROVIDE/INSTALL EXTERIOR LIGHTING FOR TEMPORARY CHILLER TRAILERS. CONTRACTOR SHALL COORDINATE THE TEMPORARY LIGHTING PLAN TO MEET FOOTCANDLE REQUIREMENT PER OSHA.

REV	APPROVED DATE	DESCRIPTION	JCN	REDLINE DATE	APVD

DEPARTMENT OF TRANSPORTATION
FEDERAL AVIATION ADMINISTRATION
ATO - TECHNICAL OPERATIONS **WESTERN SERVICE AREA**

ARTCC

MAJOR MECHANICAL MODERNIZATION
TEMPORARY CHILLERS
LIGHTNING PROTECTION DETAILS

DENVER LONGMONT CO

REVIEWED BY

SUBMITTED BY: JON W. ORR (DO NOT SIGN)
PROJECT ENGINEER

APPROVED BY: CALLEN R. COLLINS (DO NOT SIGN)
MGR: ENGINEERING - SEATTLE

DESIGNED TL
DRAWN JA
CHECKED

ISSUED BY: ENGINEERING SERVICES ENROUTE/FSS

DATE
JCN 1401893
DRAWING NO ZDV-1401893-Z142
REV

ISSUED FOR: CONSTRUCTION

rfb-1401893-142.dgn 7/3/2018 9:20:52 AM John CTR Allen

EDM: zdv-1401893-z142.dgn

DRAWING PRODUCED ON WSA MICROSTATION SYSTEM