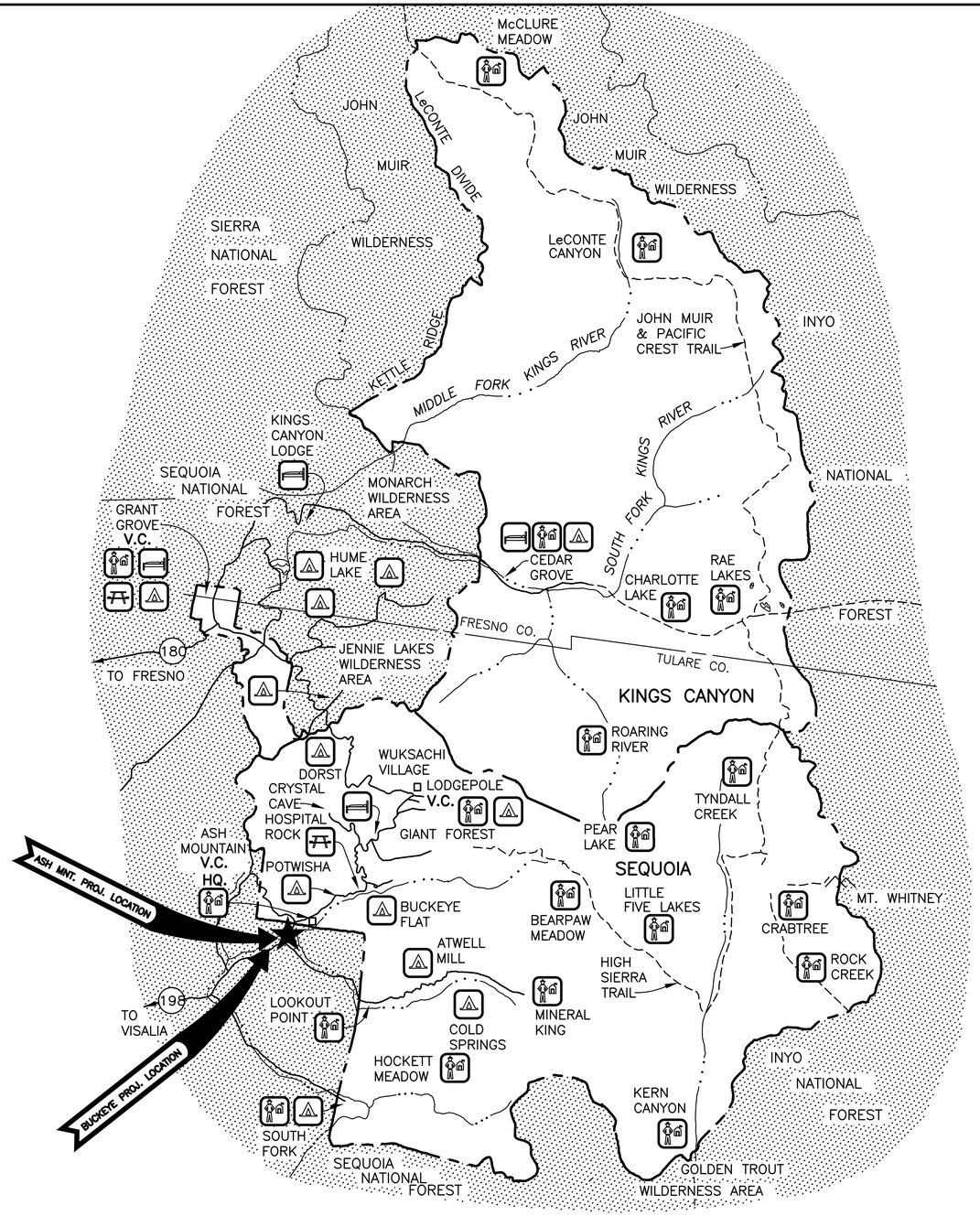

SEQUOIA–KINGS CANYON
NATIONAL MONUMENT OR PARK

LEGEND

- PARK BOUNDARY
- COUNTY LINE
- PAVED ROAD
- UNPAVED ROAD
- TRAIL
- RIVER OR CREEK
- V.C. VISITOR CENTER
- HQ. PARK HEADQUARTERS
- RANGER STATION
- INFORMATION CENTER
- PICNIC AREA
- CAMPGROUND

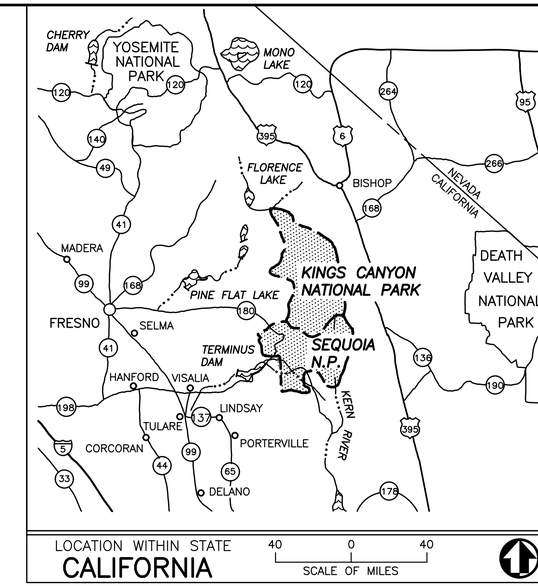

REGISTERED PROFESSIONAL ENGINEER
DAVID BARTON BROOKE
NO. 70417
CIVIL
STATE OF CALIFORNIA
100% DRAFT

SCALE OF FEET
2,000 0 2,000 4,000
500 0 500 1,000
SCALE OF METERS

PMIS #317446

CONSTRUCTION DOCUMENTS UNITED STATES DEPARTMENT OF THE INTERIOR NATIONAL PARK SERVICE DENVER SERVICE CENTER	TITLE OF PROJECT REHABILITATE WASTEWATER SYSTEMS LOCATION WITHIN PARK ASH MOUNTAIN, BUCKEYE HOUSING NAME OF PARK SEQUOIA & KINGS NATIONAL PARKS REGION: PACIFIC WEST · COUNTY: TULARE · STATE: CALIFORNIA	DRAWING NO. 102 / 177,507 PKG. NO. SHEET 1 OF 135	

BASIC DATA: BASICDATA

11/10/2021 12:42 BART BROOKE G:\CLIENTS\NPS\SEKI\317446\DRAWINGS\ASH MOUNTAIN DWGS\1_ASH MOUNTAIN WWTP\1 COVER SHEET.DWG

Sheet List Table

Sheet Title	Sheet Number	Sheet subset number:
ASH MOUNTAIN WWTP		
COVER SHEET	1	--
SHEET INDEX	2	G1.0
BID OPTIONS INDEX CONSTRUCTION SCHED	3	G1.1
CIVIL GENERAL NOTES	4	G1.2
SYMBOLS LEGEND	5	G1.3
ABBREVIATIONS	6	G1.4
PROJECT SITE MAP AMWWTP & BHWWTP	7	G1.5
STAGING AREAS AMWWTP & BHWWTP	8	G1.6
PROJECT PHASING		
CONSTRUCTION PHASE 0 EXISTING	9	PH1.0
CONSTRUCTION PHASE 1 AMWWTP	10	PH1.1
CONSTRUCTION PHASE 2 AMWWTP	11	PH1.2
CONSTRUCTION PHASE 3 AMWWTP	12	PH1.3
CONSTRUCTION PHASE 4 AMWWTP	13	PH1.4
HYDRAULIC PROFILE		
HYDRAULIC PROFILE PHASE 1 AMWWTP	14	HP1.1
HYDRAULIC PROFILE PHASE 2 AMWWTP	15	HP1.2
HYDRAULIC PROFILE PHASE 3 AMWWTP	16	HP1.3
HYDRAULIC PROFILE PHASE 3 AMWWTP	17	HP1.4
CIVIL SHEETS		
DESIGN CRITERIA (AMWWTP)	18	DC1.1
DESIGN CRITERIA (AMWWTP)	19	DC1.2
DESIGN CRITERIA SPRAYFIELD (AMWWTP)	20	DC1.3
DESIGN CRITERIA SPRAYFIELD (ASH MTN.)	21	DC1.4
SITE SHEETS		
SURVEY CONTROL AMWWTP TREATMENT	22	C1.1
SURVEY CONTROL AMWWTP SPRAYFIELD	23	C1.2
GEOTECH BOREHOLES & TEST PITS AMWWTP	24	C1.3
TREATMENT SITE GRADING AMWWTP	25	C1.4
GRADING DETAILS	26	C1.5
PLAN & PROFILE – ACCESS ROAD		
PLAN & PROFILE ACCESS ROAD AMWWTP	27	C1.6
CROSS SECTIONS ACCESS ROAD AMWWTP	28	C1.7
TREATMENT & DISPOSAL AMWWTP		
SITE PLAN AMWWTP TREATMENT	29	C1.8
TREATMENT SITE SYSTEM PROFILE AMWWTP	30	C1.9
PLAN HEADWORKS & PRIMARY TREATMENT	31	C1.10
SECONDARY TREATMENT TANKS AMWWTP	32	C1.11
100 000 GALLON STORAGE TANK AMWWTP	33	C1.12
SPRAYFIELD PUMPHOUSE AMWWTP	34	C1.13
CONTROL PLAN SPRAYFIELD AMWWTP	35	C1.14
SPRAYFIELD BASE BID REHABILITATION AMWWTP	36	C1.15
SPRAYFIELD REHABILITATION AMWWTP	37	C1.16
GENERATOR & CONTROL BLDG AMWWTP	38	C1.17
DETAIL SHEETS AMWWTP		
GENERAL DETAILS AMWWTP	39	D1.1
GENERAL DETAILS AMWWTP	40	D1.2
HEADWORKS AMWWTP	41	D1.3
PRIMARY TREATMENT TANK AMWWTP	42	D1.4
PRIMARY TREATMENT TANK AMWWTP	43	D1.5
PRE–ANOXIC RETURN TANK AMWWTP	44	D1.6
RTF TREATMENT SYSTEM	45	D1.7
RTF TREATMENT SYSTEM	46	D1.8
RTF TREATMENT SYSTEM	47	D1.9
AMWWTP 100 000 GALLON STORAGE TANK	48	D1.10
SPRAYFIELD PUMP HOUSE AMWWTP	49	D1.11
SPRAYFIELD AMWWTP	50	D1.12
MISC DETAILS AMWWTP	51	D1.13
SITE DRAINAGE DETAILS AMWWTP	52	D1.14
PROPANE PIPING DETAILS AMWWTP	53	D1.15
MANHOLE DETAILS	54	D1.16
MANHOLE DETAILS	55	D1.17
MANHOLE DETAILS	56	D1.18
GENERAL DETAILS	57	D1.19
CHAIN LINKE FENCE	58	D1.20
BARBED WIRE FENCE	59	D1.21
ARCHITECTURAL SHEETS AMWWTP		
ARCHITECTURAL ABBREV. & LEGEND	60	A1.0
CONTROL BUILDING FLOOR PLAN	61	A1.1
CONTROL BUILDING EXTERIOR ELEVATIONS	62	A1.2
CONTROL BUILDING INTERIOR ELEVATIONS	63	A1.3
ROOF DETAILS AMWWTF	64	A1.4
ARCH DETAILS AMWWTF	65	A1.5
ARCH SCHEDULES AMWWTF	66	A1.6
STRUCTURAL SHEETS AMWWTP		
STRUCTURAL NOTES 1	67	S1.0
STRUCTURAL NOTES 2	68	S1.1
STRUCTURAL NOTES 3	69	S1.2
STRUCTURAL NOTES 4	70	S1.3
STANDARD DETAILS	71	S1.4
STANDARD DETAILS 2	72	S1.5
CONTROL BUILDING FOUNDATION PLAN	73	S1.6
CONTROL BUILDING WALL FRAMING	74	S1.7
CONTROL BUILDING ROOF FRAMING	75	S1.8
CONTROL BUILDING DETAILS – FOUNDATIONS	76	S1.9
CONTROL BUILDING DETAILS – WALLS	77	S1.10
CONTROL BUILDING DETAILS – ROOF	78	S1.11
HEADWORKS SHED FOUNDATION PLAN	79	S1.12
HEADWORKS SHED ROOF FRAMING	80	S1.13
HEADWORKS SHED FRMG ELEV	81	S1.14
HEADWORKS SHED DETAILS	82	S1.15
GENERATOR PAD	83	S1.16
PROPANE TANK PAD	84	S1.17
PRIMARY TREATMENT TANK	85	S1.18
STORAGE TANK	86	S1.19
PRE ANOXIC TANK	87	S1.20
ELECTRICAL SHEETS AMWWTP		
NOTES–DEFINITIONS LEGEND	88	E0.0
EXISTING ELECTRICAL SITE PLAN–A	89	E1.0
EXISTING ELECTRICAL SITE PLAN–B	90	E1.1
NEW ELECTRICAL SITE PLAN–A	91	E1.2
NEW ELECTRICAL SITE PLAN–B	92	E1.3
CONTROL BUILDING ELECTRICAL PLAN	93	E2.0
ASH MOUNTAIN WWTP ONE–LINE DIAGRAM	94	E3.0
ONE–LINE DIAGRAM FOR LIFT STATION	95	E3.1
ASH MTN WWTP SCHEDULES	96	E3.2
ASH MTN PUMP HOUSE PANEL SCHEDULE	97	E3.3
SPRAYFIELD PUMP HOUSE POWER	98	E4.0
SPRAYFIELD PUMP HOUSE LIGHTING	99	E4.1
CTRL BLDG DEMO DETAILS	100	E5.0
CONTROL SCHEME	101	E6.0
CONTROL PANEL DIAGRAM–A	102	E6.1
CONTROL PANEL DIAGRAM–B	103	E6.2
CIVIL SHEETS		
HYDRAULIC PROFILE PHASE 1 BHWWTP	104	HP2.1
DESIGN CRITERIA (BHWWTP)	105	DC2.1
DESIGN CRITERIA (BHWWTP)	106	DC2.2
PROJECT SITE PLAN	107	C2.1
SURVEY CONTROL TREATMENT BHWWTP	108	C2.2
SURVEY CONTROL SPRAYFIELD BHWWTP	109	C2.3
GEOTECH BOREHOLES & TEST PITS BHWWTP	110	C2.4
ABANDONED LAGOON GRADING BHWWTP	111	C2.5
LINED LAGOON GRADING BHWWTP	112	C2.6
TREATMENT & DISPOSAL BHWWTP		
BID OPTION SITE PAVING	113	C2.7
SITE TREATMENT	114	C2.8
SAND BED DISPOSAL	115	C2.9
SAND BED DISPOSAL PLAN & PROFILE	116	C2.10
DRAINFIELD TRENCH DETAIL	117	C2.11
DETAIL SHEETS BHWWTP		
GENERAL DETAILS BHWWTP	118	D2.1
SEPTIC TANK BHWWTP	119	D2.2
LIFT STATION PLAN BHWWTP	120	D2.3
LIFT STATION SECTION BHWWTP	121	D2.4
SAND BED DISPOSAL BHWWTP	122	D2.5
ARCHITECTURAL SHEETS BHWWTP		
CONTROL BUILDING FLOOR PLAN–BHWWTP	123	A2.1
CONTROL BUILDING EXT. ELEV.– BHWWTP	124	A2.2
STRUCTURAL SHEETS BHWWTP		
SEPTIC TANK– BHWWTP	125	S2.1
ELECTRICAL SHEETS BHWWTP		
EXISTING ELECTRICAL SITE PLAN	126	E7.0
CTRL BLDG ELEC DEMO	127	E8.0
CTRL BLDG POWER PLAN	128	E8.1
CTRL BLDG LIGHTING PLAN	129	E8.2
CONTROL SCHEME	130	E9.0
CONTROL PANEL DIAGRAM–A	131	E9.1
CONTROL PANEL DIAGRAM–B	132	E9.2
EXISTING ELECTRICAL SITE DETAILS	133	E10.0
BHWWTP ONE–LINE DIAGRAM	134	E11.0
BHWWTP SCHEDULES	135	E11.1

REGISTERED PROFESSIONAL ENGINEER
DAVID BARTON BROOKE
NO. 72417
CIVIL
STATE OF CALIFORNIA
100% DRAFT

DESIGNED: D. BROOKE CADD M. GARCIA TECH. REVIEW: J. BLOM DATE: 04/07/2022	SUB SHEET NO. G1.0	TITLE OF SHEET SHEET INDEX REHABILITATE ASH AND BUCKEYE WASTEWATER TREATMENT PLANTS SEQUOIA & KINGS CANYON NATIONAL PARKS	DRAWING NO. 102 / 177,507 PMIS/PKG NO. 317446 SHEET 2 OF 135

25/04/2022 16:22 MARIO GARCIA G:\CLIENTS\NPS\SEK\317446\DRAWINGS\ASH MOUNTAIN DWGS\1_ASH MOUNTAIN WWTP\2 – SHEET INDEX.DWG

BID OPTION SHEET INDEX

AMWWTF

SHEET TITLE	SHEET NUMBER	SHEET SUBSET NUMBER	BID OPTION DESCRIPTION	KEYNOTE	CLIN NUMBER
SITE PLAN AMWWTP TREATMENT	29	C1.8	AMWWTF AERATION TANK CONVERSION TO PRIMARY TREATMENT EQUALIZATION TANK	14	BO 1
BID OPTION PRIMARY TREATMENT TANK	43	D1.5	AMWWTF AERATION TANK CONVERSION TO PRIMARY TREATMENT EQUALIZATION TANK	ALL	BO 1
SPRAYFIELD PUMP AND BID OPTION WELL AMWWTP	37	C1.16	SPRAYFIELD BID OPTION REHABILITATION AMWWTF	ALL	BO 2
SITE PLAN AMWWTP TREATMENT	29	C1.8	REHABILITATE AMWWTF SERVICE ROAD	20	BO 3
SPRAYFIELD PUMP AND BID OPTION WELL AMWWTP	34	C1.3	AMWWTF SPRAYFIELD MONITORING WELLS	4	BO 4
BHWWTF					
SPRAYFIELD PUMP AND BID OPTION WELL AMWWTP	105	C2.7	BHWWTF REHABILITATE EXISTING HOUSING ROAD	2	BO 5
SPRAYFIELD PUMP AND BID OPTION WELL AMWWTP	109	C2.6	BHWWTF SPRAYFIELD MONITORING WELL	2	BO 6

ANTICIPATED CONSTRUCTION SCHEDULE

AMWWTF

LOCATION	PHASE SEQUENCE	BEGIN DATE	CONSTRUCTION DESCRIPTION	END DATE	DAYS
AMWWTF	1	OCTOBER 1, 2022	MOBILIZE (1 WEEK); INITIAL GRADING AND DECOMMISSION LAGOON (2 WEEKS); TANK CONSTRUCTION (9 WEEKS) = 12 WEEKS TOTAL	DECEMBER 23, 2022	84
AMWWTF	2	DECEMBER 24, 2022	GRADING & DRAINAGE IMPROVEMENTS (6 WEEKS); PREANOXIC TANK & GENERATOR / CONTROL BUILDING CONSTRUCTION (6 WEEKS); RTF UNITS INSTALLATION (6 WEEKS); SYSTEM CONTROLS PARTIAL COMMISSIONING (4 WEEKS) = 22 WEEKS TOTAL	MAY 28, 2023	154
AMWWTF	3A	MAY 29, 2023	HEADWORKS CONSTRUCTION (4 WEEKS); OVERHEAD CANOPY (2 WEEKS); NEW MANHOLES & PIPING (2 WEEKS) = 8 WEEKS TOTAL	JULY 23, 2023	56
AMWWTF	3B	JULY 23, 2023	CONVERT EXTENDED AERATION TANK TO PRIMARY EQUALIZATION TANK (8 WEEKS) = 8 WEEKS TOTAL	SEPTEMBER 15, 2023	56
AMWWTF	4	SEPTEMBER 15, 2023	PUMP HOUSE REHABILITATION (4 WEEKS); SPRAYFIELD REHABILITATION (4 WEEKS) = 8 WEEKS TOTAL	NOVEMBER 10, 2023	56
AMWWTF	FINAL	NOVEMBER 11, 2023	FINAL SYSTEM STARTUP COMMISSIONING & TRAINING (2 WEEKS); PUNCH–LIST COMPLETION (3 WEEKS); INSPECTION & CONTRACTOR CORRECTIONS (1 WEEK); DEMOBILIZATION (1 WEEK) = 7 WEEKS TOTAL	DECEMBER 29, 2023	51
				SUBTOTAL	**457**
ALLOWANCES	**PHASE SEQUENCE**	**EXTENDED BEGIN DATE**	**DESCRIPTION**	**EXTENDED END DATE**	
HOLIDAYS	ALL	DECEMBER 30, 2023	THANKSGIVING, CHRISTMAS, MLK DAY, PRESIDENT'S DAY, MEMORIAL DAY, FOURTH OF JULY, LABOR DAY, THANKSGIVING, CHRISTMAS (4 WEEKS) = 4 WEEKS TOTAL	JANUARY 26, 2024	28
ADVERSE WEATHER	ALL	JANUARY 27, 2024	WEATHER SHUTDOWNS (5 WEEKS) = 5 WEEKS TOTAL	MARCH 1, 2024	35
SUPPLY CHAIN ISSUES	ALL	MARCH 2, 2024	EXTENDED LEAD TIMES, DELAYS (4 WEEKS) = 4 WEEKS TOTAL	MARCH 29, 2024	28
				SUBTOTAL	**91**
MAXIMUM PROJECT DURATION				**TOTAL**	**548**

BHWWTF

LOCATION	PHASE SEQUENCE	BEGIN DATE	CONSTRUCTION DESCRIPTION	END DATE	DAYS
BHWWTF	1–2	DECEMBER 24, 2022	GRADING & DRAINAGE IMPROVEMENTS (4 WEEKS); SEPTIC TANK & BUILDING CONSTRUCTION (6 WEEKS); LIFT STATION & DOSING SIPHON CONSTRUCTION (6 WEEKS); SAND BED (6 WEEKS) = 22 WEEKS TOTAL	MAY 28, 2023	154
BHWWTF	3A	MAY 29, 2023	FINAL SYSTEM STARTUP COMMISSIONING & TRAINING (2 WEEKS); PUNCH–LIST COMPLETION (2 WEEKS); INSPECTION & CONTRACTOR CORRECTIONS (1 WEEK); DEMOBILIZATION (1 WEEK) = 6 WEEKS TOTAL	JULY 23, 2023	56
TOTAL WORK DAYS ANTICIPATED TO BE PERFORMED AT BHWWTF CAN BE COMPLETED WITHIN AMWWTF'S SCHEDULE				**SUBTOTAL**	**210**

REGISTERED PROFESSIONAL ENGINEER
DAVID BARTON BROOKE
NO. 70417
CIVIL
STATE OF CALIFORNIA
100% DRAFT

DESIGNED: D. BROOKE	SUB SHEET NO.	TITLE OF SHEET	DRAWING NO.
CADD M. GARCIA	G1.1	BID OPTIONS INDEX CONSTRUCTION SCHED	102 / 177,507
TECH. REVIEW: J. BLOM		REHABILITATE ASH AND BUCKEYE WASTEWATER TREATMENT PLANTS SEQUOIA & KINGS CANYON NATIONAL PARKS	PMIS/PKG NO. 317446
DATE: 04/07/2022			SHEET 3 OF 135

26/04/2022 15:55 MARIO GARCIA G:\CLIENTS\NPS\SEK\317446\DRAWINGS\ASH MOUNTAIN DWGS\1_ASH MOUNTAIN WWTP\3 – SHEET INDEX BID OPTIONS.DWG

GENERAL NOTES

1. ALL CONSTRUCTION SHALL BE IN CONFORMANCE WITH NPS STANDARDS AND STATE AND LOCAL STANDARDS.
2. SURVEY/ ELEVATIONS SHOWN ON THE PLANS ARE TO BE USED BY THE CONTRACTOR TO DETERMINE APPROXIMATE FIELD CONDITIONS. ACTUAL ELEVATIONS SHALL BE FIELD VERIFIED DURING CONSTRUCTION.
3. IN GENERAL, EXISTING STRUCTURES, EQUIPMENT, AND FACILITIES ARE SHOWN AS SCREENED BACKGROUND. NEW STRUCTURES, EQUIPMENT, AND FACILITIES ARE SHOWN IN HEAVY LINE WEIGHTS. OTHER DISCIPLINES MAY SCREEN NEW STRUCTURES TO SHOW THEIR INFORMATION.
4. ALL WORK SHALL BE PERFORMED PER THE APPROVED PLANS, PROJECT SPECIFICATIONS AND GENERAL CONDITIONS OF THE CONTRACT. ANY CHANGES TO THE DESIGN AS SHOWN IN THESE CONSTRUCTION DOCUMENTS MUST BE REVIEWED AND APPROVED BY THE CONTRACTING OFFICER BEFORE CHANGES ARE MADE.
5. BY ACCEPTING AND USING THESE DRAWINGS, CONTRACTOR AGREES THAT HE/SHE SHALL ASSUME SOLE AND COMPLETE RESPONSIBILITY FOR JOB SITE CONDITIONS DURING THE COURSE OF CONSTRUCTION OF THIS PROJECT, INCLUDING SAFETY OF ALL PERSONS AND PROPERTY; THIS REQUIREMENT SHALL APPLY CONTINUOUSLY AND NOT BE LIMITED TO NORMAL WORKING HOURS. IN ADDITION, THE CONTRACTOR SHALL DEFEND, INDEMNIFY AND HOLD THE NPS AND THE OWNER'S REPRESENTATIVE HARMLESS FROM ANY AND ALL LIABILITY, REAL OR ALLEGED, IN CONNECTION WITH THE PERFORMANCE OF WORK ON THIS PROJECT, EXCEPTING THE LIABILITY ARISING FROM THE SOLE NEGLIGENCE OF THE NPS OR THE OWNER'S REPRESENTATIVE.
6. ANY KNOWN SEWERS, WATER MAINS, TELEPHONE CONDUITS, ELECTRIC CABLES, AND OTHER UNDERGROUND/OVERHEAD ITEMS ARE SHOWN ON THE DRAWINGS ONLY TO THE EXTENT SUCH INFORMATION HAS BEEN MADE AVAILABLE OR DISCOVERED BY THE ENGINEER. IT IS EXPECTED THAT THERE MAY BE DISCREPANCIES AND OMISSIONS IN THE LOCATION AND QUANTITIES OF EXISTING UTILITIES AND STRUCTURES SHOWN. THIS INFORMATION IS SHOWN FOR THE CONVENIENCE OF THE CONTRACTOR BUT IS NOT GUARANTEED TO BE EITHER CORRECT OR COMPLETE AND ALL RESPONSIBILITY FOR THE ACCURACY AND COMPLETENESS THEREOF IS EXPRESSLY DISCLAIMED. THE CONTRACTOR IS RESPONSIBLE FOR FIELD LOCATING WATER, SEWER, ELECTRIC, PHONE AND ALL OTHER EXISTING UTILITIES IN THE PROJECT LIMITS VIA POTHOLING, 3RD PARTY UTILITY LOCATOR, ETC. AS NECESSARY TO VERIFY LOCATIONS, CORRECTNESS, & COMPLETENESS.
7. THE CONTRACTOR SHALL CONTACT DIG ALERT TO CREATE A CONTRACTOR TICKET FOR THE LOCATION OF EXISTING UTILITIES AT LEAST TWO WORKING DAYS PRIOR TO THE BEGINNING OF WORK. THE CONTRACTOR IS RESPONSIBLE FOR PROVIDING PRE–MARKING OF THE LOCATION LIMITS AS REQUIRED BY DIG ALERT. CONTRACTOR MAY NOT BEGIN EXCAVATION UNTIL ALL UTILITY MEMBERS HAVE RESPONDED TO THEIR TICKET.
8. DIMENSIONS SHOWN ON THE PLANS ARE TO BE USED BY THE CONTRACTOR TO DETERMINE APPROXIMATE FIELD CONDITIONS. PRIOR TO CONSTRUCTION CONTRACTOR SHALL FIELD VERIFY EXISTING LOCATIONS, ELEVATIONS, MATERIAL TYPES, I.D. AND O.D. OF PIPES, ETC. OF ALL UTILITIES AND FEATURES WHERE PROPOSED IMPROVEMENTS CONNECT. NOTIFY CONTRACTING OFFICER OF ANY DISCREPANCIES IN WRITING IMPACTING NEW WORK SUFFICIENTLY IN ADVANCE OF NEW WORK SO AS TO NOT CAUSE CONSTRUCTION DELAYS. INCLUDE INFORMATION ON LOCATION, ELEVATION, UTILITY TYPE AND SIZE.
9. EXISTING FACILITIES, INCLUDING BUT NOT LIMITED TO ROADS, WALLS, FENCES, STRUCTURES AND UTILITIES, DAMAGED BY CONTRACTOR'S OPERATIONS SHALL BE RESTORED TO MATCH ORIGINAL PRE–CONSTRUCTION CONDITION AND TO THE SATISFACTION OF THE CONTRACTING OFFICER WITHOUT ADDITIONAL COST TO THE GOVERNMENT
10. ALL DISTURBED ASPHALT, GRASS, DRAINAGE PATTERNS, ROADSIDE DITCHES, TRAILS AND GRADE SHALL BE RESTORED TO ITS ORIGINAL CONDITION OR AS CALLED FOR ON THE CONTRACT DOCUMENTS, WHICHEVER IS MORE STRINGENT.
11. CONTRACTOR SHALL FURNISH AND INSTALL EVERYTHING REQUIRED TO PROVIDE COMPLETE AND OPERABLE FACILITIES AS SHOWN HEREIN. IF THERE IS AN OMISSION ON THE CONSTRUCTION DOCUMENTS, SUCH OMISSION SHALL NOT BE CONSTRUED TO MEAN THAT THE CONTRACTOR IS NOT REQUIRED TO FURNISH OR PROVIDE EVERYTHING THAT IS NECESSARY TO PROVIDE COMPLETE AND OPERABLE FACILITIES.
12. ALL CONTRACTORS WORKING WITHIN THE PROJECT BOUNDARIES ARE RESPONSIBLE FOR COMPLIANCE WITH ALL APPLICABLE SAFETY LAWS. CONTRACTOR IS RESPONSIBLE FOR PROVIDING ALL EMPLOYEES AND/OR SUBCONTRACTORS WITH PERSONAL PROTECTIVE EQUIPMENT AND FOLLOWING ALL SAFETY PROTOCOLS, TO INCLUDE WORK IN ATTIC AND CRAWL SPACES IN THE EVENT RODENT DROPPINGS/NESTS ARE PRESENT.
13. ALL EXISTING VALVES AND EQUIPMENT SHALL BE OPERATED BY THE NPS UTILITIES OPERATOR, OR IN THE OBSERVANCE OF THE OPERATOR WITH PRIOR APPROVAL.
14. CONTRACTOR TO SUBMIT SERVICE INTERRUPTION PLAN AND NOTIFY NPS CONTRACTING OFFICER AT LEAST 72 HOURS PRIOR TO ANY UTILITY OR SERVICE INTERRUPTIONS.
15. CONTRACTOR SHALL PROVIDE TRACER WIRE AND LOCATOR TAPE FOR ALL BURIED PIPING AND CONDUITS.
16. ALL COSTS INCURRED IN CORRECTION OF DEFICIENT WORK SHALL BE THE RESPONSIBILITY OF THE CONTRACTOR.
17. UPON THE COMPLETION OF WORK, THE CONTRACTOR SHALL SUBMIT A SET OF "RED–LINED" RECORD DRAWINGS TO THE CONTRACTING OFFICER SHOWING ALL DEVIATIONS, CHANGES, ADDITIONS, AND DELETIONS MADE DURING CONSTRUCTION. ONE SET SHALL BE MAINTAINED AT THE SITE AND SHALL BE UPDATED DAILY.
18. STAGING AREAS SHALL BE DEFINED BY CONTRACTING OFFICER UNLESS OTHERWISE DELINEATED IN THIS PLAN SET.
19. CONSTRUCTION FENCING OR BARRIERS SHALL BE PROVIDED WHERE NECESSARY TO PREVENT THE PUBLIC OR PARK STAFF FROM ENTERING WORK AREAS.
20. CONTRACTOR SHALL MAINTAIN VEHICULAR AND PEDESTRIAN TRAFFIC ON ALL EXISTING DRIVEWAYS, ROADS AND PATHS NOT UNDER CONSTRUCTION. ALL DRIVEWAYS AND STREET APPROACHES SHALL BE OPENED TO ALLOW VEHICLE ACCESS AT THE END OF THE WORK DAY. CONTRACTOR SHALL COORDINATE WITH NPS AND PREPARE A TRAFFIC AND PEDESTRIAN CONTROL PLAN FOR ALL AREAS AFFECTED BY CONSTRUCTION.
21. ALL EXISTING TREES TO REMAIN UNLESS OTHERWISE SPECIFIED.
22. ESTABLISHMENT OF A CONSTRUCTION CAMP WILL NOT BE PERMITTED WITHIN PARK BOUNDARIES.
23. THE CONTRACTOR SHALL END PLACEMENT FOR ALL SURFACE CONCRETE WORK AT EITHER EXPANSION OR CONSTRUCTION JOINTS.
24. THE NPS SHALL IMMEDIATELY BE NOTIFIED IN WRITING BY THE CONTRACTOR OF ANY IDENTIFIED CONDITIONS THAT REQUIRE DEVIATIONS FROM THESE PLANS AND/OR SPECIFICATIONS. ANY REVISIONS TO THE IMPROVEMENT PLAN WILL BE PROCESSED IN ACCORDANCE WITH THE SPECIFICATIONS AND CONTRACT DOCUMENTS.
25. ALL EXCAVATIONS 5' IN DEPTH OR GREATER SHALL BE SHORED AND BRACED ACCORDING TO OSHA REGULATIONS. IF LESS THAN 5' DEEP, A COMPETENT PERSON MAY DETERMINE THAT A PROTECTIVE SYSTEM IS NOT REQUIRED.
26. UNLESS OTHERWISE INDICATED, DEMOLISHED MATERIALS BECOME THE PROPERTY OF THE CONTRACTOR. COMPLY WITH EPA REGULATIONS AND DISPOSAL REGULATIONS OF AUTHORITIES HAVING JURISDICTION. CONDUCT ANY DEMOLITION DUTIES WITHOUT DISRUPTION OF OCCUPANTS.
27. ALL EXISTING FACILITIES AND UTILITIES SHALL BE PROTECTED UNLESS NOTED TO BE REMOVED ON THE DRAWINGS.
28. PIPE DEFLECTION SHALL BE PER MANUFACTURERS RECOMMENDATION.
29. THRUST BLOCKING SHALL BE PLACED AT ALL BENDS (HORIZONTAL OR VERTICAL) 11.25 DEGREES OR GREATER, AND AS SHOWN IN THE STANDARD DETAILS.
30. PIPE SUPPORTS SHALL BE INSTALLED AS SHOWN ON THE PLANS, AS DEEMED NECESSARY IN THE FIELD, OR AS DIRECTED BY THE CONTRACTING OFFICER FOR SUPPORT OF ALL PIPING BOTH NEW AND EXISTING.
31. ALL VALVE RISERS ON VALVES ABANDONED IN THE CURRENT PROJECT SHALL BE REMOVED UNLESS OTHERWISE NOTED TO RETAIN AND RETURNED TO THE NPS IF REQUESTED.
32. ALL MECHANICAL JOINTS SHALL BE RESTRAINED IN ACCORDANCE WITH THE PROJECT SPECIFICATION.
33. ALL LABORATORY AND FIELD MATERIALS TESTING SHALL BE DONE IN ACCORDANCE WITH THE SPECIFICATIONS.
34. CONSTRUCTION PROJECT WILL DISTURB MORE THAN ONE–ACRE, THE CONTRACTOR SHALL FILE AND SUBMIT A NOTICE OF INTENT (NOI) AND A STORM WATER POLLUTION PREVENTION PLAN (SWPPP). THE CONTRACTOR SHALL PREPARE A SWPPP MEETING THE REQUIREMENTS OF THE NATIONAL PARK SERVICE FOR CONSTRUCTION ACTIVITIES.
35. SLUDGE MANAGEMENT AND DISPOSAL ARE THE RESPONSIBILITY OF THE CONTRACTOR.
36. SOILS UNDER AND AROUND ASH MOUNTAIN'S EXISTING LAGOONS SHALL BE TESTED BY THE CONTRACTOR FOR SLUDGE CONTAMINATION AND TO BE REMOVED AND DISPOSED OF BY THE CONTRACTOR PER STATE REGULATORY REQUIREMENTS.
37. SEE SPECIFICATIONS FOR ADDITIONAL PROJECT REQUIREMENTS.

WORK RESTRICTIONS

1. WORK SHALL BE GENERALLY PERFORMED FROM 8:00 A.M. TO 4:30 P.M. MONDAY THROUGH FRIDAY. TEN (10) HOUR WORK DAYS MAY BE ALLOWED WITH WRITTEN APPROVAL FROM THE CONTRACTING OFFICER. WEEKEND AND HOLIDAY WORK SHALL BE AVOIDED AND WILL ONLY BE ALLOWED WITH WRITTEN APPROVAL FROM THE CONTRACTING OFFICER.
2. SEE SPECIFICATIONS FOR ADDITIONAL WORK RESTRICTIONS AND REQUIREMENTS.

EROSION & SEDIMENT CONTROL NOTES

1. ALL EQUIPMENT SHALL BE POWER WASHED AND INSPECTED BY A PARK REPRESENTATIVE PRIOR TO ENTERING THE PARK TO ENSURE IT IS FREE OF NON–NATIVE WEEDS AND/OR SEEDS AS WELL AS OIL LEAKS (CONTRACTOR IS RESPONSIBLE FOR COORDINATING THE INSPECTION AT LEAST 48 HOURS IN ADVANCE). IN ADDITION, SOURCES OF IMPORTED ROCK, SAND, GRAVEL, AND SOIL SHALL BE INSPECTED BY NPS FOR INVASIVE NON–NATIVE PLANTS, WEEDS AND/OR SEEDS (NOTIFY NPS 30 CALENDAR DAYS IN ADVANCE FOR INSPECTION).
2. CONTRACTOR SHALL PROVIDE, MAINTAIN, AND BE RESPONSIBLE FOR ALL EROSION AND SEDIMENT CONTROL STRUCTURES AND PRACTICES IN ACCORDANCE WITH THE PARK'S BEST MANAGEMENT PRACTICES AS WELL AS ANY LOCAL, STATE, AND FEDERAL REQUIREMENTS FOR WATER QUALITY AND EROSION AND SEDIMENT CONTROL. EXCELSIOR OR COIR FIBER PRODUCTS SHALL BE USED IN EROSION CONTROL BLANKETS AND SEDIMENT LOGS. JUTE OR COTTON SHALL BE USED FOR NETTING IN EROSION CONTROL BLANKETS. NO "CERTIFIED WEED FREE" PRODUCTS ARE ALLOWED. NO PLASTIC NETTING PRODUCTS ARE ALLOWED.
3. CONTRACTOR TO PRESERVE EXISTING VEGETATION AND MINIMIZE THE AREAS DISTURBED BY CONSTRUCTION ACTIVITY.
4. CONTRACTOR SHALL PROVIDE INLET PROTECTION TO ALL CULVERTS, INLETS, CANALS, AND SUB–SURFACE DRAINS IN THE PROJECT VICINITY.
5. SEE SPECIFICATIONS FOR ADDITIONAL REQUIREMENTS.

PROJECT GRADING OPERATIONS DURING PHASED CONSTRUCTION

1. ASH MOUNTAIN AND BUCKEYE HOUSING GRADING OPERATIONS SHALL BE COORDINATED WITH ASH MOUNTAIN CONSTRUCTION PHASES TO MINIMIZE THE AMOUNT OF IMPORT FILL BROUGHT IN FROM OUTSIDE THE PARK.

REGISTERED PROFESSIONAL ENGINEER
DAVID BARTON BROOKE
NO. 72417
100% DRAFT
CIVIL
STATE OF CALIFORNIA

DESIGNED: D. BROOKE CADD M. GARCIA TECH. REVIEW: J. BLOM DATE: 04/07/2022	SUB SHEET NO. G1.2	TITLE OF SHEET CIVIL GENERAL NOTES REHABILITATE ASH AND BUCKEYE WASTEWATER TREATMENT PLANTS SEQUOIA & KINGS CANYON NATIONAL PARKS	DRAWING NO. 102 / 177,507 PMIS/PKG NO. 317446 SHEET 4 OF 135

25/04/2022 11:17 MARIO GARCIA G:\CLIENTS\NPS\SEKI\317446\DRAWINGS\ASH MOUNTAIN DWGS\1_ASH MOUNTAIN WWTP\4 – CIVIL GENERAL NOTES.DWG

UTILITY LINE SYMBOLS

- 6" DIP W — WATERLINE WITH TYPE OF PIPE AND DIAMETER
- 8" PVC S — GRAVITY SEWER LINE WITH TYPE OF PIPE AND DIAMETER
- 4" PE FM — SEWER FORCE MAIN WITH TYPE OF PIPE AND DIAMETER
- 18" RCP ST — STORM DRAIN WITH TYPE OF PIPE AND DIAMETER
- G — GAS LINE
- AE — AERIAL (OVERHEAD) ELECTRICAL
- UE — UNDERGROUND ELECTRICAL
- AT — AERIAL (OVERHEAD) TELEPHONE
- UT — UNDERGROUND TELEPHONE
- EP — EDGE OF PAVEMENT
- EG — EDGE OF GRAVEL

OTHER LINE SYMBOLS

- CONSTRUCTION LIMITS
- FENCE

NEW VERSUS EXISTING UTILITY LINES

- **6" DIP W** — NEW WATER LINE WITH TYPE OF PIPE AND DIAMETER
- 6" DIP W — WATER LINE WITH TYPE OF PIPE AND DIAMETER

ABANDONED UTILITY LINES

- 6" DIP W — EXISTING UTILITY (ABANDONED)
- 6" DIP W — EXISTING UTILITY TO BE ABANDONED
- 6" DIP W — EXISTING UTILITY TO BE REMOVED

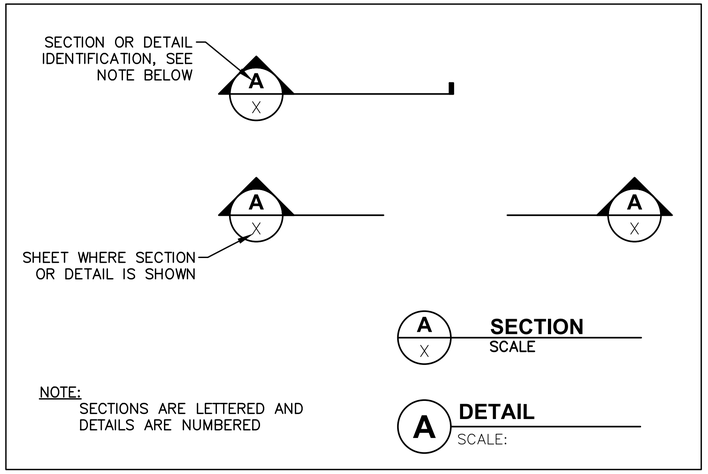

NOTE:
SECTIONS ARE LETTERED AND DETAILS ARE NUMBERED

NOTE:
THIS IS A STANDARD SHEET. THEREFORE, SOME ABBREVIATIONS APPEARING ON INDIVIDUAL DRAWINGS TAKE PRECEDENCE OVER THIS SHEET,

UTILITY SYMBOLS

- NEW FIRE HYDRANT
- EX. FIRE HYDRANT
- NEW YARD HYDRANT
- EX. YARD HYDRANT
- NEW GATE VALVE
- GATE VALVE
- NEW METER
- METER
- NEW MANHOLE
- MANHOLE
- NEW CATCH BASIN
- CATCH BASIN
- NEW BUTTERFLY VALVE
- NEW CHECK VALVE
- NEW PLUG VALVE
- GAUGE
- PIPE CAP
- PIPE BREAK
- FLOW ARROW
- EXISTING TRANSFORMER
- EXISTING ELECTRICAL METER
- PB 1 — NEW PULLBOX, 1 INDICATES PULLBOX NUMBER
- UTILITY POLE
- GAS VALVE
- NEW SIGN
- SIGN
- CONTROL POINT
- COMBINATION AIR VAC & RELEASE VALVE
- NEW THRUST BLOCK
- NEW PUMP, CENTRIFUGAL
- NEW PUMP, AIR DIAPHRAGM
- WEIR OVERFLOW
- FLOW METER
- SLIDE GATE
- SLUICE GATE
- CV — CONTROL VALVE
- M — MOTORIZED VALVE
- HOSE BIB
- SB T — EXISTING TELEPHONE/FIBER PULL BOX
- SB E — EXISTING ELECTRICAL PANEL
- UNION
- REDUCER
- CLEANOUT

PIPE TYPES

CISP	CAST IRON SOIL PIPE.
CMP	CORRUGATED METAL PIPE
CU	COPPER PIPE
DI, DIP	DUCTILE IRON PIPE
GSP	GALVANIZED STEEL PIPE
HDPE	HIGH DENSITY POLYETHYLENE
PT	PLASTIC TUBING
PVC	POLYVINYL CHLORIDE PIPE
WS	WELDED STEEL PIPE

REGISTERED PROFESSIONAL ENGINEER
DAVID BARTON BROOKE
NO. 72417
CIVIL
STATE OF CALIFORNIA
100% DRAFT

DESIGNED: D. BROOKE CADD M. GARCIA TECH. REVIEW: J. BLOM DATE: 04/07/2022	SUB SHEET NO. G1.3	TITLE OF SHEET SYMBOLS LEGEND REHABILITATE ASH AND BUCKEYE WASTEWATER TREATMENT PLANTS SEQUOIA & KINGS CANYON NATIONAL PARKS	DRAWING NO. 102 / 177,507 PMIS/PKG NO. 317446 SHEET 5 OF 135

18/04/2022 07:46 MARIO GARCIA G:\CLIENTS\NPS\SEKI\317446\DRAWINGS\ASH MOUNTAIN DWGS\1_ASH MOUNTAIN WWTP\5 - SYMBOLS LEGEND.DWG

@	AT
AB	ANCHOR BOLT
AC	ASBESTOS CEMENT
AD	ALGEBRAIC DIFFERENCE IN GRADE
ADA	AMERICANS WITH DISABILITIES ACT
ADJ	ADJUSTABLE, ADJACENT
AFF	ABOVE FINISHED FLOOR
AGGR	AGGREGATE
AH	AHEAD
AHR	ANCHOR
ALTN	ALTERNATE
ALUM, AL	ALUMINUM
ALS	ALUM SOLUTION
ANSI	AMERICAN NATIONAL STANDARDS INSTITUTE.
AP	AERIAL POWER
APPROX	APPROXIMATE, APPROXIMATELY
APVD	APPROVED
ARCH	ARCHITECT, ARCHITECTURAL
ARV	AIR RELEASE VALVE
AT	AERIAL TELEPHONE
ASC	ASPHALT5 CONCRETE
ASTM	AMERICAN SOCIETY OF TESTING AND MATERIALS
AUTO	AUTOMATIC
AUX	AUXILIARY
AVRV	AIR & VACUUM RELEASE VALVE
AWS	AMERICAN WELDING SOCIETY
B	BOTTOM
BA	BUBBLER AIR
BC	BRASS CAP, BOTTOM OF CURB
BD	BOARD
BF	BLIND FLANGE, BOTTOM FACE
BK	BACK
BLDG	BUILDING
BLK	BLOCK
BLKG	BLOCKING
BM	BENCH MARK, BEAM
BO	BOTTOM OF
BOC	BOTTOM OF CONCRETE
BOF	BOTTOM OF FOOTING
BOS	BOTTOM OF STEEL
BOT	BOTTOM
BRG	BEARING
BRK	BRICK, BREAK
BTWN	BETWEEN
BU	BELL UP
BUR	BUILT UP ROOFING
BUV	BUTTERFLY VALVE
BV	BALL VALVE
BVCE	BEGIN VERTICAL CURVE ELEVATION
BVCS	BEGIN VERTICAL CURVE STATION
BW	BOTTOM OF WALL, BACKWASH WATER
BWR	BACK WASH WATER RETURN
°C	DEGREE CELSIUS
C TO C	CENTER TO CENTER
C & G	CURB AND GUTTER
CALTRANS	STATE OF CALIFORNIA DEPARTMENT OF TRANSPORTATION
CB	CATCH BASIN
CCWTP	CLOVER CREEK WASTEWATER TREATMENT PLANT
CFM	CUBIC FEET PER MINUTE
CFS	CUBIC FEET PER SECOND
CHEM	CHEMICAL
CHV	CHECK VALVE
CI	CAST IRON PIPE
CJ	CONSTRUCTION / CONTROL JOINT
CL	CLASS, CENTERLINE, CLEAR (COVER)
CLG	CEILING, CHLORINE GAS
CLR	CLEAR
℄	CENTERLINE
CLS	CHLORINE SOLUTION
CMP	CORRUGATED METAL PIPE
CMT	CEMENT, CERAMIC MOSAIC TILE
CMU	CONCRETE MASONRY UNIT
CO	CLEANOUT
COL	COLUMN
CONC	CONCRETE
CONN	CONNECTION
CONST	CONSTRUCTION
CONT	CONTINUOUS
COORD	COORDINATE
COP	COPPER
COR	CONTRACTION OFFICERS REPRESENTATIVE
CORR	CORRIDOR
CPLG	COUPLING
CPT	CARPET
CS	COMFORT STATION
CTR	CENTER
CU	COPPER
CU	FT CUBIC FEET
CU	IN CUBIC INCH
CVR PLS	COVER PLATES
CVS	SWING CHECK VALVE
CW	DOMESTIC COLD WATER
CWT	CERAMIC WALL TILE
Δ	DELTA (ANGLE)
db	BAR DIAMETER
D	DRAIN, DIFFUSER
DA	DIFFUSED AIR
DBA	DEFORMED BAR ANCHOR
DBL	DOUBLE
DET	DETAIL
DF	DRINKING FOUNTAIN
DI	DUCTILE IRON PIPE, DROP INLET
DIA, ø	DIAMETER
DIAG	DIAGONAL
DIAPH V	DIAPHRAGM VALVE
DIM	DIMENSION
DIST	DISTANCE
DN	DOWN
DP	DAMP PROOFING
DR	DOOR
DS	DIGESTED SLUDGE
DW	DISHWASHER
DWG	DRAWING
E	ENERGY
(E)	EPOXY COATED REINFORCING
EA	EACH
ECC	ECCENTRIC
ED	EQUIPMENT DRAIN
EE	ENGINE EXHAUST
EF	EACH FACE
EJ	EXPANSION JOINT
EL, ELEV	ELEVATION
ENGR	ENGINEER
ELB	ELBOW
ELEC	ELECTRIC, ELECTRICAL
EOP, EP	EDGE OF PAVEMENT
EQ	EQUIVALENT, EQUATION
EQPT	EQUIPMENT
EQL SP	EQUALLY SPACED
ES	EVALUATION SERVICE
EVCS	END VERTICAL CURVE STATION
EVCE	END VERTICAL CURVE ELEVATION
EW	EACH WAY
EXP	EXPOSED EXP
JT	EXPANSION JOINT EXP
MTL	EXPANSION MATERIAL
EX	EXISTING
EXT	EXTERIOR
FC	FLEXIBLE COUPLING
FCA	FLANGED COUPLING ADAPTER
FCO	FLOOR CLEANOUT
FD	FLOOR DRAIN
FDC	FIRE DEPARTMENT CONNECTION
FDN	FOUNDATION
FE	FINAL EFFLUENT
FEF	FILTER EFFLUENT
FEC	FIRE EXTINGUISHER CABINET
FES	FILTER EFFLUENT SAMPLE
FF	FINISHED FLOOR
FG	FINISHED GRADE
FH	FIRE HYDRANT
FHA	FIRE HYDRANT ASSEMBLY
FIG	FIGURE
FIN	FINISHED
FL	FLOW LINE
FLASH	FLASHING
FLR	FLOOR
FLG	FLANGE
FM	FORCE MAIN
FOR	FUEL OIL RETURN
FP	FILTER POLYMER
FR	FILTRATE RETURN
FRP	FIBERGLASS REINFORCED PLASTIC
FS	FAR SIDE
FSC	FINAL SCUM
FSL	FINAL SLUDGE
FT	FOOT, FEET
FTG	FOOTING
°F	DEGREE FAHRENHEIT
FTW	FILTER TO WASTE
FU	ULTIMATE STRENGTH
FV	FUEL OIL VENT
FW	FINISHED WATER
FY	YIELD STRENGTH
G	GAS, GRILLE
GA	GAUGE
GAL	GALLON
GALV	GALVANIZED
GB	GRADE BREAK
GCO	GRADE CLEANOUT
GL	GLASS
GLV	GLOBE VALVE
GND	GROUND
GP	GUARD POST
GPD	GALLONS PER DAY
GPH	GALLONS PER HOUR
GPM	GALLONS PER MINUTE
GSKT	GASKET
GSP	GALVANIZED STEEL PIPE
GV	GATE VALVE
GVL	GRAVEL
GYP, BD	GYPSUM BOARD
H	HEIGHT, HIGH
HAS	HEADED ANCHOR STUD
HB	HOSE BIB
HC	HOLLOW CORE
HD	HUB DRAIN, HEAD
HDG	HOT DIP GALVANIZED
HDPE	HIGH DENSITY POLYETHYLENE (POLY)
HDR	HEADER
HDWR	HARDWARE
HGL	HYDRAULIC GRADE LINE
HGT, HT	HEIGHT
HM	HOLLOW METAL
HORIZ, HOR.	HORIZONTAL
HP	HORSEPOWER
HPG	HIGH POINT GROUT
HVAC	HEATING, VENTILATING & AIR CONDITIONING
HW	DOMESTIC HOT WATER
HWL	HIGH WATER LEVEL
HWR	HOT WATER RETURN
HWS	HOT WATER SUPPLY
HWY	HIGHWAY
I & C	INSTRUMENTATION & CONTROL
IA	INSTRUMENT ALIN
IDC	INTERNATIONAL BUILDING CODE
ICBO	INTERNATIONAL CONFERENCE OF BUILDING OFFICIALS
ICBO-ES	INTERNATIONAL CONFERENCE OF BUILDING OFFICIALS EVALUATION SERVICE
ICC	INTERNATIONAL CODE COUNCLE
ld	DEVELOPMENT LENGTH
ldh	HOOKED BAR DEVELOPMENT LENGTH
ID	INSIDE DIAMETER
IE	INVERT ELEVATION
IF	INSIDE FACE
IN	INCH
INT	INTERSECTION, INTERIOR
INV	INVERT, INTERIOR
IPT	IRON PIPE THREAD
IRR	IRRIGATION
JST	JOIST
JT	JOINT
K	RATE OF VERTICAL CURVATURE
KG	KNIFE GATE
KIT	KITCHEN
KW	KILOWATT
L	LENGTH, LONG
LAV	LAVATORY
LBS	POUNDS
LB/CU FT	POUNDS PER CUBIC FOOT
LF	LINEAR FEET
LH	LEFT HAND
LNTL	LINTEL
LOC	LOCATION
LONG	LONGITUDINAL
LV	LINE VALVE
LWL	LOW WATER LEVEL
MATL, MAT	MATERIAL
MAX	MAXIMUM
MB	MACHINE BOLT
MBV	MOTORIZED BALL VALVE
MCC	MOTOR CONTROL CENTER
MECH	MECHANICAL
MFR	MANUFACTURER
MGD	MILLION GALLONS PER DAY
MG/L	MILLIGRAMS PER LITER
MGR	MANAGER
MH	MANHOLE
MIN	MINIMUM
MISC	MISCELLANEOUS
MJ	MECHANICAL JOINT
ML	MIXED LIQUOR
MR	MOISTURE RESISTANT
MO	MID-ORDINATE / MASONRY OPENING
MSL	MEAN SEA LEVEL
MTD	MOUNTED
MTL	METAL
MV	MUD VALVE
(N)	NEW
NF	NON-FREEZE
NIC	NOT IN CONTRACT
NO	NUMBER
NOM	NOMINAL
NPS	NATIONAL PARK SERVICE
NPW	NON-POTABLE WATER
NPT	NATIONAL PIPE THREADS
NRA	NATIONAL RECREATION AREA
NS	NEAR SIDE
NST	NATIONAL STANDARD THREAD
NTS	NOT TO SCALE
NV	NEEDLE VALVE
OC	ON CENTER
OD	OUTSIDE DIAMETER
OF	OUTSIDE FACE, OVERFLOW
OHE	OVERHEAD ELECTRIC
OPER	OPERATION
OPNG, OPG	OPENING
OPP	OPPOSITE
OVHD	OVERHEAD
P	PAINT
PA	PRE-AERATION AIR
PB	PULL BOX
PC	POINT OF CURVE
PCF	POUNDS PER CUBIC FOOT
PD	PUMPED DRAINAGE
PE	PLAIN END
PEP	POLYETHYLENE PIPE
PEPP	POLYETHYLENE PRESSURE PIPE
PERF	PERFORATED
PERIM	PERIMETER
PG	PRESSURE GAUGE
PI	POINT OF INTERSECTION
P&ID	PIPING AND INSTRUMENTATION DIAGRAM
PJF	PREMOLDED JOINT FILLER
PL	PLATE
PLAS LAM	PLASTIC LAMINATE
PLF	POUNDS PER LINEAL FOOT
PLYWD	PLYWOOD
POB	POINT OF BEGINNING
POL	POLYMER
POU	POINT OF USE
PP	POWER POLE
PRCST	PRECAST
PREFIN	PREFINISHED
PRESS	PRESSURE
PRI	PRIMARY
PROP	PROPERTY
PRV	PRESSURE REDUCING VALVE
PSF	POUNDS PER SQUARE FOOT
PSI	POUNDS PER SQUARE INCH
PSIG	POUNDS PER SQUARE INCH, GAUGE
PSV	PRESSURE SUSTAINING VALVE
PSW	PUMP SEAL WATER
PT	POINT OF TANGENCY
PTD	PAINTED
PV	PLUG VALVE
PVC	POLYVINYL CHLORIDE
PVI	POINT OF VERTICAL INTERSECTION
PVMT	PAVEMENT
PW	POTABLE WATER
R&R, R/R	REMOVE AND REPLACE
R, RAD	RADIUS, RISER, REGISTER
RB	RUBBER BASE
RCP	REINFORCED CONCRETE PIPE
RD	ROOF DRAIN, ROAD
REBAR	REINFORCING BAR
RECIRC	RECIRCULATION
RED	REDUCER
REF, RE	REFER, REFERENCE
REINF	REINFORCING, REINFORCE
REQD	REQUIRED
RH	RIGHT HAND
RM	ROOM
RND	ROUND
RO	ROUGH OPENING
ROW, R/W	RIGHT OF WAY
RP	REDUCE PRESSURE
RPP	REINFORCED POLYPROPYLENE
RS	RAW SEWAGE
RST	REINFORCING STEEL
RW	RAW WATER
RWI	RAW WATER INFLUENT
S	SEWER, SLOPE
SA	SERVICE AIR
SAC	SUSPENDED ACOUSTICAL CEILING
SC	SOLID CORE, SCUM
SD	SANITARY DRAIN
SG	SLUICE GATE
SL	SLOPE
SCFM	STANDARD CUBIC FEET PER MINUTE
SCHED, SCH	SCHEDULE
SCV	SPLIT CHECK VALVE
SE	SECONDARY EFFLUENT
SECT	SECTION
SED	SEE ELECTRICAL DRAWINGS
SEP	SEPTAGE
SG	SLUCE GATE
SH, SHT	SHEET
SIM	SIMILAR
S.F.H.	STRUCTURAL FIRE HYDRANT
SFM	SEWAGE FORCE MAIN
SJI	STEEL JOIST INSTITUTE
SMD	SEE MECHANICAL DRAWINGS
SML	SAMPLE-MIXED LIQUIDS
SMS	SAMPLE-SLUDGE
SOG	SULFUR DIOXIDE GAS
SOLV	SOLENOID VALVE
SP	SPACE, SPACES, SENSING PRESSURE
SPD	SEE PROCESS DRAWINGS
SPEC	SPECIFICATIONS
SPEC'D	SPECIFIED
SQ, □	SQUARE
SQ FT, SF	SQUARE FOOT
SQ IN	SQUARE INCH
SSC	SECONDARY SCUM
SSD	SEE STRUCTURAL DRAWINGS
SSH	SECONDARY SLUDGE
SST	STAINLESS STEEL
STA	STATION
STD	STANDARD
STL	STEEL
STRUCT	STRUCTURE, STRUCTURAL
SUP	SUPERNATANT
SYMM	SYMMETRICAL
SWPPP	STORM WATER POLLUTION PREVENTION PLAN
T	TREAD, TOP, TELEPHONE
TB	THRUST BLOCK
T&B	TOP AND BOTTOM
T&G	TONGUE AND GROOVE
TAN	TANGENT
TB	THRUST BLOCK
TBM	TEMPORARY BENCH MARK
TC	TOP OF CONCRETE
TDH	TOTAL DYNAMIC HEAD
TECH	TECHNICAL
TEL	TELEPHONE
TEMP	TEMPERATURE
TF	TOP FACE
TH	TEST HOLE
THD'D	THREADED
THK	THICK (NESS)
TO	TOP OF
TOB	TOP OF BEAM, TOP OF BANK
TOC	TOP OF CURB, CONCRETE
TOF	TOP OF FOOTING
TOM	TOP OF MASONRY BLOCK
TOP	TOP OF PIPE
TOPO	TOPOGRAPHY
TOS, TST	TOP OF STEEL
TOW	TOP OF WALL
TRANSV	TRANSVERSE
TS	CATHODIC PROTECTION TEST STATION
TV	THERMOSTATIC VALVE
TW	TRACER WIRE
TYP	TYPICAL
TZ	TERRAZZO
UBC	UNIFORM BUILDING CODE
UD	UNDERDRAIN
UG	UNDERGROUND
UGE	UNDERGROUND ELECTRIC
UN	UNION
UNO	UNLESS NOTED OTHERWISE
UP	UNDERGROUND POWER
UT	UNDERGROUND TELEPHONE
UV	ULTRAVIOLET
V	VENT
VB	VACUUM BREAKER
VC	VERTICAL CURVE
VCP	VITRIFIED CLAY PIPE
VCT	VINYL COMPOSITION TILE
VERT	VERTICAL
VG	VACUUM GAUGE
VIF	VERIFY IN FIELD
VP	VENT PIPE
VSW	VACUUM SWITCH
VTR	VENT THROUGH ROOF PIPE
W/	WITH
W/C	WATER TO CEMENT RATION
W/O	WITHOUT
W	WIDE, WATER
WAS	WASTE ACTIVATED SLUDGE
WC	WATER CLOSET
WCO	WALL CLEANOUT
WD	WOOD
WE	WATER ELEVATION
WFH	WILD LAND FIRE HYDRANT
WP	WORKING POINT, WATERPROOFING
WS	WATER STOP
WSE	WATER SURFACE ELEVATION
WT	WEIGHT
WTP	WATER TREATMENT PLANT
WWTP	WASTEWATER TREATMENT PLANT
WWF	WELDED WIRE FABRIC
YCO	YARD CLEANOUT
YD	YARD

OTHERS LISTED ELSEWHERE

STANDARD, GENERAL	Gx
ARCHITECTURAL	Ax
STRUCTURAL	Sx
MECHANICAL	Mx
ELECTRICAL	Ex
HEAT AND VENTILATION, AIR CONDITIONING	Hx

NOTE:

THIS IS A STANDARD SHEET. THEREFORE SOME ABBREVIATIONS APPEARING ON INDIVIDUAL DRAWINGS TAKE PRECEDENCE OVER THIS SHEET.

REGISTERED PROFESSIONAL ENGINEER
DAVID BARTON BROOKE
NO. 70417
100% DRAFT
CIVIL
STATE OF CALIFORNIA

DESIGNED: D. BROOKE	SUB SHEET NO.	TITLE OF SHEET	DRAWING NO. 102 / 177,507
CADD: M. GARCIA	G1.4	ABBREVIATIONS	PMIS/PKG NO. 317446
TECH. REVIEW: J. BLOM		REHABILITATE ASH AND BUCKEYE WASTEWATER TREATMENT PLANTS SEQUOIA & KINGS CANYON NATIONAL PARKS	SHEET 6 OF 135
DATE: 04/07/2022			

18/04/2022 07:47 MARIO GARCIA G:\CLIENTS\NPS\SEKI\317446\DRAWINGS\ASH MOUNTAIN DWGS\1_ASH MOUNTAIN WWTP\6 - ABBREVIATIONS.DWG

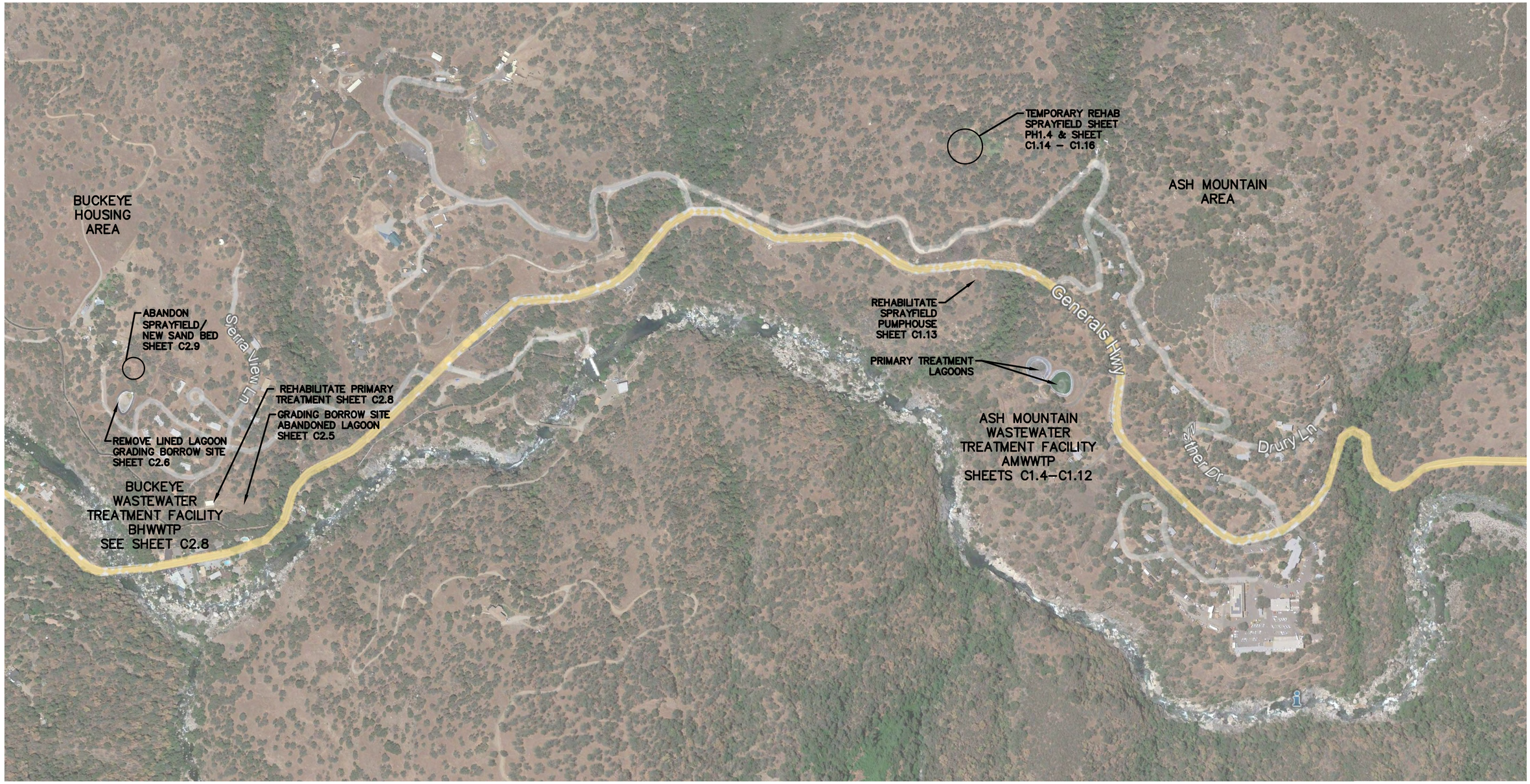

PROJECT SITE MAP AMWWTP & BHWWTP

REGISTERED PROFESSIONAL ENGINEER
DAVID BARTON BROOKE
NO. 70417
CIVIL
STATE OF CALIFORNIA
DRAFT
100%

125' 0 125' 250'
SCALE OF FEET

DESIGNED: D. BROOKE DRAWN: M. GARCIA TECH. REVIEW: J. BLOM DATE: 04/07/2022	SUB SHEET NO. G1.5	TITLE OF SHEET PROJECT SITE MAP AMWWTP & BHWWTP REHABILITATE ASH AND BUCKEYE WASTEWATER TREATMENT PLANTS SEQUOIA & KINGS CANYON NATIONAL PARKS	DRAWING NO. 102/177,507 PMIS/PKG NO. 317446 SHEET 7 OF 135

27/04/2022 09:54 BART BROOKE G:\CLIENTS\NPS\SEKI\317446\DRAWINGS\ASH MOUNTAIN DWGS\1_ASH MOUNTAIN WWTP\7 – PROJECT SITE MAP AMWWTP & BHWWTP.DWG

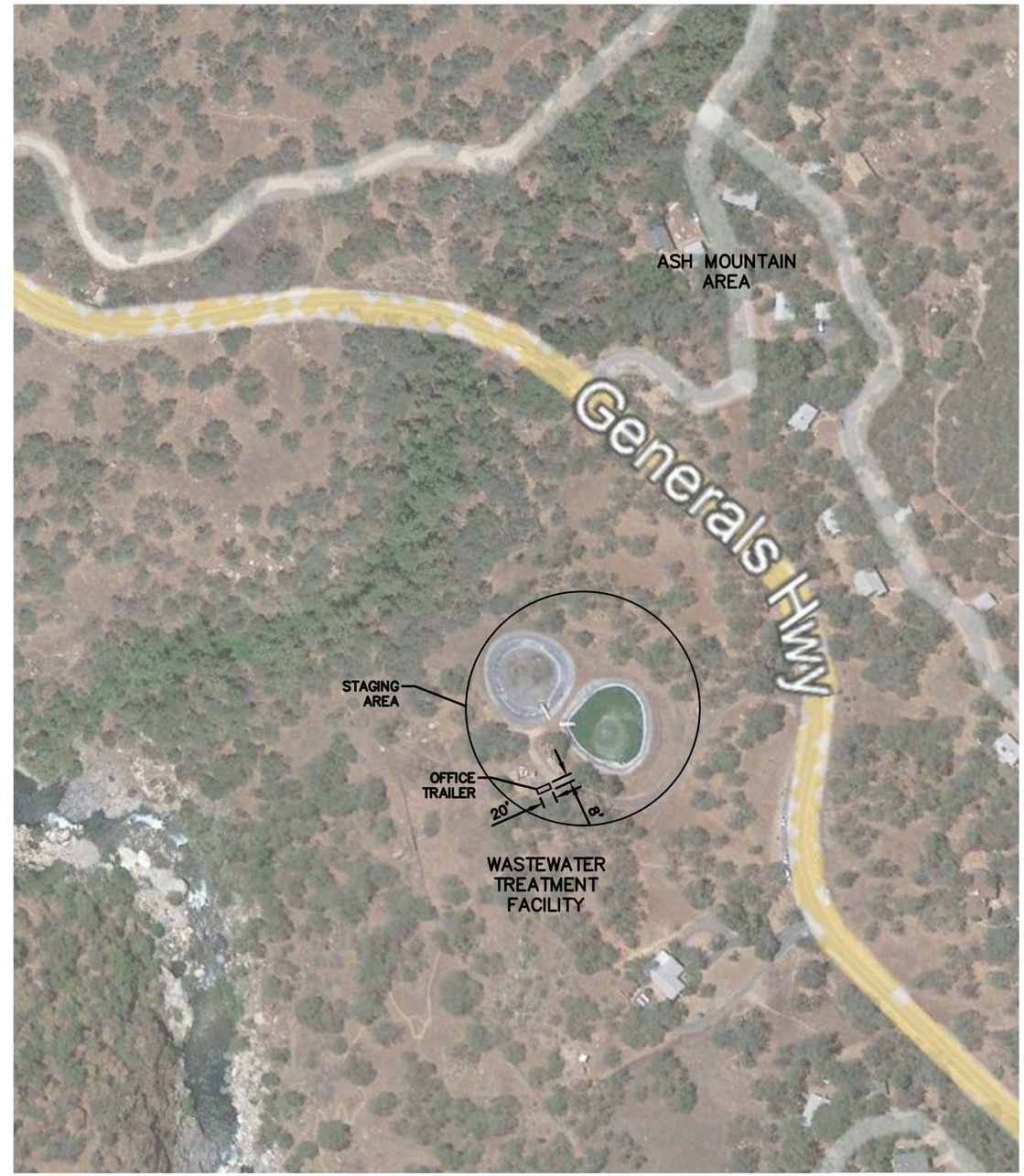

STAGING AREAS AMWWTP & BHWWTP

REGISTERED PROFESSIONAL ENGINEER
DAVID BARTON BROOKE
NO. 70417
100% DRAFT
CIVIL
STATE OF CALIFORNIA

100' 0 100' 200'
SCALE OF FEET

DESIGNED: D. BROOKE CADD: M. GARCIA TECH. REVIEW: J. BLOM DATE: 04/07/2022	SUB SHEET NO. G1.6	TITLE OF SHEET STAGING AREAS AMWWTP & BHWWTP REHABILITATE ASH AND BUCKEYE WASTEWATER TREATMENT PLANTS SEQUOIA & KINGS CANYON NATIONAL PARKS	DRAWING NO. 102 / 177,507 PMIS/PKG NO. 317446 SHEET 8 OF 135

26/04/2022 13:11 MARIO GARCIA G:\CLIENTS\NPS\SEKI\317446\DRAWINGS\ASH MOUNTAIN DWGS\1_ASH MOUNTAIN WWTP\8 - STAGING AREAS AMWWTP & BHWWTP.DWG

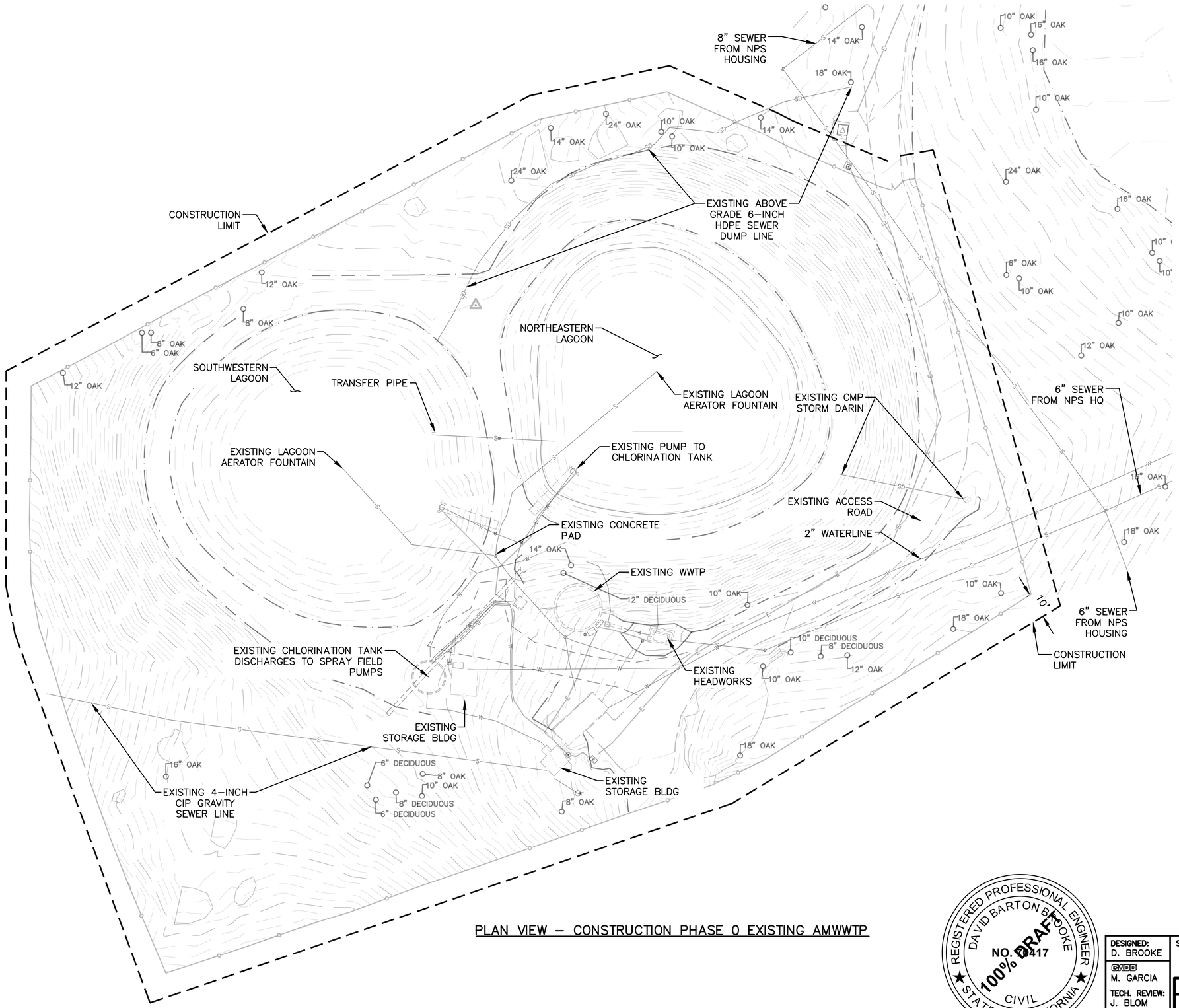

PLAN VIEW – CONSTRUCTION PHASE 0 EXISTING AMWWTP

NOTES PHASE 0:

1. COORDINATE CONSTRUCTION ACTIVITIES WITH PHASE 1 THROUGH PHASE 4
2. COORDINATION WITH GRADING OPERATIONS AT BUCKEYE HOUSING REQUIRED TO BRING IN IMPORT FILL DURING SUBSEQUENT CONSTRUCTION PHASES.
3. PHASING SEQUENCES SHOWN ON THIS SHEET ARE CONCEPTUAL ONLY. SEWAGE TREATMENT AND DISPOSAL ARE REQUIRED TO BE KEPT IN OPERATION THROUGHOUT THE DURATION OF ALL CONSTRUCTION ACTIVITIES AT ASH MOUNTAIN. CONTRACTOR CAN PROVIDE ALTERNATE SEQUENCING OR DIFFERENT SEQUENCING THAN WHAT IS PROVIDED ON THIS SHEET DEPENDING ON MEANS AND METHODS AVAILABLE TO THE CONTRACTOR.
4. SLUDGE MANAGEMENT AND DISPOSAL ARE THE RESPONSIBILITY OF THE CONTRACTOR.

CONCEPTUAL ONLY

20' 0 20' 40'
SCALE OF FEET

REGISTERED PROFESSIONAL ENGINEER
DAVID BARTON BROOKE
NO. 71417
CIVIL
STATE OF CALIFORNIA
100% DRAFT

DESIGNED: D. BROOKE CADD M. GARCIA TECH. REVIEW: J. BLOM DATE: 04/07/2022	SUB SHEET NO. PH1.0	TITLE OF SHEET CONSTRUCTION PHASE 0 EXISTING REHABILITATE ASH AND BUCKEYE WASTEWATER TREATMENT PLANTS SEQUOIA & KINGS CANYON NATIONAL PARKS	DRAWING NO. 102 / 177,507 PMIS/PKG NO. 317446 SHEET 9 OF 135

26/04/2022 12:38 MARIO GARCIA G:\CLIENTS\NPS\SEK\317446\DRAWINGS\ASH MOUNTAIN DWGS\2 PROJECT PHASING\9 – CONSTRUCTION PHASE 0 EXISTING .DWG

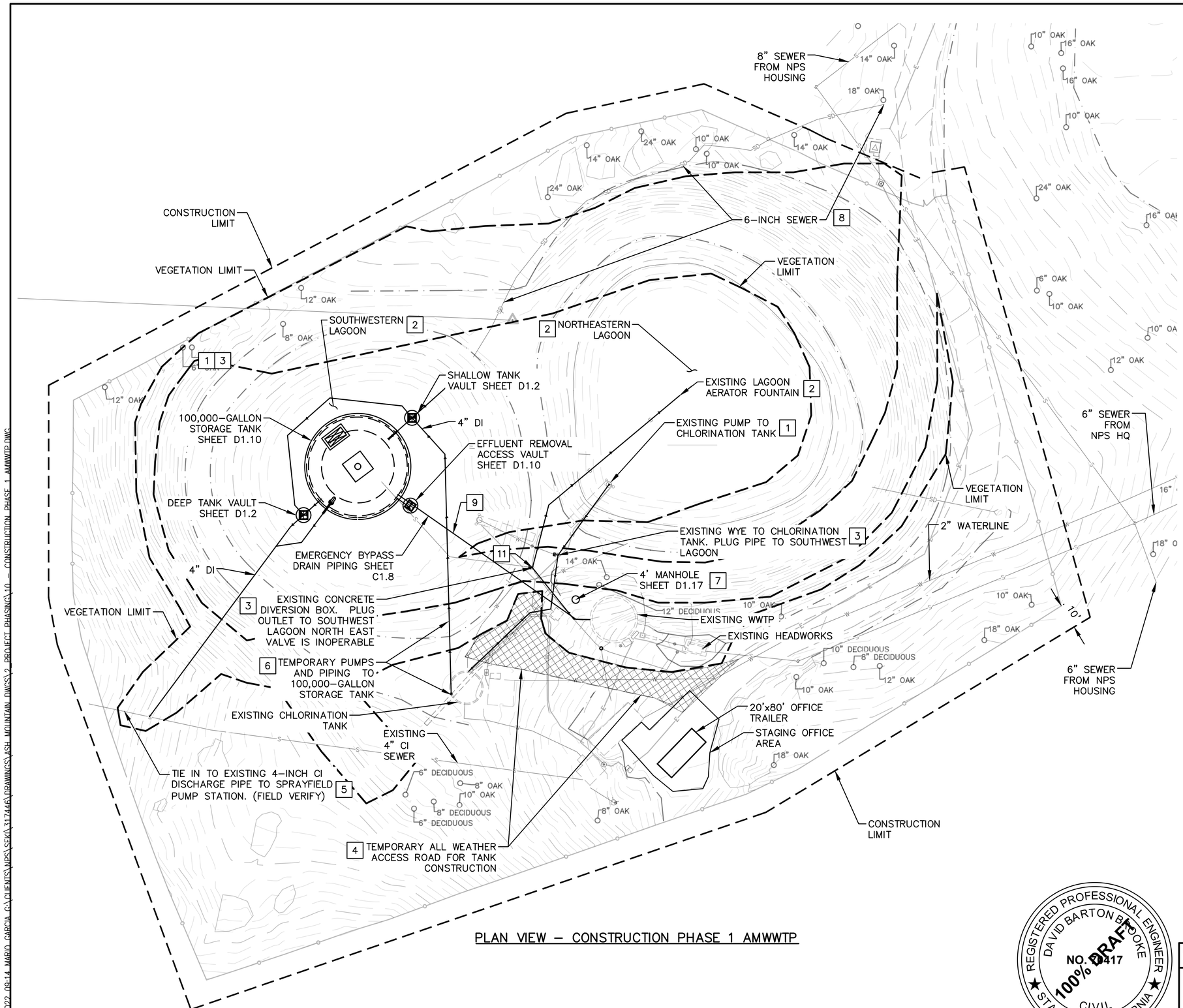

PLAN VIEW – CONSTRUCTION PHASE 1 AMWWTP

NOTES PHASE 1:

1. KEEP CURRENT WWTP SYSTEM FULLY OPERATIONAL.
2. PARK ALTERNATES OPERATION OF LAGOONS USING ONE AS STORAGE AND ONE AS DRYING BED.
3. RUN PHASE 1 CONSTRUCTED IMPROVEMENTS TO VERIFY SYSTEM IS FULLY OPERATIONAL BEFORE COMMENCING PHASE 2 WORK.
4. PHASE 4 CONSTRUCTION (SPRAY FIELD PUMPS, AND SPRAY FIELD REHABILITATION) CAN BE IMPLEMENTED DURING EITHER PHASE 1, PHASE 2, OR PHASE 3 CONSTRUCTION.
5. PHASING SEQUENCES SHOWN ON THIS SHEET ARE CONCEPTUAL ONLY. SEWAGE TREATMENT AND DISPOSAL ARE REQUIRED TO BE KEPT IN OPERATION THROUGHOUT THE DURATION OF ALL CONSTRUCTION ACTIVITIES AT ASH MOUNTAIN. CONTRACTOR CAN PROVIDE ALTERNATE SEQUENCING OR DIFFERENT SEQUENCING THAN WHAT IS PROVIDED ON THIS SHEET DEPENDING ON MEANS AND METHODS AVAILABLE TO THE CONTRACTOR.
6. SLUDGE MANAGEMENT AND DISPOSAL ARE THE RESPONSIBILITY OF THE CONTRACTOR.

KEYNOTES PHASE 1:

1. REMOVE SOUTHWESTERN LAGOON FROM FURTHER OPERATION. IF LAGOON IS CURRENTLY USED AS DRYING BED, REMOVE SLUDGE AND DISPOSE PER NPS DIRECTION. IF LAGOON IS CURRENTLY USED FOR STORAGE CLEAN OUT LAGOON USED AS DRYING BED AND PUMP SOUTHWEST LAGOON EFFLUENT INTO THE NORTHEAST LAGOON.
2. CONTINUE TO DISCHARGE EFFLUENT FROM THE PRIMARY TREATMENT TANK INTO THE EXISTING NORTHEASTERN LAGOON DURING CONSTRUCTION OF PHASE 1.
3. DEMOLISH AND REMOVE EXISTING SOUTHWESTERN LAGOON COMPONENTS AND ISOLATE PIPING CONNECTIONS FROM REST OF SYSTEM; EXCAVATE, BACKFILL, ROUGH GRADE AND PREPARE FOR FURTHER CONSTRUCTION.
4. CONSTRUCT TEMPORARY ALL-WEATHER ACCESS ROAD, 100,000-GALLON STORAGE TANK AND EFFLUENT REMOVAL ACCESS VAULT PER SHEET D1.10, AND ASSOCIATED TANK VAULTS PER SHEET D1.2. INSTALL VALVES AND FLOW METER PER SHEET D1.2.
5. INSTALL SADDLE TAP, 4" DI PIPING AND VALVE COMPONENTS TO TIE INTO EXISTING 4" DISCHARGE PIPING LINE.
6. AFTER 100,000-GALLON STORAGE TANK COMMISSIONING, INSTALL TEMPORARY PUMP AND PIPING TO CONNECT THE EXISTING CHLORINATION TANK DISCHARGE LINE TO SHALLOW TANK VAULT-1 PIPING INTO 100,000-GALLON STORAGE TANK.
7. CONSTRUCT A 4' MANHOLE FOR PHASE 2 AND 3 CONSTRUCTION PER SHEET D1.17.
8. REMOVE EXISTING ABOVE GRADE 6-INCH HDPE SEWER TRANSFER DUMP LINE.
9. INSTALL 6" EMERGENCY DRAIN OUTLET FROM EXISTING WWTP TO 100, 000 GALLON STORAGE TANK THROUGH THE SHALLOW TANK VAULT, PER SHEET D1.4 AND D1.10.
10. PRIOR TO COMMENCEMENT OF PHASE 2 CONSTRUCTION, CLEAN OUT AND DISPOSE CONTENTS OF 100,000 GALLON TANK.
11. TWO VALVES CONTROL DIVERSION BETWEEN BOTH LAGOONS IN DIVERSION BOX. SOUTHWEST LAGOON VALVE IS OPERABLE. NORTH EAST LAGOON VALE IS INOPERABLE.

CONCEPTUAL ONLY

20' 0 20' 40'
SCALE OF FEET

REGISTERED PROFESSIONAL ENGINEER
DAVID BARTON BROOKE
NO. 72417
CIVIL
STATE OF CALIFORNIA
100% DRAFT

DESIGNED: D. BROOKE CADD M. GARCIA TECH. REVIEW: J. BLOM DATE: 04/07/2022	SUB SHEET NO. PH1.1	TITLE OF SHEET CONSTRUCTION PHASE 1 AMWWTP REHABILITATE ASH AND BUCKEYE WASTEWATER TREATMENT PLANTS SEQUOIA & KINGS CANYON NATIONAL PARKS	DRAWING NO. 102 / 177,507 PMIS/PKG NO. 317446 SHEET 10 OF 135

25/04/2022 09:14 MARIO GARCIA G:\CLIENTS\NPS\SEK\317446\DRAWINGS\ASH MOUNTAIN DWGS\2 PROJECT PHASING\10 - CONSTRUCTION PHASE 1 AMWWTP.DWG

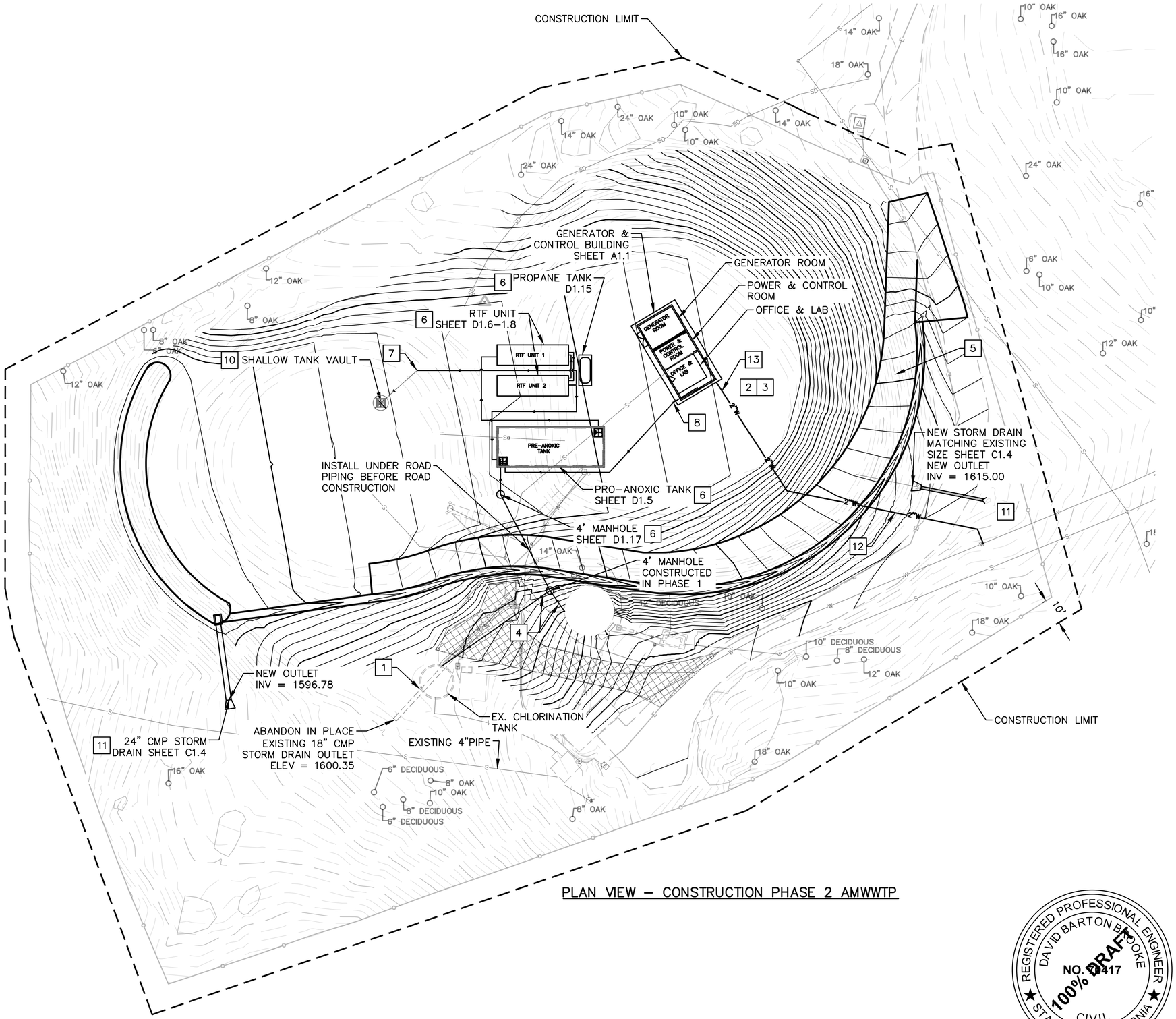

PLAN VIEW – CONSTRUCTION PHASE 2 AMWWTP

NOTES PHASE 2:

1. PHASING SEQUENCES SHOWN ON THIS SHEET ARE CONCEPTUAL ONLY. SEWAGE TREATMENT AND DISPOSAL ARE REQUIRED TO BE KEPT IN OPERATION THROUGHOUT THE DURATION OF ALL CONSTRUCTION ACTIVITIES AT ASH MOUNTAIN. CONTRACTOR CAN PROVIDE ALTERNATE SEQUENCING OR DIFFERENT SEQUENCING THAN WHAT IS PROVIDED ON THIS SHEET DEPENDING ON MEANS AND METHODS AVAILABLE TO THE CONTRACTOR.
2. SLUDGE MANAGEMENT AND DISPOSAL ARE THE RESPONSIBILITY OF THE CONTRACTOR.

KEYNOTES PHASE 2:

1. TRANSFER CHLORINATED EFFLUENT USING TEMPORARY BYPASS PUMPS INTO THE NEW STORAGE TANK FOR STORAGE AND DISCHARGE TO THE SPRAYFIELD. PER SPECIFICATIONS.
2. REMOVE NORTHEASTERN LAGOON FROM OPERATION AND PUMP OUT LAGOON STORAGE INTO 100,000 GALLON STORAGE TANK FOR SPRAYFIELD DISPOSAL.
3. DEMOLISH AND REMOVE EXISTING NORTHEASTERN LAGOON COMPONENTS; EXCAVATE, BACKFILL, ROUGH GRADE AND PREPARE FOR FURTHER CONSTRUCTION. SEE C1.4 FOR DETAILS.
4. INSTALL TEMPORARY DUPLEX PUMPS AND PIPING. CONNECT AERATION TANK OUTLET TO THE 4' MANHOLE CONSTRUCTED IN PHASE 1. TRANSFER TREATED PRIMARY EFFLUENT FROM THE AERATION TANK INTO THE EXISTING CHLORINATION TANK.
5. CONSTRUCT NEW ASPHALT ACCESS ROAD PER SHEET C1.6 AND 1.7 AND SITE GRADING PER SHEET C1.5. INSTALL UNDER ROAD PIPING FIRST.
6. INSTALL NEW SECONDARY TREATMENT SYSTEM INCLUDING PRE–ANOXIC TANK, RTF SYSTEM AND PIPING, PER SHEET D1.7–D1.9; CONSTRUCT THE SECOND 4' MANHOLE PER SHEET D1.17; CONSTRUCT THE NEW CONTROL BUILDING PER SHEET A1.1–1.6; INSTALL PROPANE TANK PER SHEET D1.15.
7. INSTALL NEW 4" RTF DISCHARGE LINE WITH 2" X 4" REDUCER.
8. INSTALL NEW 4" PVC SEWER LINE WITH A CLEANOUT PER SHEET D1.18.
9. STORE EFFLUENT IN 100,000 GALLON TANK DURING CONSTRUCTION IMPROVEMENTS OF SPRAYFIELD PUMP STATION AND SPRAYFIELD.
10. CONNECT RTF DISCHARGE LINE IN THE SHALLOW TANK VAULT. TEST THE SYSTEM PRIOR TO COMMENCING PHASE 3 CONSTRUCTION.
11. REMOVE & REPLACE EXISTING 18" CMP STORM DRAIN. SEE SHEET C1.4 AND D1.14. INSTALL STORM DRAIN IMPROVEMENTS PER SHEET D1.14.
12. INSTALL 2" WATERLINE.
13. INSTALL BACKFLOW PREVENTER & HOSE BIB PER SHEET D1.13.
14. PHASE 4 CONSTRUCTION CAN BE IMPLEMENTED DURING EITHER PHASE 1, PHASE 2, OR PHASE 3 CONSTRUCTION.

CONCEPTUAL ONLY

20' 0 20' 40'
SCALE OF FEET

REGISTERED PROFESSIONAL ENGINEER
DAVID BARTON BROOKE
NO. 77417
CIVIL
STATE OF CALIFORNIA
100% DRAFT

DESIGNED: D. BROOKE CADD: M. GARCIA TECH. REVIEW: J. BLOM DATE: 04/07/2022	SUB SHEET NO. PH1.2	TITLE OF SHEET CONSTRUCTION PHASE 2 AMWWTP REHABILITATE ASH AND BUCKEYE WASTEWATER TREATMENT PLANTS SEQUOIA & KINGS CANYON NATIONAL PARKS	DRAWING NO. 102 / 177,507 PMIS/PKG NO. 317446 SHEET 11 OF 135

06/06/2022 13:15 MARIO GARCIA G:\CLIENTS\NPS\SEKI\317446\DRAWINGS\ASH MOUNTAIN DWGS\-PROJECT PHASING\11 - CONSTRUCTION PHASE 2 AMWWTP.DWG

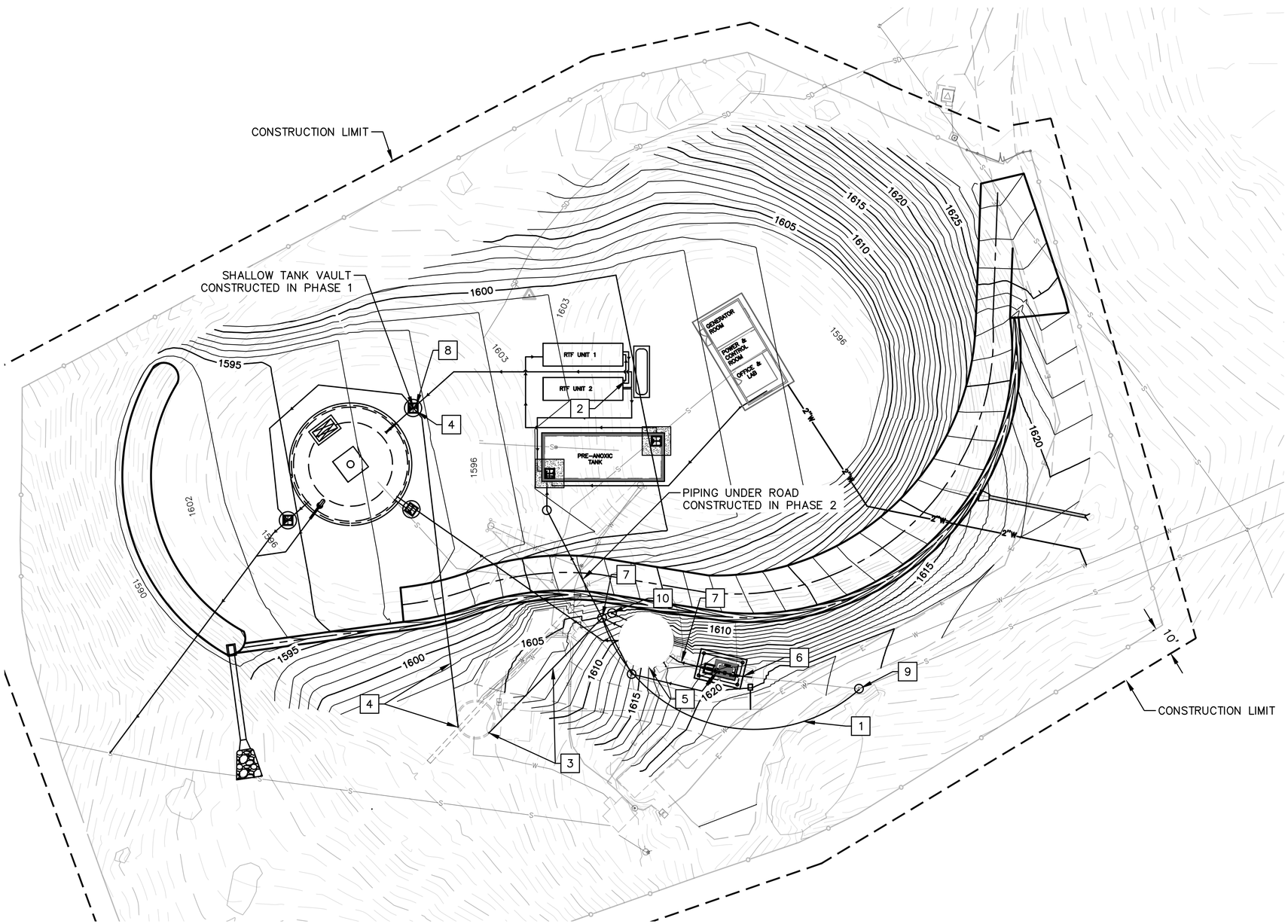

PLAN VIEW – CONSTRUCTION PHASE 3 AMWWTP

NOTES PHASE 3:

1. PHASING SEQUENCES SHOWN ON THIS SHEET ARE CONCEPTUAL ONLY. SEWAGE TREATMENT AND DISPOSAL ARE REQUIRED TO BE KEPT IN OPERATION THROUGHOUT THE DURATION OF ALL CONSTRUCTION ACTIVITIES AT ASH MOUNTAIN. CONTRACTOR CAN PROVIDE ALTERNATE SEQUENCING OR DIFFERENT SEQUENCING THAN WHAT IS PROVIDED ON THIS SHEET DEPENDING ON MEANS AND METHODS AVAILABLE TO THE CONTRACTOR.
2. SLUDGE MANAGEMENT AND DISPOSAL ARE THE RESPONSIBILITY OF THE CONTRACTOR.

KEYNOTES PHASE 3:

1. INSTALL BYPASS PIPING FROM SEWER MAIN TO 4' MANHOLE CONSTRUCTED IN PHASE 1 AND DESIGNATED UNDER KEYNOTE 7.
2. INCREASE THE RE-CIRCULATION CYCLES OF THE SECONDARY TREATMENT SYSTEM TO MEET THE TREATED EFFLUENT DISCHARGE REQUIREMENT.
3. DEMOLISH THE CHLORINATION TANK AND PIPING. CAP THE CORRESPONDING HOLE IN MANHOLE.
4. REMOVE TEMPORARY BYPASS LINE INCLUDING PUMPS, 4" PVC AND PLUG VALVE IN THE SHALLOW TANK VAULT CONSTRUCTED IN PHASE 1. INSTALL 4" BLIND FLANGE ON CROSS AFTER REMOVING PLUG VALVE.
5. RECONFIGURE THE EXISTING AERATION TANK PER SHEET D1.4. CONNECT THE NEW SEPTIC TANK OUTLET TO 4' MANHOLE DESIGNATED UNDER KEYNOTE 7.
6. REMOVE AND REPLACE THE EXISTING HEADWORKS PER SHEET D1.3.
7. DEMOLISH THE HEADWORKS BYPASSING PIPING. CONNECT THE PIPING FROM NEW HEADWORKS TO THE NEW SEPTIC TANK, AND FROM NEW SEPTIC TANK TO THE 4' PRECAST MANHOLE.
8. REPLACE THE PLUG VALVE ON RTF EFFLUENT LINE WITH A 4" ULTRA MAG FLOW METER (UM06). SEE D1.2 FOR DETAILS.
9. REMOVE EXISTING MANHOLE AND CONSTRUCT NEW 4' MANHOLE. SEE D1.16 FOR DETAILS.
10. INSTALL SLUDGE REMOVAL MANHOLE PER DETAIL SHEET D1.19.
11. KEEP THE 100,000-GALLON STORAGE TANK ON STANDBY READY FOR WET WEATHER EVENT STORAGE.
12. COMMISSION THE NEW COMPLETE SYSTEM.
13. PHASE 4 CONSTRUCTION CAN BE IMPLEMENTED DURING EITHER PHASE 1, PHASE 2, OR PHASE 3 CONSTRUCTION.

CONCEPTUAL ONLY

20' 0 20' 40'
SCALE OF FEET

REGISTERED PROFESSIONAL ENGINEER
DAVID BARTON BROOKE
NO. 70417
CIVIL
STATE OF CALIFORNIA
100% DRAFT

DESIGNED: D. BROOKE CADD M. GARCIA TECH. REVIEW: J. BLOM DATE: 04/07/2022	SUB SHEET NO. PH1.3	TITLE OF SHEET CONSTRUCTION PHASE 3 AMWWTP REHABILITATE ASH AND BUCKEYE WASTEWATER TREATMENT PLANTS SEQUOIA & KINGS CANYON NATIONAL PARKS	DRAWING NO. 102 / 177,507 PMIS/PKG NO. 317446 SHEET 12 OF 135

26/04/2022 12:50 MARIO GARCIA G:\CLIENTS\NPS\SEKI\317446\DRAWINGS\ASH MOUNTAIN DWGS\2 PROJECT PHASING\12 - CONSTRUCTION PHASE 3 AMWWTP.DWG

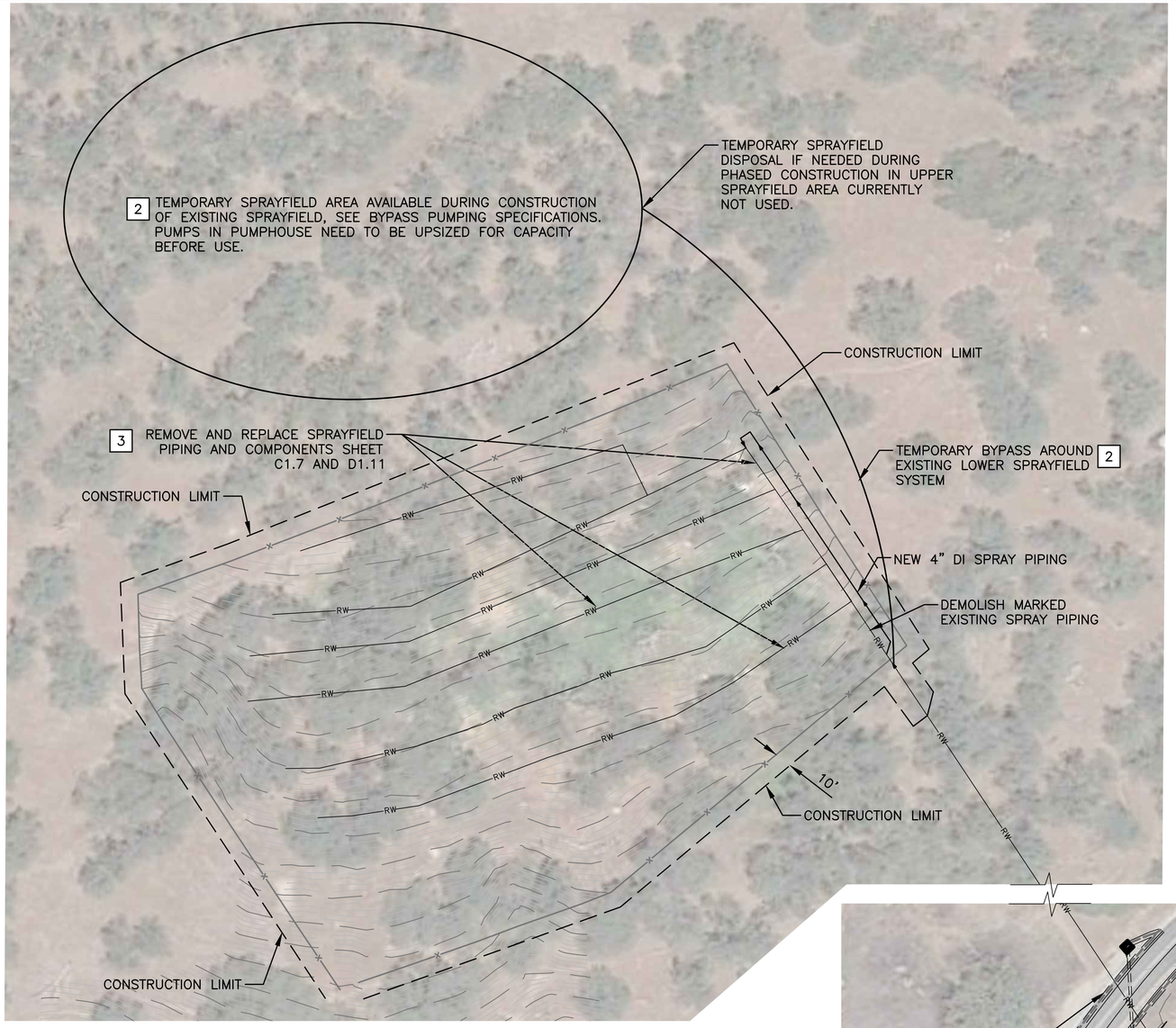

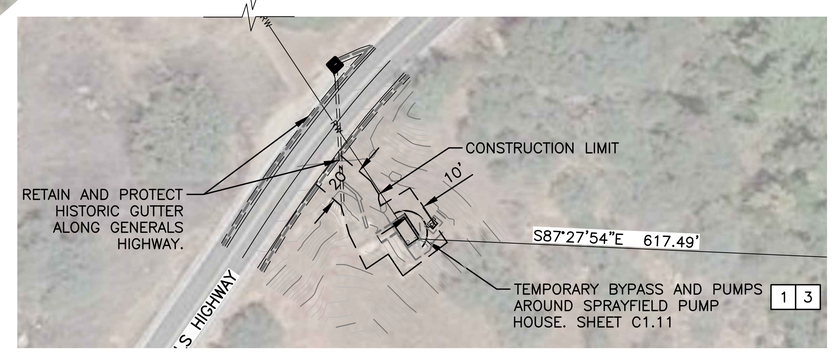

PLAN VIEW – CONSTRUCTION PHASE 4 AMWWTP

NOTES:

1. THE HISTORIC GUTTER ON GENERAL HIGHWAY ADJACENT TO THE PUMP HOUSE SHALL BE PROTECTED IN PLACE DURING CONSTRUCTION.
2. PHASING SEQUENCES SHOWN ON THIS SHEET ARE CONCEPTUAL ONLY. SEWAGE TREATMENT AND DISPOSAL ARE REQUIRED TO BE KEPT IN OPERATION THROUGHOUT THE DURATION OF ALL CONSTRUCTION ACTIVITIES AT ASH MOUNTAIN. CONTRACTOR CAN PROVIDE ALTERNATE SEQUENCING OR DIFFERENT SEQUENCING THAN WHAT IS PROVIDED ON THIS SHEET DEPENDING ON MEANS AND METHODS AVAILABLE TO THE CONTRACTOR.
3. SLUDGE MANAGEMENT AND DISPOSAL ARE THE RESPONSIBILITY OF THE CONTRACTOR.

KEYNOTES PHASE 4:

1. BYPASS SPRAYFIELD PUMPHOUSE DURING PUMPHOUSE REHABILITATION.
2. BYPASS SPRAYFIELD DURING SPRAYFIELD REHABILITATION.
3. CONSTRUCT NEW SPRAYFIELD, AND PUMP STATION REHABILITATION.
4. PHASE 4 CAN BE IMPLEMENTED DURING EITHER PHASE 1, PHASE 2, OR PHASE 3 CONSTRUCTION.
5. REMOVE TEMPORARY BYPASS PUMPS AND SPRAYFIELD PIPING COMPONENTS AFTER COMPLETION OF WORK.
6. RETAIN AND PROTECT HISTORIC GUTTER ALONG GENERALS HIGHWAY.

CONCEPTUAL ONLY

40' 0 40' 80'
SCALE OF FEET

REGISTERED PROFESSIONAL ENGINEER
DAVID BARTON BROOKE
NO. 72417
CIVIL
STATE OF CALIFORNIA
100% DRAFT

DESIGNED: D. BROOKE CADD: M. GARCIA TECH. REVIEW: J. BLOM DATE: 04/07/2022	SUB SHEET NO. PH1.4	TITLE OF SHEET CONSTRUCTION PHASE 4 AMWWTP REHABILITATE ASH AND BUCKEYE WASTEWATER TREATMENT PLANTS SEQUOIA & KINGS CANYON NATIONAL PARKS	DRAWING NO. 102 / 177,507 PMIS/PKG NO. 317446 SHEET 13 OF 135

20/04/2022 10:59 MARIO GARCIA G:\CLIENTS\NPS\SEKI\317446\DRAWINGS\ASH MOUNTAIN DWGS_PROJECT PHASING\13 - CONSTRUCTION PHASE 4 AMWWTP.DWG

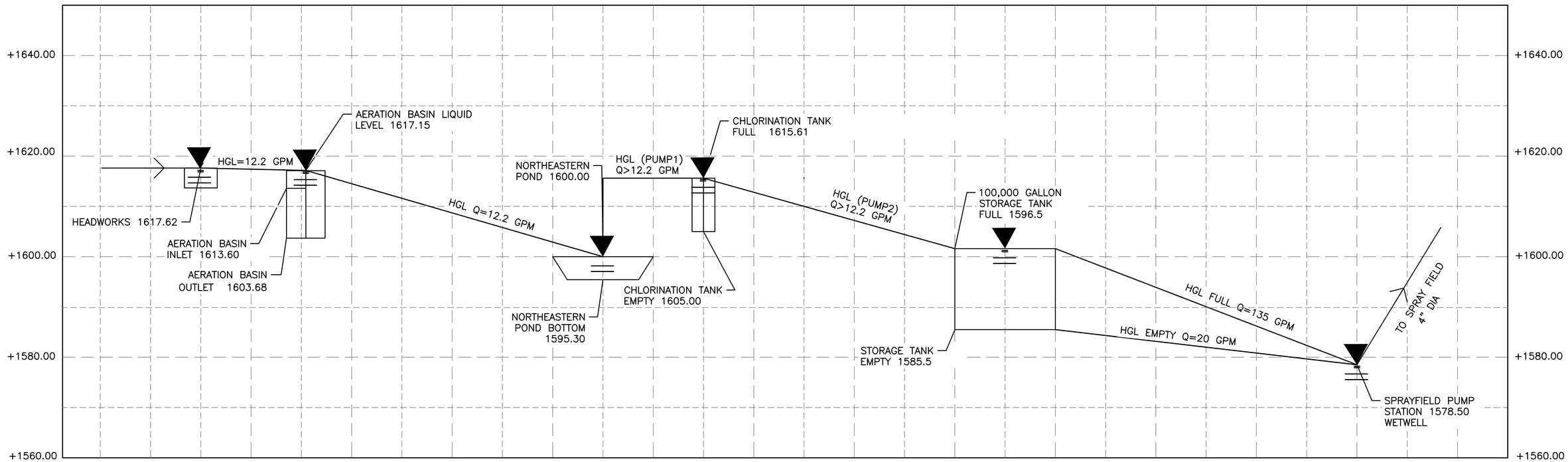

PROFILE VIEW – HYDRAULIC PROFILE PHASE 1 AMWWTP
SCALE: NTS

REGISTERED PROFESSIONAL ENGINEER
DAVID BARTON BROOKE
NO. 72417
CIVIL
STATE OF CALIFORNIA
100% DRAFT

DESIGNED: D. BROOKE CADD M. GARCIA TECH. REVIEW: J. BLOM DATE: 04/07/2022	SUB SHEET NO. HP1.1	TITLE OF SHEET HYDRAULIC PROFILE PHASE 1 AMWWTP REHABILITATE ASH AND BUCKEYE WASTEWATER TREATMENT PLANTS SEQUOIA & KINGS CANYON NATIONAL PARKS	DRAWING NO. 102 / 177,507 PMIS/PKG NO. 317446 SHEET 14 OF 135

22/04/2022 12:02 MARIO GARCIA G:\CLIENTS\NPS\SEK\317446\DRAWINGS\ASH MOUNTAIN DWGS\3_HYDRAULIC PROFILE\14 - HYDRAULIC PROFILE PHASE 1 AMWWTP.DWG

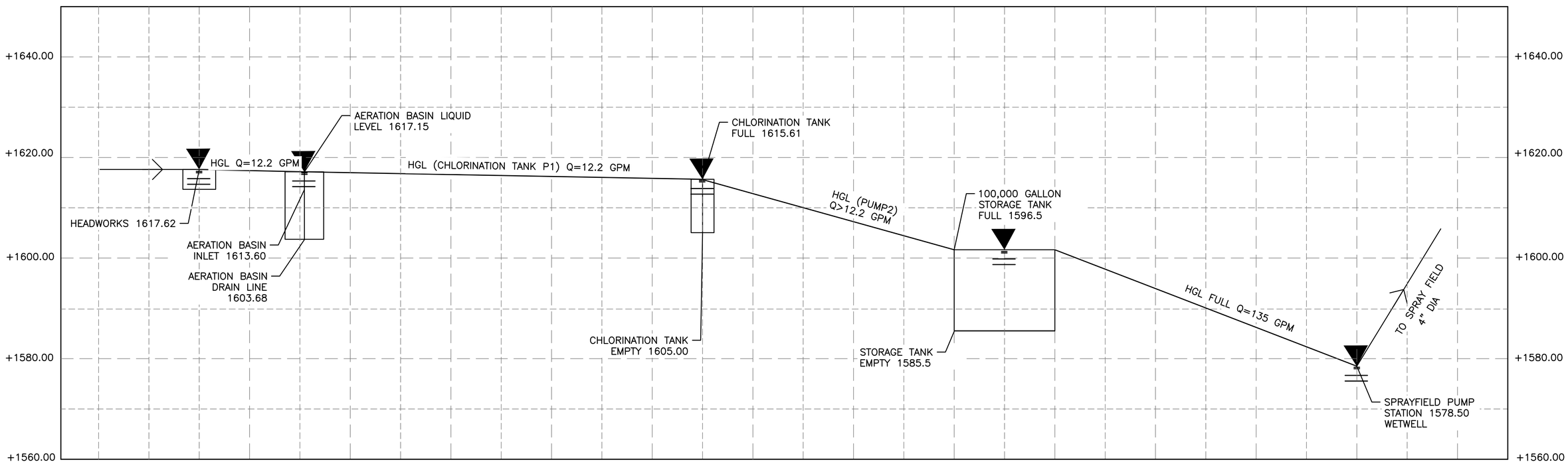

PROFILE VIEW – HYDRAULIC PROFILE PHASE 2 AMWWTP
SCALE: NTS

REGISTERED PROFESSIONAL ENGINEER
DAVID BARTON BROOKE
NO. 72417
CIVIL
STATE OF CALIFORNIA
100% DRAFT

DESIGNED: D. BROOKE CADD M. GARCIA TECH. REVIEW: J. BLOM DATE: 04/07/2022	SUB SHEET NO. HP1.2	TITLE OF SHEET HYDRAULIC PROFILE PHASE 2 AMWWTP REHABILITATE ASH AND BUCKEYE WASTEWATER TREATMENT PLANTS SEQUOIA & KINGS CANYON NATIONAL PARKS	DRAWING NO. 102 / 177,507 PMIS/PKG NO. 317446 SHEET 15 OF 135

22/04/2022 12:03 MARIO GARCIA G:\CLIENTS\NPS\SEK\317446\DRAWINGS\ASH MOUNTAIN DWGS\3_HYDRAULIC PROFILE\15 – HYDRAULIC PROFILE PHASE 2 AMWWTP.DWG

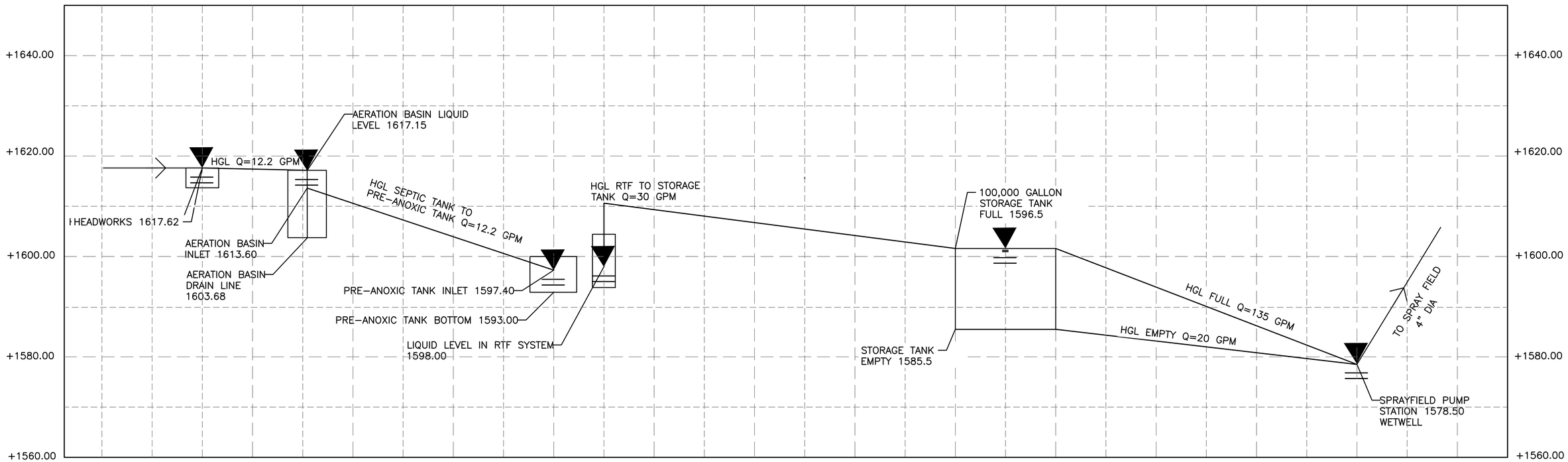

PROFILE VIEW – HYDRAULIC PROFILE PHASE 3 AMWWTP
SCALE: NTS

REGISTERED PROFESSIONAL ENGINEER
DAVID BARTON BROOKE
NO. 70417
CIVIL
STATE OF CALIFORNIA
100% DRAFT

DESIGNED: D. BROOKE CADD M. GARCIA TECH. REVIEW: J. BLOM DATE: 04/07/2022	SUB SHEET NO. HP1.3	TITLE OF SHEET HYDRAULIC PROFILE PHASE 3 AMWWTP REHABILITATE ASH AND BUCKEYE WASTEWATER TREATMENT PLANTS SEQUOIA & KINGS CANYON NATIONAL PARKS	DRAWING NO. 102 / 177,507 PMIS/PKG NO. 317446 SHEET 16 OF 135

22/04/2022 12:10 MARIO GARCIA G:\CLIENTS\NPS\SEK\317446\DRAWINGS\ASH MOUNTAIN DWGS\3_HYDRAULIC PROFILE\16 – HYDRAULIC PROFILE PHASE 3 AMWWTP.DWG

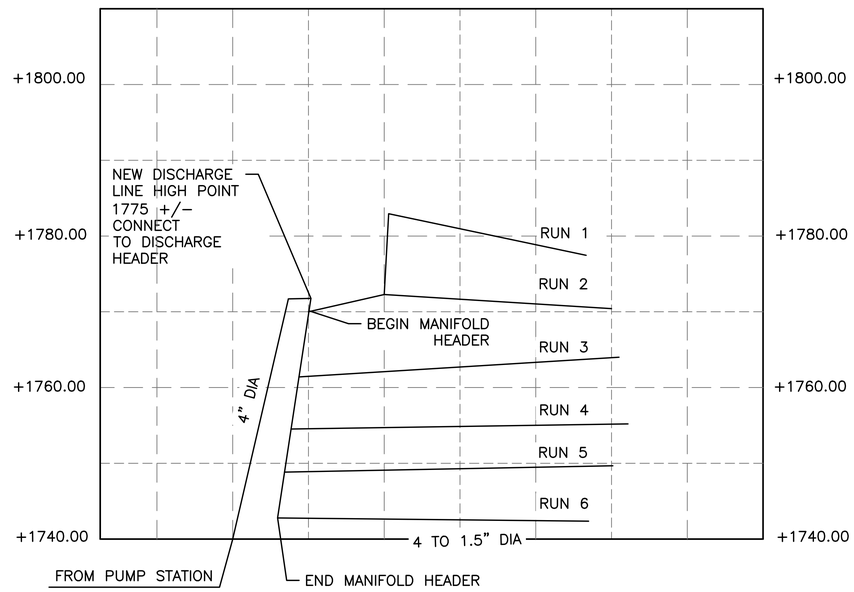

PROFILE VIEW – PHASE 4 HYDRAULIC FLOW PROFILE
SCALE; NTS

REGISTERED PROFESSIONAL ENGINEER
DAVID BARTON BROOKE
NO. 70417
100% DRAFT
CIVIL
STATE OF CALIFORNIA

DESIGNED: D. BROOKE DRAWN: M. GARCIA TECH. REVIEW: J. BLOM DATE: 04/07/2022	SUB SHEET NO. HP1.4	TITLE OF SHEET HYDRAULIC PROFILE PHASE 3 AMWWTP REHABILITATE ASH AND BUCKEYE WASTEWATER TREATMENT PLANTS SEQUOIA & KINGS CANYON NATIONAL PARKS	DRAWING NO. 102 / 177,507 PMIS/PKG NO. 317446 SHEET 17 OF 135

18/04/2022 07:59 MARIO GARCIA G:\CLIENTS\NPS\SEK1\317446\DRAWINGS\ASH MOUNTAIN DWGS\3_HYDRAULIC PROFILE\17 – PHASE 4 HYDRAULIC PROFILE .DWG

AMWWTP DAILY PRIMARY TREATMENT / EQUALIZATION TANK PARAMETERS			
ASH MOUNTAIN WWTP RAW INFLUENT FLOWS (RECORDED 2014-2019)			
6-YEAR AVERAGE	MAX PEAK DAY MONTHLY AVE GPD	MIN DAY MONTHLY AVE GPD	AVE DAY MONTHLY MEAN GPD
JANUARY	18,000	2,000	8,221
FEBRUARY	25,500	4,000	8,234
MARCH	17,500	3,167	6,943
APRIL	12,667	3,333	6,356
MAY	12,667	4,000	7,376
JUNE	24,000	4,000	7,978
JULY	16,000	4,000	8,387
AUGUST	12,667	3,333	7,419
SEPTEMBER	15,333	4,667	7,355
OCTOBER	12,000	3,333	6,937
NOVEMBER	10,667	3,000	5,689
DECEMBER	11,333	2,167	5,498

AMWWTP PRIMARY TREATMENT PARAMETERS	
WASTE DISCHARGE PERMIT FLOWS VS DESIGN MAXIMUM DAY FLOW	
WASTE DISCHARGE PERMIT FLOWS	
DESCRIPTION	2014 THRU 2019 AVE VOLUME (GPD)
CURRENT WASTE DISCHARGE PERMIT DESIGN FLOW	17,500
CURRENT WASTE DISCHARGE PERMIT AVERAGE DRY WEATHER FLOW	9,000
CURRENT WASTE DISCHARGE PERMIT AVERAGE WET WEATHER FLOW	6,400
WASTE DISCHARGE PERMIT FLOWS	
AVERAGE PEAK DAY MONTHLY FLOW	15,694
DESIGN MAXIMUM DAY FLOW	17,500

AMWWTP PRIMARY TREATMENT PARAMETERS	
EXTENDED AERATION BASIN CONVERSION TO A PRIMARY TREATMENT AND EQUALIZATION TANK SYSTEM - PREANOXIC TRANSITION TREATMENT	
PRIMARY TREATMENT AND EQUALIZATION TANK	19,000 GALLONS
TRANSITION TREATMENT AND EQUALIZATION TANK (PREANOXIC TANK)	17,400 GALLONS

DESIGN CRITERIA – PRIMARY/EQUALIZATION TANK & PREANOXIC/TRANSITION TREATMENT (AMWWTP)

REGISTERED PROFESSIONAL ENGINEER
DAVID BARTON BROOKE
NO. 70417
100% DRAFT
CIVIL
STATE OF CALIFORNIA

DESIGNED: D. BROOKE DRAWN: M. GARCIA TECH. REVIEW: J. BLOM DATE: 04/07/2022	SUB SHEET NO. DC1.1	TITLE OF SHEET DESIGN CRITERIA (AMWWTP) REHABILITATE ASH AND BUCKEYE WASTEWATER TREATMENT PLANTS SEQUOIA & KINGS CANYON NATIONAL PARKS	DRAWING NO. 102 / 177,507 PMIS/PKG NO. 317446 SHEET 18 OF 135

18/04/2022 10:01 MARIO GARCIA G:\CLIENTS\NPS\SEKI\317446\DRAWINGS\ASH MOUNTAIN DWGS\4 CIVIL SHEETS\18 – DESIGN CRITERIA PRIMARY TREATMENT (AMWWTP).DWG

ASH MOUNTAIN SECONDARY TREATMENT PARAMETERS

ASH MOUNTAIN PROPRIETARY RECIRCULATING TEXTILE FILTER SYSTEM[2]

EMPIRICAL WASTEWATER EFFLUENT FLOW RATES[1]

EMPIRICAL HYDRAULIC PARAMETER	AVERAGE DAY (GPD)	AVERAGE MAXIMUM DAY (GPD)	MINIMUM RECORDED WINTER DAY (GPD)
WASTEWATER PRODUCTION AT ASH MOUNTAIN	8,820	15,694	7,121

WASTEWATER EFFLUENT DESIGN CHARACTERISITCS[1]

DESIGN PARAMETER	DESIGN FLOW (GPD)	CONCENTRATION (MG/L)	PRIMARY TREATED LOAD (LBS./DAY)
BIOCHEMICAL OXYGEN DEMAND (BOD)	17,500	200	29.04
TOTAL SUSPENDED SOLIDS (TSS)	17,500	200	29.04
TOTAL NITROGEN (TN)[4]	NA	NA	NA

TREATMENT WASTEWATER EFFLUENT DESIGN LIMITS[1, 2]

CONSTITUENT OR PARAMETER	EFFLUENT AVERAGE CONCENTRATION (MG/L)
CARBONACEOUS BOD_5 DEMAND ($CBOD_5$)	10[2]
TOTAL SUSPENDED SOLIDS (TSS)	10[2]
TOTAL INORGANIC NITROGEN (TN)	50% REDUCTION [2,3]

SPRAY FIELD DESIGN LOADING RATES[2]

TREATMENT CONSTITUENT OR PARAMETER	UNIT SIZE DESIGN MAXIMUM (SQ.FT.)	DESIGN AVERAGE DAY (8,820 GPD)	DESIGN MAXIMUM DAY (17,400 GPD)
HYDRAULIC	348	25 GPD/SQ.FT.	50 GPD/SQ.FT.
BOD_5	363	0.040 LBS/SQ.FT./DAY	0.080 LBS/SQ.FT./DAY
TSS	363	0.040 LBS/SQ.FT./DAY	0.080 LBS/SQ.FT./DAY
TKN[4]	NA	NA	NA

1 REFERENCE: NPS, HECO ENGINEERS
2 REFERENCE: ORENCO SYSTEMS®
3 ASSUMES ADEQUATE WATER TEMPERATURE AND ALKALINITY EXISTS
4 TKN – NOT APPLICABLE (BASED ON THE FLOWS A NITROGEN LIMIT IS NOT REQUIRED UNDER THE GENERAL ORDER.)

AMWWTP SPRAYFIELD PUMP HYDRAULICS

New Grundfos 40-HP System Curve
Model - CRN 64-4-2 H-G44-A-E-HQQE

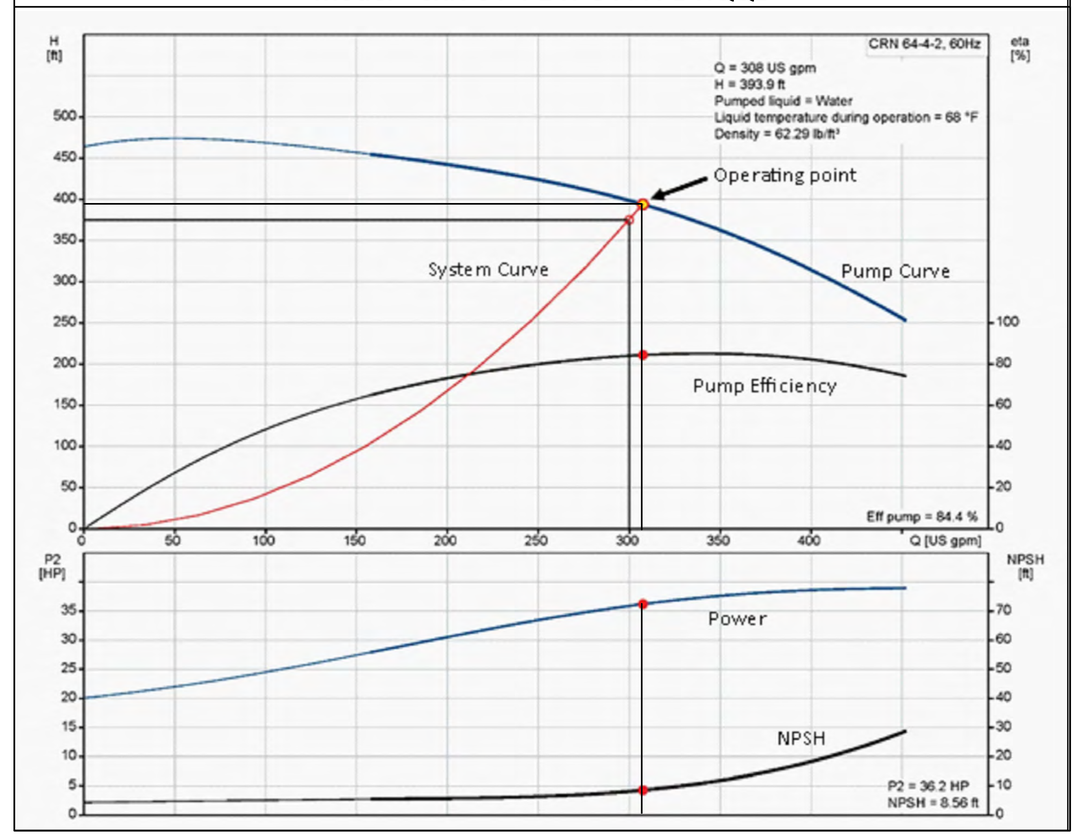

AMWWTP SECONDARY TREATMENT PARAMETERS

ASH MOUNTAIN ORENCO SYSTEMS® AX-MAX EQUIPMENT SELECTION*

FIRST STAGE TREATMENT UNIT(S):	(1) AX-MAX200-28, AX-MAX175-28
FIRST STAGE PUMPING SETUP:	(2) DUPLEX PF7510
FIRST STAGE TREATMENT VOLUME:	11,616 GALLONS REQUIRED - 19,000 GALLONS AVAILABLE

* REFERENCE: ORENCO SYSTEMS®

DESIGN CRITERIA – SECONDARY TREATMENT & SPRAYFIELD PUMPS (AMWWTP)

REGISTERED PROFESSIONAL ENGINEER
DAVID BARTON BROOKE
NO. 72417
100% DRAFT
CIVIL
STATE OF CALIFORNIA

DESIGNED: D. BROOKE	SUB SHEET NO.	TITLE OF SHEET	DRAWING NO.
CADD M. GARCIA	DC1.2	DESIGN CRITERIA (AMWWTP)	102 / 177,507
TECH. REVIEW: J. BLOM		REHABILITATE ASH AND BUCKEYE WASTEWATER TREATMENT PLANTS SEQUOIA & KINGS CANYON NATIONAL PARKS	PMIS/PKG NO. 317446
DATE: 04/07/2022			SHEET 19 OF 135

21/04/2022 12:11 MARIO GARCIA G:\CLIENTS\NPS\SFA\317446\DRAWINGS\ASH MOUNTAIN DWGS\4 CIVIL SHEETS\19 - SECONDARY TREATMENT (ASH MTN).DWG

AMWWTP SPRAYFIELD DISPOSAL HYDRAULICS

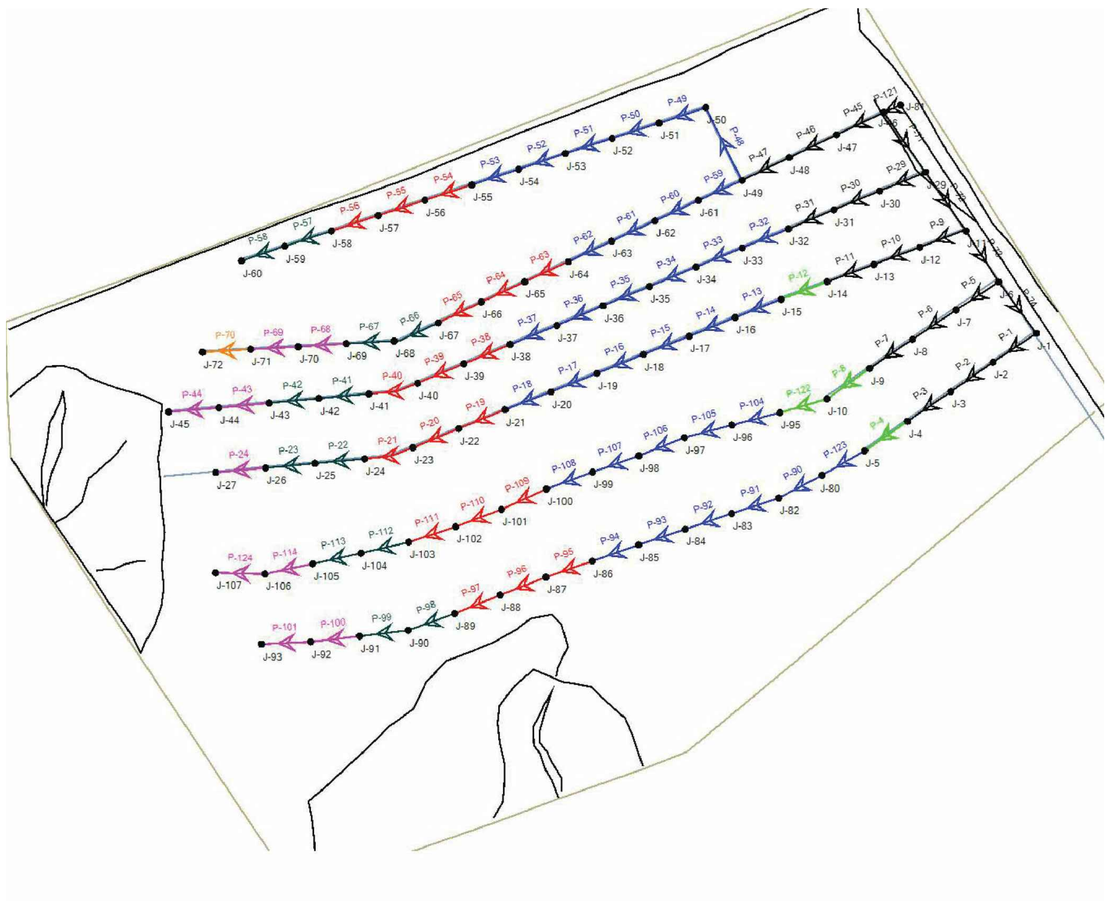

AMWWTP SPRAYFIELD DISPOSAL HYDRAULICS

Pipe Label	Length (Scaled) (ft)	Junction Start Node	Junction Stop Node	Diameter (in.)	Material	Pipe Flow (gpm)	Velocity (ft/s)	Start Node Emitter Coefficient (gpm/psi^n	Node Demand (gpm)
Force main to Spray Field									
P-84	665.6	J-79	J-81	4	PVC	308.24	7.87	0	0
P-121	7.5	J-81	J-46	4	PVC	308.24	7.87	0	0
Irrigation Header Pipe									
P-71	29.6	J-46	J-29	4	PVC	232.23	5.93	0	0
P-72	29	J-29	J-11	4	PVC	180.55	4.61	0	0
P-73	24.7	J-11	J-6	4	Steel	125.71	3.21	0	0
P-74	25.9	J-6	J-1	4	Steel	64.14	1.64	0	0
Laterial #1									
P-45	21.3	J-46	J-47	4	Steel	76.01	1.94	0	0
P-46	21.3	J-47	J-48	4	Steel	72.88	1.86	0.68	3.13
P-47	21.3	J-48	J-49	4	Steel	69.76	1.78	0.68	3.13
Lateral #1A									
P-48	33.1	J-49	J-50	2	Steel	30.25	3.09	0.68	3.11
P-49	20	J-50	J-51	2	Steel	27.53	2.81	0.68	2.72
P-50	20.1	J-51	J-52	2	Steel	24.82	2.53	0.68	2.71
P-51	20	J-52	J-53	2	Steel	22.1	2.26	0.68	2.72
P-52	20	J-53	J-54	2	Steel	19.39	1.98	0.68	2.71
P-53	20.1	J-54	J-55	2	Steel	16.67	1.7	0.68	2.72
P-54	20	J-55	J-56	1.5	Steel	13.96	2.53	0.68	2.72
P-55	20	J-56	J-57	1.5	Steel	11.22	2.04	0.68	2.74
P-56	20	J-57	J-58	1.5	Steel	8.46	1.54	0.68	2.76
P-57	20	J-58	J-59	1.25	Steel	5.66	1.48	0.68	2.8
P-58	18.5	J-59	J-60	1.25	Steel	2.84	0.74	0.68	2.82
		J60						0.68	2.84
Lateral #1B									
P-59	19.5	J-49	J-61	2	Steel	36.4	3.72	0.68	3.11
P-60	19.5	J-61	J-62	2	Steel	33.3	3.4	0.68	3.1
P-61	19.5	J-62	J-63	2	Steel	30.18	3.08	0.68	3.12
P-62	19.5	J-63	J-64	2	Steel	27.06	2.76	0.68	3.12
P-63	19.5	J-64	J-65	1.5	Steel	23.95	4.35	0.68	3.11
P-64	19.5	J-65	J-66	1.5	Steel	20.87	3.79	0.68	3.07
P-65	19.5	J-66	J-67	1.5	Steel	17.81	3.23	0.68	3.06
P-66	19.5	J-67	J-68	1.25	Steel	14.74	3.85	0.68	3.08
P-67	19.6	J-68	J-69	1.25	Steel	11.66	3.05	0.68	3.07
P-68	19.5	J-69	J-70	1	Steel	8.68	3.55	0.68	2.98
P-69	19.4	J-70	J-71	1	Steel	5.77	2.36	0.68	2.91
P-70	19.6	J-71	J-72	0.75	Steel	2.88	2.09	0.68	2.89
		J-72						0.68	2.88

DESIGN CRITERIA – SPRAYFIELD SYSTEM HYDRAULICS (AMWWTP)

REGISTERED PROFESSIONAL ENGINEER
DAVID BARTON BROOKE
NO. 70417
CIVIL
STATE OF CALIFORNIA
100% DRAFT

DESIGNED: D. BROOKE DRAWN: M. GARCIA TECH. REVIEW: J. BLOM DATE: 04/07/2022	SUB SHEET NO. DC1.3	TITLE OF SHEET DESIGN CRITERIA SPRAYFIELD (AMWWTP) REHABILITATE ASH AND BUCKEYE WASTEWATER TREATMENT PLANTS SEQUOIA & KINGS CANYON NATIONAL PARKS	DRAWING NO. 102 / 177,507 PMIS/PKG NO. 317446 SHEET 20 OF 135

18/04/2022 10:07 MARIO GARCIA C:\CLIENTS\NPS\SEKI\317446\DRAWINGS\ASH MOUNTAIN DWGS\4 CIVIL SHEETS\20 – DESIGN CRITERIA SPRAYFIELD (AMWWTP).DWG

AMWWTP SPRAYFIELD DISPOSAL HYDRAULICS

Pipe Label	Length (Scaled) (ft)	Junction Start Node	Junction Stop Node	Diameter (in.)	Material	Pipe Flow (gpm)	Velocity (ft/s)	Start Node Emitter Coefficient (gpm/psi^n	Node Demand (gpm)
Lateral #2									
P-29	20.1	J-29	J-30	4	Steel	51.68	1.32	0	0
P-30	20.2	J-30	J-31	4	Steel	48.3	1.23	0.68	3.38
P-31	20	J-31	J-32	4	Steel	44.94	1.15	0.68	3.36
P-32	20.4	J-32	J-33	2	Steel	41.58	4.25	0.68	3.36
P-33	20.4	J-33	J-34	2	Steel	38.26	3.91	0.68	3.32
P-34	20.5	J-34	J-35	2	Steel	34.97	3.57	0.68	3.29
P-35	20.4	J-35	J-36	2	Steel	31.69	3.24	0.68	3.28
P-36	20.5	J-36	J-37	2	Steel	28.42	2.9	0.68	3.27
P-37	20.5	J-37	J-38	2	Steel	25.16	2.57	0.68	3.26
P-38	20.4	J-38	J-39	1.5	Steel	21.91	3.98	0.68	3.25
P-39	20.4	J-39	J-40	1.5	Steel	18.68	3.39	0.68	3.23
P-40	20.4	J-40	J-41	1.5	Steel	15.46	2.81	0.68	3.23
P-41	20.5	J-41	J-42	1.25	Steel	12.28	3.21	0.68	3.18
P-42	20.4	J-42	J-43	1.25	Steel	9.19	2.4	0.68	3.09
P-43	20.5	J-43	J-44	1	Steel	6.13	2.5	0.68	3.06
P-44	20.5	J-44	J-45	1	Steel	3.08	1.26	0.68	3.05
		J-45						0.68	3.08
Lateral # 3									
P-9	20	J-11	J-12	4	Steel	54.84	1.4	0	0
P-10	20.1	J-12	J-13	4	Steel	51.26	1.31	0.68	3.58
P-11	20.2	J-13	J-14	4	Steel	47.7	1.22	0.68	3.56
P-12	20.1	J-14	J-15	3	Steel	44.17	2	0.68	3.53
P-13	20.1	J-15	J-16	2	Steel	40.67	4.15	0.68	3.5
P-14	20.1	J-16	J-17	2	Steel	37.21	3.8	0.68	3.46
P-15	20.1	J-17	J-18	2	Steel	33.75	3.45	0.68	3.46
P-16	20.3	J-18	J-19	2	Steel	30.3	3.09	0.68	3.44
P-17	20.2	J-19	J-20	2	Steel	26.87	2.74	0.68	3.43
P-18	20.1	J-20	J-21	2	Steel	23.43	2.39	0.68	3.44
P-19	20.3	J-21	J-22	1.5	Steel	20	3.63	0.68	3.43
P-20	20.2	J-22	J-23	1.5	Steel	16.58	3.01	0.68	3.42
P-21	20.4	J-23	J-24	1.5	Steel	13.18	2.39	0.68	3.4
P-22	20.2	J-24	J-25	1.25	Steel	9.84	2.57	0.68	3.35
P-23	20.2	J-25	J-26	1.25	Steel	6.55	1.71	0.68	3.29
P-24	20.3	J-26	J-27	1	Steel	3.29	1.34	0.68	3.26
		J-27						0.68	3.29

AMWWTP SPRAYFIELD DISPOSAL HYDRAULICS

Pipe Label	Length (Scaled) (ft)	Junction Start Node	Junction Stop Node	Diameter (in.)	Material	Pipe Flow (gpm)	Velocity (ft/s)	Start Node Emitter Coefficient (gpm/psi^n	Node Demand (gpm)
Lateral #4									
P-5	20.7	J-6	J-7	4	Steel	61.57	1.57	0	0
P-6	21.3	J-7	J-8	4	Steel	57.84	1.48	0.68	3.73
P-7	21.1	J-8	J-9	4	Steel	54.1	1.38	0.68	3.73
P-8	21.3	J-9	J-10	3	Steel	50.38	2.29	0.68	3.72
P-122	20	J-10	J-95	3	Steel	46.68	2.12	0.68	3.7
P-104	20	J-95	J-96	2	Steel	42.99	4.39	0.68	3.7
P-105	20	J-96	J-97	2	Steel	39.3	4.01	0.68	3.69
P-106	20	J-97	J-98	2	Steel	35.63	3.64	0.68	3.67
P-107	20	J-98	J-99	2	Steel	31.98	3.27	0.68	3.65
P-108	20	J-99	J-100	2	Steel	28.33	2.89	0.68	3.64
P-109	20	J-100	J-101	1.5	Steel	24.7	4.48	0.68	3.63
P-110	20	J-101	J-102	1.5	Steel	21.1	3.83	0.68	3.6
P-111	20	J-102	J-103	1.5	Steel	17.53	3.18	0.68	3.57
P-112	20	J-103	J-104	1.25	Steel	13.98	3.65	0.68	3.56
P-113	20	J-104	J-105	1.25	Steel	10.46	2.74	0.68	3.51
P-114	20	J-105	J-106	1	Steel	6.97	2.85	0.68	3.5
P-124	20	J-106	J-107	1	Steel	3.49	1.43	0.68	3.47
		J-107						0.68	3.49
Lateral # 5									
P-1	21.1	J-1	J-2	4	Steel	63.78	1.63	0	0
P-2	21.1	J-2	J-3	4	Steel	60.26	1.54	0.68	3.88
P-3	21.3	J-3	J-4	4	Steel	56.39	1.44	0.68	3.88
P-4	21.2	J-4	J-5	3	Steel	52.51	2.38	0.68	3.87
P-123	20	J-5	J-80	2	Steel	48.66	4.97	0.68	3.86
P-90	20	J-80	J-82	2	Steel	44.83	4.58	0.68	3.83
P-91	20	J-82	J-83	2	Steel	40.99	4.19	0.68	3.83
P-92	20	J-83	J-84	2	Steel	37.17	3.8	0.68	3.83
P-93	20	J-84	J-85	2	Steel	33.36	3.41	0.68	3.81
P-94	20	J-85	J-86	2	Steel	29.56	3.02	0.68	3.8
P-95	20	J-86	J-87	1.5	Steel	25.77	4.68	0.68	3.79
P-96	20	J-87	J-88	1.5	Steel	22.02	4	0.68	3.75
P-97	20	J-88	J-89	1.5	Steel	18.3	3.32	0.68	3.71
P-98	20	J-89	J-90	1.25	Steel	14.62	3.82	0.68	3.68
P-99	20	J-90	J-91	1.25	Steel	10.94	2.86	0.68	3.68
P-100	20	J-91	J-92	1	Steel	7.28	2.97	0.68	3.66
P-101	20	J-92	J-93	1	Steel	3.64	1.49	0.68	3.64
		J-93						0.68	3.64

DESIGN CRITERIA – SPRAYFIELD SYSTEM HYDRAULICS (AMWWTP)

REGISTERED PROFESSIONAL ENGINEER
DAVID BARTON BROOKE
NO. 72417
CIVIL
STATE OF CALIFORNIA
100% DRAFT

DESIGNED: D. BROOKE CADD M. GARCIA TECH. REVIEW: J. BLOM DATE: 04/07/2022	SUB SHEET NO. DC1.4	TITLE OF SHEET DESIGN CRITERIA SPRAYFIELD (ASH MTN.) REHABILITATE ASH AND BUCKEYE WASTEWATER TREATMENT PLANTS SEQUOIA & KINGS CANYON NATIONAL PARKS	DRAWING NO. 102 / 177,507 PMIS/PKG NO. 317446 SHEET 21 OF 135

13/04/2022 10:08 MARIO GARCIA G:\CLIENTS\NPS\SEQ\317446\DRAWINGS\ASH MOUNTAIN DWGS\4 CIVIL SHEETS\21 - DESIGN CRITERIA SPRAYFIELD (ASH MTN) DWG

TOPOGRAPHY NOTE

TOPOGRAPHY SHOWN HEREON WAS COLLECTED BY PROVOST AND PRITCHARD CONSULTING DURING A FIELD SURVEY CONDUCTED IN MARCH AND NOVEMBER OF 2020.

BASIS OF BEARING

THE CALIFORNIA COORDINATE SYSTEM OF 1983, ZONE 4, AS ESTABLISHED LOCALLY BY STATIC GPS OBSERVATION.

SITE BENCH MARK

POINT #1 (ALUMINUM DISK MARKED AM-1)

ELEVATION: 1649.30' NAVD88 DATUM
PER STATIC GPS OBSERVATIONS PROCESSED WITH NGS OPUS PROJECTS

CALIFORNIA COORDINATE SYSTEM OF 1983, ZONE 4 COORDINATES:
N: 2061727.59'
E: 6611866.75'

SECONDARY BENCHMARK

POINT #2 (ALUMINUM DISK MARKED AM-2)

ELEVATION: 1603.00' NAVD88 DATUM
PER STATIC GPS OBSERVATIONS PROCESSED WITH NGS OPUS PROJECTS AND RTK GPS OBSERVATIONS

CALIFORNIA COORDINATE SYSTEM OF 1983, ZONE 4 COORDINATES:
N: 2061730.25'
E: 6611526.55'

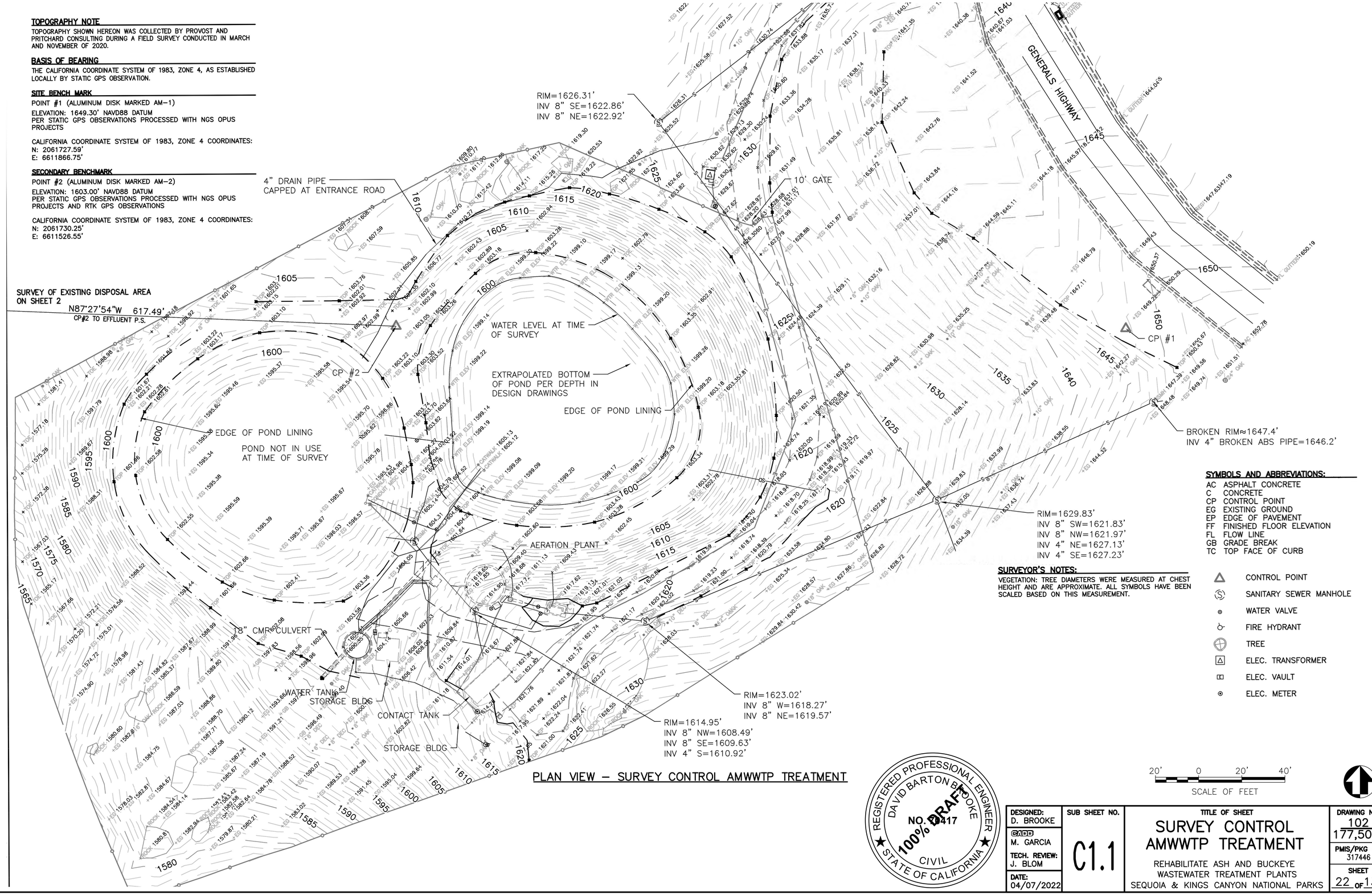

PLAN VIEW – SURVEY CONTROL AMWWTP TREATMENT

SYMBOLS AND ABBREVIATIONS:

AC ASPHALT CONCRETE
C CONCRETE
CP CONTROL POINT
EG EXISTING GROUND
EP EDGE OF PAVEMENT
FF FINISHED FLOOR ELEVATION
FL FLOW LINE
GB GRADE BREAK
TC TOP FACE OF CURB

CONTROL POINT
SANITARY SEWER MANHOLE
WATER VALVE
FIRE HYDRANT
TREE
ELEC. TRANSFORMER
ELEC. VAULT
ELEC. METER

SURVEYOR'S NOTES:

VEGETATION: TREE DIAMETERS WERE MEASURED AT CHEST HEIGHT AND ARE APPROXIMATE. ALL SYMBOLS HAVE BEEN SCALED BASED ON THIS MEASUREMENT.

20' 0 20' 40'
SCALE OF FEET

REGISTERED PROFESSIONAL ENGINEER
DAVID BARTON BROOKE
NO. 72417
CIVIL
STATE OF CALIFORNIA
100% DRAFT

DESIGNED: D. BROOKE CADD: M. GARCIA TECH. REVIEW: J. BLOM DATE: 04/07/2022	SUB SHEET NO. C1.1	TITLE OF SHEET SURVEY CONTROL AMWWTP TREATMENT REHABILITATE ASH AND BUCKEYE WASTEWATER TREATMENT PLANTS SEQUOIA & KINGS CANYON NATIONAL PARKS	DRAWING NO. 102 / 177,507 PMIS/PKG NO. 317446 SHEET 22 OF 135

21/04/2022 16:50 MARIO GARCIA G:\CLIENTS\NPS\SEKI\317446\DRAWINGS\ASH MOUNTAIN DWGS\5_SITE SHEETS\22 - SURVEY CONTROL AMWWTP TREATMENT.DWG

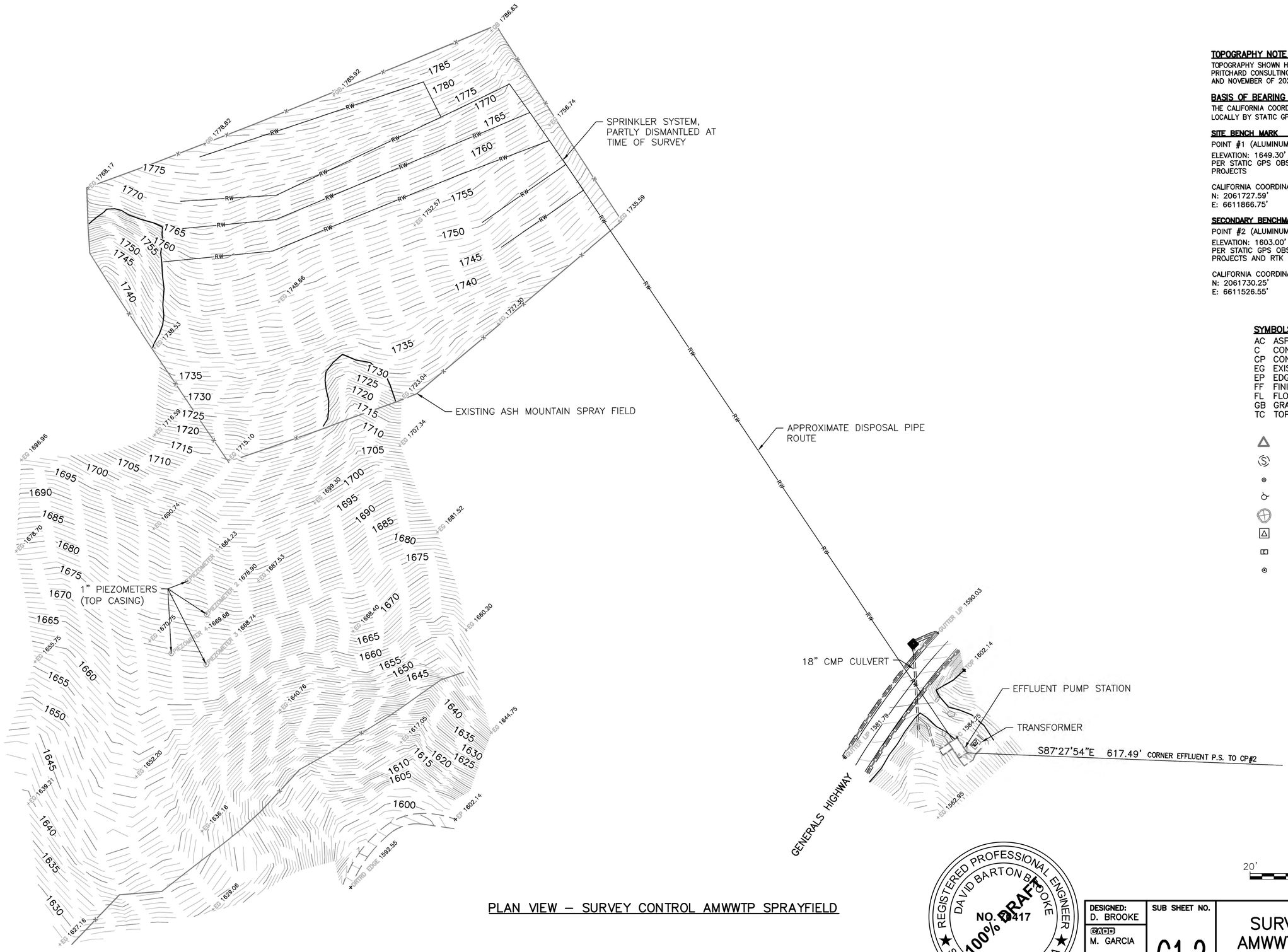

PLAN VIEW – SURVEY CONTROL AMWWTP SPRAYFIELD

TOPOGRAPHY NOTE

TOPOGRAPHY SHOWN HEREON WAS COLLECTED BY PROVOST AND PRITCHARD CONSULTING DURING A FIELD SURVEY CONDUCTED IN MARCH AND NOVEMBER OF 2020.

BASIS OF BEARING

THE CALIFORNIA COORDINATE SYSTEM OF 1983, ZONE 4, AS ESTABLISHED LOCALLY BY STATIC GPS OBSERVATION.

SITE BENCH MARK

POINT #1 (ALUMINUM DISK MARKED AM–1)

ELEVATION: 1649.30' NAVD88 DATUM
PER STATIC GPS OBSERVATIONS PROCESSED WITH NGS OPUS PROJECTS

CALIFORNIA COORDINATE SYSTEM OF 1983, ZONE 4 COORDINATES:
N: 2061727.59'
E: 6611866.75'

SECONDARY BENCHMARK

POINT #2 (ALUMINUM DISK MARKED AM–2)

ELEVATION: 1603.00' NAVD88 DATUM
PER STATIC GPS OBSERVATIONS PROCESSED WITH NGS OPUS PROJECTS AND RTK GPS OBSERVATIONS

CALIFORNIA COORDINATE SYSTEM OF 1983, ZONE 4 COORDINATES:
N: 2061730.25'
E: 6611526.55'

SYMBOLS AND ABBREVIATIONS:

AC ASPHALT CONCRETE
C CONCRETE
CP CONTROL POINT
EG EXISTING GROUND
EP EDGE OF PAVEMENT
FF FINISHED FLOOR ELEVATION
FL FLOW LINE
GB GRADE BREAK
TC TOP FACE OF CURB

CONTROL POINT
SANITARY SEWER MANHOLE
WATER VALVE
FIRE HYDRANT
TREE
ELEC. TRANSFORMER
ELEC. VAULT
ELEC. METER

REGISTERED PROFESSIONAL ENGINEER
DAVID BARTON BROOKE
NO. 77417
CIVIL
STATE OF CALIFORNIA
DRAFT
100%

20' 0 20' 40'
SCALE OF FEET

DESIGNED: D. BROOKE	SUB SHEET NO.	TITLE OF SHEET	DRAWING NO.
CADD M. GARCIA	C1.2	SURVEY CONTROL AMWWTP SPRAYFIELD	102 / 177,507
TECH. REVIEW: J. BLOM		REHABILITATE ASH AND BUCKEYE WASTEWATER TREATMENT PLANTS SEQUOIA & KINGS CANYON NATIONAL PARKS	PMIS/PKG NO. 317446
DATE: 04/07/2022			SHEET 23 OF 135

18/04/2022 11:19 MARIO GARCIA G:\CLIENTS\NPS\SEKI\317446\DRAWINGS\ASH MOUNTAIN DWGS\5_SITE SHEETS\02 – SURVEY CONTROL AMWWTP SPRAYFIELD.DWG

SUMMARY OF ASH MOUNTAIN BOREHOLE TESTING

TEST BORING DEPTH – FEET	USCS CLASSIFICATION[1,2,3]	LOCATION
AM-B-1 (0 TO 15.4)	SC (CLAYEY SAND)	WEST LAGOON
AM-B-1a (0 to 25.1)	SC (CLAYEY SAND)	WEST LAGOON
AM-B-2 (0 to 7) (7 to 15.9)	SC (CLAYEY SAND) SM (SILTY SAND)	BETWEEN EAST & WEST LAGOON
AM-B-3 (0 to 7.9)	SC (CLAYEY SAND)	EAST LAGOON
AM-B-4 (0 to 12.6)	SC (CLAYEY SAND)	EAST LAGOON
AM-B-5 (0 to 2.0) (2.0 to 7.0) (7.0 to 10.3)	SC (CLAYEY SAND) CL (LEAN CLAY) SC (CLAYEY SAND)	WEST LAGOON
AM-B-6 (0 to 7.8)	SC (CLAYEY SAND)	EAST LAGOON

NOTES:
1. SC (CLAYEY SAND) SANDS WITH 50% OR MORE OF COARSE FRACTION PASS NO.4 SIEVE; HAVING SANDS WITH FINES MORE THAN 12% FINES, AND FINES CLASSIFY AS CL OR CH WHERE CL = LEAN CLAY AND CH = FAT CLAY.
2. SM (SILTY SAND) SANDS WITH 50% OR MORE OF COARSE FRACTION PASS NO.4 SIEVE; HAVING SANDS WITH FINES MORE THAN 12% FINES, AND FINES CLASSIFY AS ML OR MH WHERE ML = SILT AND MH = ELASTIC SILT
3. CL (LEAN CLAY) ARE CLAYS OF INORGANIC CLAYS OF LOW PLASTICITY, LEAN CLAYS.

SUMMARY OF ASH MOUNTAIN PERCOLATION TESTING

TEST PIT	MEASURED PERCOLATION RATE (MIN/INCH)	LOCATION
AM2-TP-1	150	SSW OF EXISTING SPRAY FIELD
AM2-TP-2	250	SSW OF EXISTING SPRAY FIELD
AM2-TP-3	250	SSW OF EXISTING SPRAY FIELD
AM2-TP-4	250	SSW OF EXISTING SPRAY FIELD

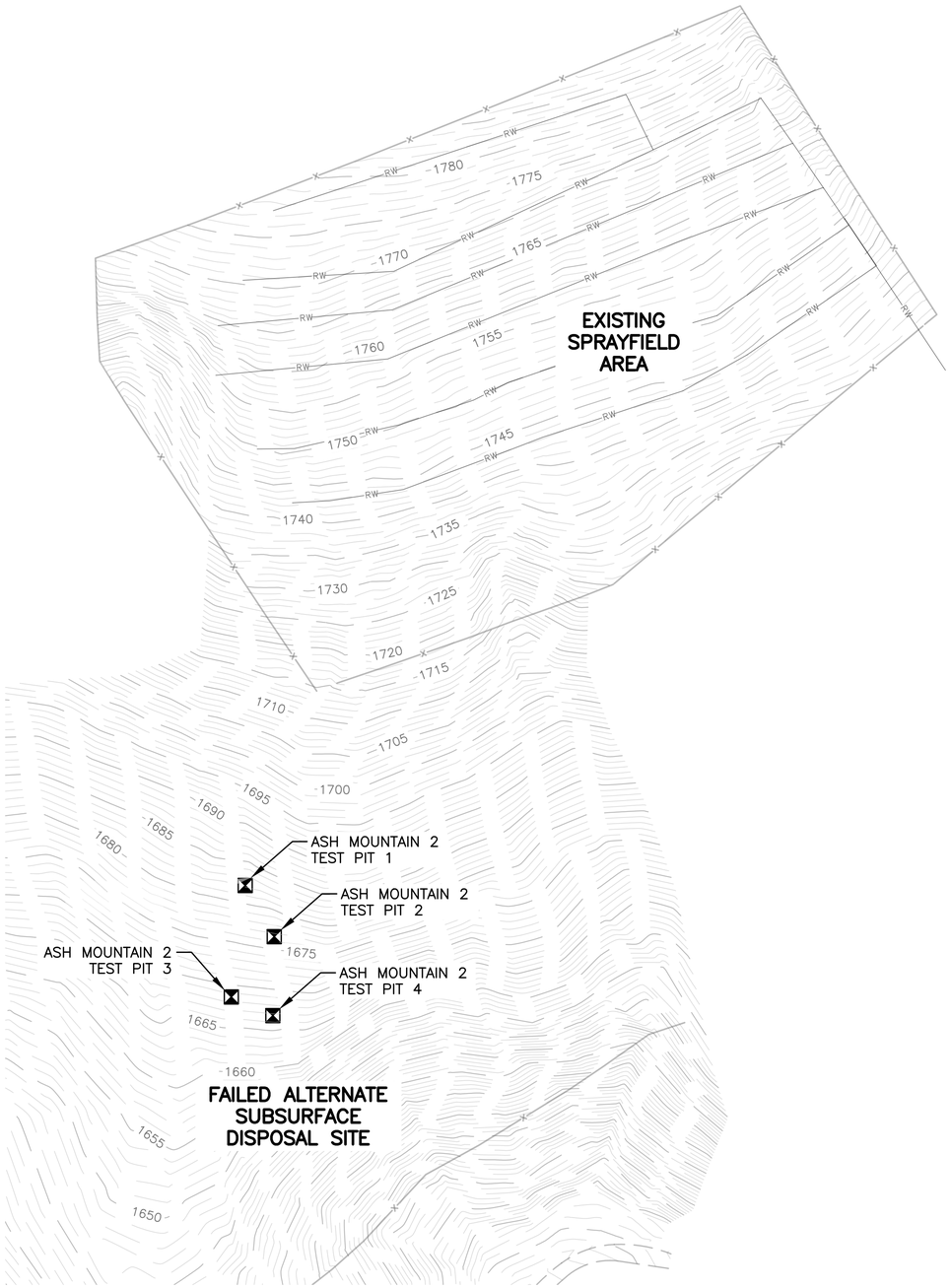

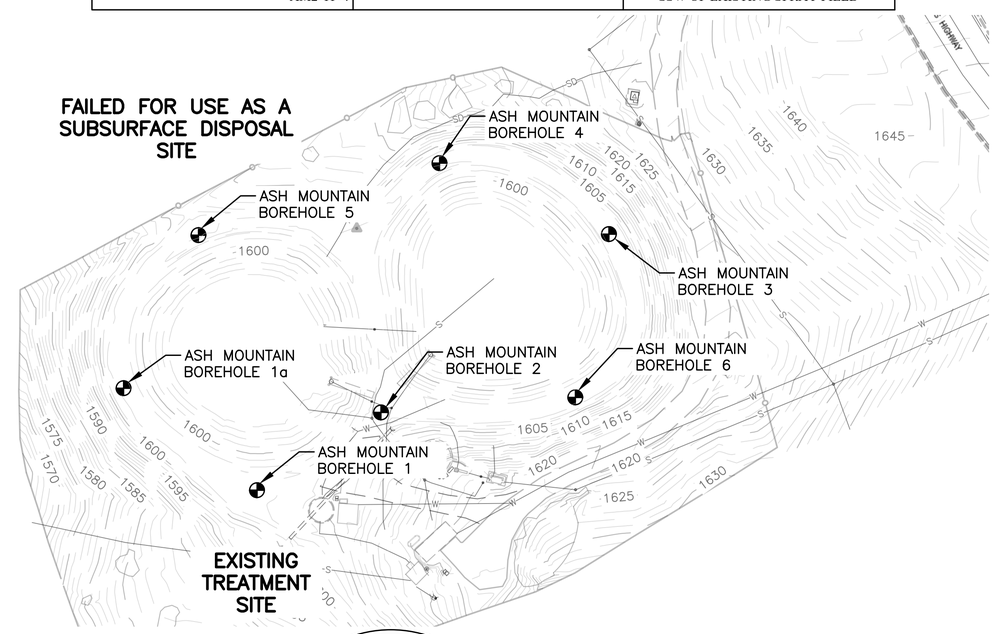

PLAN VIEW – GEOTECH BOREHOLES & TEST PITS AMWWTP & SPRAYFIELD

REGISTERED PROFESSIONAL ENGINEER DAVID BARTON BROOKE NO. 70417 CIVIL STATE OF CALIFORNIA
100% DRAFT

40' 0 40' 80'
SCALE OF FEET

DESIGNED: D. BROOKE	SUB SHEET NO.	TITLE OF SHEET	DRAWING NO.
CADD: M. GARCIA TECH. REVIEW: J. BLOM DATE: 04/07/2022	C1.3	GEOTECH BOREHOLES & TEST PITS AMWWTP REHABILITATE ASH AND BUCKEYE WASTEWATER TREATMENT PLANTS SEQUOIA & KINGS CANYON NATIONAL PARKS	102 / 177,507 PMIS/PKG NO. 317446 SHEET 24 OF 135

19/04/2022 15:44 MARIO GARCIA G:\CLIENTS\NPS\SEKI\317446\DRAWINGS\ASH MOUNTAIN DWGS\5-SITE SHEETS\24 - GEOTECH BOREHOLES & TEST PITS AMWWTP.DWG

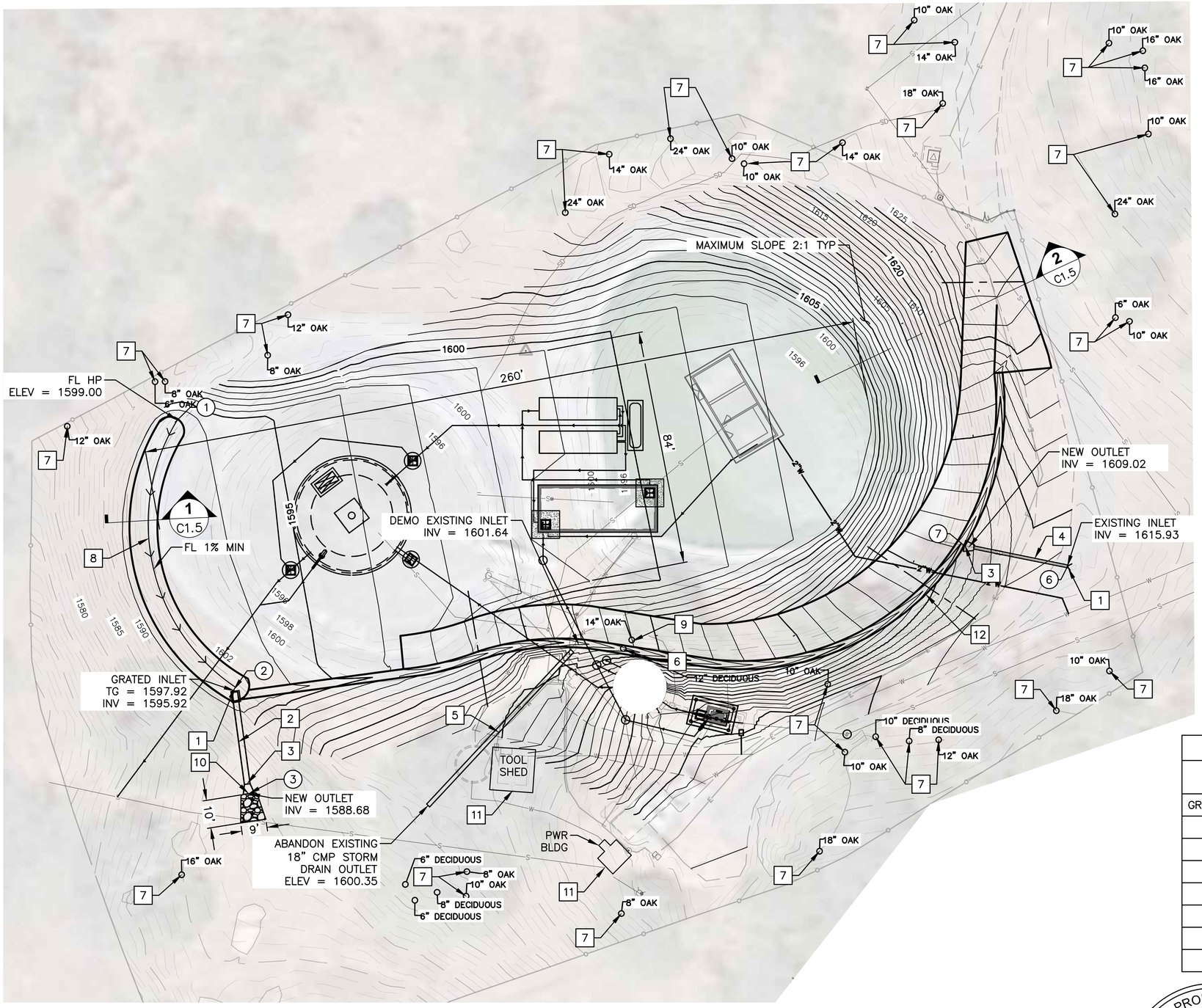

PLAN VIEW – TREATMENT SITE GRADING AMWWTP

NOTES:

1. COORDINATE GRADING SEQUENCE AND CONSTRUCTION OF NEW ACCESS ROAD WITH PHASING DRAWINGS PH1, PH2, AND PH3.
2. COORDINATE WITH BHWWTP GRADING PLAN BORROW SITES TO BRING IN FILL MATERIAL. SOME ADDITIONAL IMPORT FILL MATERIAL FROM OUTSIDE THE PARK MAY BE EXPECTED.
3. MAXIMUM CUT OR FILL SLOPES 2:1
4. GRADE PAD TO SLOPE 4% TO DRAIN.
5. SOUTHWEST CORNER OF PAD HAS A LOW POINT TO COLLECT RUNOFF.
6. RE–VEGETATION WILL BE DONE BY PARK STUFF.

KEYNOTES

1. CONSTRUCT STORM DRAIN INLET PER SHEET D1.14.
2. INSTALL 24" CMP STORM DRAIN PER SPECIFICATIONS.
3. INSTALL STORM DRAIN OUTLET STRUCTURE PER SHEET D1.14. FINAL LOCATION OF OUTLET TO BE DETERMINED IN THE FIELD.
4. REMOVE AND REPLACE EXISTING CMP STORM DRAIN PER SPECIFICATIONS. MATCH EXISTING DIAMETER.
5. ABANDON IN PLACE EXISTING 18" CMP STORM DRAIN PIPE.
6. REMOVE DECIDUOUS TREE.
7. PROTECT AND RETAIN OAK OR DECIDUOUS TREE PER SHEET D1.13.
8. CONSTRUCT DRAINAGE SWALE PER DETAIL 1 / A–2 SHEET C1.5.
9. REMOVE OAK TREE.
10. CONSTRUCT RIP RAP PAD 18 INCH D50 ROCK 30 INCHES THICK.
11. RETAIN AND PROTECT.
12. CONTRACT SWALE PER DETAIL 3 SHEET D1.19.

ESTIMATED EARTH QUANTITIES CUBIC YARD (FILL FACTOR 1.3)

SOURCE	CUT	FILL	IMPORT	EXPORT
AMWWTP	2512	5920	3408	–0–
BHWWTP E LAGOON	1005	417	–0–	588
BHWWTP W LAGOON	2482	711	–0–	1771
TOTAL	5999	7048	3408	2359
OFFSITE IMPORT	(7048 – 5999) = 1049		(3408 – 2359) = 1049	

COORDINATE TABLE

POINT	NORTHING	EASTING	FG ELEV.	NOTE
GRADING – STORM DRAIN				
1	2061705.54	6611401.34	1599.00	FL HIGH POINT, APPROXIMATELY
2	2061607.87	6611421.88	1597.92	CENTER OF GRATED INLET
3	2061552.38	6611468.67	1588.68	CENTER OF OUTLET
4	2061566.56	6611491.30	1600.35	CENTER OF OUTLET
5	2061624.92	6611545.67	1601.79	CENTER OF GRATED INLET
6	2061652.75	6611721.32	1617.06	CENTER OF GRATED INLET
7	2061660.19	6611684.33	1609.01	CENTER OF OUTLET

REGISTERED PROFESSIONAL ENGINEER
DAVID BARTON BROOKE
NO. 70417
100% DRAFT
CIVIL
STATE OF CALIFORNIA

20' 0 20' 40'
SCALE OF FEET

DESIGNED: D. BROOKE	SUB SHEET NO.	TITLE OF SHEET	DRAWING NO.
CADD M. GARCIA	C1.4	TREATMENT SITE GRADING AMWWTP	102 / 177,507
TECH. REVIEW: J. BLOM		REHABILITATE ASH AND BUCKEYE WASTEWATER TREATMENT PLANTS SEQUOIA & KINGS CANYON NATIONAL PARKS	PMIS/PKG NO. 317446
DATE: 04/07/2022			SHEET 25 OF 135

06/04/2022 13:17 MARIO GARCIA C:\CLIENTS\NPS\SEKI\317446\DRAWINGS\ASH MOUNTAIN DWGS\5_SITE SHEETS\25 – TREATMENT SITE GRADING AMWWTP.DWG

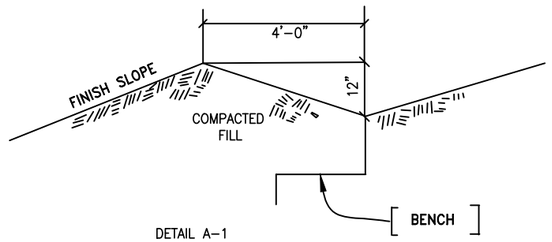

DETAIL A–1

TYPICAL BERM AT TOP OF ALL FILL SLOPES

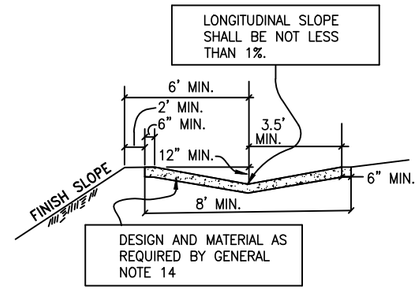

DETAIL A–2

TOP OF SLOPE DRAIN FOR CUT OR FILL SLOPES

1 / C1.5 FILL PLACEMENT AND DRAINAGE DETAIL

NTS

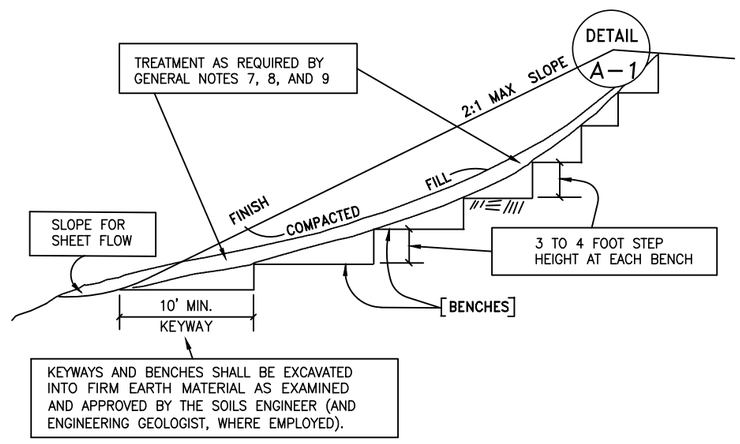

2 / C1.5 KEYWAYS AND BENCHES DETAIL

NTS

GENERAL NOTES

1. GRADING SHALL BE IN ACCORDANCE WITH THE 2021 INTERNATIONAL BUILDING CODE (IBC).
2. A PRECONSTRUCTION CONFERENCE OF ALL INTERESTED PARTIES SHALL BE HELD PRIOR TO ANY CONSTRUCTION OR GRADING TO ANSWER ANY QUESTIONS OR TO CLARIFY ANY PORTION OF THESE GRADING PLANS.
3. ALL RECOMMENDATIONS MADE BY THE SOILS REPORTS REFERENCED IN THE SPECIFICATIONS SHALL BE A PART OF THIS GRADING PLAN.
4. THE GRADING PLAN SHALL BE DESIGNED UTILIZING BEST MANAGEMENT PRACTICES (BMP'S) FOR THE DISCHARGE OF STORM WATER RUNOFF FROM THE PROJECT IN COMPLIANCE WITH THE REQUIREMENTS OF THE NATIONAL POLLUTANT DISCHARGE ELIMINATION SYSTEM (NPDES) PERMIT.
5. ALL GRADED SURFACES SUBJECT TO EROSION SHALL BE PROTECTED AND EROSION CONTROL PLANTING SHALL BE ESTABLISHED AS APPROVED BY THE PARK.
6. STABILIZATION OF SLOPES SHALL BE IN ACCORDANCE WITH PARK METHODS WITH PLANTING OF SUITABLE GRASSES AND GROUND COVER.
7. ALL DELETERIOUS MATERIAL, SUCH AS LUMBER, LOGS, BRUSH, OR ANY OTHER ORGANIC MATERIALS OR RUBBISH, SHALL BE REMOVED FROM ALL AREAS TO RECEIVE COMPACTED FILL.
8. UNSUITABLE MATERIAL, SUCH AS TOP SOIL, WEATHERED BED ROCK, ETC., SHALL BE REMOVED AS REQUIRED BY THE SPECIFICATIONS FROM ALL AREAS TO RECEIVE COMPACTED FILL OR DRAINAGE STRUCTURES.
9. ALL AREAS TO RECEIVE COMPACTED FILL SHALL BE INSPECTED AND APPROVED BY THE CONTRACTOR'S SOILS ENGINEER AFTER REMOVAL OF UNSUITABLE MATERIAL AND EXCAVATION OF KEYWAYS AND BENCHES, AND PRIOR TO PLACEMENT OF SUBSURFACE DRAINAGE SYSTEMS OR ANY FILL.
10. ALL SOIL OR ROCK MATERIALS DEEMED UNSUITABLE FOR PLACEMENT IN COMPACTED FILL SHALL BE REMOVED FROM THE SITE. ANY MATERIAL SUCH AS CONCRETE OR IMPORTED MATERIALS SHALL BE APPROVED BY THE CONTRACTING OFFICER AND MEET SPECIFICATIONS PRIOR TO USE IN COMPACTED FILL. WHERE EXCAVATED MATERIAL IS BLOCKY, IT WILL BE BROKEN INTO SUITABLE PARTICLE SIZES, NONE LARGER THAN 12 INCHES IN LARGEST DIMENSION, BEFORE BEING USED AS FILL IN CONFORMANCE WITH 2021 IBC.
11. THE CONTRACTING OFFICER SHALL DIRECT THE REMOVAL OR TREATMENT OF ANY EXISTING UNDERGROUND STRUCTURES ENCOUNTERED SUCH AS ABANDONED UTILITY LINES, ETC.
12. ALL EXCAVATED BACK SLOPES AND KEYS FOR BUTTRESS FILLS MUST BE EXAMINED BY THE CONTRACTOR'S SOILS ENGINEER AND ENGINEERING GEOLOGIST TO INSURE THAT ALL POTENTIAL PLANES OF FAILURE HAVE BEEN EXPOSED IN THE EXCAVATION AND WILL BE ADEQUATELY SUPPORTED BY THE PROPOSED BUTTRESS. FIELD CERTIFICATION TO BE SUBMITTED BY THE CONSULTANTS.
13. THE SOILS ENGINEER SHALL SUBMIT RECOMMENDATIONS FOR CORRECTIVE WORK TO INSURE SLOPE STABILITY WHERE UNSTABLE MATERIAL IS EXPOSED AT THE TOP OF CUTS.
14. INTERCEPTOR DRAINS SHALL ALL BE CONSTRUCTED OF 3" MIN. P.C.C. (OR GUNITE) REINFORCED WITH 6" x 6" x 10 x 10 W.W.M. AND SHALL BE OF EITHER SEMI–CIRCULAR OR TRIANGULAR CROSS SECTION, AND SHALL BE INSTALLED PRIOR TO THE WET SEASON.
15. FINAL COMPACTION AND SOILS ENGINEERING (AND, IF APPLICABLE, ENGINEERING GEOLOGY) REPORTS, SUMMARIZING ALL WORK PERFORMED AND CONCLUDING THAT FILLS HAVE BEEN PLACED ACCORDING TO THE APPROVED PLANS AND STATING THAT ALL GEOLOGIC FEATURES ARE GROSSLY STABLE AS GRADED SHALL BE SUBMITTED TO THE CONTRACTING OFFICER PRIOR TO SUBSTANTIAL COMPLETION OF THE PROJECT.

REGISTERED PROFESSIONAL ENGINEER
DAVID BARTON BROOKE
NO. 72417
100% DRAFT
CIVIL
STATE OF CALIFORNIA

DESIGNED: D. BROOKE CADD M. GARCIA TECH. REVIEW: J. BLOM DATE: 04/07/2022	SUB SHEET NO. C1.5	TITLE OF SHEET GRADING DETAILS REHABILITATE ASH AND BUCKEYE WASTEWATER TREATMENT PLANTS SEQUOIA & KINGS CANYON NATIONAL PARKS	DRAWING NO. 102 / 177,507 PMIS/PKG NO. 317446 SHEET 26 OF 135

22/04/2022 12:37 MARIO GARCIA G:\CLIENTS\NPS\SEK\317446\DRAWINGS\ASH MOUNTAIN DWGS\5 SITE SHEETS\26 - DETAILS GENERAL 6.DWG

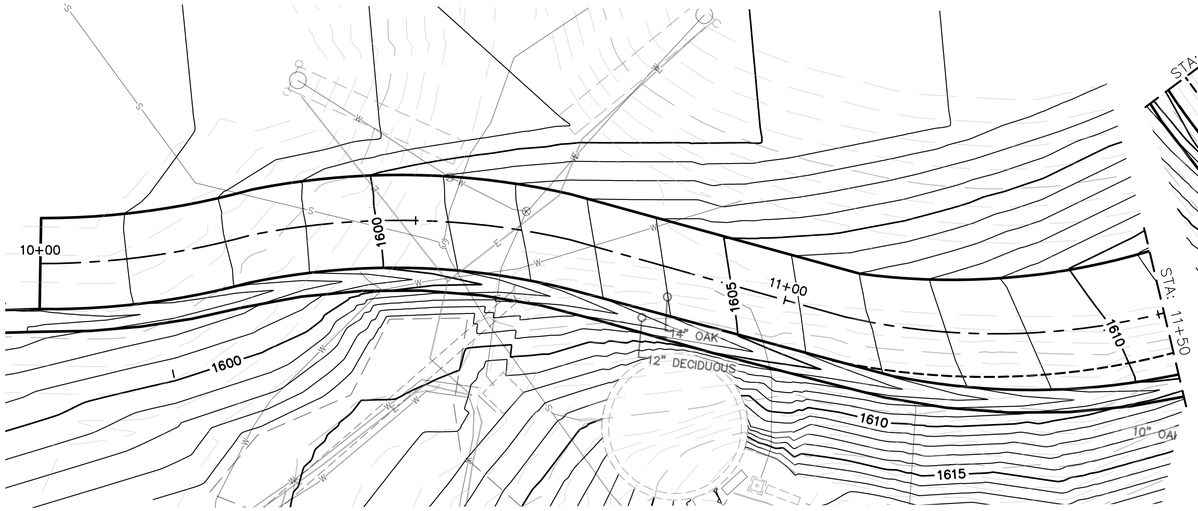

PLAN VIEW – ACCESS ROAD AMWWTP STA: 10+00–11+50

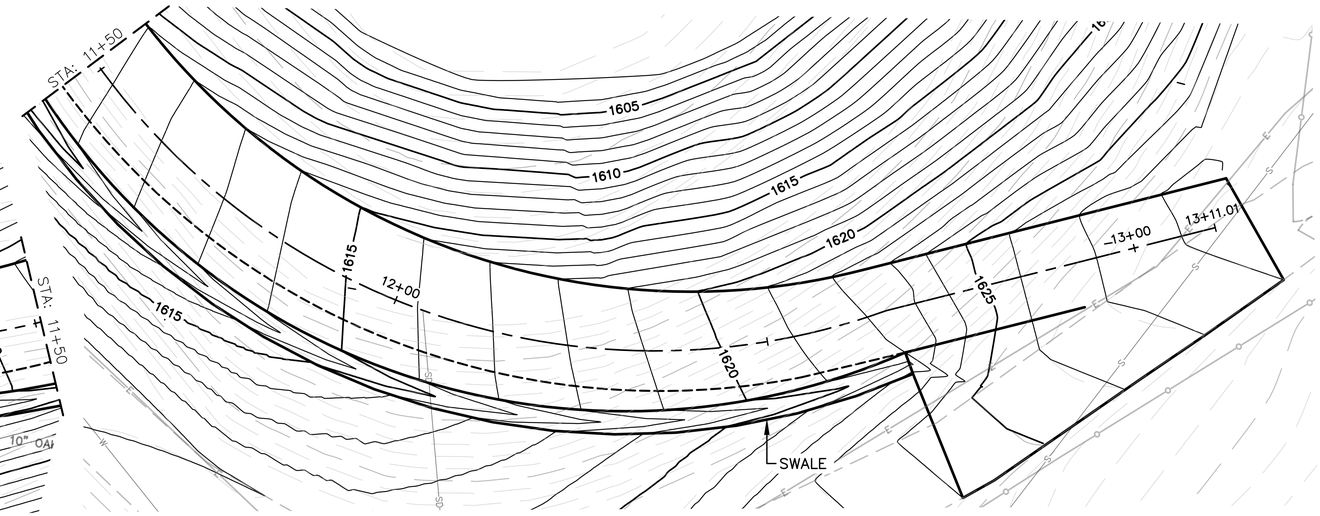

PLAN VIEW – ACCESS ROAD AMWWTP STA: 11+50–13+11.03

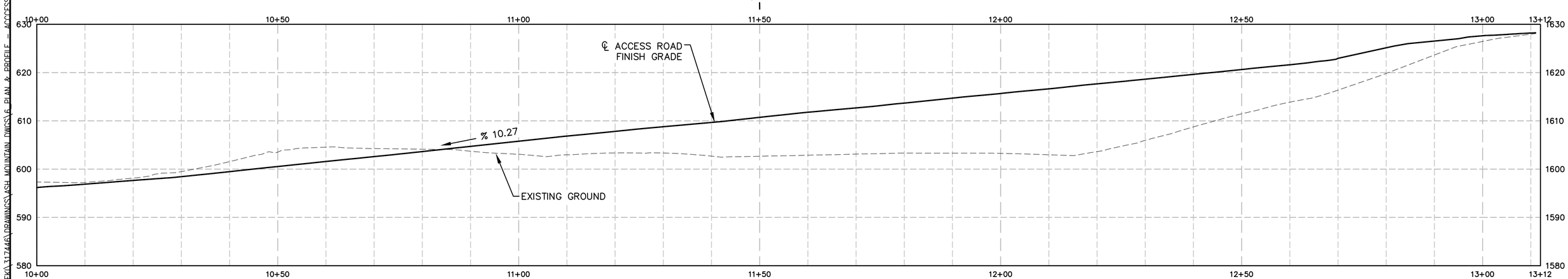

PROFILE VIEW – ACCESS ROAD AMWWTP STA: 10+00–13+11.01

REGISTERED PROFESSIONAL ENGINEER
DAVID BARTON BROOKE
NO. 70417
CIVIL
STATE OF CALIFORNIA
100% DRAFT

10' 0 10' 20' H
1' 0 1' 2' V
SCALE OF FEET

DESIGNED: D. BROOKE CADD M. GARCIA TECH. REVIEW: J. BLOM DATE: 04/07/2022	SUB SHEET NO. C1.6	TITLE OF SHEET PLAN & PROFILE ACCESS ROAD AMWWTP REHABILITATE ASH AND BUCKEYE WASTEWATER TREATMENT PLANTS SEQUOIA & KINGS CANYON NATIONAL PARKS	DRAWING NO. 102 / 177,507 PMIS/PKG NO. 317446 SHEET 27 OF 135

22/04/2022 14:26 MARIO GARCIA G:\CLIENTS\NPS\SEK\317446\DRAWINGS\ASH MOUNTAIN DWGS\A PLAN & PROFILE - ACCESS ROAD\27 - PLAN AND PROFILE ACCESS ROAD AMWWTP.DWG

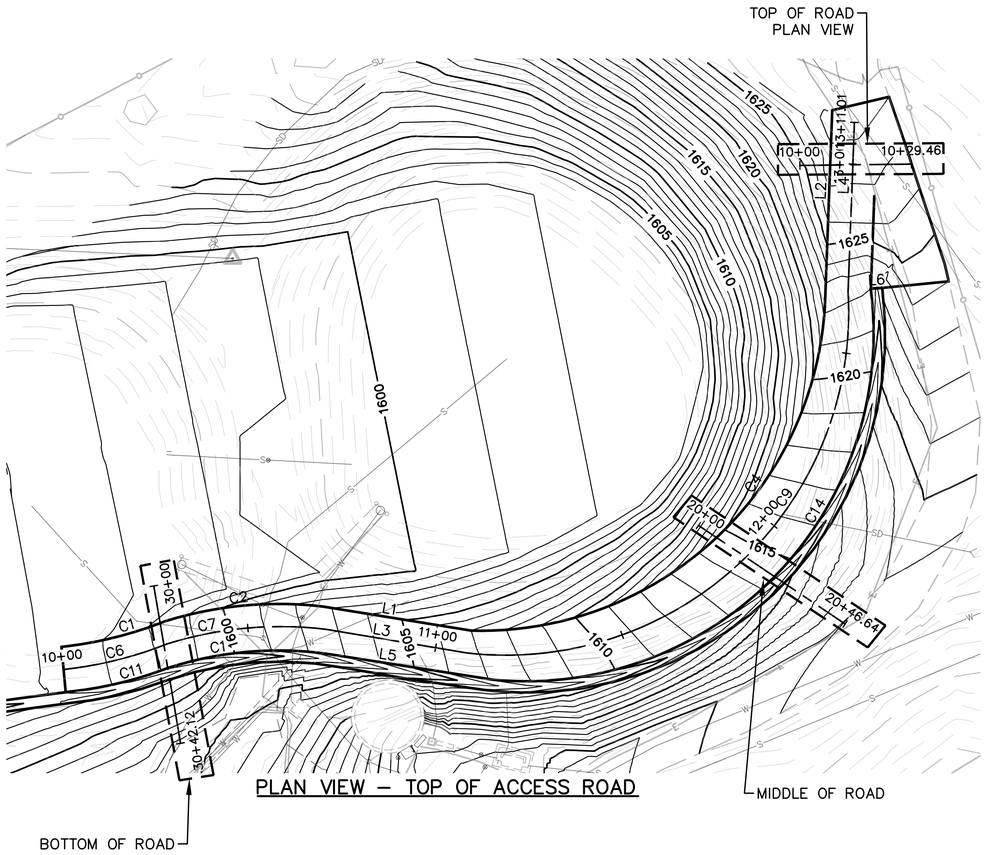

PLAN VIEW – TOP OF ACCESS ROAD

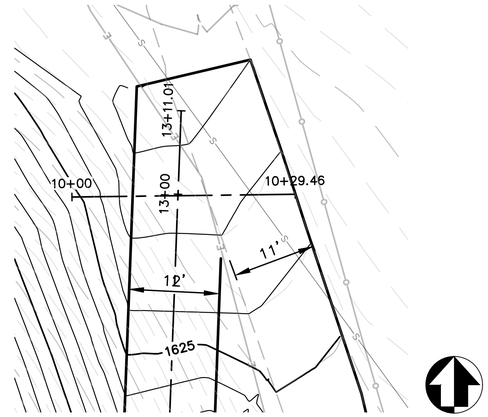

PLAN VIEW – TOP OF ACCESS ROAD AMWWTP STA: 10+00–10+29.46

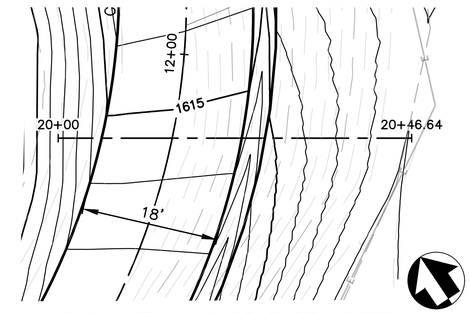

PLAN VIEW – MIDDLE OF ACCESS ROAD AMWWTP STA: 20+00–20+46.64

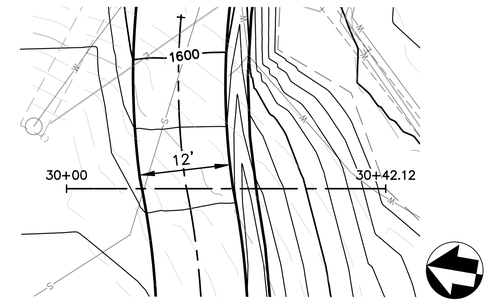

PLAN VIEW – TOP OF ACCESS ROAD AMWWTP STA: 30+00–30+42.12

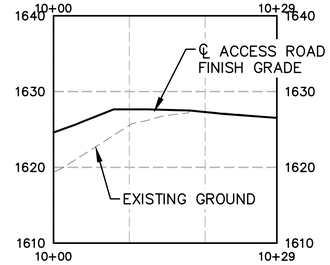

PROFILE VIEW – TOP OF ACCESS ROAD AMWWTP STA: 10+00–10+29

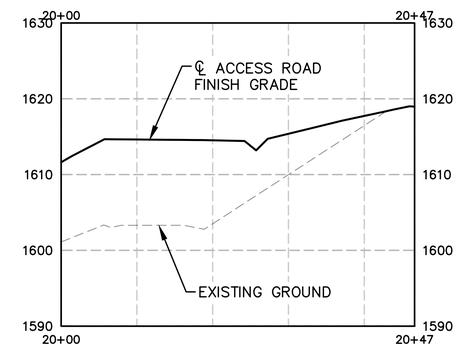

PROFILE VIEW – MIDDLE OF ACCESS ROAD AMWWTP STA: 20+00–20+47

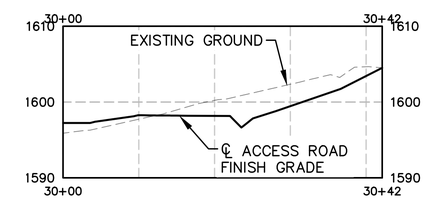

PROFILE VIEW – BOTTOM OF ACCESS ROAD AMWWTP STA: 30+00–30+42

Line Table

SEGMENT	LENGTH	BEARING
L1	39.46'	S80°45'58"E
L2	48.86'	N02°09'02"E
L3	37.80'	S80°27'59"E
L5	43.99'	S81°07'44"E
L6	3.01'	N86°24'46"E

Curve Table

CURVE	LENGTH	RADIUS	DELTA	CHORD BEARING	CHORD LENGTH
C1	28.25'	103.74'	015.60	N76°06'50"E	28.17'
C2	42.32'	100.49'	024.13	N84°43'55"E	42.01'
C4	143.05'	90.94'	090.12	N46°33'48"E	128.75'
C6	28.25'	104.18'	015.54	N76°06'50"E	28.17'
C7	42.32'	100.49'	024.13	N84°43'55"E	42.01'
C9	157.85'	90.49'	099.94	N46°33'30"E	138.58'
C11	28.06'	101.93'	015.77	N76°40'47"E	27.97'
C12	42.40'	94.55'	025.69	N85°01'08"E	42.04'
C14	165.01'	91.77'	103.02	N44°05'51"E	143.66'

REGISTERED PROFESSIONAL ENGINEER
DAVID BARTON BROOKE
NO. 70417
CIVIL
STATE OF CALIFORNIA
100% DRAFT

10' 0 10' 20' H
1' 0 1' 2' V
SCALE OF FEET

DESIGNED: D. BROOKE CADD: M. GARCIA TECH. REVIEW: J. BLOM DATE: 04/07/2022	SUB SHEET NO. C1.7	TITLE OF SHEET CROSS SECTIONS ACCESS ROAD AMWWTP REHABILITATE ASH AND BUCKEYE WASTEWATER TREATMENT PLANTS SEQUOIA & KINGS CANYON NATIONAL PARKS	DRAWING NO. 102 / 177,507 PMIS/PKG NO. 317446 SHEET 28 OF 135

06/04/2022 13:13 MARIO GARCIA G:\CLIENTS\NPS\SEKI\317446\DRAWINGS\ASH MOUNTAIN DWGS\C PLAN & PROFILE - ACCESS ROAD\28 - ROAD CROSS SECTIONS.AMWWTP.DWG

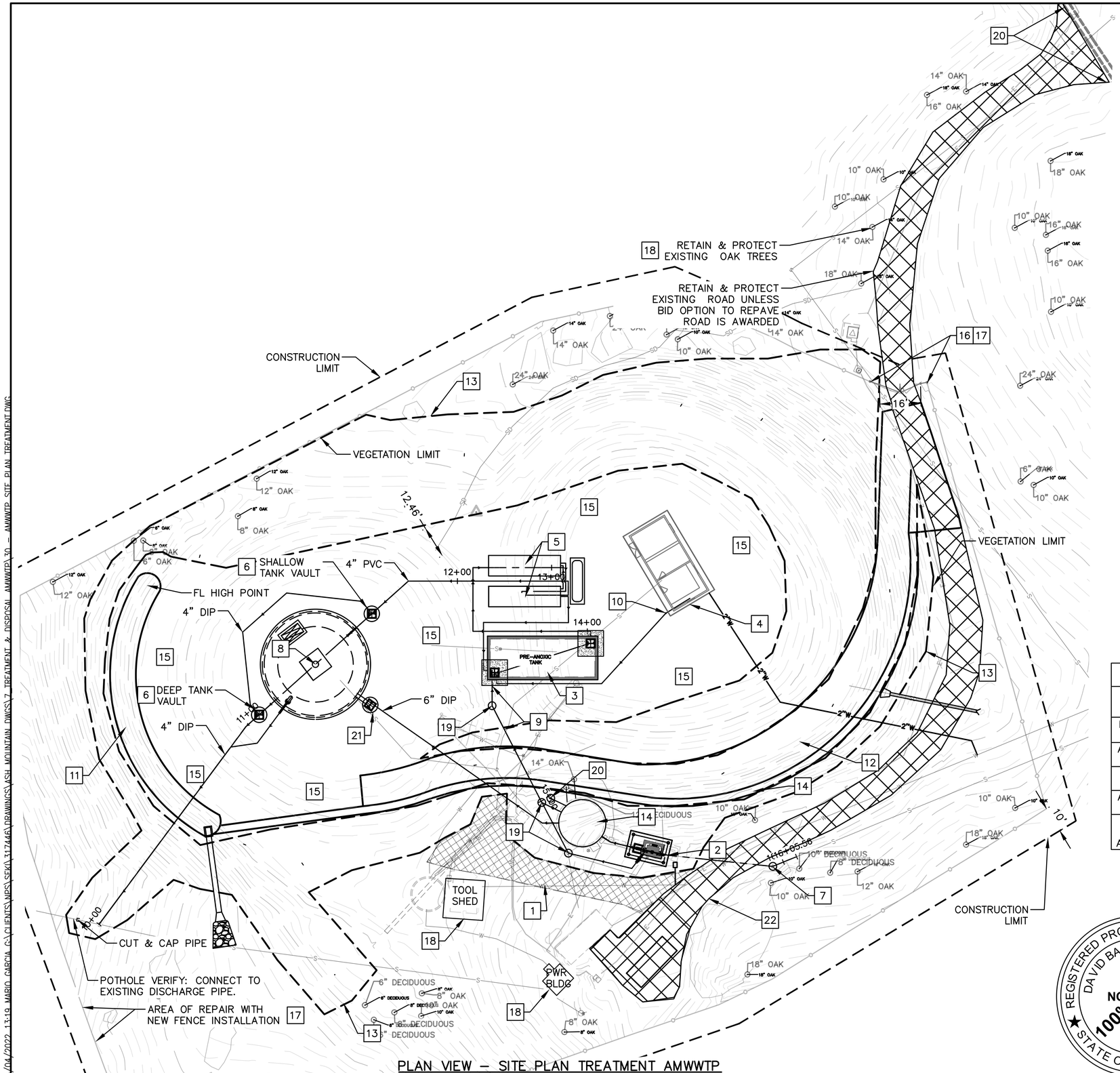

PLAN VIEW – SITE PLAN TREATMENT AMWWTP

KEYNOTES (BASE BID):

1. CONSTRUCT ALL WEATHER ACCESS ROAD SIMILAR PER SHEET D1.19 DETAIL 3 NO AC.
2. CONSTRUCT COVERED NEW HEADWORKS PER SHEET D1.3
3. CONSTRUCT 18,000 GALLON CONCRETE PRE–ANOXIC TANK PER SHEET D1.6
4. CONSTRUCT NEW GENERATOR & CONTROL BUILDING PER SHEET D1.15, A1.1–1.6
5. CONSTRUCT SECONDARY TREATMENT UNITS PER SHEET D1.7–D1.9
6. INSTALL 6' PRECAST SHALLOW AND DEEP TANK VAULTS PER SHEET D1.2
7. REMOVE EXISTING MANHOLE AND CONSTRUCT 4' PRECAST MANHOLE PER SHEET D1.16
8. CONSTRUCT 100,000 GALLON CONCRETE STORAGE TANK PER SHEET D1.10
9. INSTALL 6" DIP SEWER LINE PER SPECIFICATIONS
10. INSTALL 4" CLEANOUT PER D1.18 AND PVC PIPING PER SPECIFICATIONS
11. CONSTRUCT DRAINAGE SWALE PER SHEET C1.5 DETAIL 1 / A–2.
12. CONSTRUCT ASPHALT ACCESS ROAD PER DETAIL 3, D1.19 AND 3/D1.19
13. RESTORE VEGETATION PER SPECIFICATIONS
14. NOT USED.
15. CONSTRUCT ALL WEATHER DRIVE AREA PER SPECIFICATIONS
16. REMOVE EXISTING CHAIN LINK GATE AND CONSTRUCT 16 FOOT DOUBLE LEAF CHAIN LINK GATE PER SHEET D1.20. (INSTALL SECURITY BARBED WIRE ALONG TOP OF NEW GATE TO MATCH EXISTING SECURITY BARBED WIRE.)
17. REMOVE EXISTING FENCING AND CONSTRUCT NEW FENCING PER SHEET D1.20. (INSTALL SECURITY BARBED WIRE ALONG TOP OF NEW FENCING TO MATCH EXISTING SECURITY BARBED WIRE.) APPROXIMATE TOTAL LENGTH OF NEW FENCING IS 50 FEET
18. RETAIN AND PROTECT UNLESS NOTED OTHERWISE
19. INSTALL MANHOLE WITH PRESSURE PIPING PER SHEET D1.17
20. INSTALL SLUDGE REMOVAL CAM LOCK IN A 4' MANHOLE AND CONNECT 4" DI TO THE PRIMARY TREATMENT TANK
21. INSTALL A 6' EFFLUENT REMOVAL ACCESS VAULT FOR EMERGENCY DRAIN FROM PRIMARY TREATMENT TANK, PER DETAIL SHEET D1.10

KEYNOTES (BID OPTION):

22. GRIND & PULVERIZE APPROXIMATELY 700 SQUARE YARDS OF 4 INCH EXISTING ASPHALT. USE PULVERIZED ASPHALT AS STRUCTURAL ROAD BASE AND RE–PAVE WITH 4 INCHES OF ASPHALT. LIMITS OF RE–PAVING ENDS AT TIE–IN TO GENERALS HIGHWAY
23. RECONFIGURE PRIMARY TREATMENT TANK PER DETAIL SHEET D1.5

SURFACE RESTORATION

ITEM	BEGIN STA.	END STA.	AREA SF	TYPE	KEYNOTE
NEW ACCESS ROAD	N/A	N/A	4402	ASPHALT	12
ALL WEATHER ACCESS	N/A	N/A	1356	GRAVEL	1
VEGETATION	N/A	N/A	25471	VEGETATION	13
ALL WEATHER DRIVE AREA	N/A	N/A	21117	GRAVEL	15
BID OPTION EXISTING ACCESS ROAD	N/A	N/A	6300	ASPHALT	20

REGISTERED PROFESSIONAL ENGINEER
DAVID BARTON BROOKE
NO. 72417
CIVIL
STATE OF CALIFORNIA
100% DRAFT

20' 0 20' 40'
SCALE OF FEET

DESIGNED: D. BROOKE CADD M. GARCIA TECH. REVIEW: J. BLOM DATE: 04/07/2022	SUB SHEET NO. C1.8	TITLE OF SHEET SITE PLAN AMWWTP TREATMENT REHABILITATE ASH AND BUCKEYE WASTEWATER TREATMENT PLANTS SEQUOIA & KINGS CANYON NATIONAL PARKS	DRAWING NO. 102 / 177,507 PMIS/PKG NO. 317446 SHEET 29 OF 135

26/04/2022 13:19 MARIO GARCIA G:\CLIENTS\NPS\SEQ\317446\DRAWINGS\ASH MOUNTAIN DWGS\7 TREATMENT & DISPOSAL AMWWTP\30 – AMWWTP

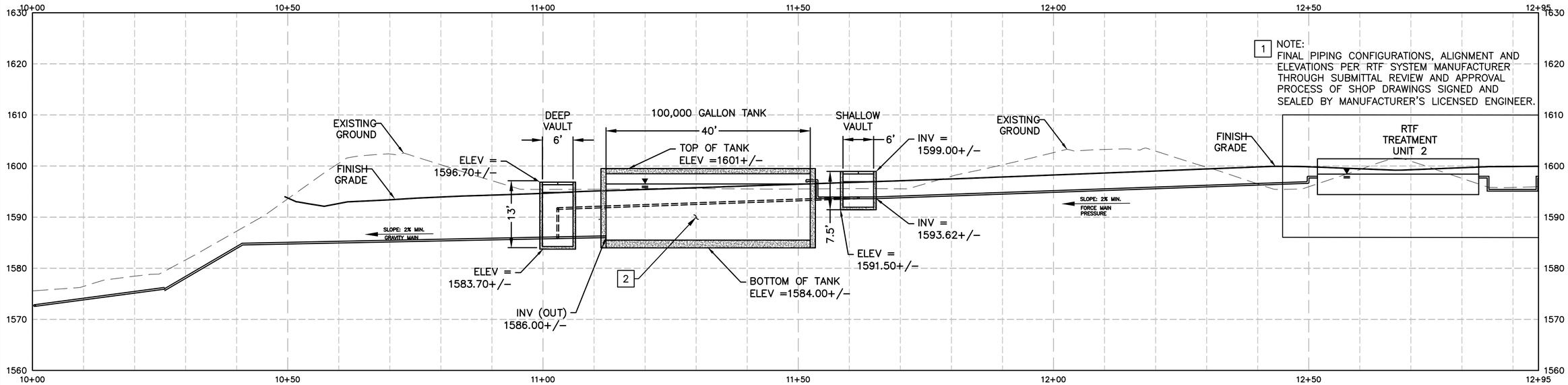

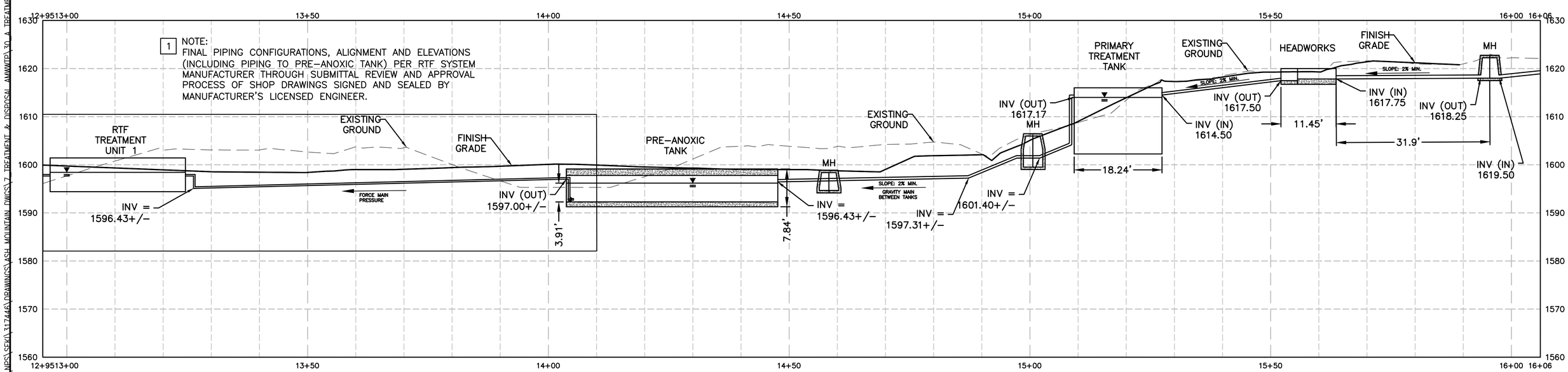

NOTES:

1. COORDINATE CONSTRUCTION OF TREATMENT SITE SYSTEM WITH PHASING DRAWINGS PH1.1, PH1.2, AND PH1.3.
2. RESTORE SURFACE VEGETATION AFTER CONSTRUCTION. RE-VEGETATION WILL BE DONE BY PARK STUFF.

KEYNOTES:

1. FINAL RTF PIPING ALIGNMENT LAYOUTS AND ELEVATIONS PER MANUFACTURER'S RECOMMENDATIONS THROUGH SUBMITTAL REVIEW AND APPROVAL PROCESS.
2. FINAL 100,000 GALLON TANK DESIGN, PIPING ALIGNMENTS AND ELEVATIONS PER MANUFACTURER'S RECOMMENDATIONS THROUGH SUBMITTAL REVIEW AND APPROVAL PROCESS.

REGISTERED PROFESSIONAL ENGINEER
DAVID BARTON BROOKE
NO. 70417
100% DRAFT
CIVIL
STATE OF CALIFORNIA

10' 0 10' 20'
SCALE OF FEET

DESIGNED: D. BROOKE	SUB SHEET NO.	TITLE OF SHEET	DRAWING NO.
CADD: M. GARCIA	C1.9	TREATMENT SITE SYSTEM PROFILE AMWWTP	102 / 177,507
TECH. REVIEW: J. BLOM		REHABILITATE ASH AND BUCKEYE WASTEWATER TREATMENT PLANTS SEQUOIA & KINGS CANYON NATIONAL PARKS	PMIS/PKG NO. 317446
DATE: 04/07/2022			SHEET 30 OF 135

26/04/2022 13:17 MARIO GARCIA G:\CLIENTS\NPS\SEKI\317446\DRAWINGS\ASH MOUNTAIN DWGS\7 TREATMENT & DISPOSAL AMWWTP\30 A TREATMENT SITE SYSTEM PROFILE.DWG

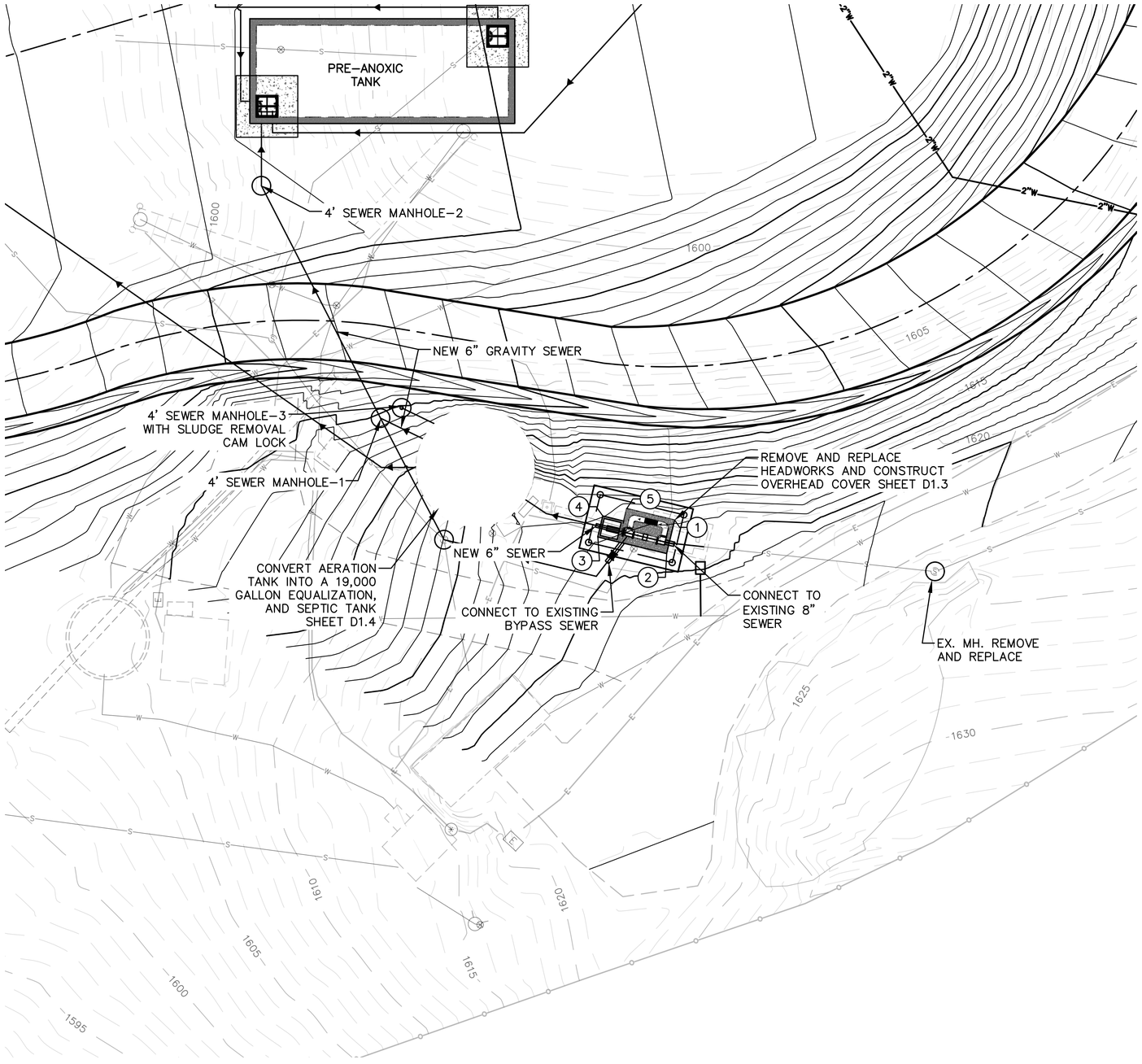

PLAN VIEW – HEADWORKS & PRIMARY TREATMENT AMWWTP

NOTES:

1. COORDINATE DEMOLITION SEQUENCE, AND CONSTRUCTION OF NEW TREATMENT TANK AND HEADWORKS WITH PHASING DRAWINGS PH1.1, PH1.2, AND PH1.3.
2. CONSTRUCT A NEW HEADWORKS, FLUME VAULT AND OVERHEAD SHED TO COVER THEM. SEE DETAIL SHEET D1.3.
3. INSTALL SEWER GRINDER, MANUAL BAR SCREEN AND OPEN CHANNEL FLUME IN THE NEW HEADWORTKS.
4. CONVERT AERATION TANK INTO A 19,000–GALLON EQUALIZATION AND SEPTIC TANK, SEE SHEET D1.4.
5. CONSTRUCT TWO 4' PRECAST SEWER MANHOLES AND PIPING ACCORDING TO CONSTRUCTION PHASING PLAN. SEE D1.17 FOR DETAILS.

COORDINATE TABLE

POINT	NORTHING	EASTING	FG ELEV.	NOTE
HEADWORKS	INCLUDING HEADWORKS, FLUME VAULT AND SHED			
1	2061600.66	6611599.82	1618.89	HEADWORKS CONCRETE EDGE
2	2061595.24	6611598.52	1619.54	HEADWORKS CONCRETE EDGE
3	2061597.93	6611587.35	1618.88	FLUME VAULT CONCRETE EDGE
4	2061601.33	6611588.16	1618.67	FLUME VAULT CONCRETE EDGE
5	2061602.53	6611592.05	1618.90	HEADWORKS CONCRETE EDGE
4' SEWER MANHOLE–1	2061617.11	6611552.14	1606.46	STANDARD MANHOLE CENTER
4' SEWER MANHOLE–2	2061654.90	6611532.76	1603.38	STANDARD MANHOLE CENTER
4' SEWER MANHOLE–3	2061618.87	6611555.54	1606.07	FOR SLUDGE REMOVAL CAM LOCK

REGISTERED PROFESSIONAL ENGINEER
DAVID BARTON BROOKE
NO. 70417
CIVIL
STATE OF CALIFORNIA
100% DRAFT

20' 0 20' 40'
SCALE OF FEET

DESIGNED: D. BROOKE	SUB SHEET NO.	TITLE OF SHEET	DRAWING NO.
CADD M. GARCIA	C1.10	PLAN HEADWORKS & PRIMARY TREATMENT	102 / 177,507
TECH. REVIEW: J. BLOM		REHABILITATE ASH AND BUCKEYE WASTEWATER TREATMENT PLANTS	PMIS/PKG NO. 317446
DATE: 04/07/2022		SEQUOIA & KINGS CANYON NATIONAL PARKS	SHEET 31 OF 135

25/04/2022 09:01 MARIO GARCIA G:\CLIENTS\NPS\SEKI\317446\DRAWINGS\ASH MOUNTAIN DWGS\7 TREATMENT & DISPOSAL AMWWTP\31 – HEADWORKS & PRIMARY TREATMENT.DWG

NOTES:

1. COORDINATE CONSTRUCTION OF NEW ANOXIC RETURN TANK AND WITH PHASING DRAWINGS PH1.1, PH1.2, AND PH1.3.
2. CONSTRUCT 18,000 GALLON CONCRETE PRE-ANOXIC TANK, SECONDARY TREATMENT UNITS AND GENERATOR & CONTROL BUILDING. CONNECT ALL PIPING.

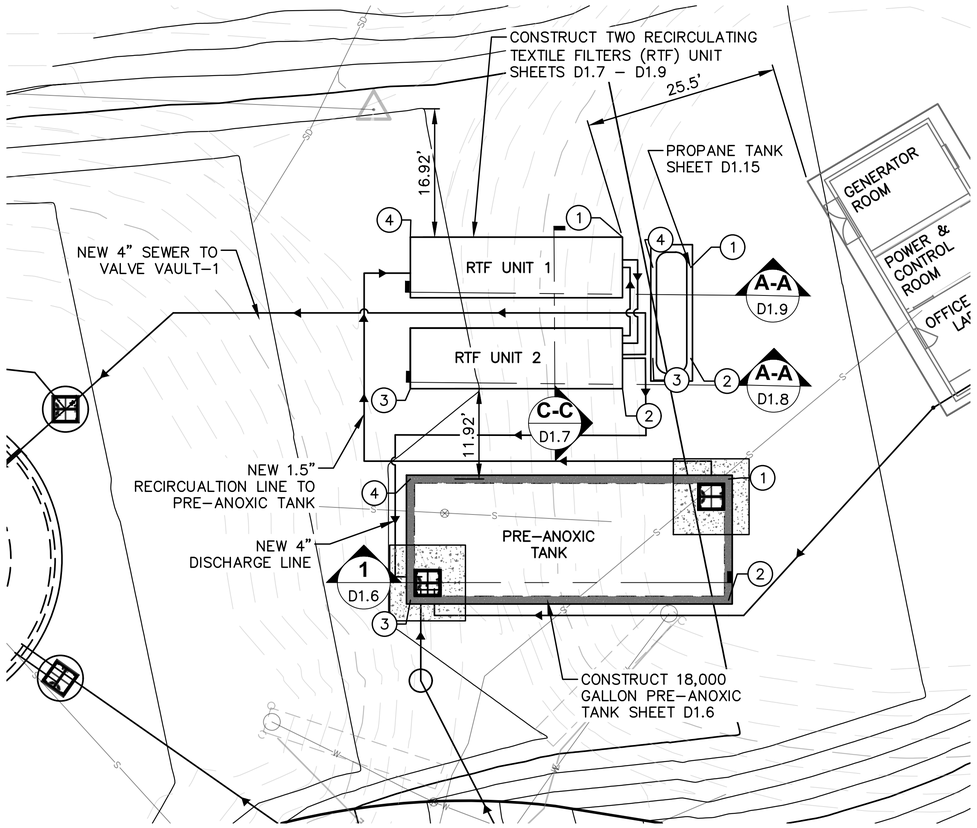

PLAN VIEW – SECONDARY TREATMENT TANKS AMWWTP

COORDINATE TABLE

POINT	NORTHING	EASTING	FG ELEV.	NOTE
18,000 GALLON PRE-ANOXIC TANK				
1	2061681.51	6611573.39	1595.30	CONCRETE EDGE
2	2061665.51	6611573.39	1595.30	CONCRETE EDGE
3	2061681.51	6611531.39	1603.62	CONCRETE EDGE
4	2061665.51	6611531.39	1603.62	CONCRETE EDGE
RTF UNIT				
1	2061713.43	6611559.39	1596.73	UNIT EDGE
2	2061693.43	6611559.39	1596.60	UNIT EDGE
3	2061693.43	6611531.39	1603.47	UNIT EDGE
4	2061713.43	6611531.39	1603.18	UNIT EDGE
PROPANE TANK				
1	2061709.43	6611568.39	1595.30	FOUNDATION EDGE
2	2061697.43	6611568.39	1595.30	FOUNDATION EDGE
3	2061697.43	6611563.39	1595.30	FOUNDATION EDGE
4	2061709.43	6611563.39	1595.33	FOUNDATION EDGE

REGISTERED PROFESSIONAL ENGINEER
DAVID BARTON BROOKE
NO. 72417
CIVIL
STATE OF CALIFORNIA
100% DRAFT

5' 0 5' 10'
SCALE OF FEET

DESIGNED: D. BROOKE CADD: M. GARCIA TECH. REVIEW: J. BLOM DATE: 04/07/2022	SUB SHEET NO. C1.11	TITLE OF SHEET SECONDARY TREATMENT TANKS AMWWTP REHABILITATE ASH AND BUCKEYE WASTEWATER TREATMENT PLANTS SEQUOIA & KINGS CANYON NATIONAL PARKS	DRAWING NO. 102 / 177,507 PMIS/PKG NO. 317446 SHEET 32 OF 135

06/04/2022 14:30 MARIO GARCIA G:\CLIENTS\NPS\SEKI\317446\DRAWINGS\ASH MOUNTAIN DWGS\7 TREATMENT & DISPOSAL AMWWTP\32 - SECONDARY TREATMENT TANKS.DWG

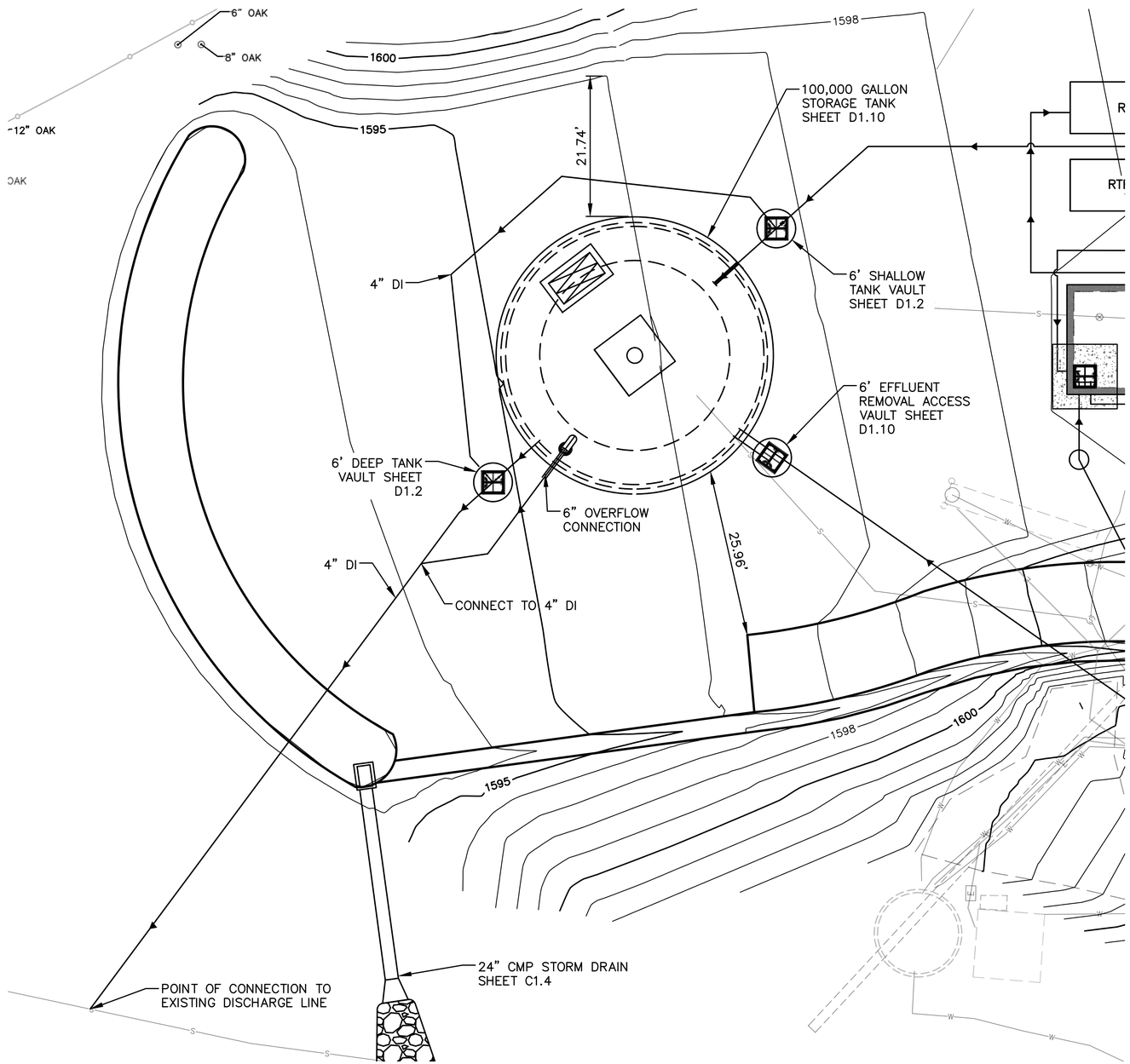

PLAN VIEW – 100,000 GALLON STORAGE TANK AMWWTP

NOTES:

1. COORDINATE CONSTRUCTION OF NEW 100,000 GALLON STORAGE TANK WITH PHASING DRAWINGS PH1.1, PH1.2, AND PH1.3.
2. CONSTRUCT THE 100,000 GALLON STORAGE TANK. SEE DETAILS ON D1.10.
3. CONSTRUCT THREE 6' PRECAST TANK VAULTS. SEE DETAILS ON D1.2 AND D1.10.

COORDINATE TABLE

POINT	NORTHING	EASTING	FG ELEV.	NOTE
6' PRECAST DEEP TANK VAULT	2061651.43	6611441.96	1595.43	CENTER
6' PRECAST SHALLOW TANK VAULT	2061690.77	6611485.95	1595.59	CENTER
6' PRECAST EFFLUENT REMOVAL ACCESS VAULT	2061655.22	6611485.25	1595.61	FOR EMERGENCY USE
100,000 GALLON STORAGE TANK	2061671.04	6611463.94	1595.58	CENTER
POINT OF CONNECTION TO EXISTING DISCHARGE LINE	2061569.79	6611379.58	1575.57	FIELD VERIFY

REGISTERED PROFESSIONAL ENGINEER
DAVID BARTON BROOKE
NO. 72417
CIVIL
STATE OF CALIFORNIA
100% DRAFT

5' 0 5' 10'
SCALE OF FEET

DESIGNED: D. BROOKE CADD M. GARCIA TECH. REVIEW: J. BLOM DATE: 04/07/2022	SUB SHEET NO. C1.12	TITLE OF SHEET 100 000 GALLON STORAGE TANK AMWWTP REHABILITATE ASH AND BUCKEYE WASTEWATER TREATMENT PLANTS SEQUOIA & KINGS CANYON NATIONAL PARKS	DRAWING NO. 102 / 177,507 PMIS/PKG NO. 317446 SHEET 33 OF 135

25/04/2022 12:14 MARIO GARCIA G:\CLIENTS\WES\SEK\317446\DRAWINGS\ASH MOUNTAIN DWGS\7 TREATMENT & DISPOSAL AMWWTP\33 - AMWWTP STORAGE TANK.DWG

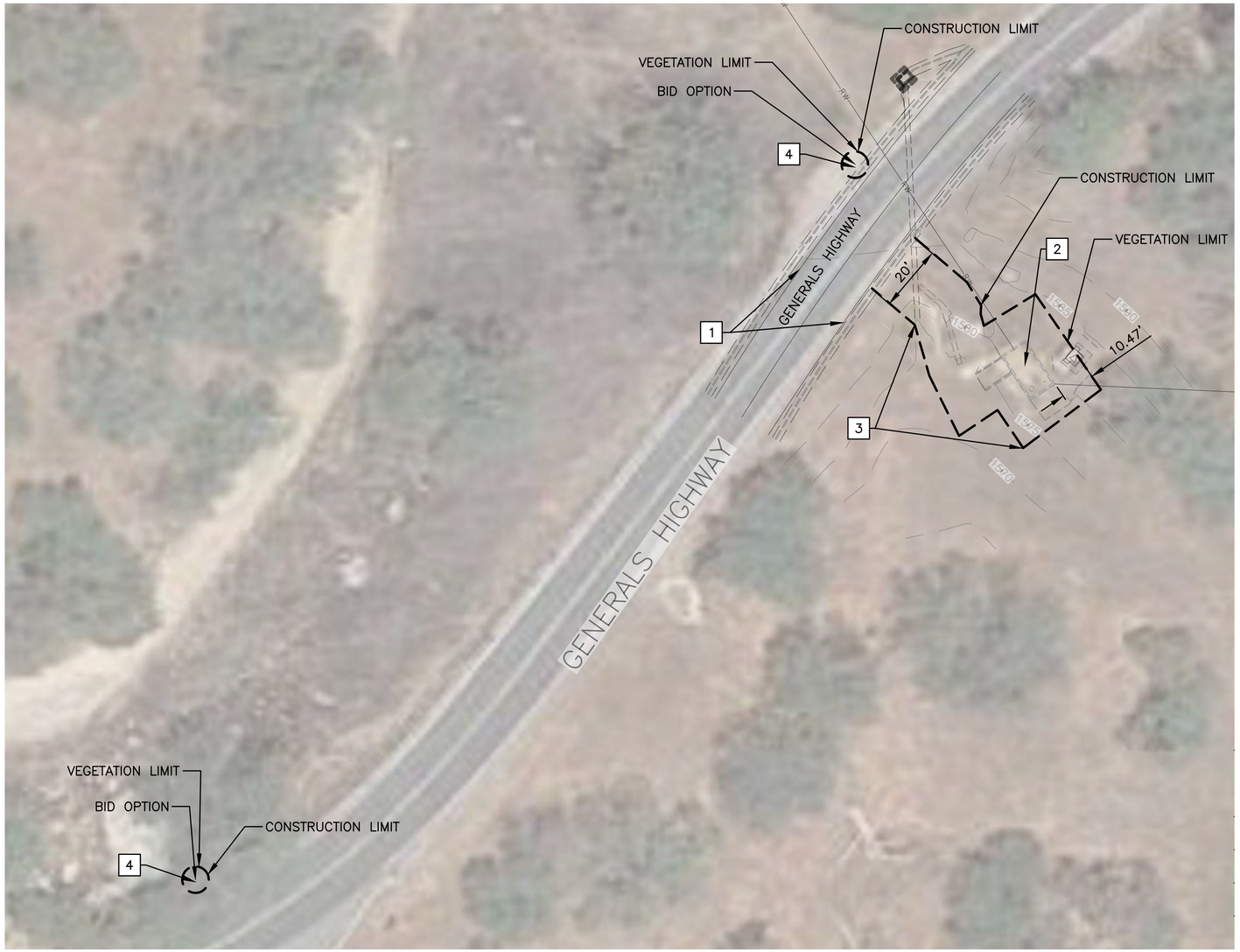

PLAN VIEW – SPRAYFIELD PUMPHOUSE AND MONITORING WELL LOCATIONS AMWWTP

NOTES:

1. COORDINATE CONSTRUCTION OF PUMPHOUSE REHABILITATION WITH PHASING DRAWINGS PH1.1, PH1.2, AND PH1.3.
2. RESTORE SURFACE VEGETATION AFTER CONSTRUCTION. RE–VEGETATION WILL BE DONE BY PARK STUFF.

KEYNOTES (BASE BID):

1 RETAIN AND PROTECT HISTORIC GUTTER ALONG GENERALS HIGHWAY.

2 SPRAYFIELD PUMPHOUSE REHABILITATION SEE DETAIL D1.11.

3 RESTORE VEGETATION PER SPECIFICATIONS AND LIMITS PER PLAN.

KEYNOTES (BID OPTION):

4 INSTALL MONITORING WELL DOWN GRADIENT OF SPRAY FIELD PER SHEET D1.13. FINAL LOCATION TO BE DETERMINED BY THE C.O. IN THE FIELD.

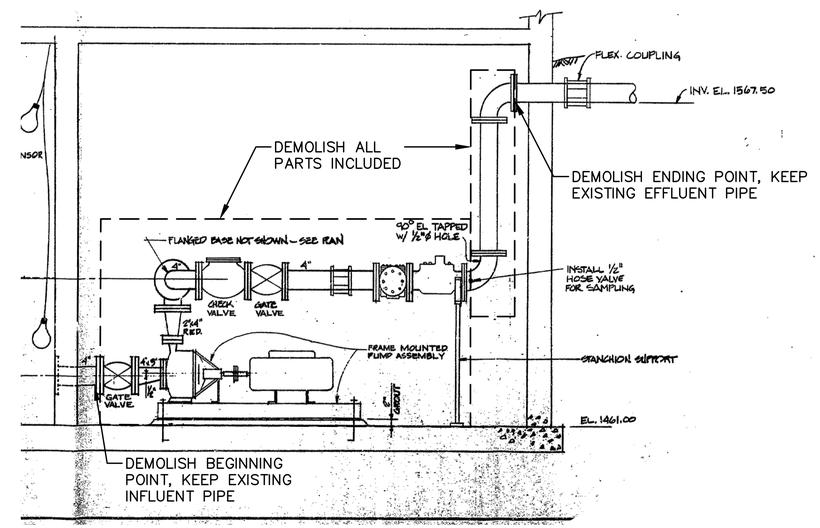

SECTION VIEW – PUMP HOUSE DEMO PLAN
NTS

SURFACE RESTORATION					
ITEM	BEGIN STA.	END STA.	AREA SF	TYPE	KEYNOTE
VEGETATION	N/A	N/A	2189	VEGETATION	

REGISTERED PROFESSIONAL ENGINEER
DAVID BARTON BROOKE
NO. 72417
CIVIL
STATE OF CALIFORNIA
100% DRAFT

20' 0 20' 40'
SCALE OF FEET

DESIGNED: D. BROOKE	SUB SHEET NO.	TITLE OF SHEET	DRAWING NO.
CADD M. GARCIA TECH. REVIEW: J. BLOM DATE: 04/07/2022	C1.13	SPRAYFIELD PUMP & BID OPT WELL AMWWTP REHABILITATE ASH AND BUCKEYE WASTEWATER TREATMENT PLANTS SEQUOIA & KINGS CANYON NATIONAL PARKS	102 / 177,507 PMIS/PKG NO. 317446 SHEET 34 OF 135

25/04/2022 16:52 MARIO GARCIA G:\CLIENTS\NPS\SEKI\317446\DRAWINGS\ASH MOUNTAIN DWGS\7_TREATMENT & DISPOSAL AMWWTP\34 – AMWWTP SPRAYFIELD PUMPHOUSE.DWG

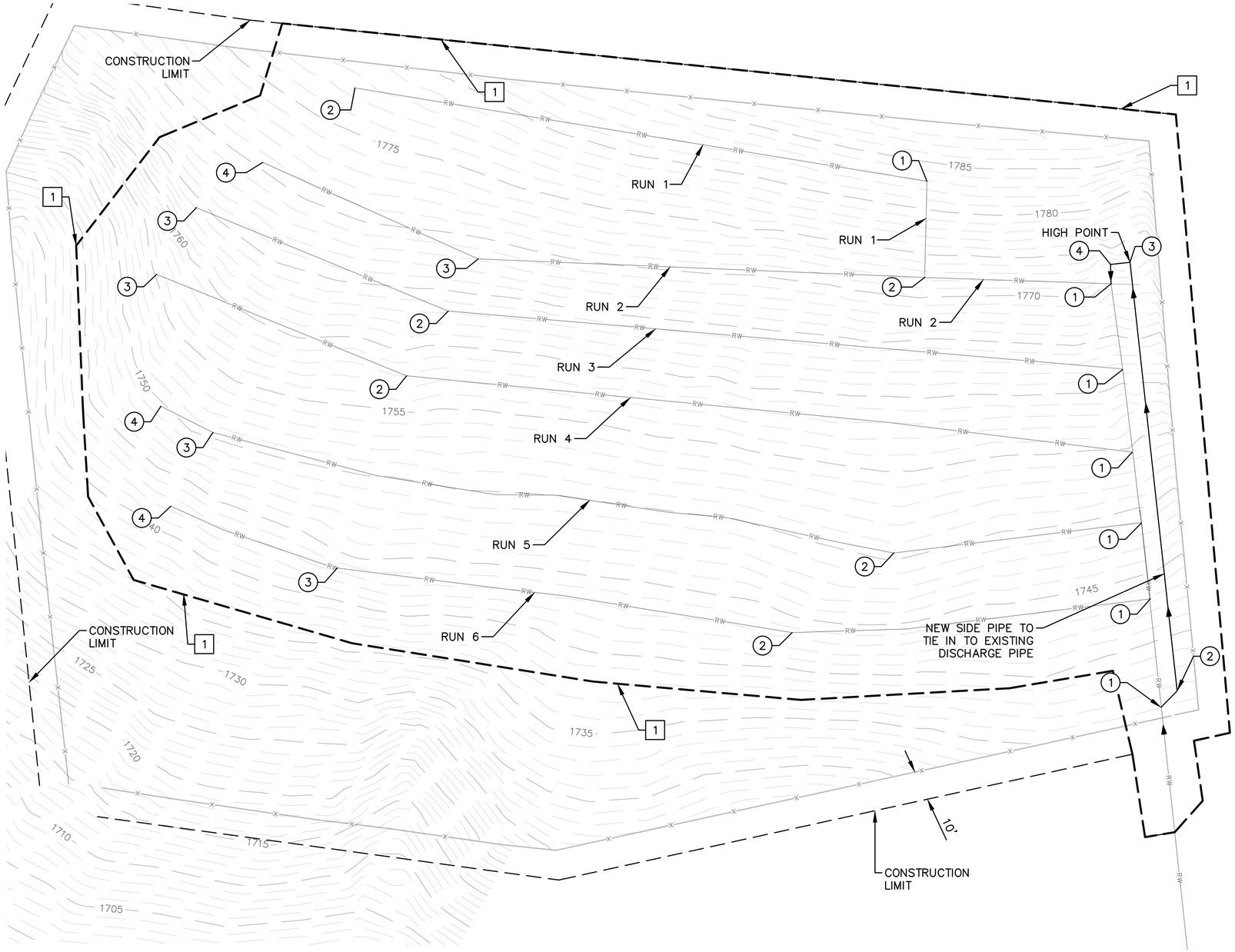

PLAN VIEW – SITE PLAN SPRAYFIELD DISPOSAL AMWWTP

KEYNOTES:

1. RESTORE VEGETATION PER SPECIFICATIONS AND LIMITS PER PLAN THIS SHEET. RE–VEGETATION WILL BE DONE BY PARK STUFF.
2. REHABILITATE SPRAYFIELD PER SHEET C1.15. (BB = BASE BID)
3. REHABILITATE SPRAYFIELD PER SHEET C1.16. (BO = BID OPTION)

COORDINATE TABLE

POINT	NORTHING	EASTING	FG ELEV.	NOTE
RUN 1				
2	2062294.98	6610468.55	1772.28	BB & BO
1	2062324.62	6610454.02	1782.90	BB & BO
2	2062262.36	6610265.05	1777.46	BB
RUN 2				
1	2062322.52	6610526.28	1770.05	BB & BO
2	2062294.98	6610468.55	1772.28	BB
3	2062229.86	6610329.65	1768.13	BB
4	2062225.08	6610248.78	1770.42	BB
RUN 3				
1	2062298.33	6610543.46	1761.40	BB & BO
2	2062209.23	6610328.83	1763.15	BB
3	2062200.76	6610235.43	1764.02	BB
RUN 4				
1	2062274.46	6610559.84	1754.52	BB & BO
2	2062182.91	6610326.37	1757.89	BB
3	2062174.18	6610234.19	1755.20	BB
RUN 5				
1	2062254.58	6610573.51	1748.84	BB & BO
2	2062206.18	6610502.81	1750.43	BB
3	2062134.95	6610276.39	1750.44	BB
4	2062134.69	6610256.41	1749.68	BB
RUN 6				
1	2062232.88	6610588.21	1742.81	BB & BO
2	2062165.83	6610484.49	1743.48	BB
3	2062112.96	6610334.59	1743.30	BB
4	2062105.85	6610275.27	1742.37	BB
NEW 4" SIDE PIPE	TIE IN TO DISCHARGE LINE (BB & BO)			
1	2062201.77	6610608.68	1736.02	45 DEGREE ELBOW
2	2062209.10	6610610.98	1736.64	45 DEGREE ELBOW
3	2062332.15	6610528.68	1772.85	HIGH POINT, 90 DEGREE ELBOW
4	2062328.39	6610523.08	1771.81	90 DEGREE ELBOW
BB = BASE BID BO = BID OPTION				

SURFACE RESTORATION

ITEM	BEGIN STA.	END STA.	AREA SF	TYPE	KEYNOTE
SPRAYFIELD			77614	VEGETATION	

NOTES:

1. RETAIN & PROTECT OAK TREES IN PLACE.
2. REMOVE HAZARD TREES.
3. RESTORE VEGETATION ON DISTURBED AREA AFTER CONSTRUCTION.

REGISTERED PROFESSIONAL ENGINEER
DAVID BARTON BROOKE
NO. 72417
CIVIL
STATE OF CALIFORNIA
100% DRAFT

20' 0 20' 40'
SCALE OF FEET

DESIGNED: D. BROOKE CADD: M. GARCIA TECH. REVIEW: J. BLOM DATE: 04/07/2022	SUB SHEET NO. C1.14	TITLE OF SHEET CONTROL PLAN SPRAYFIELD AMWWTP REHABILITATE ASH AND BUCKEYE WASTEWATER TREATMENT PLANTS SEQUOIA & KINGS CANYON NATIONAL PARKS	DRAWING NO. 102 / 177,507 PMIS/PKG NO. 317446 SHEET 35 OF 135

21/04/2022 12:11 MARIO GARCIA G:\CLIENTS\NPS\SEKI\317446\DRAWINGS\ASH MOUNTAIN DWGS\7_TREATMENT & DISPOSAL AMWWTP\35 - AMWWTP SITE PLAN SPRAYFIELD DISPOSAL.DWG

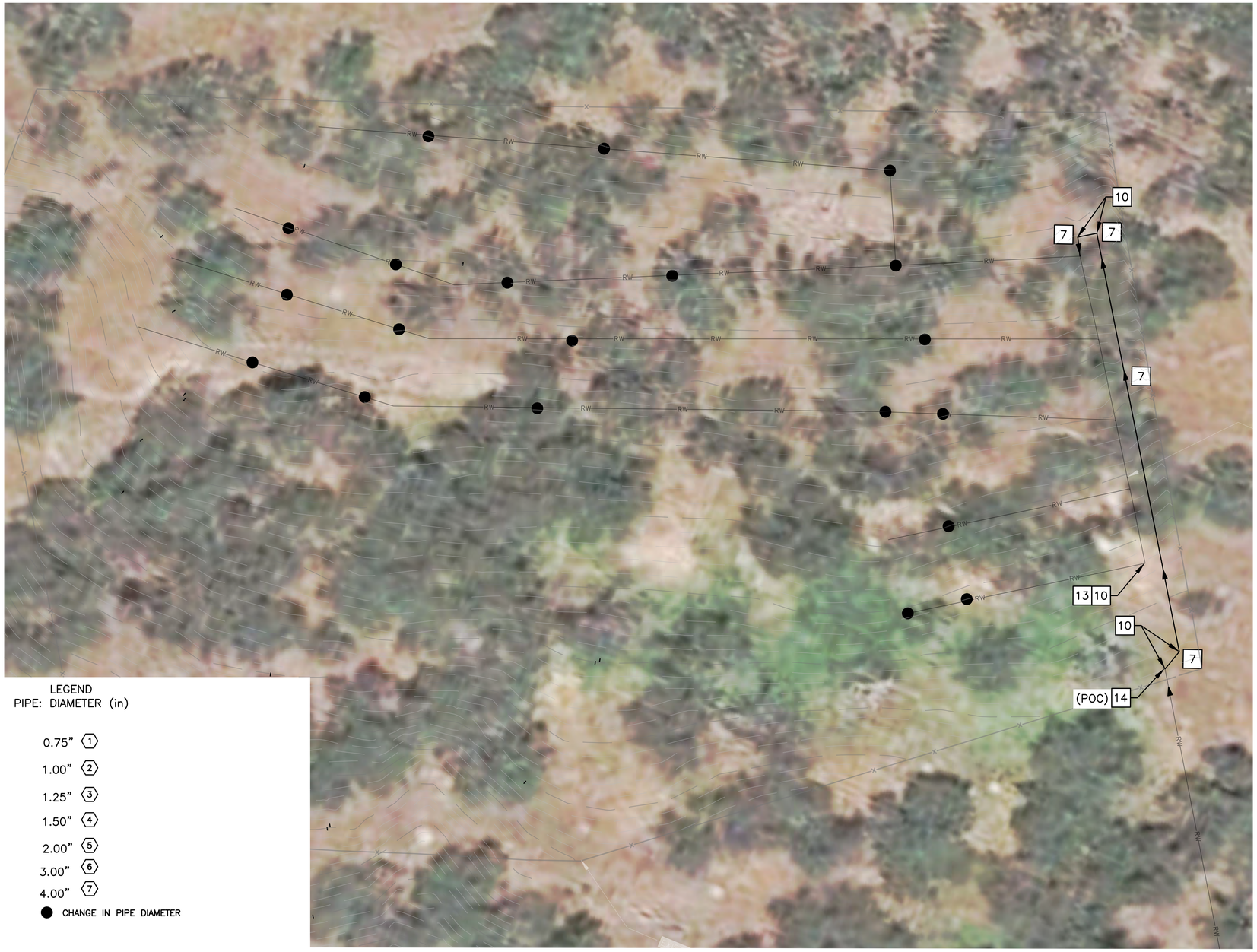

LEGEND
PIPE: DIAMETER (in)

- 0.75" (1)
- 1.00" (2)
- 1.25" (3)
- 1.50" (4)
- 2.00" (5)
- 3.00" (6)
- 4.00" (7)
- ● CHANGE IN PIPE DIAMETER

PLAN VIEW – SPRAYFIELD BASE BID AMWWTP

NOTES:

1. COORDINATE CONSTRUCTION OF SPRAYFIELD REHABILITATION WITH PHASING DRAWINGS PH1.1, PH1.2, AND PH1.3.
2. INSTALL NEW SPRINKLER HEADS REPLACING ALL EXISTING SPRINKLER HEADS WITH SPRINKLER TYPE DESIGNATED ON SHEET D1.12 DETAIL 1.
3. INSTALL PIPE SUPPORTS UNDER ALL NEW PIPING TEES, ELBOWS, AND BENDS. SEE D1.12 FOR DETAILS.
4. NEW PIPE TIE–INS TO EXISTING PIPE SHALL MAINTAIN EXISTING PIPE ELEVATIONS WITH PIPE SUPPORTS.

KEYNOTES:

1. NOT USED
2. NOT USED
3. NOT USED
4. NOT USED
5. NOT USED
6. NOT USED
7. INSTALL 4–INCH SCHEDULE 40 GALVANIZED STEEL PIPE WITH THREADED CONNECTIONS.
8. NOT USED
9. NOT USED
10. INSTALL 4–INCH SCHEDULE 40 GALVANIZED STEEL PIPE ELBOW.
11. NOT USED
12. NOT USED
13. INSTALL PIPE SUPPORTS UNDER ALL NEW PIPING TEES, ELBOWS, AND BENDS. SEE D1.12 FOR DETAILS.
14. POINT OF CONNECTION TO EXISTING PRESSURE LINE. CONNECT TO EXISTING PIPE USING BOLTED FLANGED OR THREADED CONNECTION. FIELD VERIFY.

REGISTERED PROFESSIONAL ENGINEER
DAVID BARTON BROOKE
NO. 77417
CIVIL
STATE OF CALIFORNIA
100% DRAFT

20' 0 20' 40'
SCALE OF FEET

DESIGNED: D. BROOKE CADD M. GARCIA TECH. REVIEW: J. BLOM DATE: 04/07/2022	SUB SHEET NO. C1.15	TITLE OF SHEET SPRAYFIELD BASE BID REHABILITATION AMWWTP REHABILITATE ASH AND BUCKEYE WASTEWATER TREATMENT PLANTS SEQUOIA & KINGS CANYON NATIONAL PARKS	DRAWING NO. 102 / 177,507 PMIS/PKG NO. 317446 SHEET 36 OF 135

25/04/2022 12:27 MARIO GARCIA G:\CLIENTS\NPS\SEK\317446\DRAWINGS\ASH MOUNTAIN DWGS\7 TREATMENT & DISPOSAL AMWWTP\36 – AMWWTP SPRAYFIELD.DWG

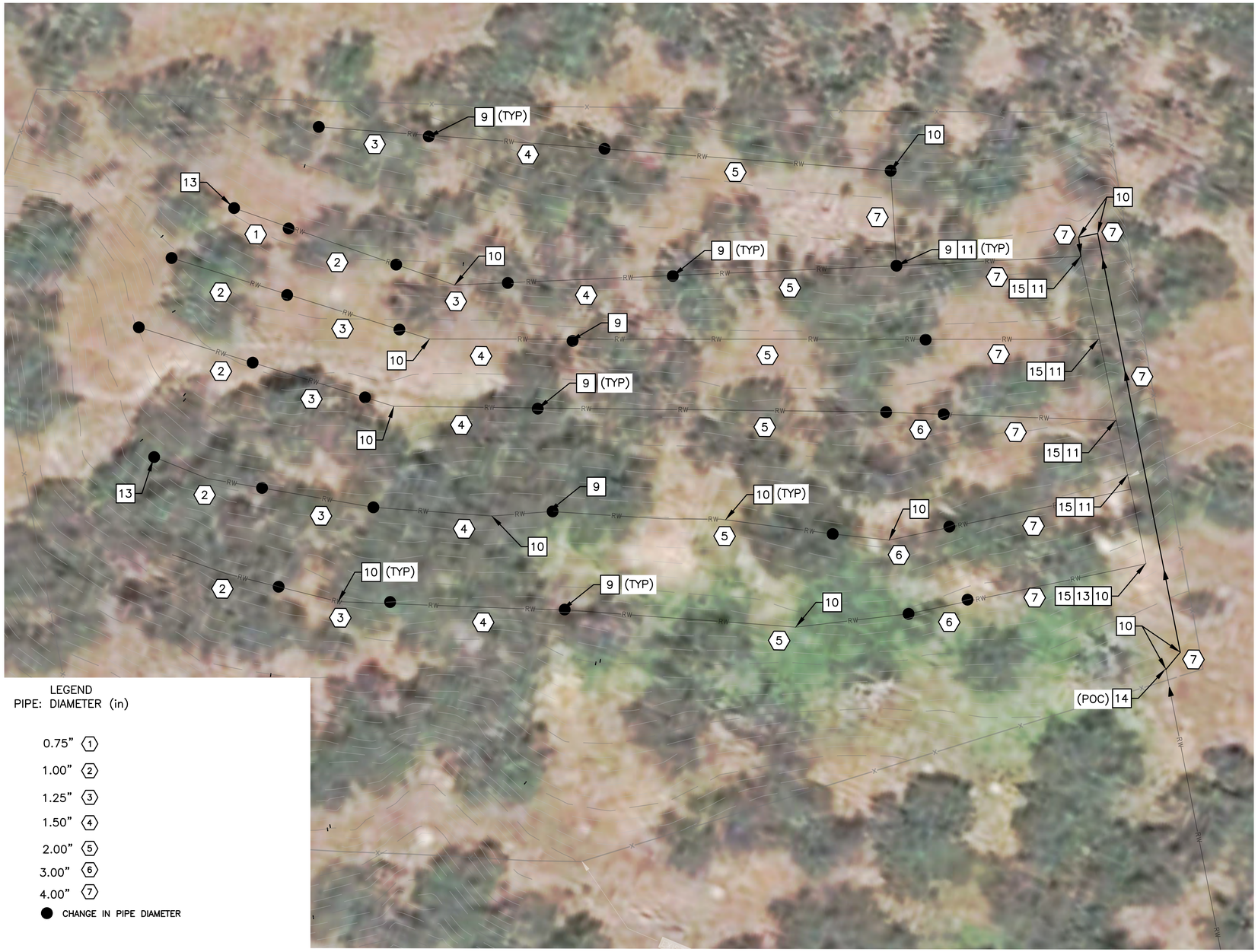

LEGEND
PIPE: DIAMETER (in)

- 0.75" (1)
- 1.00" (2)
- 1.25" (3)
- 1.50" (4)
- 2.00" (5)
- 3.00" (6)
- 4.00" (7)
- ● CHANGE IN PIPE DIAMETER

PLAN VIEW – SPRAYFIELD BID OPTION AMWWTP

NOTES:

1. COORDINATE CONSTRUCTION OF SPRAYFIELD REHABILITATION WITH PHASING DRAWINGS PH1.1, PH1.2, AND PH1.3.
2. INSTALL SPRINKLER WITH PIPE SUPPORT BRACKET MINIMUM EVERY 20' ON THE SPRAY PIPE. SEE D1.12 FOR DETAILS.
3. INSTALL PIPE SUPPORTS AT ALL SPRAY HEADS, TEES, ELBOWS, BENDS AND ENDS. SEE D1.12 FOR DETAILS.
4. INSTALL GALVANIZED STEEL PIPE UNIONS AT ALL REDUCERS.
5. SEE DC1.3 FOR PIPE SIZE DETAILS.

KEYNOTES:

1. INSTALL 3/4 INCH SCHEDULE 40 GALVANIZED STEEL PIPE WITH THREADED CONNECTIONS.
2. INSTALL 1 INCH SCHEDULE 40 GALVANIZED STEEL PIPE WITH THREADED CONNECTIONS.
3. INSTALL 1–1/4 INCH SCHEDULE 40 GALVANIZED STEEL PIPE WITH THREADED CONNECTIONS.
4. INSTALL 1–1/2 INCH SCHEDULE 40 GALVANIZED STEEL PIPE WITH THREADED CONNECTIONS.
5. INSTALL 2–INCH SCHEDULE 40 GALVANIZED STEEL PIPE WITH THREADED CONNECTIONS.
6. INSTALL 3–INCH SCHEDULE 40 GALVANIZED STEEL PIPE WITH THREADED CONNECTIONS.
7. INSTALL 4–INCH SCHEDULE 40 GALVANIZED STEEL PIPE WITH THREADED CONNECTIONS.
8. INSTALL 4–INCH SCHEDULE 40 GALVANIZED STEEL PIPE MANIFOLD WITH THREADED CONNECTIONS.
9. INSTALL SCHEDULE 40 GALVANIZED STEEL PIPE REDUCER AND UNION.
10. INSTALL SCHEDULE 40 GALVANIZED STEEL PIPE ELBOW.
11. INSTALL SCHEDULE 40 GALVANIZED STEEL PIPE TEE.
12. INSTALL SPRAYFIELD PIPE SUPPORT AND SPRINKLER PER SHEET D1.12 AT 20–FOOT INTERVALS
13. INSTALL SPRAYFIELD PIPE SUPPORT AT EVERY MANIFOLD TEE PER SHEET D1.12.
14. POINT OF CONNECTION TO EXISTING PRESSURE LINE. CONNECT TO EXISTING PIPE USING BOLTED FLANGED OR THREADED CONNECTION.
15. INSTALL ISOLATION VALVE AT EACH MANIFOLD TEE AND LOWER MANIFOLD ELBOW MATCHING PIPE DIAMETER.

REGISTERED PROFESSIONAL ENGINEER
DAVID BARTON BROOKE
NO. 70417
CIVIL
STATE OF CALIFORNIA
100% DRAFT

20' 0 20' 40'
SCALE OF FEET

DESIGNED: D. BROOKE CADD: M. GARCIA TECH. REVIEW: J. BLOM DATE: 04/07/2022	SUB SHEET NO. C1.16	TITLE OF SHEET SPRAYFIELD BID OPTION REHABILITATION AMWWTP REHABILITATE ASH AND BUCKEYE WASTEWATER TREATMENT PLANTS SEQUOIA & KINGS CANYON NATIONAL PARKS	DRAWING NO. 102/177,507 PMIS/PKG NO. 317446 SHEET 37 OF 135

25/04/2022 12:59 MARIO GARCIA G:\CLIENTS\NPS\SEKI\317446\DRAWINGS\ASH MOUNTAIN DWGS\7_TREATMENT & DISPOSAL AMWWTP\37 – AMWWTP SPRAYFIELD BID OPTION.DWG

NOTES:

1. COORDINATE CONSTRUCTION OF NEW BUILDING WITH PHASING DRAWINGS PH1.1, PH1.2, AND PH1.3.
2. CONSTRUCT THE GENERATOR & CONTROL BUILDING. SEE A1.1–1.6 FOR DETAILS.
3. INSTALL 4" SEWER LINE AND CLEANOUT FROM THE BUILDING TO THE PRE–ANOXIC TANK.

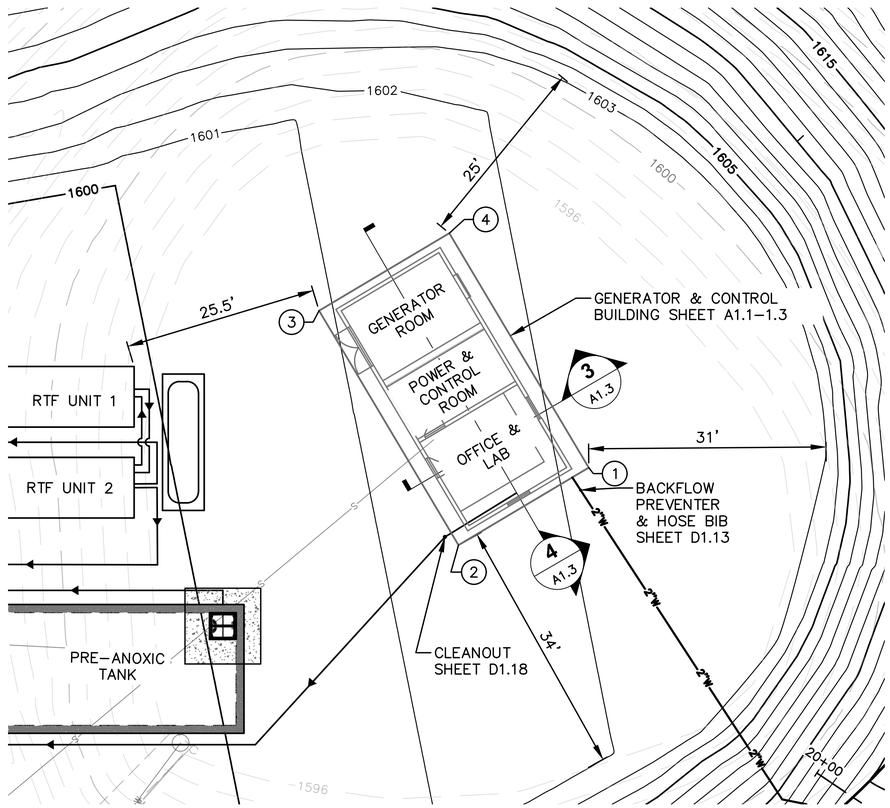

PLAN VIEW – GENERATOR & CONTROL BUILDING AMWWTP

COORDINATE TABLE				
POINT	NORTHING	EASTING	FG ELEV.	NOTE
GENERATOR & CONTROL BUILDING				
1	2061700.08	6611619.40	1595.30	FOUNDATION EDGE
2	2061689.8551	6611602.21	1595.30	FOUNDATION EDGE
3	2061720.79	6611583.80	1595.30	FOUNDATION EDGE
4	2061731.02	6611600.99	1595.30	FOUNDATION EDGE
CLEANOUT	2061690.92	6611600.41	1601.34	CENTER, FOR CONTROL BUILDING SEWER

REGISTERED PROFESSIONAL ENGINEER
DAVID BARTON BROOKE
NO. 70417
CIVIL
STATE OF CALIFORNIA
100% DRAFT

5' 0 5' 10'
SCALE OF FEET

DESIGNED: D. BROOKE DRAWN: M. GARCIA TECH. REVIEW: J. BLOM DATE: 04/07/2022	SUB SHEET NO. C1.17	TITLE OF SHEET GENERATOR & CONTROL BLDG AMWWTP REHABILITATE ASH AND BUCKEYE WASTEWATER TREATMENT PLANTS SEQUOIA & KINGS CANYON NATIONAL PARKS	DRAWING NO. 102 / 177,507 PMIS/PKG NO. 317446 SHEET 38 OF 135

06/04/2022 13:20 MARIO GARCIA G:\CLIENTS\NPS\SEKI\317446\DRAWINGS\ASH MOUNTAIN DWGS\7_TREATMENT & DISPOSAL AMWWTP\38 – AMWWTP CONTROLS & GENERATOR BLDG.DWG

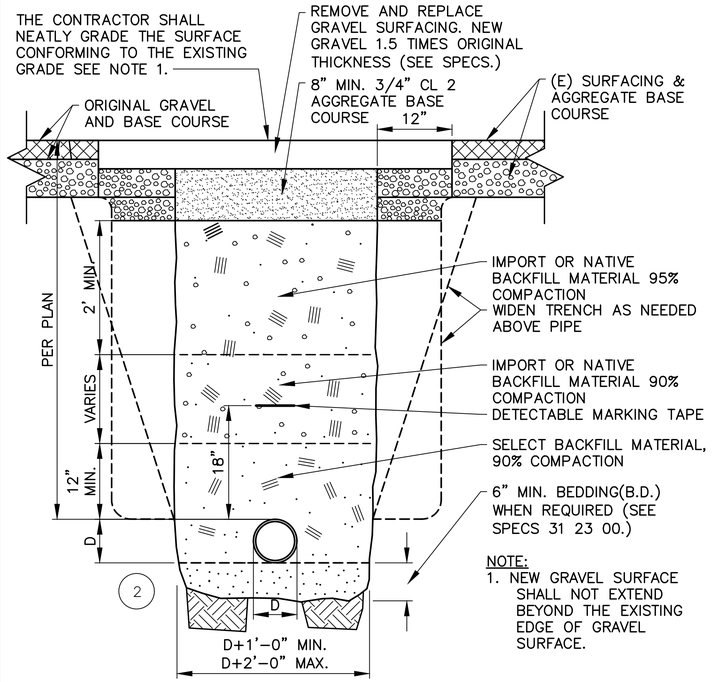

1 TYPICAL TRENCH DETAIL GRAVEL AREA
D1.1 SCALE: NTS

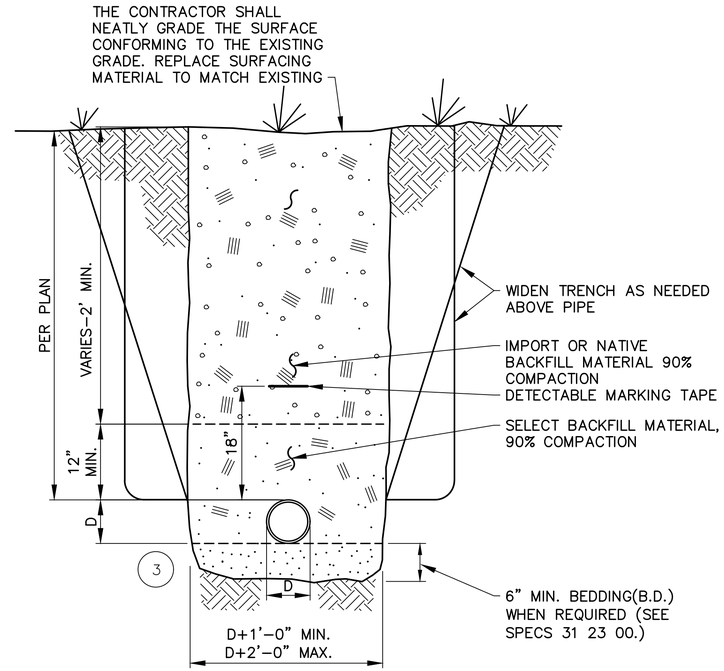

3 TYPICAL TRENCH DETAIL - OTHER AREAS
D1.1 SCALE: NTS

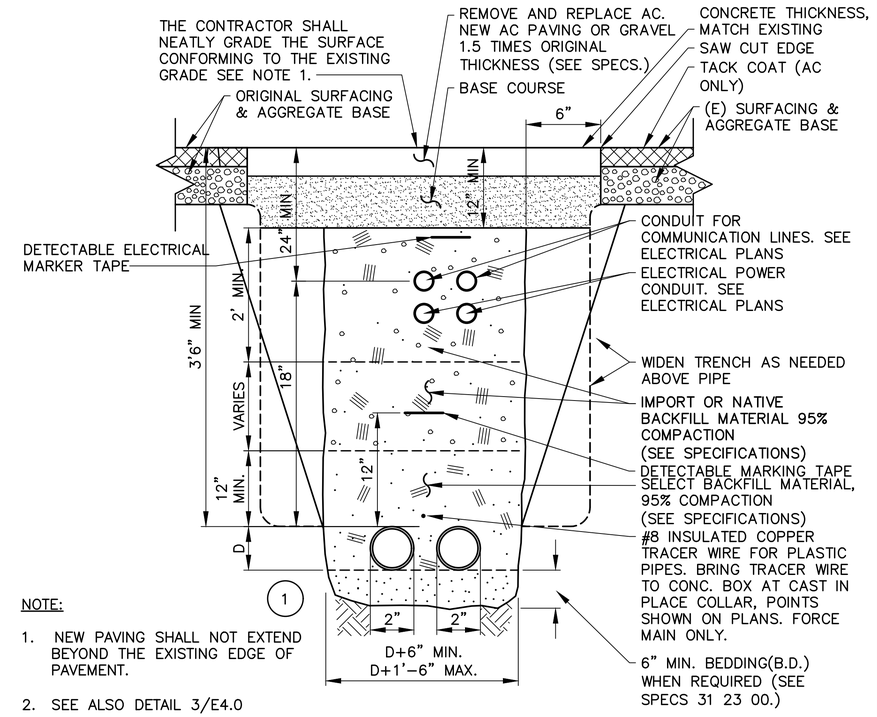

5 TYPICAL COMBINE TRENCH DETAIL - PAVED AREAS
D1.1 SCALE: NTS

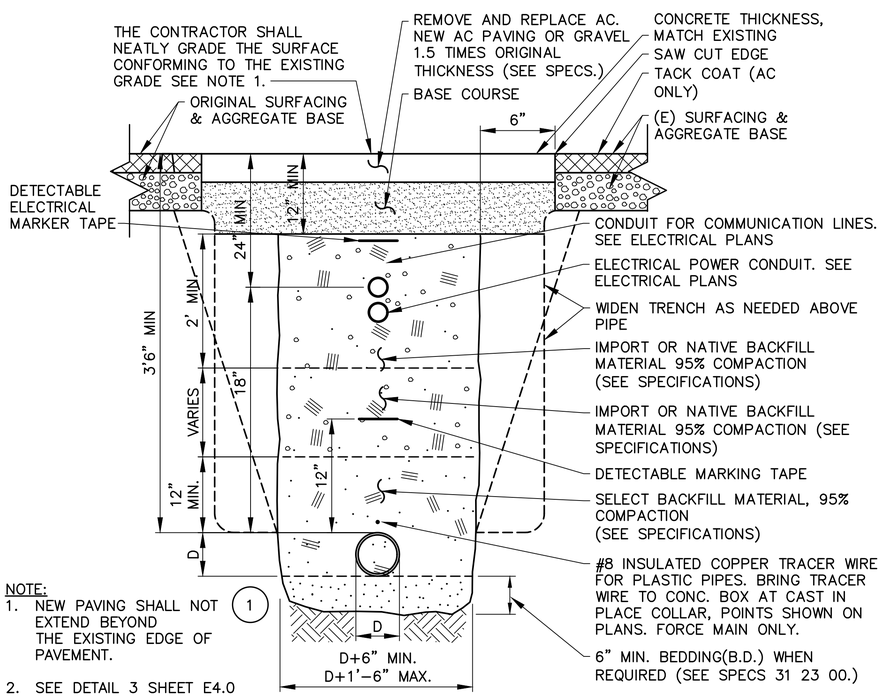

2 TYPICAL TRENCH DETAIL - PAVED AREAS
D1.1 SCALE: NTS

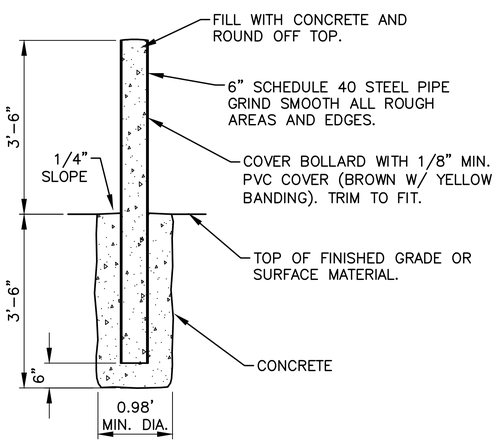

4 TYPICAL PIPE BOLLARD DETAIL
D1.1 SCALE: NTS

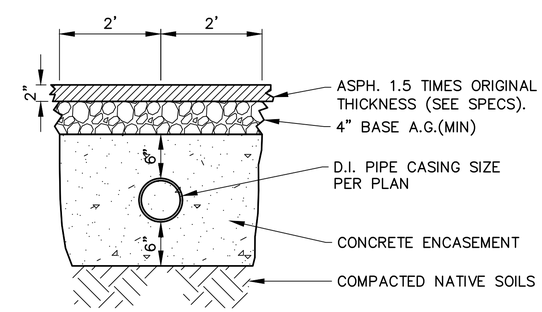

6 EFFLUENT LINE ENCASEMENT SECTION
D1.1 SCALE: NTS

REGISTERED PROFESSIONAL ENGINEER
DAVID BARTON BROOKE
NO. 72417
CIVIL
STATE OF CALIFORNIA
100% DRAFT

DESIGNED: D. BROOKE CADD M. GARCIA TECH. REVIEW: J. BLOM DATE: 04/07/2022	SUB SHEET NO. D1.1	TITLE OF SHEET GENERAL DETAILS AMWWTP REHABILITATE ASH AND BUCKEYE WASTEWATER TREATMENT PLANTS SEQUOIA & KINGS CANYON NATIONAL PARKS	DRAWING NO. 102 / 177,507 PMIS/PKG NO. 317446 SHEET 39 OF 135

18/04/2022 10:22 MARIO GARCIA G:\CLIENTS\NPS\SEK\317446\DRAWINGS\ASH MOUNTAIN DWGS\8_DETAIL SHEETS AMWWTP\39 - DETAILS GENERAL 1.DWG

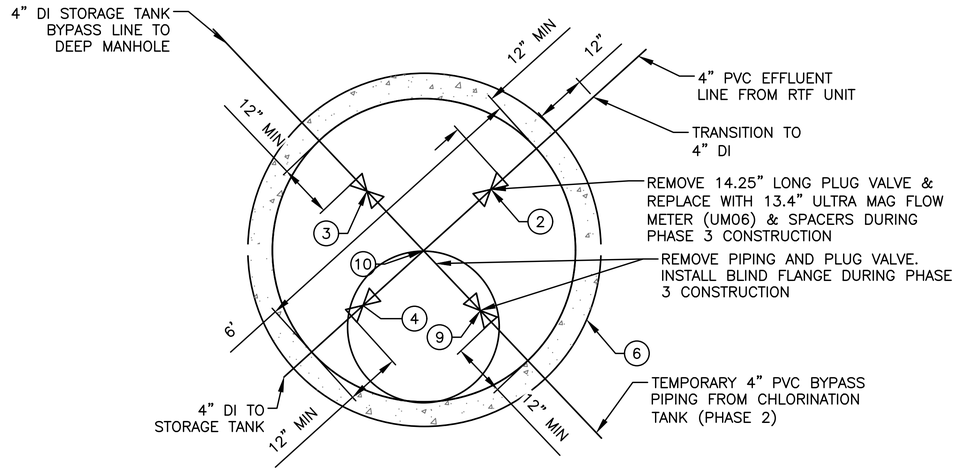

PLAN VIEW – SHALLOW TANK VAULT
NTS

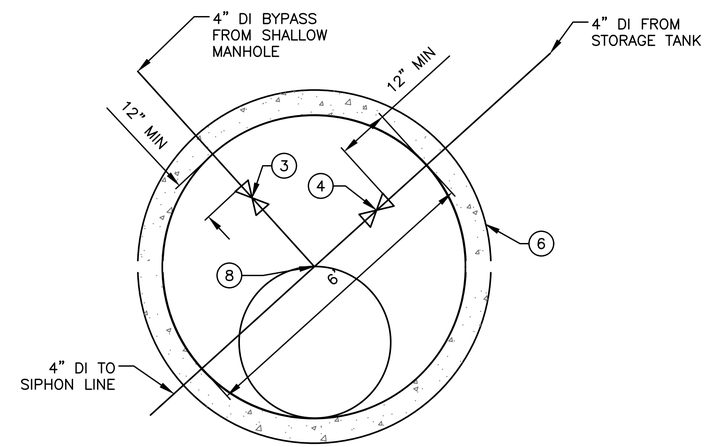

PLAN VIEW – DEEP TANK VAULT
NTS

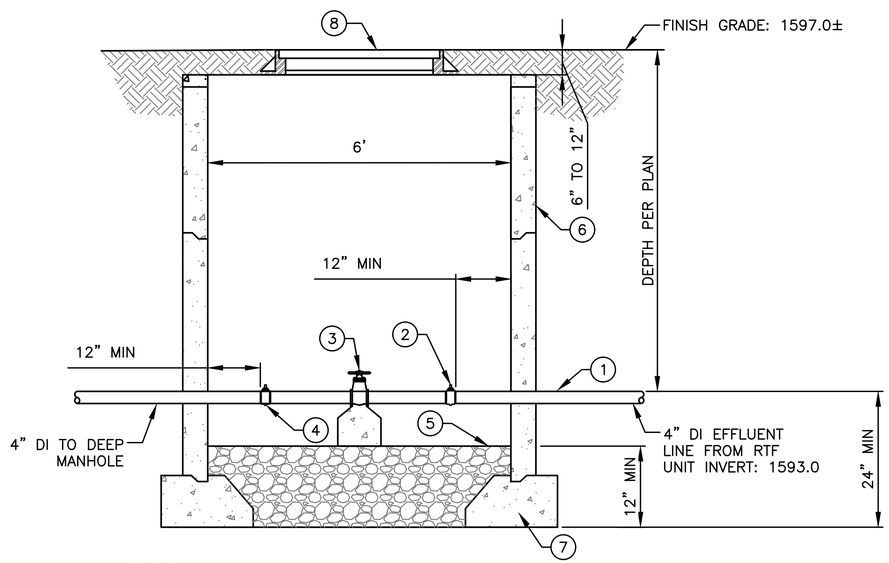

LEGEND

1. 4" DI INFLUENT LINE FROM RTF UNIT
2. 4" PLUG VALVE ON INFLUENT LINE (REPLACE WITH THE FLOW METER AT CONSTRUCTION PHASE 3)
3. 4" PLUG VALVE ON STORAGE TANK INLET LINE
4. 4" PLUG VALVE ON STORAGE TANK BYPASS LINE
5. ¾" – ½" WASHED GRAVE
6. 72"ø FLAT TOP MANHOLE. PRECAST SECTIONS TO CONFORM TO THE REQUREMENTS OF ASTM C–478
7. ANNULAR SHAPED CONCRETE BASE. CAST IN PLACE
8. DOUBLE LEAF 3' x 3' ACCESS HATCH
9. 4" PLUG VALVE ON BYPASS LINE FROM CHLORINATION TANK
10. 4" DI CROSSES

SECTION VIEW – SHALLOW TANK VAULT
NTS

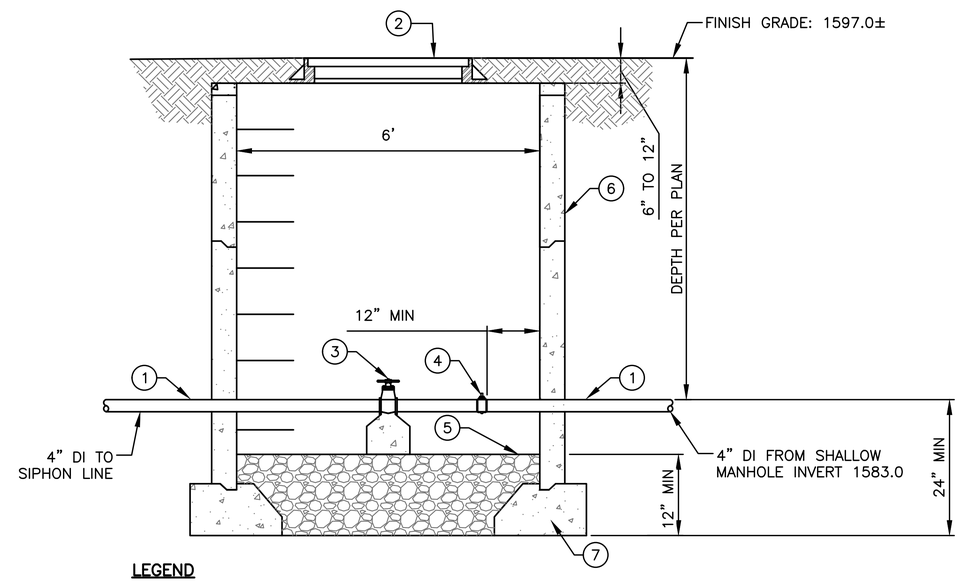

LEGEND

1. 4" PVC EFFLUENT LINE
2. DOUBLE LEAF 3' x 3' ACCESS HATCH
3. 4" PLUG VALVE ON STORAGE TANK OUTLET LINE
4. 4" PLUG VALVE ON STORAGE TANK BYPASS LINE
5. ¾" – ½" WASHED GRAVE
6. 72"ø FLAT TOP MANHOLE. PRECAST SECTIONS TO CONFORM TO THE REQUREMENTS OF ASTM C–478
7. ANNULAR SHAPED CONCRETE BASE. CAST IN PLACE
8. 4" DI TEE

SECTION VIEW – DEEP TANK VAULT
NTS

REGISTERED PROFESSIONAL ENGINEER
DAVID BARTON BROOKE
NO. 72417
100% DRAFT
CIVIL
STATE OF CALIFORNIA

DESIGNED: D. BROOKE CADD: M. GARCIA TECH. REVIEW: J. BLOM DATE: 04/07/2022	SUB SHEET NO. D1.2	TITLE OF SHEET GENERAL DETAILS AMWWTP REHABILITATE ASH AND BUCKEYE WASTEWATER TREATMENT PLANTS SEQUOIA & KINGS CANYON NATIONAL PARKS	DRAWING NO. 102/177,507 PMIS/PKG NO. 317446 SHEET 40 OF 135

25/04/2022 13:28 MARIO GARCIA G:\CLIENTS\NPS\SEKI\317446\DRAWINGS\ASH MOUNTAIN DWGS\8_DETAIL SHEETS AMWWTP\40 – DETAILS GENERAL 2.DWG

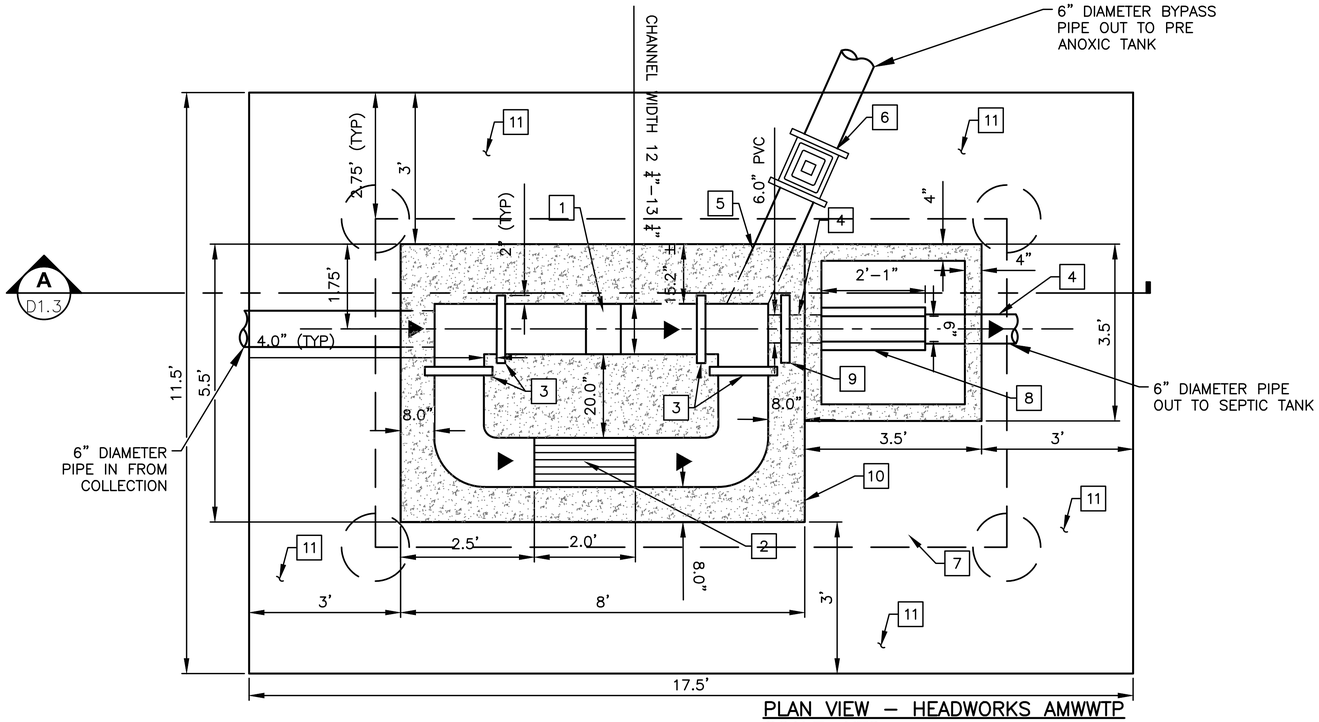

PLAN VIEW – HEADWORKS AMWWTP
SCALE: NTS

NOTES:

1. INSTALL ALL PARTS DESIGNATED UNDER KEYNOTES.
2. CONSTRUCT A 16.5' X 10' X 8' COVER OVER THE HEADWORKS AND FLUME VAULT.

KEY NOTES

1. INSTALL INLINE SEWER GRINDER: 2 HP MUFFIN MONSTER 10002–0008–DI OR EQUAL
2. MANUAL BAR SCREEN
3. 1' X 2' SLIDE & STOP GATES
4. 6" PVC
5. 8" PVC PLANT BYPASS
6. 8" PLUG VALVE IN THE VALVE BOX
7. OVERHEAD SHED PER DETAIL SHEET S1.12 THROUGH S1.15.
8. 6" PALMER–BOWLUS OPEN CHANNEL FLUME AND A ULTRASONIC FLOW METER
9. 1' X 2.5' SLIDE & STOP GATES
10. CONSTRUCT CAST IN PLACE CONCRETE HEADWORKS
11. CONSTRUCT 3' WIDE 4" THICK SIDEWALK AROUND ALL SIDES OF HEADWORKS. INSTALL #3 REBAR CENTER TO CENTER EACH WAY 12" APART. SLOPE 2% AWAY FROM STRUCTURE TO DRAIN.

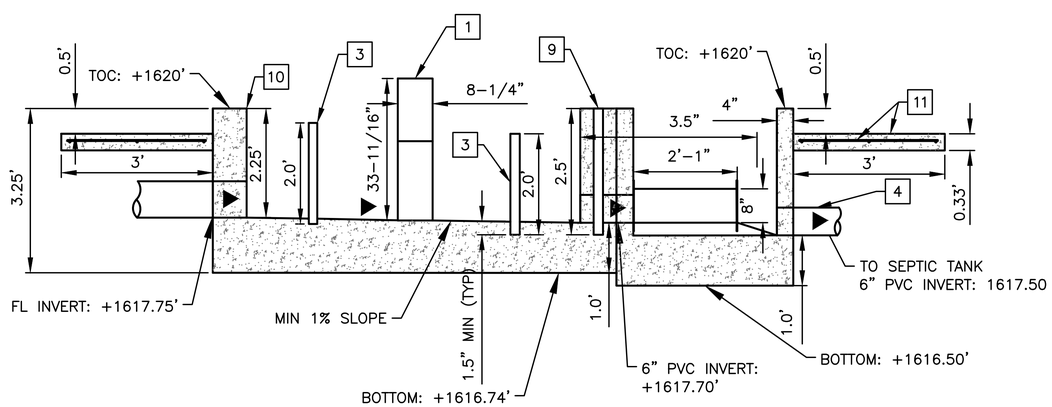

A SECTION
SCALE: NTS

REGISTERED PROFESSIONAL ENGINEER
DAVID BARTON BROOKE
NO. 70417
CIVIL
STATE OF CALIFORNIA
100% DRAFT

DESIGNED: D. BROOKE	SUB SHEET NO.	TITLE OF SHEET	DRAWING NO.
CADD M. GARCIA TECH. REVIEW: J. BLOM	D1.3	HEADWORKS AMWWTP REHABILITATE ASH AND BUCKEYE WASTEWATER TREATMENT PLANTS SEQUOIA & KINGS CANYON NATIONAL PARKS	102 / 177,507
DATE: 04/07/2022			PMIS/PKG NO. 317446
			SHEET 41 OF 135

26/04/2022 13:22 MARIO GARCIA G:\CLIENTS\NPS\SEK\317446\DRAWINGS\ASH MOUNTAIN DWGS\B_DETAIL SHEETS AMWWTP\41 – DETAILS HEADWORKS.DWG

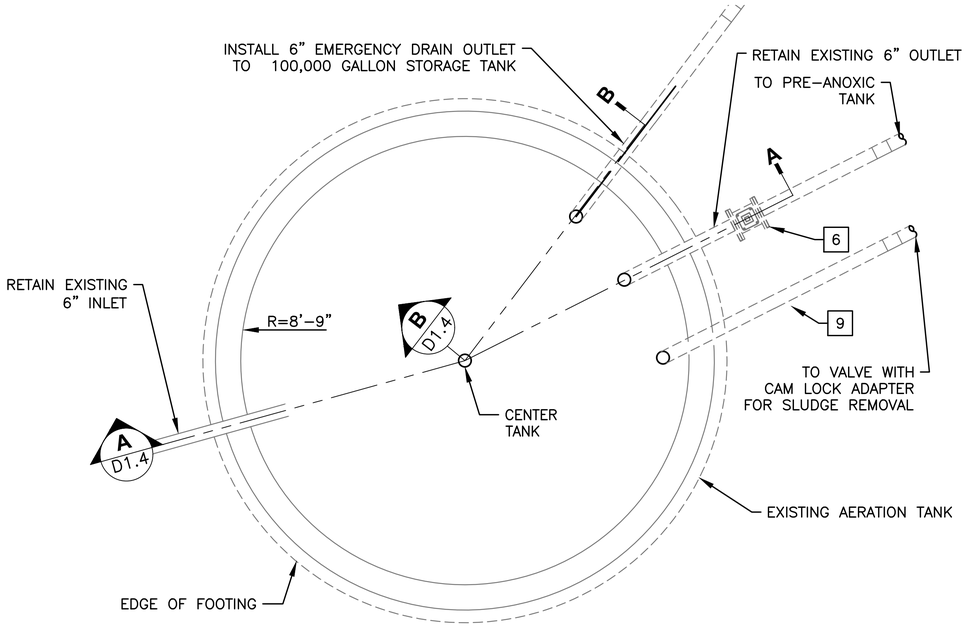

PLAN VIEW – PRIMARY TREATMENT TANK BASE BID IMPROVEMENTS AMWWTP

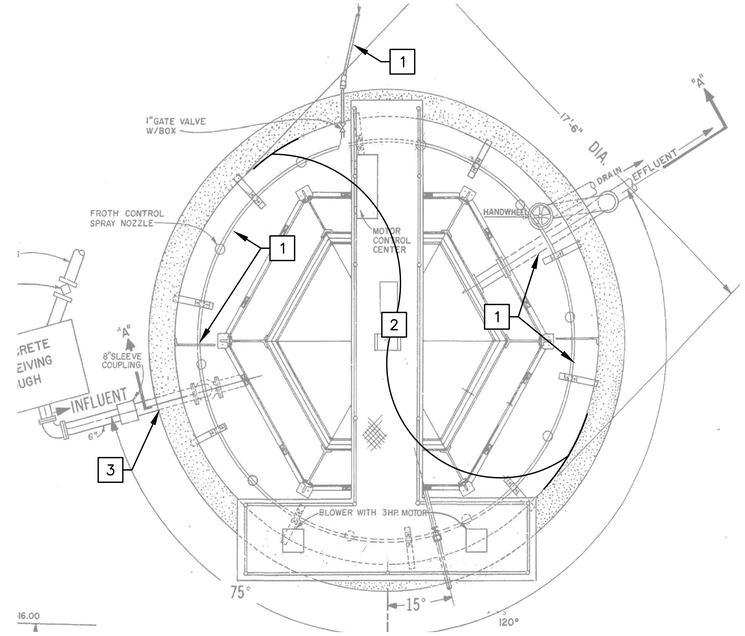

EXISTING / BASE BID PLAN

NOTES:

1. COORDINATE CONSTRUCTION OF NEW PRIMARY TREATMENT TANK WITH PHASING DRAWINGS PH1.1, PH1.2, AND PH1.3.

KEY NOTES:

1. RETAIN INTERIOR PIPING.
2. RETAIN ALL CLARIFIER EQUIPMENT.
3. RETAIN WALL AND FLOOR PENETRATIONS.
4. NOT USED.
5. NOT USED
6. REPLACE 6" ISOLATION VALVE.
7. RETAIN INLET PIPE AND CONNECT WITH NEW 6" INLET FROM HEADWORKS
8. NOT USED.
9. INSTALL 6" LINE TO VALVE WITH CAMLOCK FOR SLUDGE REMOVAL PER DETAIL SHEET D1.19. (BASE BID ONLY) (1 / D1.19)
10. INSTALL 6" CIP AND 6" PLUG VALVES FOR EMERGENCY BYPASS AND DRAIN TO 100,000 GALLON STORAGE TANK.

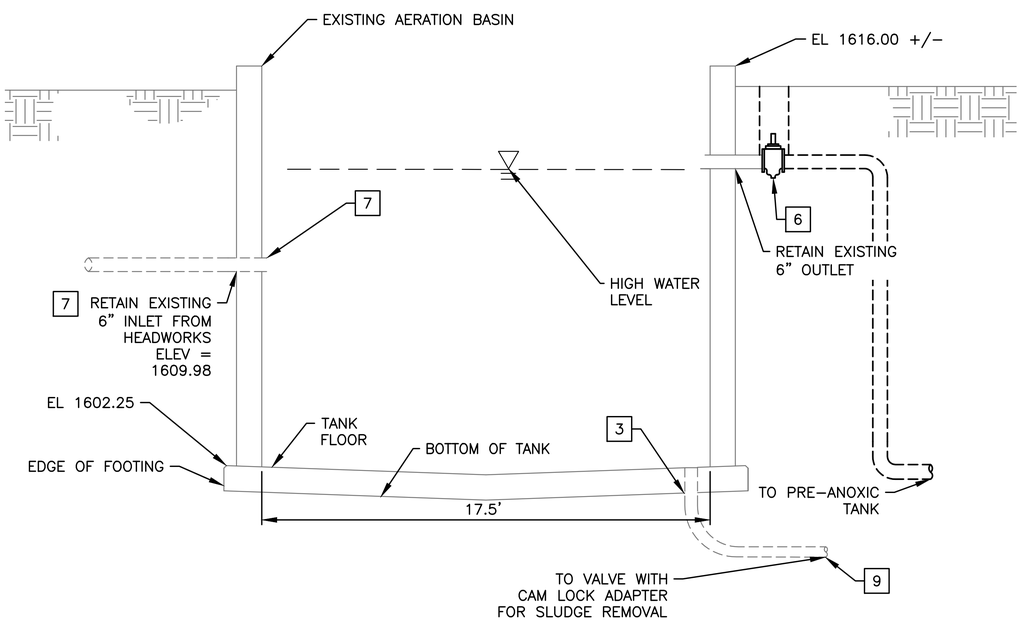

SECTION A–A – PRIMARY TREATMENT TANK BASE BID IMPROVEMENTS AMWWTP

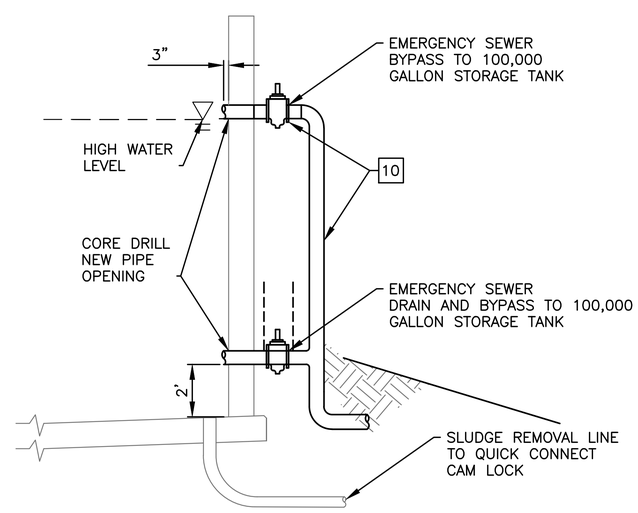

SECTION B–B – PRIMARY TREATMENT TANK EMERGENCY BYPASS & DRAIN

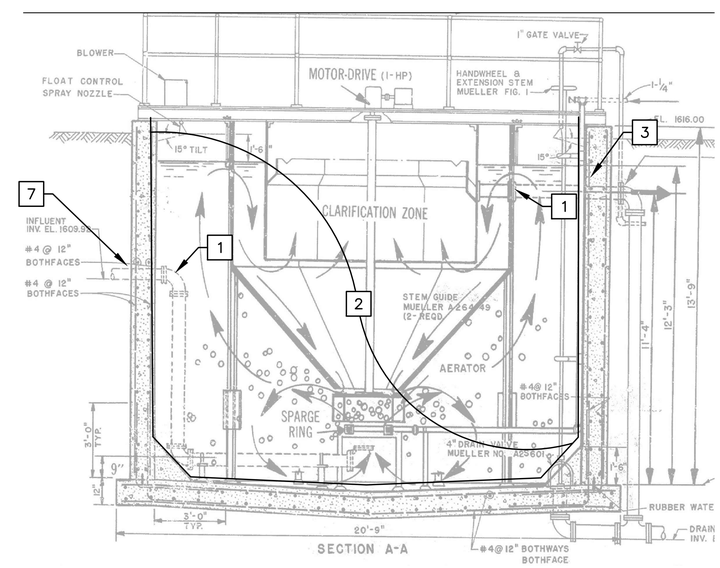

EXISTING / BASE BID SECTION

REGISTERED PROFESSIONAL ENGINEER DAVID BARTON BROOKE NO. 72417 CIVIL STATE OF CALIFORNIA 100% DRAFT

DESIGNED: D. BROOKE	SUB SHEET NO.	TITLE OF SHEET	DRAWING NO.
CADD M. GARCIA	D1.4	PRIMARY TREATMENT TANK AMWWTP	102 / 177,507
TECH. REVIEW: J. BLOM		REHABILITATE ASH AND BUCKEYE WASTEWATER TREATMENT PLANTS SEQUOIA & KINGS CANYON NATIONAL PARKS	PMIS/PKG NO. 317446
DATE: 04/07/2022			SHEET 42 OF 135

25/04/2022 17:02 MARIO GARCIA G:\CLIENTS\NPS\SEK\317446\DRAWINGS\ASH MOUNTAIN DWGS\8_DETAIL SHEETS AMWWTP\42 - DETAILS PRIMARY TREATMENT BASE BID.DWG

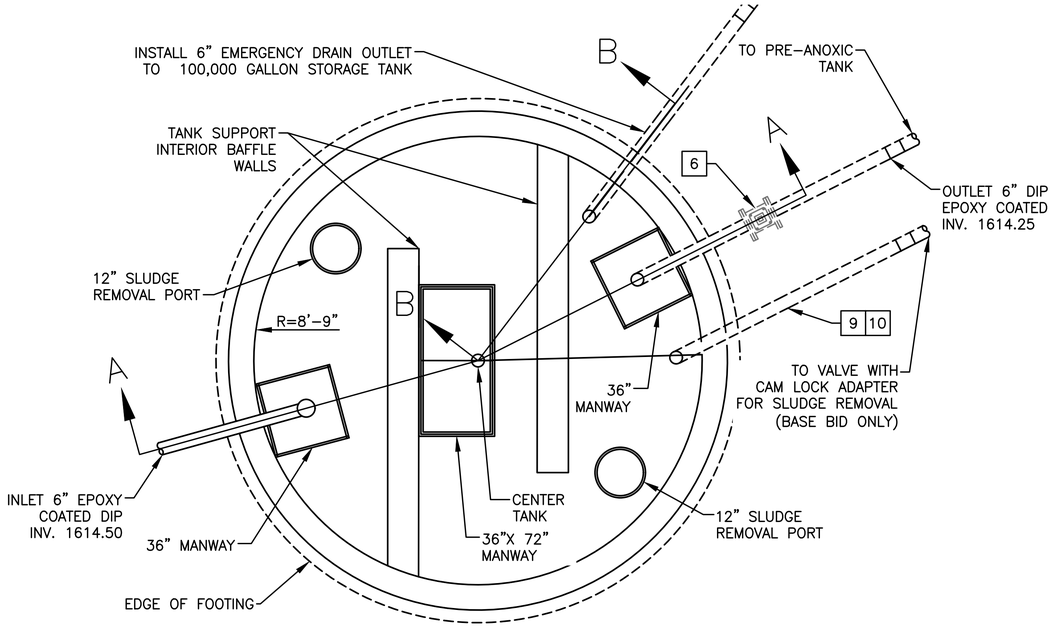

PLAN VIEW – PRIMARY TREATMENT TANK AMWWTP

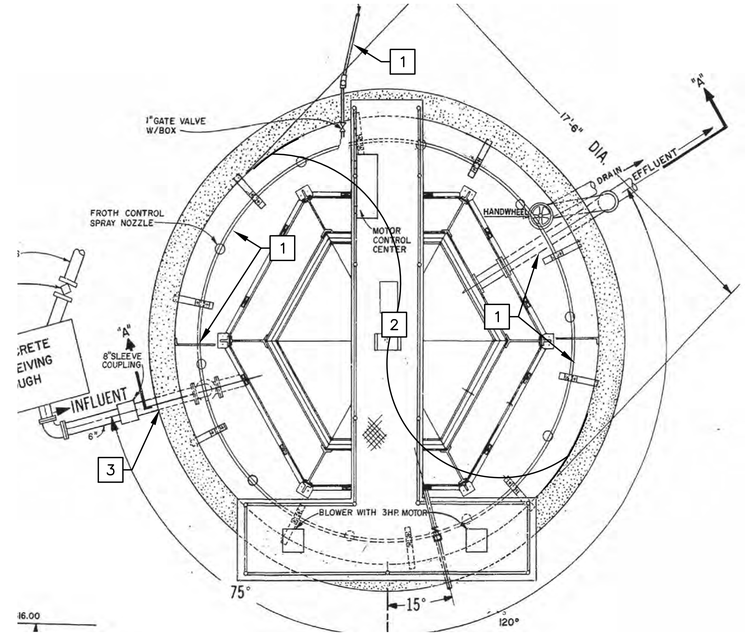

EXISTING / DEMO PLAN BID OPTION

NOTES:

1. COORDINATE CONSTRUCTION OF NEW PRIMARY TREATMENT TANK WITH PHASING DRAWINGS PH1.1, PH1.2, AND PH1.3.

KEY NOTES:

1. REMOVE INTERIOR PIPING.
2. REMOVE ALL CLARIFIER EQUIPMENT.
3. RETAIN WALL PENETRATIONS.
4. SEAL WALL PENETRATION. (5 / D1.19)
5. CORE – DRILL NEW WALL PENETRATION.
6. REPLACE 6" ISOLATION VALVE.
7. INSTALL 6" SEPTIC TANK INLET PIPE AND CONNECT WITH EXISTING 6" INLET FROM HEADWORKS
8. CORE DRILL TO INSTALL 6" SEPTIC TANK OUTLET PIPE.
9. INSTALL 6" LINE TO VALVE WITH CAMLOCK FOR SLUDGE REMOVAL PER DETAIL SHEET D1.XXX. (BASE BID ONLY)
10. REMOVE ABANDON AND PLUG 6" SLUDGE REMOVAL LINE.(BID OPTION ONLY)
11. INSTALL 6" CIP AND 6" PLUG VALVES FOR EMERGENCY BYPASS AND DRAIN TO 100,000 GALLON STORAGE TANK.

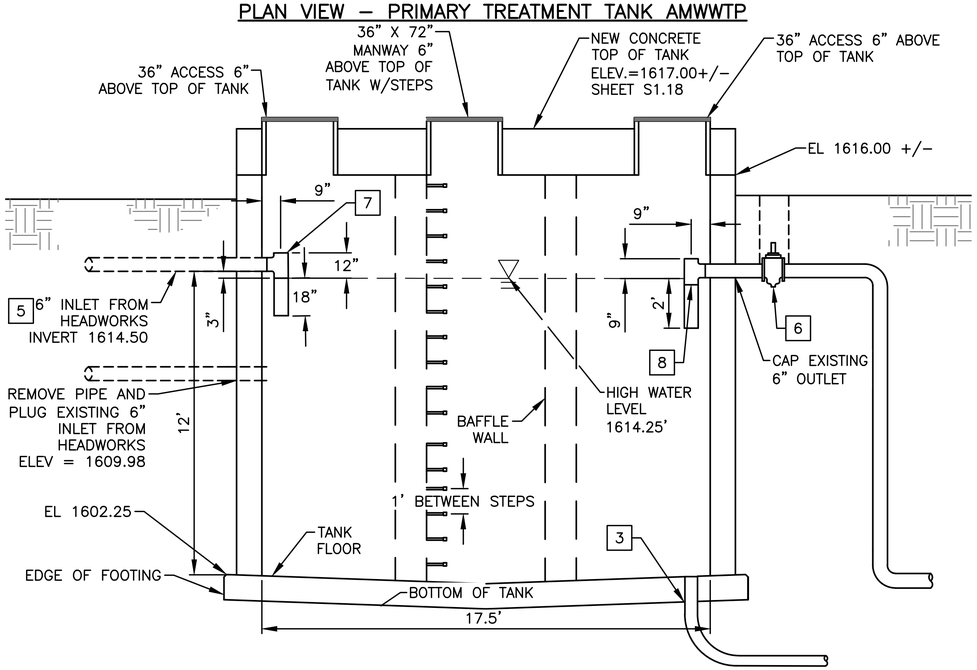

SECTION A–A – PRIMARY TREATMENT TANK AMWWTP

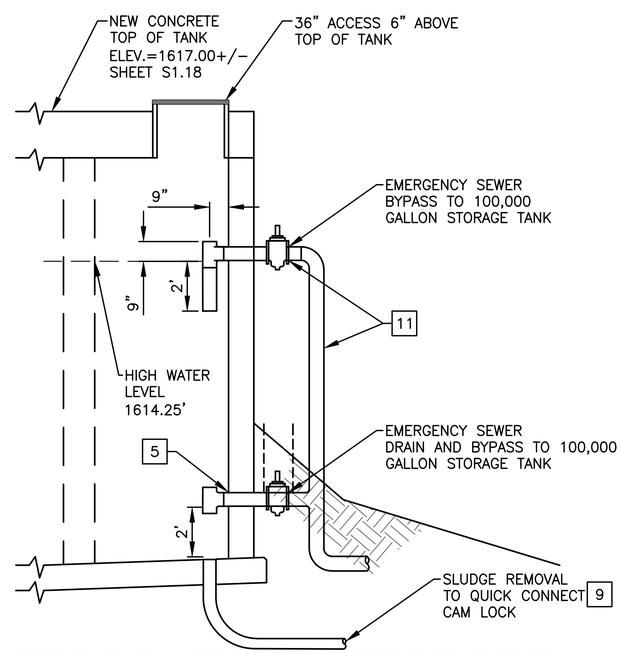

SECTION B–B – PRIMARY TREATMENT TANK AMWWTP

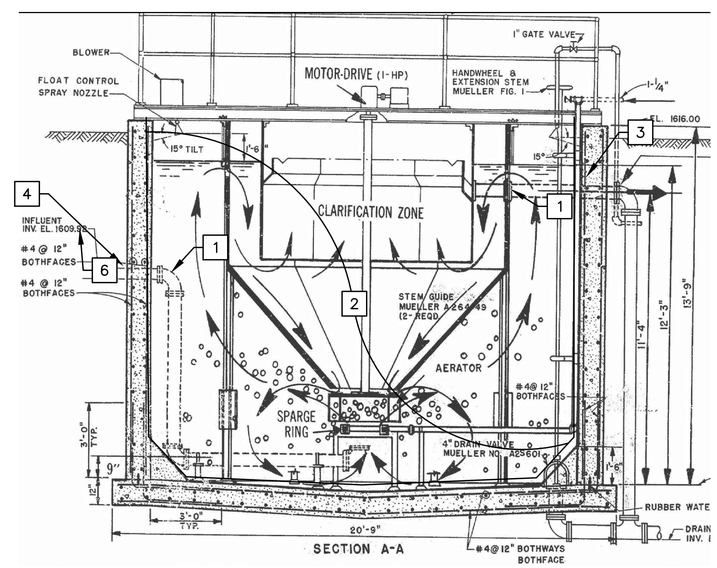

EXISTING / DEMO SECTION BID OPTION

REGISTERED PROFESSIONAL ENGINEER DAVID BARTON BROOKE NO. 5417 CIVIL STATE OF CALIFORNIA 100% DRAFT

DESIGNED: D. BROOKE CADD M. GARCIA TECH. REVIEW: J. BLOM DATE: 04/07/2022	SUB SHEET NO. D1.5	TITLE OF SHEET BID OPTION PRIMARY TREATMNT TANK AMWWTP REHABILITATE ASH AND BUCKEYE WASTEWATER TREATMENT PLANTS SEQUOIA & KINGS CANYON NATIONAL PARKS	DRAWING NO. 102 / 177,507 PMIS/PKG NO. 317446 SHEET 43 OF 135

26/04/2022 13:24 MARIO GARCIA G:\CLIENTS\NPS\SEK\317446\DRAWINGS\ASH MOUNTAIN DWGS\8_DETAIL SHEETS AMWWTP\43 - DETAILS PRIMARY TREATMENT BID OPTION.DWG

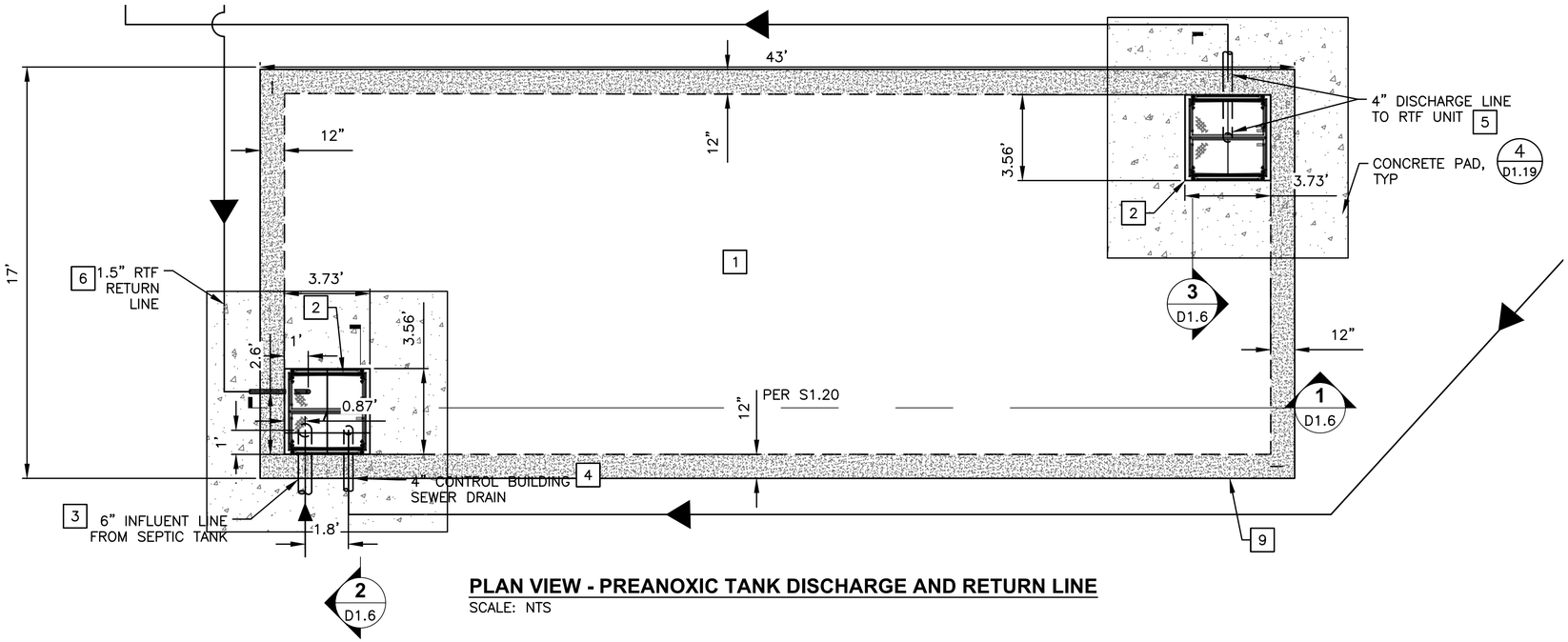

PLAN VIEW - PREANOXIC TANK DISCHARGE AND RETURN LINE

SCALE: NTS

KEY NOTES:

1. COORDINATE CONSTRUCTION OF NEW PRE-ANOXIC RETURN TANK WITH PHASING DRAWINGS PH1.1, PH1.2, AND PH1.3.
2. INSTALL TWO 3' X 3' H20 LOAD RATED ACCESS HATCHES WITH CLEARANCE TO LADDER AND CONCRETE PADS.
3. INSTALL 6" PVC INLET FROM SEPTIC TANK.THE INLET PIPING INVERT SHOULD BE 3" HIGHER THAN THE LIQUID LEVEL.
4. INSTALL 4" PVC INLET FROM CONTROL BUILDING SEWER DRAIN.
5. INSTALL 4" PVC DISCHARGE LINE TO RTF UNIT. THE OUTLET PIPING INVERT SHOULD BE SAME AS LIQUID LEVEL.
6. INSTALL 1.5" PVC RETURN LINE FROM RTF UNIT.
7. INSTALL 1 HP DISCHARGE PUMP (MODEL PF7510) AND PIPING TO CONNECT WITH 4" PVC DISCHARGE LINE UNDER THE ACCESS HATCH.
8. BACKFILL SOIL TO FINISH GRADE LEVEL.
9. SEE SHT. S1.20 FOR STRUCTURAL DETAILS.

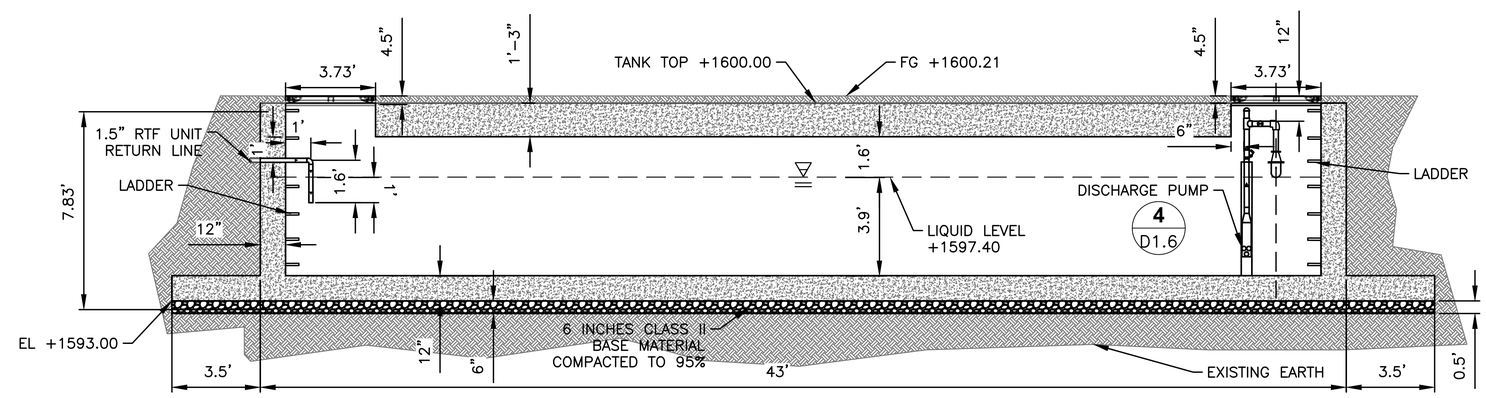

1 SECTION VIEW - PREANOXIC TANK DISCHARGE AND RETURN LINE

SCALE: NTS

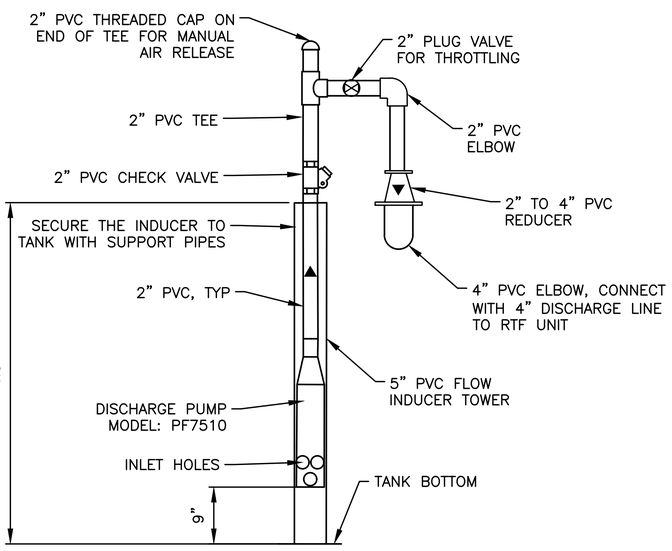

4 SECTION VIEW OF DISCHARGE PUMP

SCALE: NTS

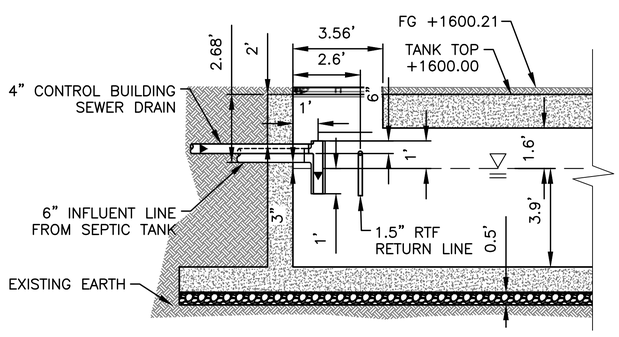

2 SECTION VIEW OF PREANOXIC TANK INLET AND RETURN LINE

SCALE: NTS

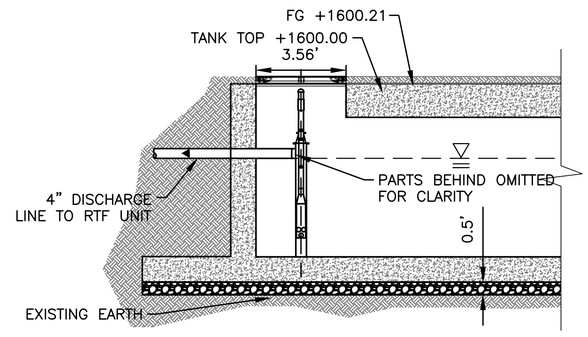

3 SECTION VIEW OF PREANOXIC TANK DISCHARGE LINE

SCALE: NTS

REGISTERED PROFESSIONAL ENGINEER
DAVID BARTON BROOKE
NO. 72417
CIVIL
STATE OF CALIFORNIA
100% DRAFT

DESIGNED: D. BROOKE CADD: M. GARCIA TECH. REVIEW: J. BLOM DATE: 04/07/2022	SUB SHEET NO. D1.6	TITLE OF SHEET PRE-ANOXIC RETURN TANK AMWWTP REHABILITATE ASH AND BUCKEYE WASTEWATER TREATMENT PLANTS SEQUOIA & KINGS CANYON NATIONAL PARKS	DRAWING NO. 102 / 177,507 PMIS/PKG NO. 317446 SHEET 44 OF 135

25/04/2022 17:02 MARIO GARCIA G:\CLIENTS\NPS\SEK\317446\DRAWINGS\ASH MOUNTAIN DWGS\8_DETAIL SHEETS AMWWTP\44 - DETAILS PREANOXIC RETURN TANK.DWG

Note: Spacing between AX-Max units is dependent on desired bury depth. Consult Orenco Engineering for details.

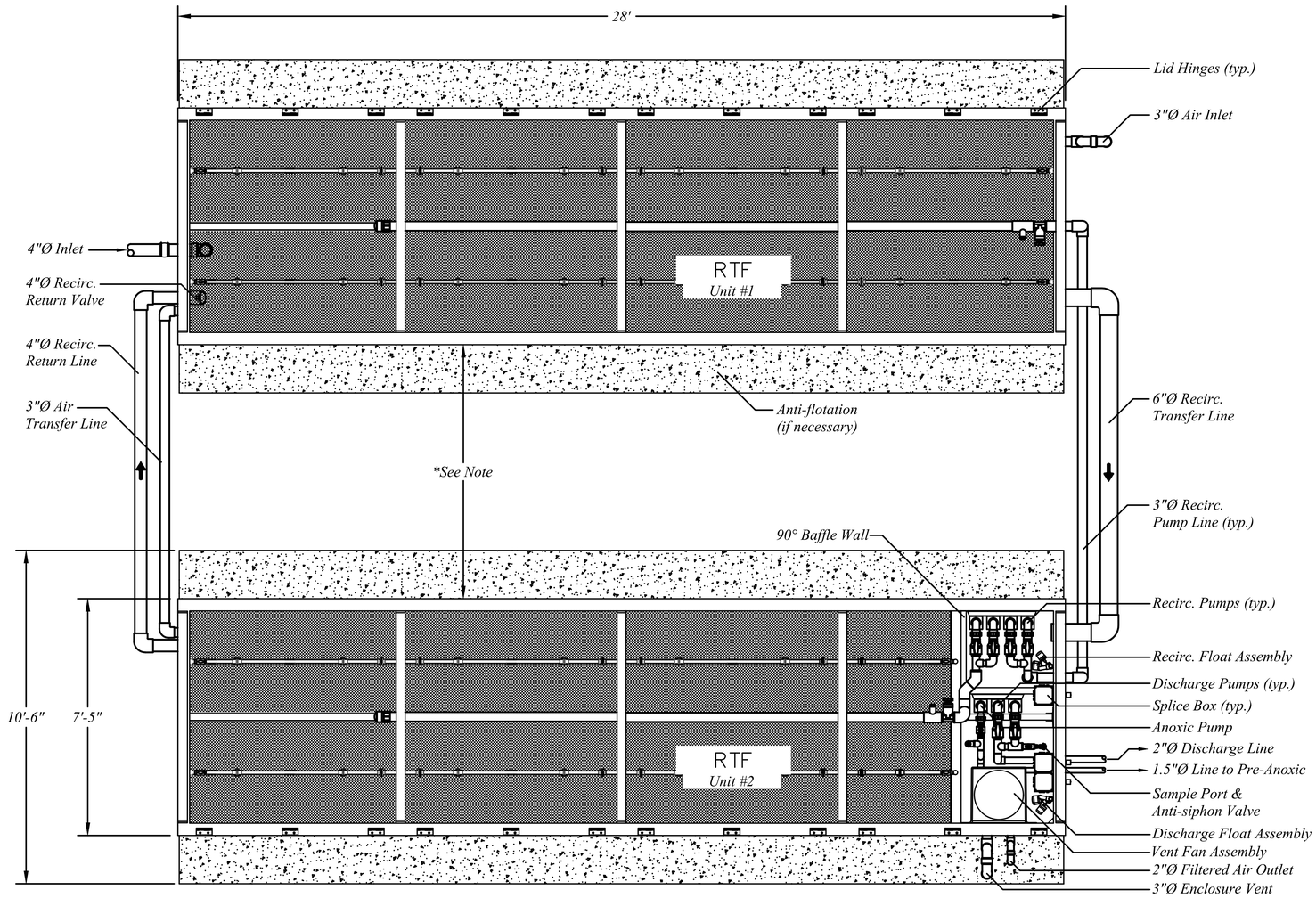

NOTE: RTF UNIT #1 BASIS OF DESIGN IS THE ORENCO AX-MAX 200-28
RTF UNIT #2 BASIS OF DESIGN IS THE ORENCO AX-MAX 175-28

PLAN VIEW – RTF TREATMENT SYSTEM
SCALE: NTS

REGISTERED PROFESSIONAL ENGINEER
DAVID BARTON BROOKE
NO. 70417
CIVIL
STATE OF CALIFORNIA
100% DRAFT

DESIGNED: D. BROOKE CADD: M. GARCIA TECH. REVIEW: J. BLOM DATE: 04/07/2022	SUB SHEET NO. D1.7	TITLE OF SHEET RTF TREATMENT SYSTEM REHABILITATE ASH AND BUCKEYE WASTEWATER TREATMENT PLANTS SEQUOIA & KINGS CANYON NATIONAL PARKS	DRAWING NO. 102 / 177,507 PMIS/PKG NO. 317446 SHEET 45 OF 135

25/04/2022 09:54 MARIO GARCIA G:\CLIENTS\NPS\SEK1\317446\DRAWINGS\ASH MOUNTAIN DWGS\8_DETAIL SHEETS AMWWTP\45 - DETAILS-SWR TREATMENT (AMAX DETAIL 1.6).DWG

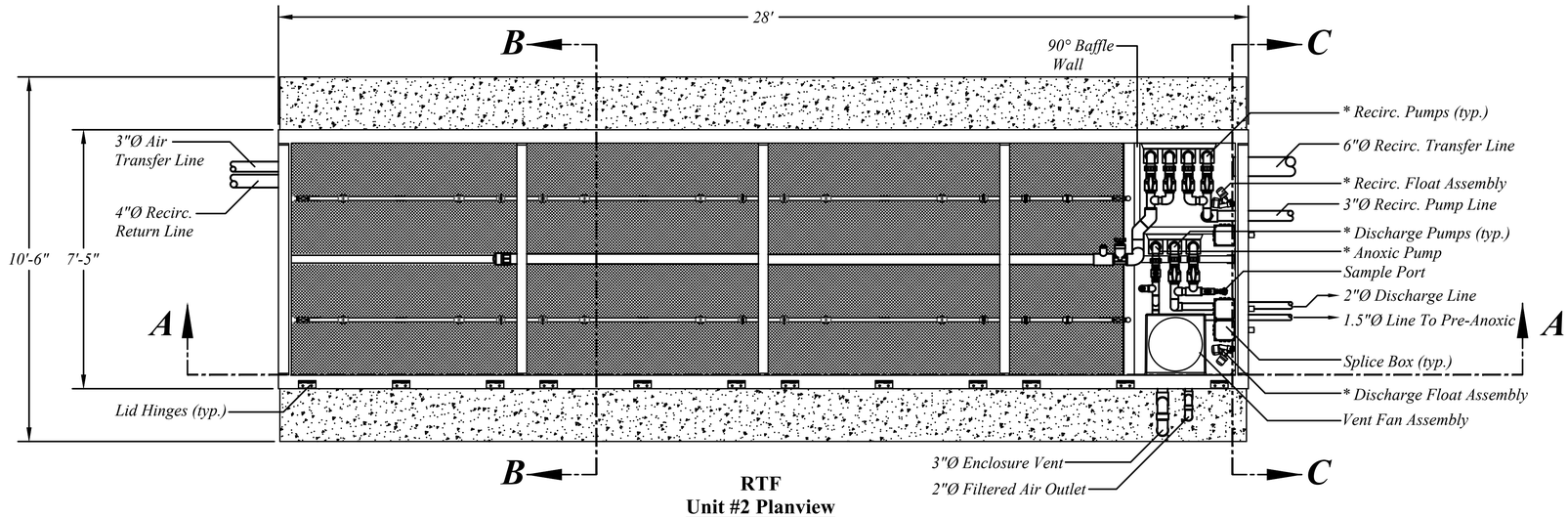

RTF
Unit #2 Planview
Scale: NTS

** Float Functions & Pump Index*

A	High Level Alarm / Lag Enable
B	Override Timer
C	Pump ON
D	Pump OFF
E	Redundant Off / Low Level Alarm

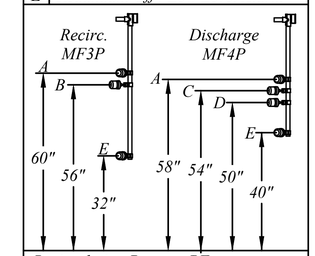

Recirculation Pumps: PF____
Discharge Pumps: PF____
Anoxic Return Pump: PF____

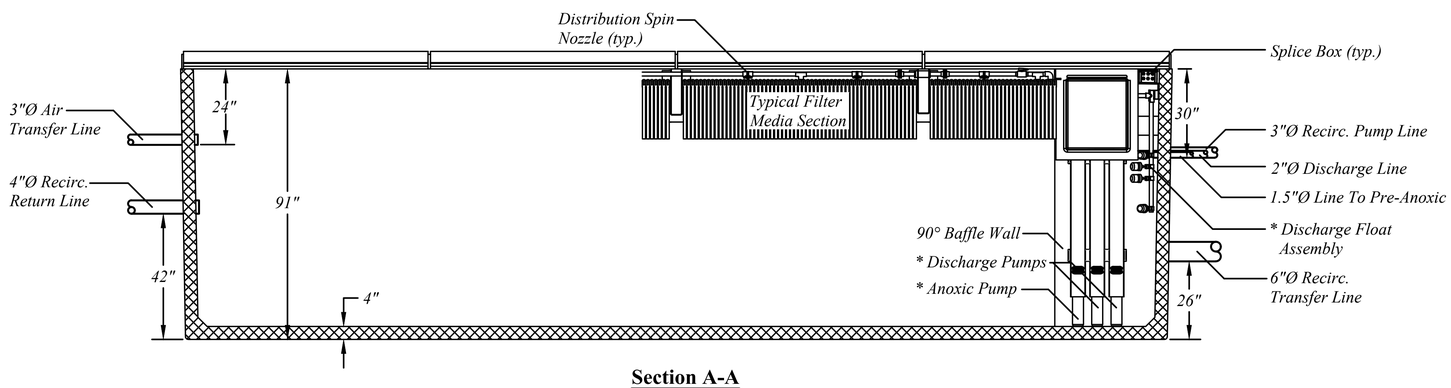

Section A-A
Scale: NTS

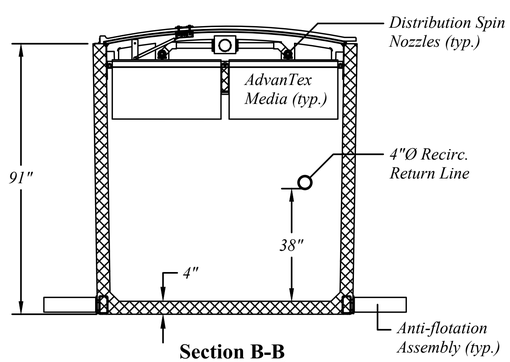

Section B-B
Scale: NTS

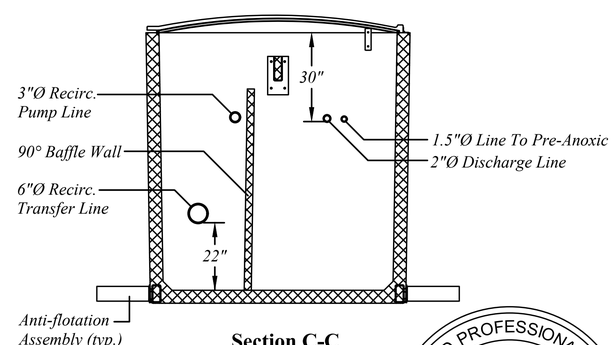

Section C-C
Scale: NTS

PLAN & SECTION VIEW – RTF TREATMENT SYSTEM
NTS

REGISTERED PROFESSIONAL ENGINEER
DAVID BARTON BROOKE
NO. 70417
CIVIL
STATE OF CALIFORNIA
100% DRAFT

DESIGNED: D. BROOKE	SUB SHEET NO.	TITLE OF SHEET	DRAWING NO.
CADD: M. GARCIA TECH. REVIEW: J. BLOM DATE: 04/07/2022	D1.8	RTF TREATMENT SYSTEM REHABILITATE ASH AND BUCKEYE WASTEWATER TREATMENT PLANTS SEQUOIA & KINGS CANYON NATIONAL PARKS	102 / 177,507 PMIS/PKG NO. 317446 SHEET 46 OF 135

25/04/2022 09:55 MARIO GARCIA G:\CLIENTS\NPS\SEK\317446\DRAWINGS\ASH MOUNTAIN DWGS\8_DETAIL SHEETS AMWWTP\46 - DETAILS-SWR TREATMENT (AMAX DETAIL 1.7).DWG

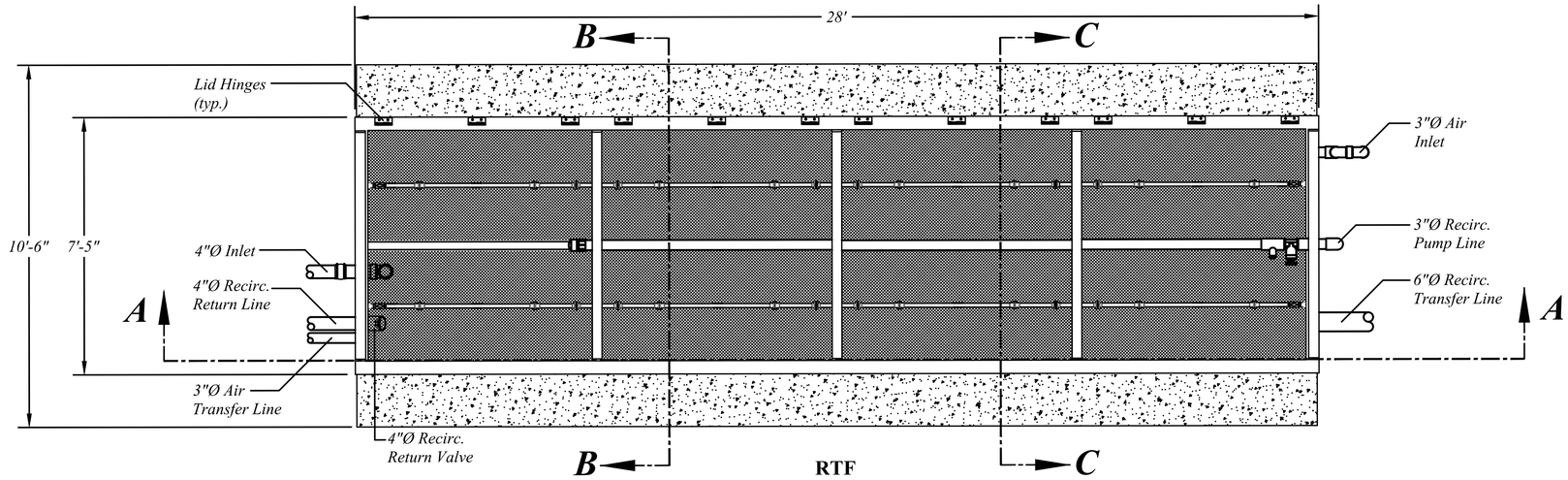

RTF
Unit #1 Planview
Scale: NTS

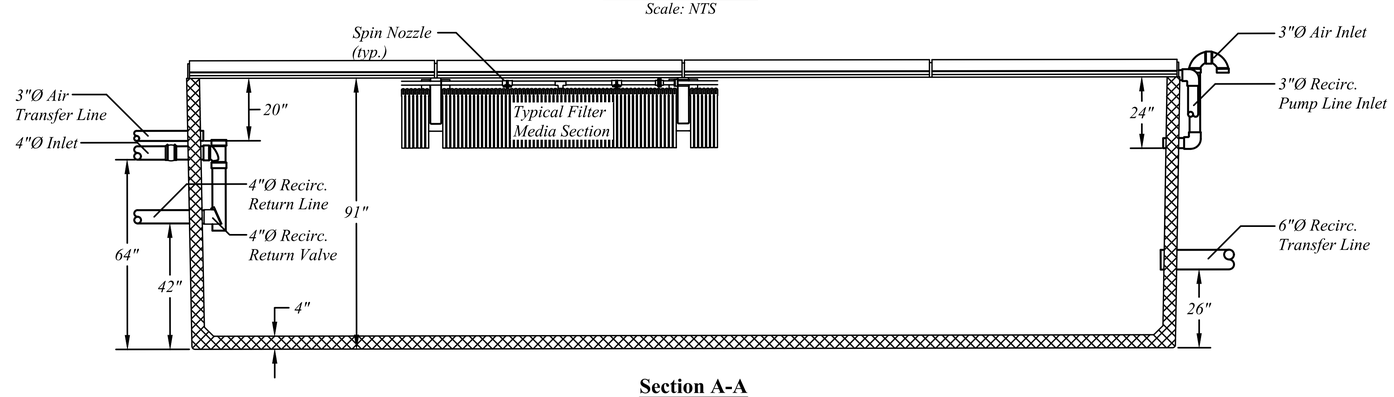

Section A-A
Scale: NTS

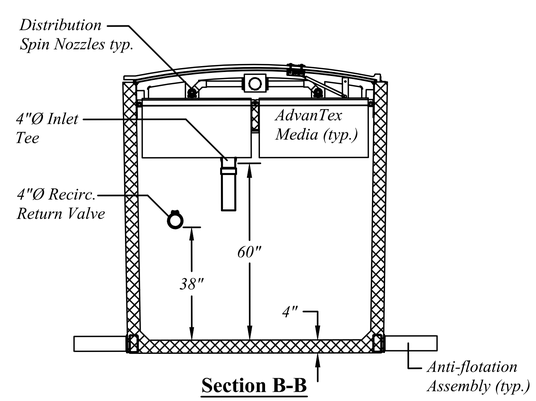

Section B-B
Scale: NTS

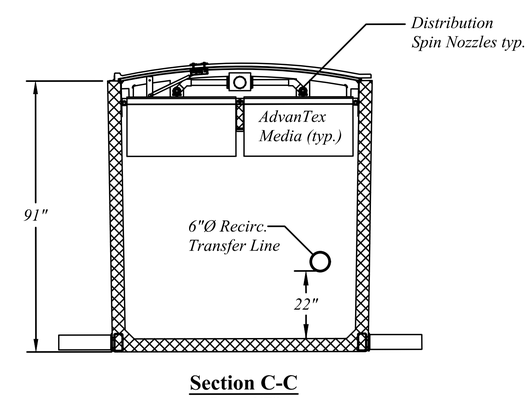

Section C-C
Scale: NTS

PLAN & SECTION VIEW – RTF TREATMENT SYSTEM
NTS

REGISTERED PROFESSIONAL ENGINEER
DAVID BARTON BROOKE
NO. 72417
CIVIL
STATE OF CALIFORNIA
100% DRAFT

DESIGNED: D. BROOKE CADD M. GARCIA TECH. REVIEW: J. BLOM DATE: 04/07/2022	SUB SHEET NO. D1.9	TITLE OF SHEET RTF TREATMENT SYSTEM REHABILITATE ASH AND BUCKEYE WASTEWATER TREATMENT PLANTS SEQUOIA & KINGS CANYON NATIONAL PARKS	DRAWING NO. 102 / 177,507 PMIS/PKG NO. 317446 SHEET 47 OF 135

25/04/2022 09:58 MARIO GARCIA G:\CLIENTS\NPS\SEK\317446\DRAWINGS\ASH MOUNTAIN DWGS\8_DETAIL SHEETS AMWWTP\47 – DETAILS-SWR TREATMENT (AMAX DETAIL 1.8).DWG

SHEET NOTES:

1. CONCRETE TANK DESIGN BY TANK MANUFACTURER SHALL SUPERSEDE TANK FOUNDATION PLAN AND DETAILS SHOWN, UPON ACCEPTANCE PER SUBMITTAL PROCEDURE.

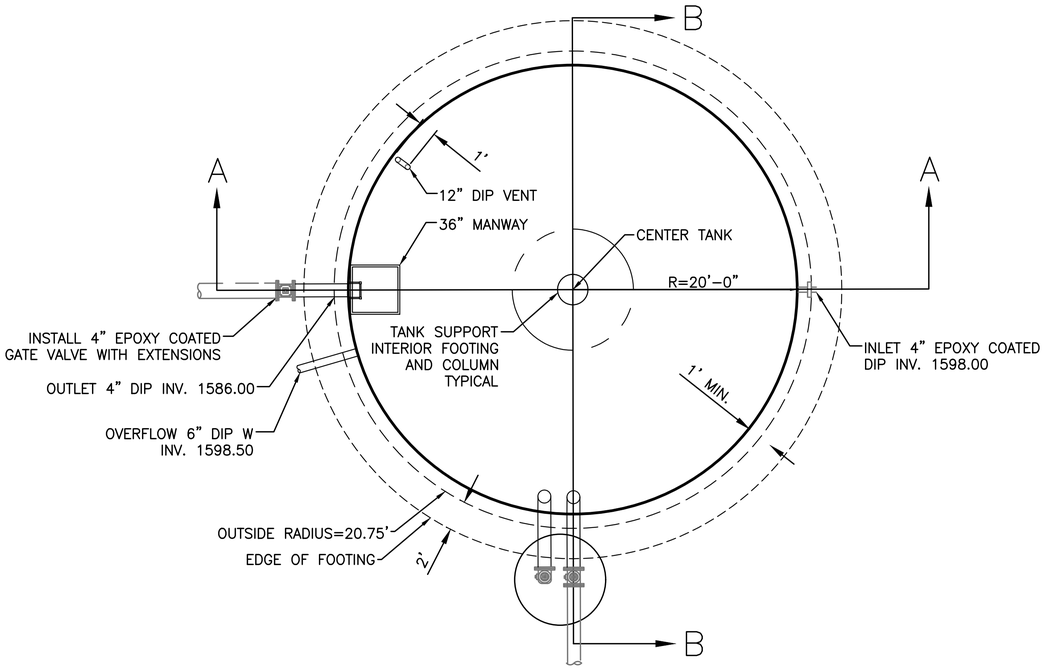

PLAN VIEW – AMWWTP 100,000 GALLON STORAGE TANK
NTS

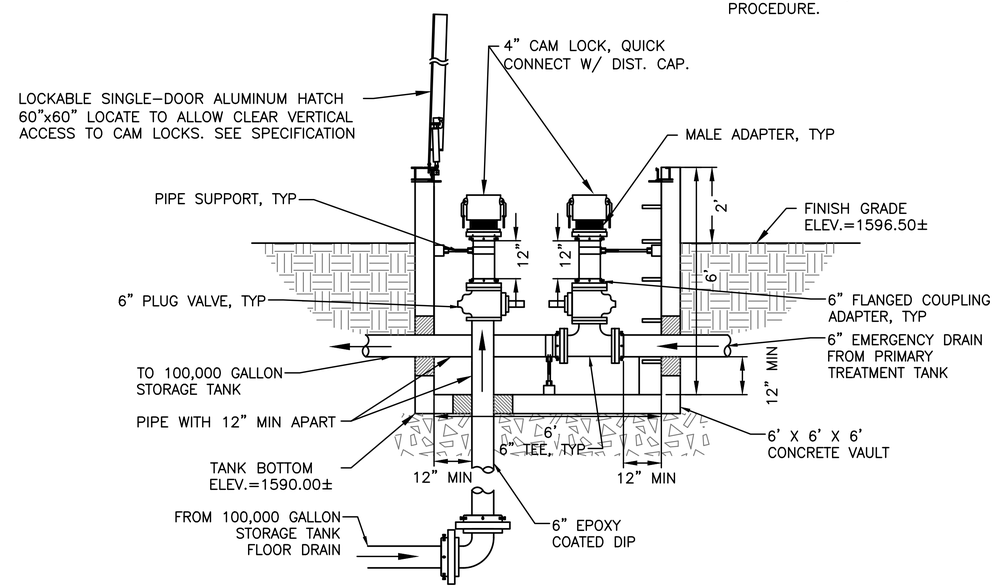

SECTION VIEW – EFFLUENT REMOVAL ACCESS VAULT
NTS

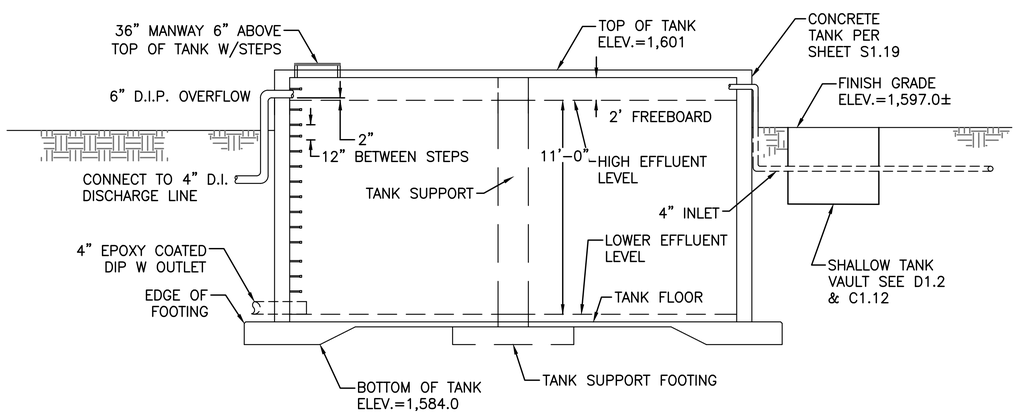

SECTION A–A – AMWWTP 100,000 GALLON STORAGE TANK
NTS

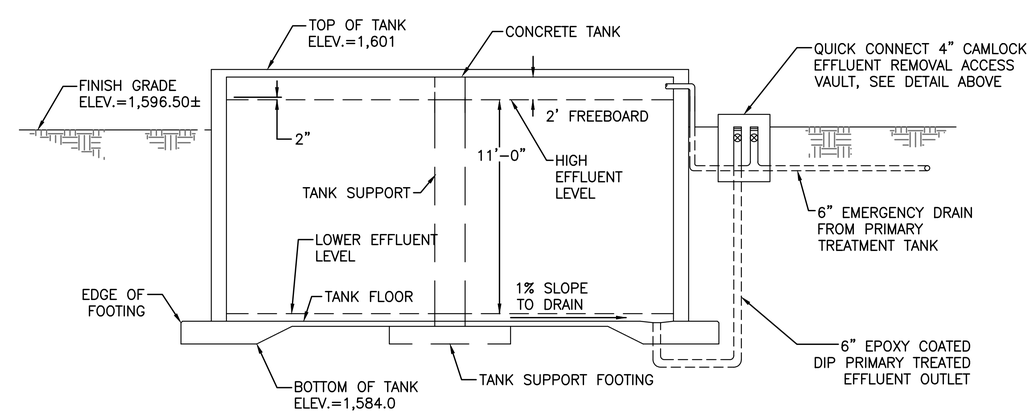

SECTION B–B – AMWWTP 100,000 GALLON STORAGE TANK
NTS

DESIGNED: D. BROOKE CADD M. GARCIA TECH. REVIEW: J. BLOM DATE: 04/07/2022	SUB SHEET NO. D1.10	TITLE OF SHEET AMWWTP 100 000 GALLON STORAGE TANK REHABILITATE ASH AND BUCKEYE WASTEWATER TREATMENT PLANTS SEQUOIA & KINGS CANYON NATIONAL PARKS	DRAWING NO. 102 / 177,507 PMIS/PKG NO. 317446 SHEET 48 OF 135

26/04/2022 13:19 MARIO GARCIA G:\CLIENTS\NPS\SEK\317446\DRAWINGS\ASH MOUNTAIN DWGS\8_DETAIL SHEETS AMWWTP\48 – DETAILS STORAGE TANK.DWG

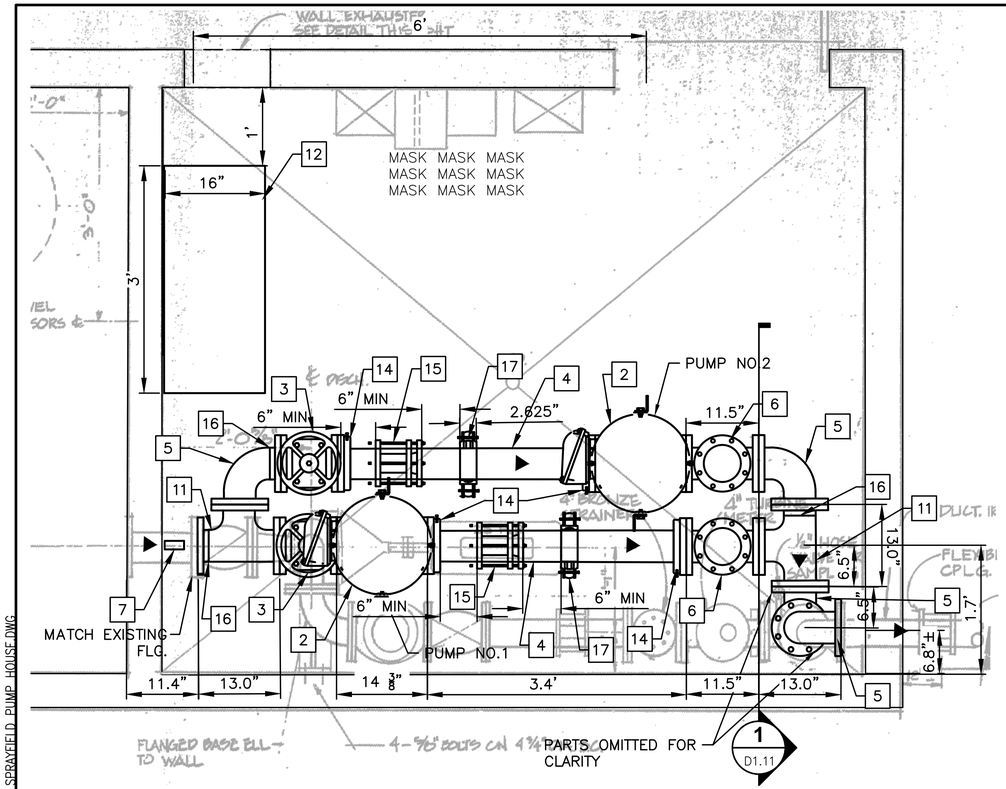

PLAN VIEW
NTS

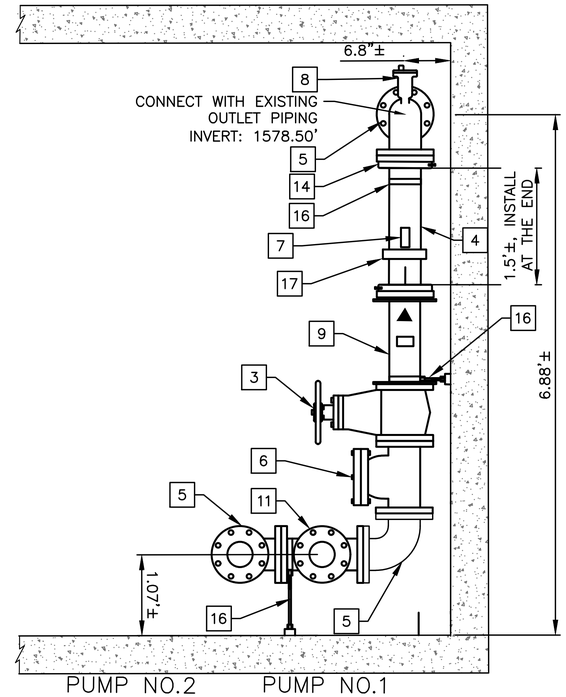

1 **SECTION VIEW OF PUMPS**
SCALE: NTS

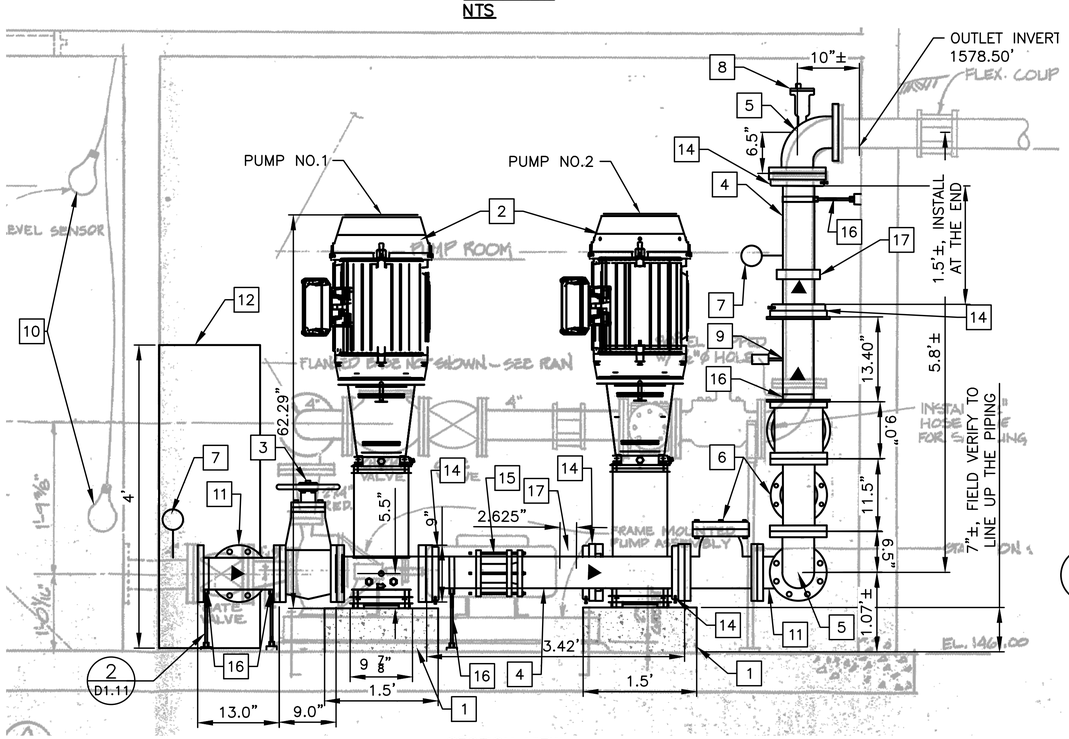

SECTION VIEW
NTS

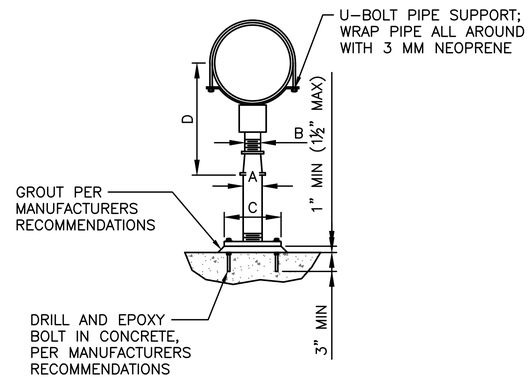

ADJUSTABLE PIPE SUPPORT APPROXIMATE DIMENSIONS IN INCHES					
PIPE SIZE	A	B	C	D MINIMUM	D MAXIMUM
3	3	2½	9	12	16
4	3	2½	9	14	18

2 **ADJUSTABLE PIPE SUPPORT WITH U BOLT**
SCALE: NTS

NOTES:

1. REMOVE PIPING, FLANGES, GATE VALVES, CHECK VALVE, BRONZE STRAINER, TURBINE METER, HOSE VALVE AND TWO EXISTING PUMPS AND CONCRETE BASE.
2. INSTALL TWO NEW PUMPS AND ACCESSORIES AS SHOWN IN KEYNOTES.
3. REPLACE FLOAT CONTROLS IN THE WET WELL AT SAME LOCATION.
4. REPLACE THE EXHAUSTING FAN AND REPAIR THE CONCRETE INSERT IF NEEDED.
5. REMOVE THE ELECTRICAL PANELS AND WIRE CONNECTIONS AND INSTALL NEW ONES OUTSIDE OF THE BUILDING.

KEY NOTES

1. 1.5' X 1.5' X 7" CONCRETE BASE, FIELD VERIFY THE HEIGHT TO LINE UP WITH PUMPS AND PIPING.
2. GRUNDFOS OR EQUAL HORIZONTAL MULTISTAGE END-SUCTION DUPLEX PUMPS (MODEL-CRN 64-4-1) WITH 4" SUCTION AND DISCHARGE PORTS.
3. 4" GATE VALVE
4. 4" DI PIPING
5. 90° 4" DI ELBOW
6. 4" SWING CHECK VALVE
7. PRESSURE GAUGE
8. AIR RELEASE AND VACUUM VALVE
9. 4" ULTRA MAG FLOW METER (300 PSI)
10. CONTROL LEVEL SENSOR/FLOAT
11. 4" DI TEE
12. ELECTRICAL PANELS
13. NEW EXHAUST FAN
14. 4" FLANGED COUPLING ADAPTER
15. 4" PIPE SPOOL
16. PIPE SUPPORT
17. PROCO 442-BD MOLDED PTFE EXPANSION JOINTS (185 PSIG)

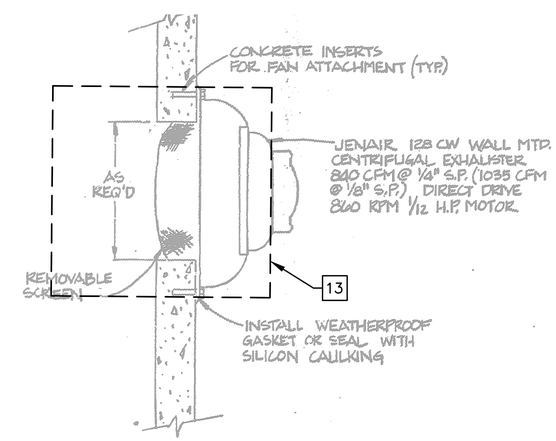

WALL EXHAUSTER DETAIL
NO SCALE

REGISTERED PROFESSIONAL ENGINEER
DAVID BARTON BROOKE
NO. 72417
CIVIL
STATE OF CALIFORNIA
100% DRAFT

DESIGNED: D. BROOKE CADD M. GARCIA TECH. REVIEW: J. BLOM DATE: 04/07/2022	SUB SHEET NO. D1.11	TITLE OF SHEET SPRAYFIELD PUMP HOUSE AMWWTP REHABILITATE ASH AND BUCKEYE WASTEWATER TREATMENT PLANTS SEQUOIA & KINGS CANYON NATIONAL PARKS	DRAWING NO. 102/177,507 PMIS/PKG NO. 317446 SHEET 49 OF 135

25/04/2022 09:44 MARIO GARCIA G:\CLIENTS\NPS\SEKI\317446\DRAWINGS\ASH MOUNTAIN DWGS\8 DETAIL SHEETS AMWWTP\49 - DETAILS SPRAYFIELD PUMP HOUSE.DWG

NOTES:

1. COORDINATE CONSTRUCTION OF NEW SPRAYFIELD WITH PHASING DRAWINGS PH1.1, PH1.2, AND PH1.3.
2. INSTALL PIPE SUPPORT BRACKET AND SPRINKLERS.
3. BURY PIPE SUPPORT BRACKET AND PIPE WITH SITE EARTH TO PROVIDE ADDITIONAL SUPPORT FROM POTENTIAL FALLING TREES.

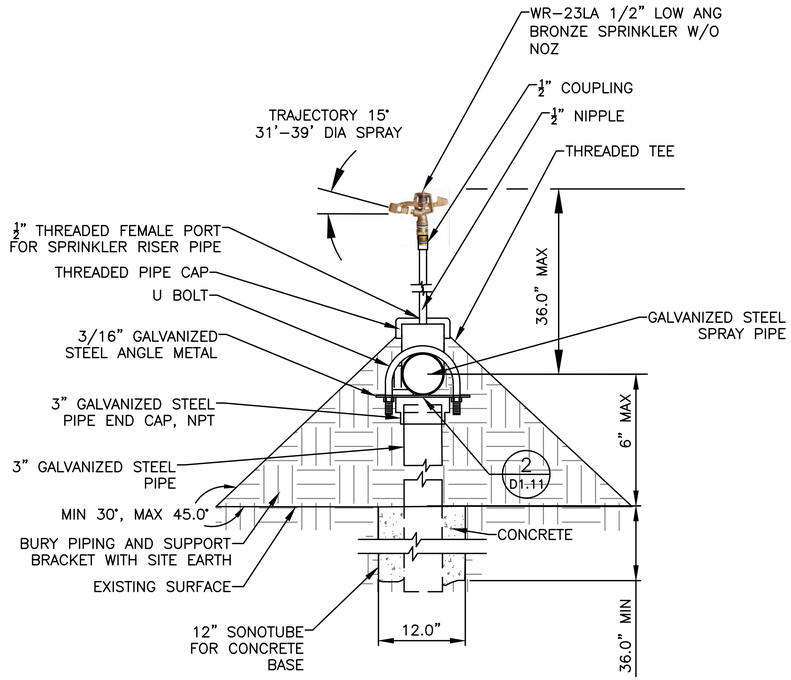

1 D1.12 PIPE SUPPORT BRACKET AND SPRINKLER PROFILE
NTS

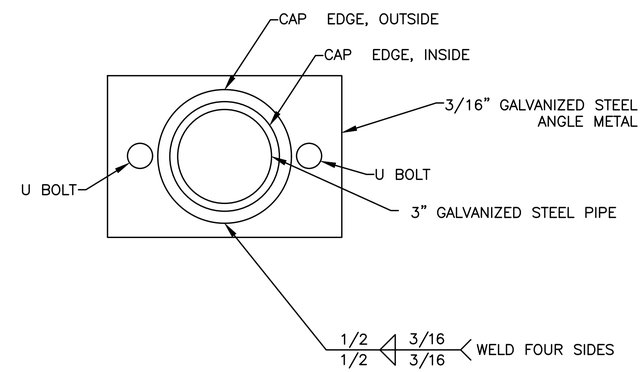

3 D1.12 WELDING DETAIL
NTS

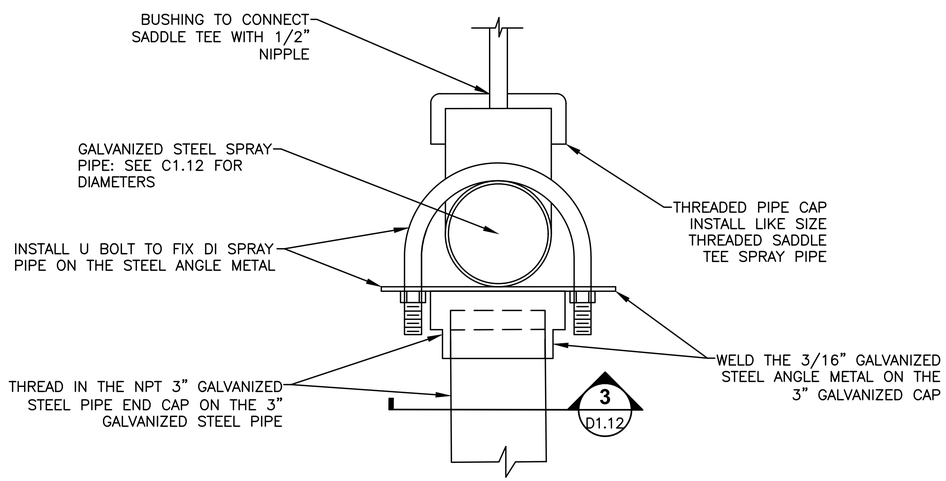

2 D1.12 PIPE SUPPORT BRACKET DETAIL
NTS

REGISTERED PROFESSIONAL ENGINEER
DAVID BARTON BROOKE
NO. 72417
100% DRAFT
CIVIL
STATE OF CALIFORNIA

DESIGNED: D. BROOKE CADD M. GARCIA TECH. REVIEW: J. BLOM DATE: 04/07/2022	SUB SHEET NO. D1.12	TITLE OF SHEET SPRAYFIELD AMWWTP REHABILITATE ASH AND BUCKEYE WASTEWATER TREATMENT PLANTS SEQUOIA & KINGS CANYON NATIONAL PARKS	DRAWING NO. 102 / 177,507 PMIS/PKG NO. 317446 SHEET 50 OF 135

25/04/2022 13:58 MARIO GARCIA G:\CLIENTS\NPS\SEK\317446\DRAWINGS\ASH MOUNTAIN DWGS\8_DETAIL SHEETS AMWWTP\50 - DETAILS SPRAYFIELD.DWG

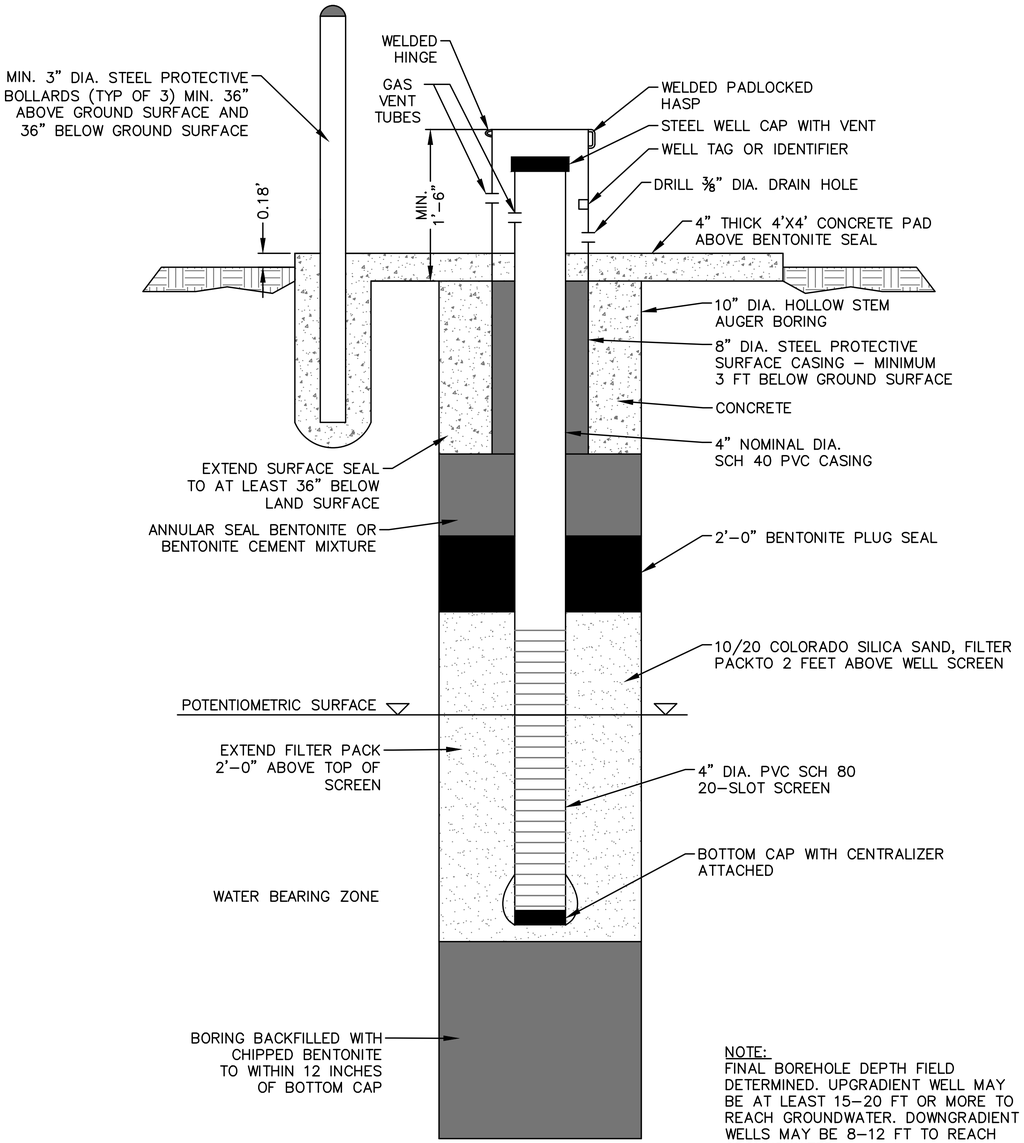

NOTE:
FINAL BOREHOLE DEPTH FIELD DETERMINED. UPGRADIENT WELL MAY BE AT LEAST 15–20 FT OR MORE TO REACH GROUNDWATER. DOWNGRADIENT WELLS MAY BE 8–12 FT TO REACH GROUNDWATER.

NOTE: DEPTH OF EACH WELL WILL VARY DEPENDING ON WHERE THE GROUND WATER SURFACE IS ENCOUNTERED SEE SPECIFICATIONS FOR GUIDANCE.

1 D1.13 BID OPTION – WELL SECTION AND DETAILS
NTS

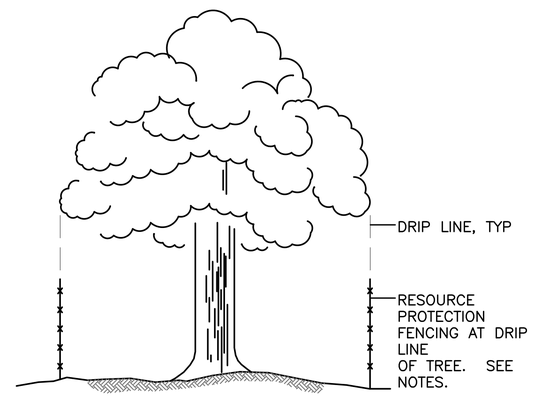

NOTES:

1. PROVIDE RESOURCE PROTECTION FENCING IN THE INDICATED AREAS FOR THE DURATION OF THE CONTRACT. FENCE SHALL BE FOUR FOOT HIGH ORANGE POLYETHYLENE SAFETY FENCE WITH ULTRAVIOLET STABILIZER SUPPORTED ON STEEL T–POSTS AT TEN FOOT MAXIMUM SPACING. FENCE SHALL BE TENAX CORPORATION GUARDIAN SAFETY FENCE OR EQUAL.
2. PROVIDE RESOURCE PROTECTION FENCE AROUND THE DRIP LINE OF TREES. WHERE DRIP LINE EXTENDS OVER PAVED AREAS, RUN THE FENCE ALONG THE EDGE OF THE PAVEMENT.

2 D1.13 TREE PROTECTION FENCING DETAIL
NTS

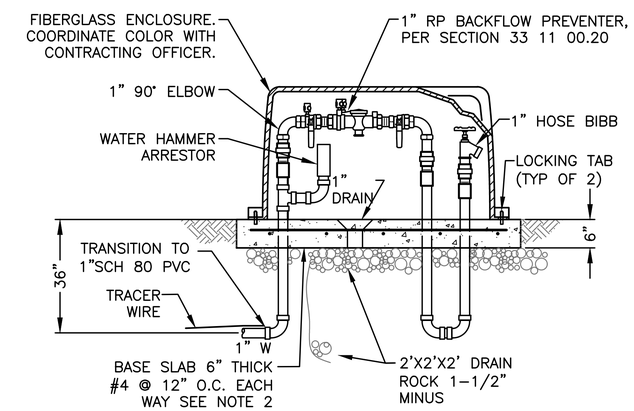

NOTE:

1. PROVIDE ADDITIONAL ENCLOSURE ON THE SAME CONCRETE SLAB AND 50' LENGTH OF 1"ø HOSE, STORED INSIDE OF ADDITIONAL ENCLOSURE.
2. SLAB FOOTPRINT. DIMENSION 7'–4" X 2'–8"
3. PIPE COMPONENTS TO BE GALVANIZED STEEL.
4. BACKFLOW PREVENTER ASSEMBLY ENCLOSURE TO BE PROVIDED WITH 110 VOLT PLUG RECEPTACLE AND INTERNAL PIPING TO BE WRAPPED WITH HEAT TAPE.

3 D1.13 BACKFLOW PREVENTER & HOSE BIB ASSEMBLY
NTS

REGISTERED PROFESSIONAL ENGINEER
DAVID BARTON BROOKE
NO. 10417
CIVIL
STATE OF CALIFORNIA
100% DRAFT

DESIGNED: D. BROOKE	SUB SHEET NO.	TITLE OF SHEET	DRAWING NO.
CADD M. GARCIA	D1.13	MISC DETAILS AMWWTP	102 / 177,507
TECH. REVIEW: J. BLOM		REHABILITATE ASH AND BUCKEYE WASTEWATER TREATMENT PLANTS SEQUOIA & KINGS CANYON NATIONAL PARKS	PMIS/PKG NO. 317446
DATE: 04/07/2022			SHEET 51 OF 135

26/04/2022 13:26 MARIO GARCIA G:\CLIENTS\NPS\SEKI\317446\DRAWINGS\ASH MOUNTAIN DWGS\8 DETAIL SHEETS AMWWTP\51 – DETAILS MONITOR WELL.DWG

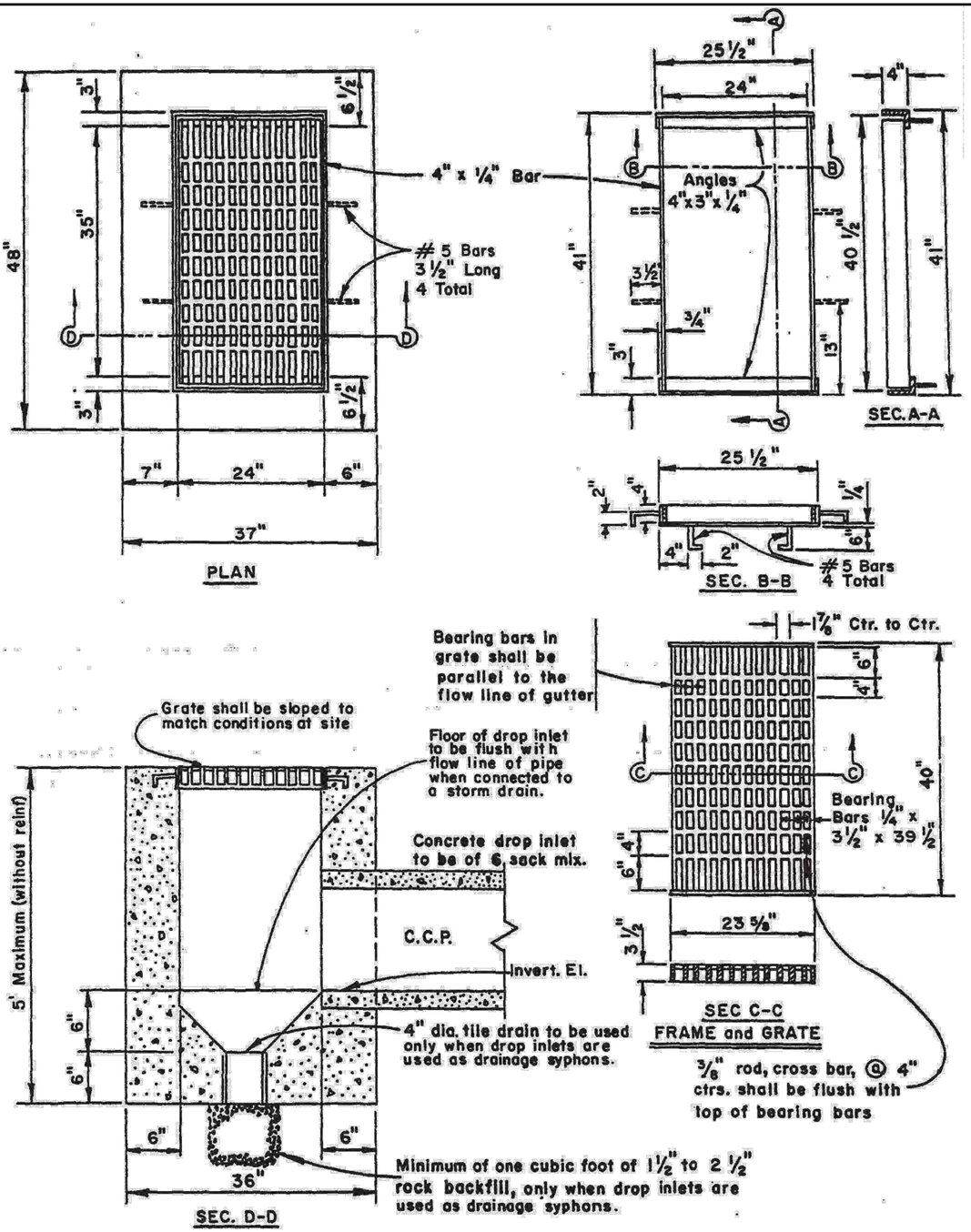

2 D1.14 TYPA "A" DROP INLET PLATE NO. A-27 C
NTS

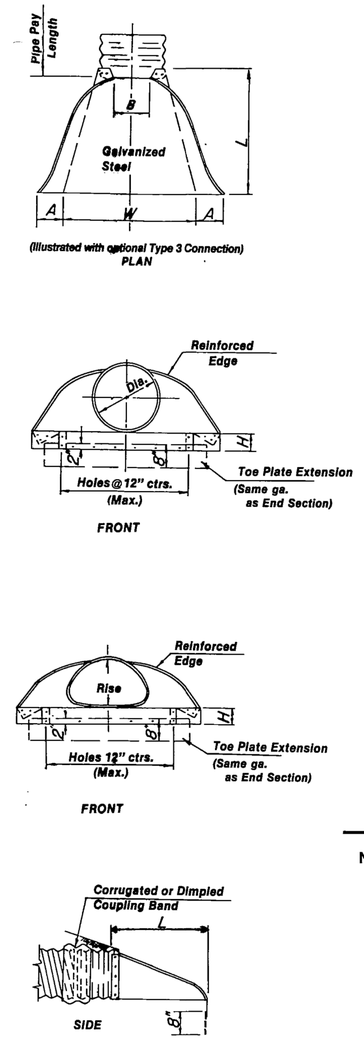

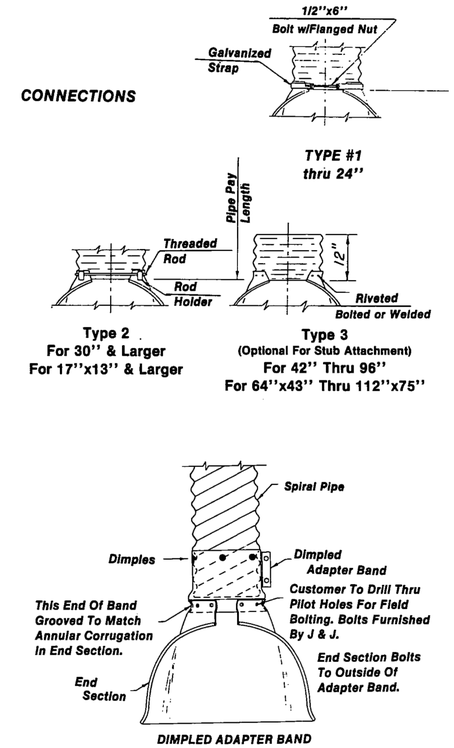

NOTE: 12" thru 24" Round and Arched End Sections are palletized.
Normal quantities per pallet are:

12" 50
15" or 17"x13" 50
18" or 21"x15" 50
21" or 24"x18" 50
24" or 28"x20" 50

End Sections grooved for 1/2" corrugations.

1 D1.14 CMP METAL END SECTION
NTS

NOTES:

1. *DIMENSIONS IN INCHES PLUS OR MINUS STANDARD SHOP TOLERANCE.
2. TOE PLATE EXTENSIONS WHERE SPECIFIED, TO BE PUNCHED TO MATCH HOLES IN APRON LIP. 3/8" BOLTS TO BE FURNISHED. THE LENGTH OF TOE PLATE TO BE AS FOLLOWS: W + 10" FOR 12" TO 30" DIAMETER INCLUSIVE.
3. MULTIPLE PANEL END SECTIONS SHALL HAVE LAP SEAMS WHICH ARE TO BE TIGHTLY JOINTED BY RIVETS OR BOLTS. CORNER PLATE, AND TOE PLATE TO BE SAME GAUGE AS END SECTION.

KEYNOTES

1 STORM DRAIN INFRASTRUCTURE CONSTRUCTION SHOWN ON SHEET C1.4.

END SECTIONS FOR ROUND PIPE

DIA.	GAUGE	WEIGHT	* A	* B	* H	* L	* W	SLOPE	OVERALL WIDTH
18"	16	42	8	10	6	31	36	2 1/2	52"
21"	16	49	9	12	6	36	42	2 1/2	60"
24"	16	65	10	13	6	41	48	2 1/2	68"

END SECTIONS FOR ARCHED PIPE

SPAN & RISE	ROUND EQUIVALENT	GAUGE	WEIGHT	* A	* B	* H	* L	* W	SLOPE	OVERALL WIDTH
21 X 15	18"	16	32	7	10	6	23	36	2 1/2	50"
24 X 18	21"	16	42	8	12	6	28	42	2 1/2	58"
28 X 20	24"	16	52	9	14	6	32	48	2 1/2	66"

REGISTERED PROFESSIONAL ENGINEER
DAVID BARTON BROOKE
NO. 70417
CIVIL
STATE OF CALIFORNIA
100% DRAFT

DESIGNED: D. BROOKE CADD: M. GARCIA TECH. REVIEW: J. BLOM DATE: 04/07/2022	SUB SHEET NO. D1.14	TITLE OF SHEET SITE DRAINAGE DETAILS AMWWTP REHABILITATE ASH AND BUCKEYE WASTEWATER TREATMENT PLANTS SEQUOIA & KINGS CANYON NATIONAL PARKS	DRAWING NO. 102 / 177,507 PMIS/PKG NO. 317446 SHEET 52 OF 135

25/04/2022 14:05 MARIO GARCIA G:\CLIENTS\NPS\SEKI\317446\DRAWINGS\ASH MOUNTAIN DWGS\8_DETAIL SHEETS AMWWTP\52 - DETAILS SITE DRAINAGE.DWG

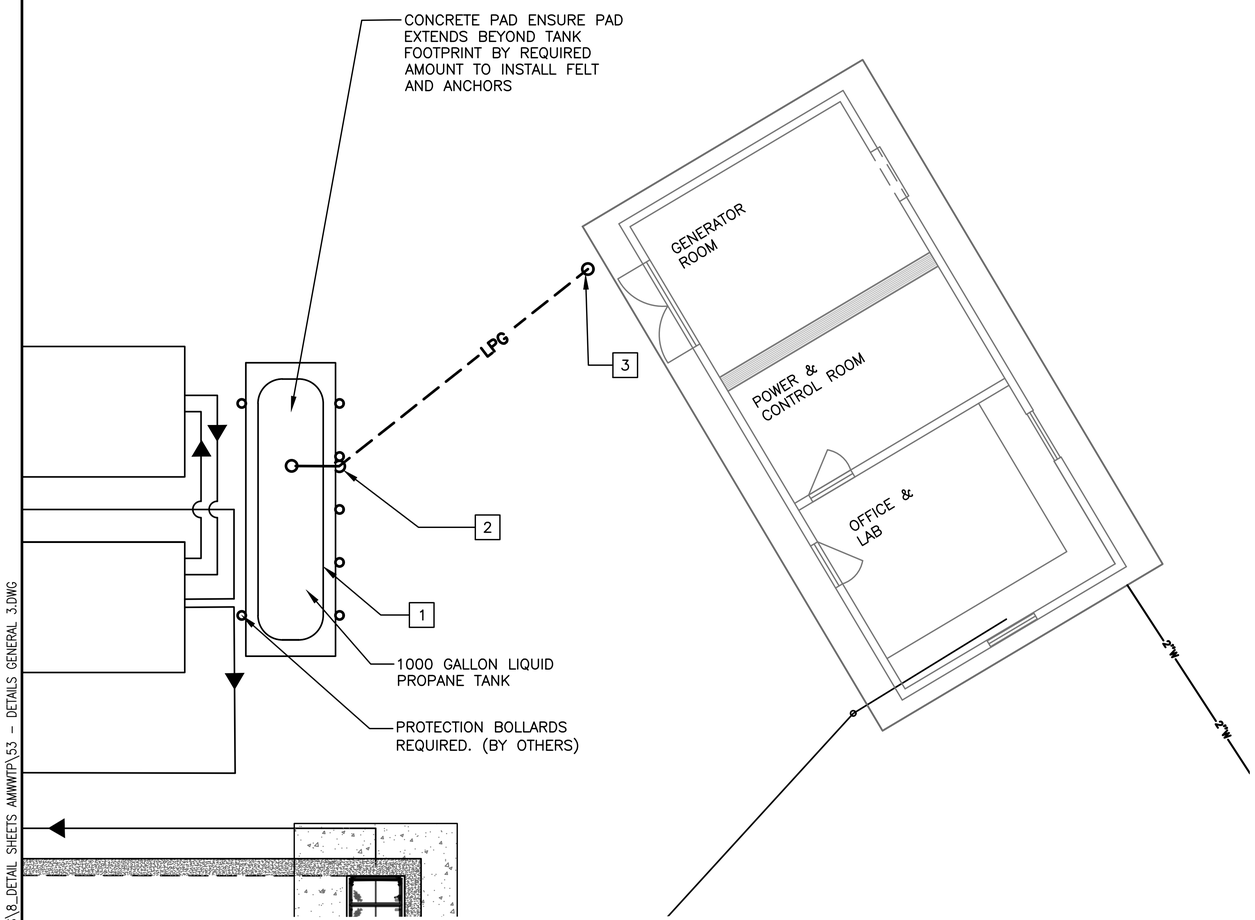

1 FUEL SYSTEM NEW EQUIPMENT

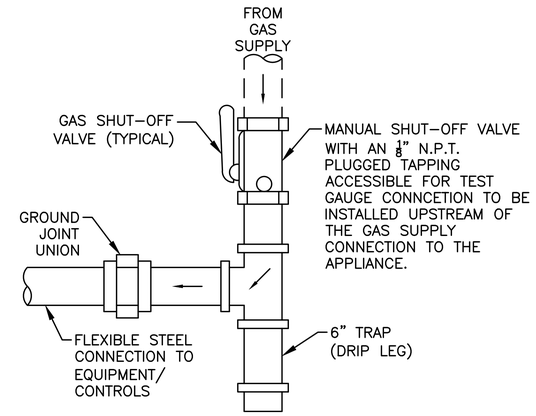

2 GAS CONNECTION DETAIL

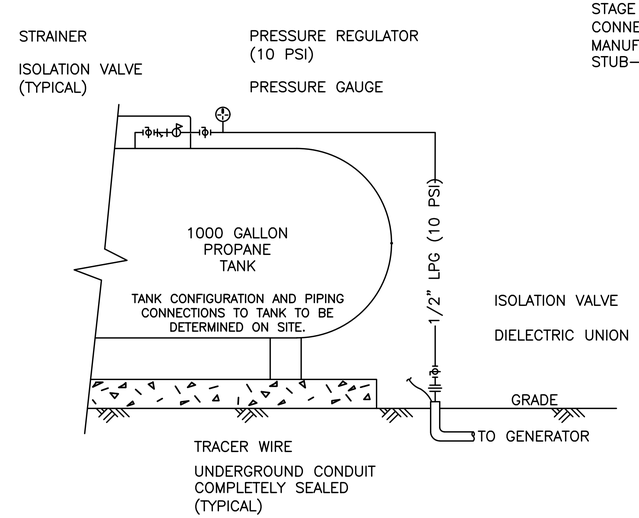

3 LPG PIPING DETAIL

GENERAL NOTES:

1. FURNISH AND INSTALL ALL MATERIALS AND EQUIPMENT AND PROVIDE ALL LABOR REQUIRED AND NECESSARY TO COMPLETE THE WORK SHOWN ON THE DRAWINGS AND/OR SPECIFIED IN ALL PERTINENT SECTIONS OF DIVISION 23 AND ALL OTHER WORK AND MISCELLANEOUS ITEMS, NOT SPECIFICALLY MENTIONED, BUT REASONABLY INFERRED FOR A COMPLETE INSTALLATION, INCLUDING ALL ACCESSORIES REQUIRED FOR TESTING THE SYSTEM. IT IS THE INTENT OF THE DRAWINGS AND SPECIFICATIONS THAT ALL SYSTEMS BE COMPLETE AND READY FOR OPERATION.
2. ALL LIQUID PETROLEUM GAS (LPG) PIPING MATERIALS, PIPE ACCESSORIES AND INSTALLATION REQUIREMENTS SHALL COMPLY WITH NFPA 58, PROJECT SPECIFICATIONS AND THE REQUIREMENTS OF THE AHJ.

KEY NOTES:

1. CONNECT TO PROPANE TANK ISOLATION VALVE WITH STRAINER, FIRST STAGE REGULATOR (10 PSI) AND PRESSURE GAGE.
2. ROUTE 1/2" LPG (10 PSI) PIPING TO BELOW GRADE WITH GAS ISOLATION VALVE AND DIELECTRIC FITTING. ROUTE IN PVC SLEEVE BELOW GRADE PER NFPA 58 WITH TRACER WIRE. SEAL ENDS OF CONDUIT WEATHER-TIGHT. CONTRACTOR TO VERIFY EXACT STUB-UP LOCATION.
3. STUB-UP 1/2" LPG (10 PSI) PIPING ABOVE GRADE. INSTALL DIELECTRIC FITTING, GAS ISOLATION VALVE, STRAINER AND SECOND STAGE REGULATOR (10 PSI TO 11" W.C.) AND PRESSURE GAGE. CONNECT 3/4" LPG (11" W.C.) TO GENERATOR PER MANUFACTURER'S REQUIREMENTS. CONTRACTOR TO VERIFY EXACT STUB-UP LOCATION.

REGISTERED PROFESSIONAL ENGINEER
DAVID BARTON BROOKE
NO. 72417
CIVIL
STATE OF CALIFORNIA
100% DRAFT

5 0 5 10
SCALE OF FEET

DESIGNED: D. BROOKE CADD: M. GARCIA TECH. REVIEW: J. BLOM DATE: 04/07/2022	SUB SHEET NO. D1.15	TITLE OF SHEET PROPANE PIPING DETAILS AMWWTP REHABILITATE ASH AND BUCKEYE WASTEWATER TREATMENT PLANTS SEQUOIA & KINGS CANYON NATIONAL PARKS	DRAWING NO. 102 / 177,507 PMIS/PKG NO. 317446 SHEET 53 OF 135

21/04/2022 14:34 MARIO GARCIA G:\CLIENTS\NPS\SEKI\317446\DRAWINGS\ASH MOUNTAIN DWGS\8_DETAIL SHEETS AMWWTP\53 - DETAILS GENERAL 3.DWG

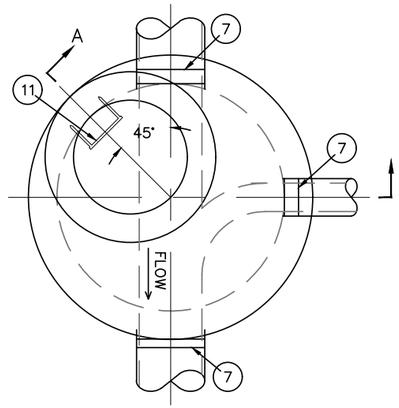

PLAN

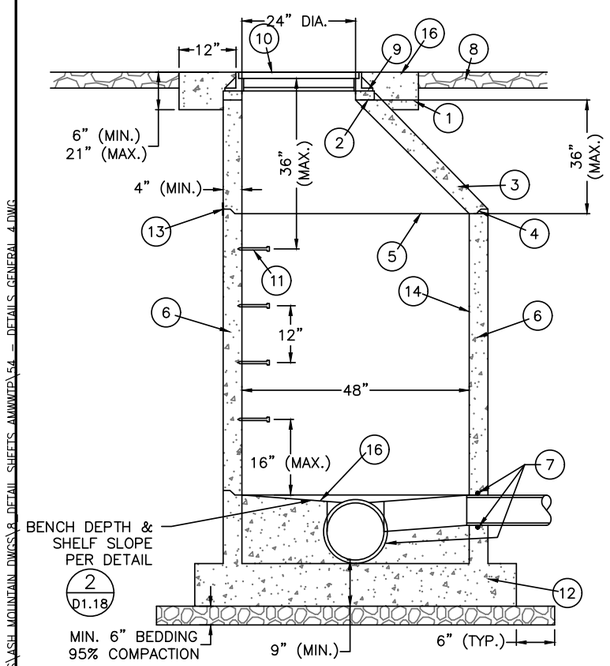

SECTION A–A

1 D1.16 DEEP MANHOLE – GREATER THAN 7' DEEP
NTS

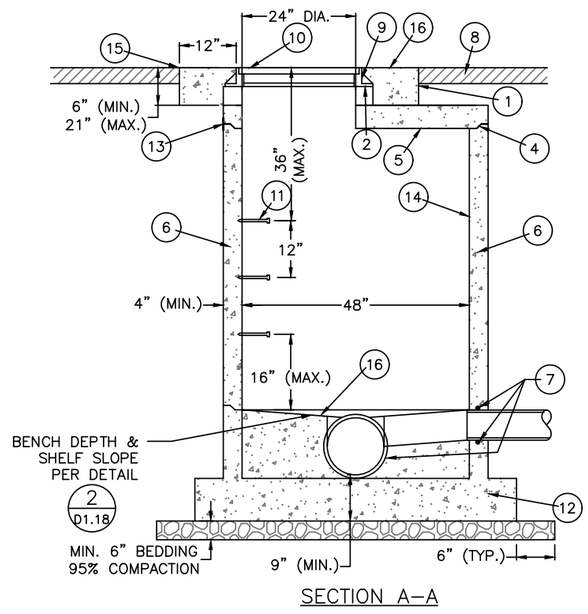

SECTION A–A

2 D1.16 MEDIUM DEPTH MANHOLE – 4.1' TO 7'
NTS

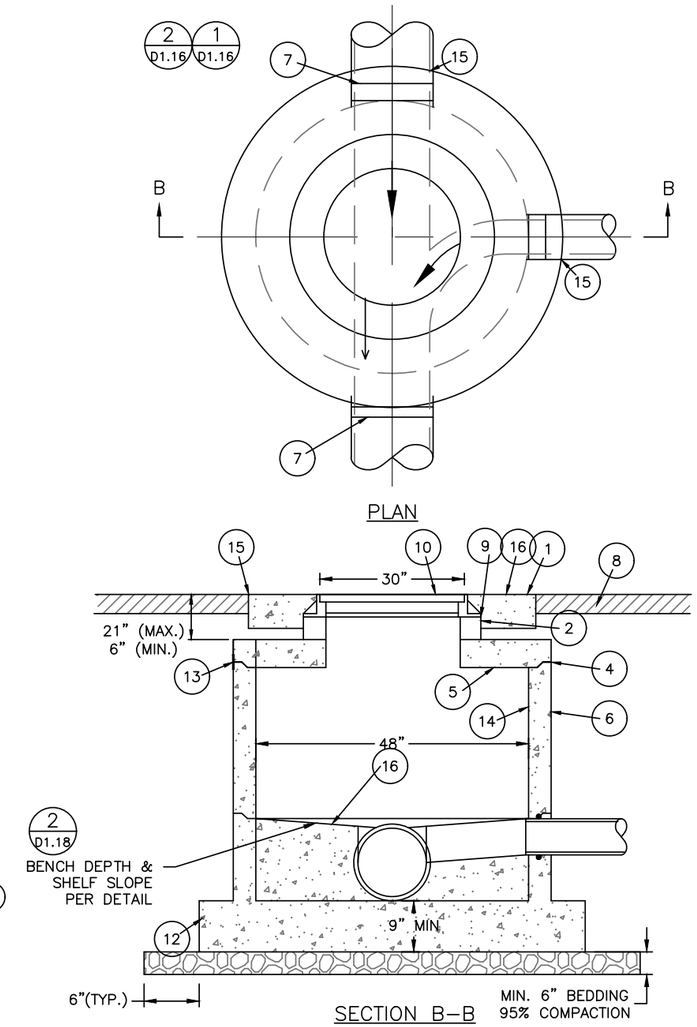

PLAN

SECTION B–B

3 D1.16 SHALLOW MANHOLE – 2.5' TO 4' DEEP
NTS

LEGEND:

1. CONCRETE COLLAR IN PAVED STREET SECTIONS PER DETAIL
2. GRADE RINGS GROUTED WATERTIGHT IN PLACE, NOT TO EXCEED 21" FROM FINISHED SURFACE TO TOP OF CONE
3. PRECAST MONOLITHIC ECCENTRIC CONE SECTION. (REBAR NOT SHOWN)
4. RAMNEK RN 103 OR APPROVED EQUAL GASKETS ALL JOINTS
5. PROPERLY ALIGN ALL INTERIOR JOINTS
6. PRECAST CONCRETE MANHOLE–BARREL SECTION (REBAR NOT SHOWN)
7. PRECAST GASKETED HUB RING OR RUBBER GASKETED COLLAR–FLEXIBLE AND WATER TIGHT.
8. REPLACEMENT SURFACING TO MATCH FLUSH WITH EXISTING SURFACING (GRAVEL SHOWN)
9. FRAME TO BE GROUTED TO GRADE RINGS
10. FRAME AND BOLT DOWN COVER WITH O–RING GASKET ON ALL MANHOLES.
11. MANHOLE STEPS FOR MANHOLES DEEPER THAN 4FT.
12. PRECAST CONCRETE MANHOLE BASE
13. SEAL ALL EXTERNAL JOINTS WITH 12" EZ–WRAP OR APPROVED EQUAL
14. PRECAST MANHOLE CONE, BARREL RINGS, AND BASE INTERIOR TO BE COATED PER SPECIFICATIONS.
15. CORE–DRILL THROUGH PRECAST SECTION
16. QUICKCRETE FAST SET NON SHRINK GROUT (NO. 1585–09) OR APPROVED EQUAL

KEY NOTES:

A. PLACE VERTICAL WALL STEPS AND ACCESS ON UPSTREAM SIDE OF MANHOLE, ROTATED 45 DEGREES. MANHOLES DEEPER THAN 4FT ONLY.

B. MANHOLE FRAME AND COVER:
   A. REFER TO MANHOLE COLLAR DETAIL
   B. FRAME AND COVER SHALL BE FLUSH WITH SLOPE OF PAVEMENT
   C. TRAFFIC RATED, H–20 WHEEL LOADING

C. WHERE PVC PIPE IS UTILIZED, INSTALL A RUBBER RING OR GASKET COLLAR WHERE THE PIPE IS IN CONTACT WITH MANHOLE BASE AND/OR MANHOLE CHANNEL, IN ORDER TO INSURE A WATERTIGHT SEAL.

D. PROVIDE MANHOLE CONCRETE REINFORCING TO ACCOMMODATE TRAFFIC LOADINGS.

E. BEDDING SHALL BE CLASS II AGGREGATE BASE CONFORMING TO CALTRANS SPECIFICATIONS.

F. IN PAVED AREAS SET MANHOLE RIM ¼" BELOW PAVEMENT SURFACE.

G. IN UNPAVED AREAS USE COLLAR DETAIL:

H. WHERE NO SNOWPLOW APRON IS REQUIRED, USE COLLAR DETAIL:

I. RING AND COVER SHALL BE SET FLUSH WITH GRAVEL GRADE IN VEHICULAR TRAVEL WAYS.

J. PRECAST MANHOLE SECTIONS SHALL MEET REQUIREMENTS OF ASTM C478 AND AASHTO M199.

REGISTERED PROFESSIONAL ENGINEER
DAVID BARTON BROOKE
NO. 70417
CIVIL
STATE OF CALIFORNIA
100% DRAFT

DESIGNED: D. BROOKE	SUB SHEET NO.	TITLE OF SHEET	DRAWING NO.
CADD M. GARCIA	D1.16	MANHOLE DETAILS	102 / 177,507
TECH. REVIEW: J. BLOM		REHABILITATE ASH AND BUCKEYE WASTEWATER TREATMENT PLANTS SEQUOIA & KINGS CANYON NATIONAL PARKS	PMIS/PKG NO. 317446
DATE: 04/07/2022			SHEET 54 OF 135

06/04/2022 14:00 MARIO GARCIA C:\CLIENTS\NPS\SEKI\317446\DRAWINGS\ASH MOUNTAIN DWGS\8 DETAIL SHEETS AMWWTP\54 - DETAILS GENERAL 4.DWG

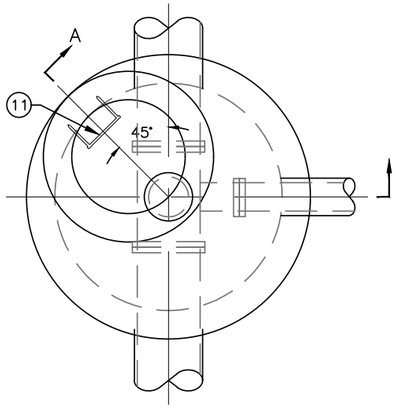

PLAN

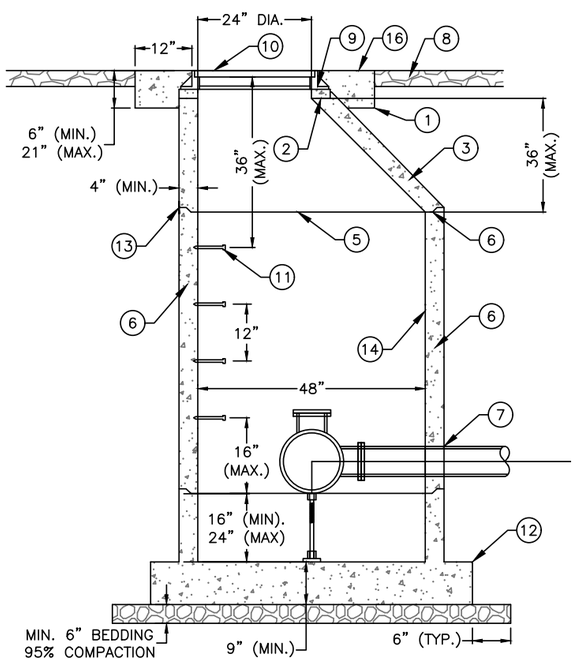

SECTION A–A

1 D1.17 DEEP MANHOLE – GREATER THAN 7' DEEP
NTS

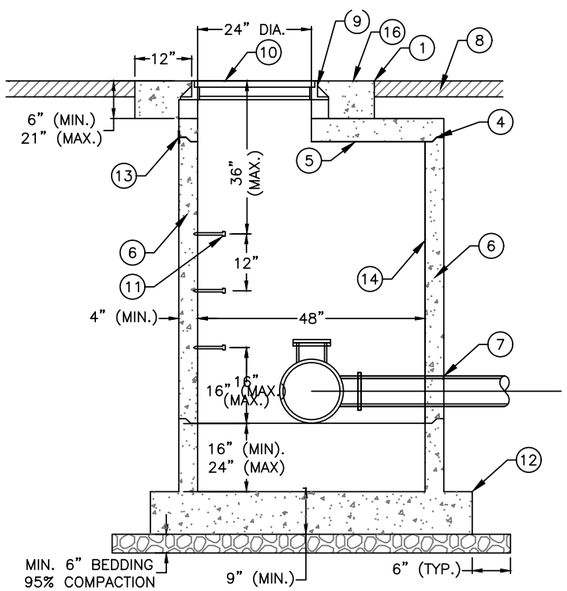

SECTION A–A

2 D1.17 MEDIUM DEPTH MANHOLE – 4.1' TO 7'
NTS

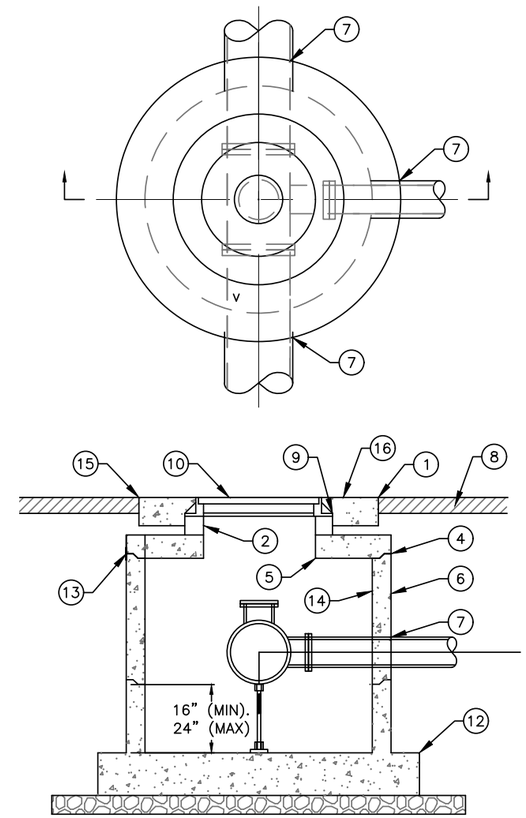

3 D1.17 SHALLOW MANHOLE – 2.5' TO 4' DEEP
NTS

LEGEND:

1. CONCRETE COLLAR IN PAVED STREET SECTIONS PER DETAIL (1 / D1.18)
2. GRADE RINGS GROUTED WATERTIGHT IN PLACE, NOT TO EXCEED 21" FROM FINISHED SURFACE TO TOP OF CONE
3. PRECAST MONOLITHIC ECCENTRIC CONE SECTION. (REBAR NOT SHOWN)
4. RAMNEK RN 103 OR APPROVED EQUAL GASKETS ALL JOINTS
5. PROPERLY ALIGN ALL INTERIOR JOINTS
6. PRECAST CONCRETE MANHOLE–BARREL SECTION (REBAR NOT SHOWN)
7. WATER TIGHT NON SHRINK GROUT.
8. REPLACEMENT SURFACING TO MATCH FLUSH WITH EXISTING SURFACING (GRAVEL SHOWN)
9. FRAME TO BE GROUTED TO GRADE RINGS
10. FRAME AND BOLT DOWN COVER WITH O–RING GASKET ON ALL MANHOLES.
11. MANHOLE STEPS FOR MANHOLES DEEPER THAN 4FT.
12. PRECAST CONCRETE MANHOLE BASE
13. SEAL ALL EXTERNAL JOINTS WITH 12" EZ–WRAP OR APPROVED EQUAL
14. PRECAST MANHOLE CONE, BARREL RINGS, AND BASE INTERIOR TO BE COATED PER SPECIFICATIONS.
15. CORE–DRILL THROUGH PRECAST SECTION
16. QUICKCRETE FAST SET NON SHRINK GROUT (NO. 1585–09) OR APPROVED EQUAL
17. PIPE SUPPORT (2 / D1.11)

KEY NOTES:

(A) PLACE VERTICAL WALL STEPS AND ACCESS ON UPSTREAM SIDE OF MANHOLE, ROTATED 45 DEGREES. MANHOLES DEEPER THAN 4FT ONLY.

(B) MANHOLE FRAME AND COVER:
A. REFER TO MANHOLE COLLAR DETAIL
B. FRAME AND COVER SHALL BE FLUSH WITH SLOPE OF PAVEMENT
C. TRAFFIC RATED, H–20 WHEEL LOADING

(C) GROUT PENETRATIONS, IN ORDER TO INSURE A WATERTIGHT SEAL.

(D) PROVIDE MANHOLE CONCRETE REINFORCING TO ACCOMMODATE TRAFFIC LOADINGS.

(E) BEDDING SHALL BE CLASS II AGGREGATE BASE CONFORMING TO CALTRANS SPECIFICATIONS.

(F) IN PAVED AREAS SET MANHOLE RIM ¼" BELOW PAVEMENT SURFACE.

(G) IN UNPAVED AREAS USE COLLAR DETAIL:

(H) RING AND COVER SHALL BE SET FLUSH WITH GRAVEL GRADE IN VEHICULAR TRAVEL WAYS.

(J) PRECAST MANHOLE SECTIONS SHALL MEET REQUIREMENTS OF ASTM C478 AND AASHTO M199.

REGISTERED PROFESSIONAL ENGINEER
DAVID BARTON BROOKE
NO. 72417
100% DRAFT
CIVIL
STATE OF CALIFORNIA

DESIGNED: D. BROOKE	SUB SHEET NO.	TITLE OF SHEET	DRAWING NO.
CADD M. GARCIA	D1.17	MANHOLE DETAILS	102 / 177,507
TECH. REVIEW: J. BLOM		REHABILITATE ASH AND BUCKEYE WASTEWATER TREATMENT PLANTS SEQUOIA & KINGS CANYON NATIONAL PARKS	PMIS/PKG NO. 317446
DATE: 04/07/2022			SHEET 55 OF 135

26/04/2022 14:00 MARIO GARCIA G:\CLIENTS\NPS\SEQ\317446\DRAWINGS\ASH MOUNTAIN DWGS\8 DETAIL SHEETS AMWTP\55 – DETAILS GENERAL 4B.DWG

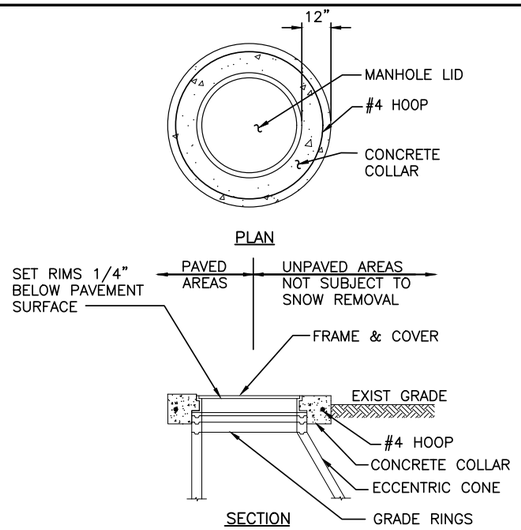

1 D1.18 MANHOLE CONCRETE COLLAR DETAIL
NTS

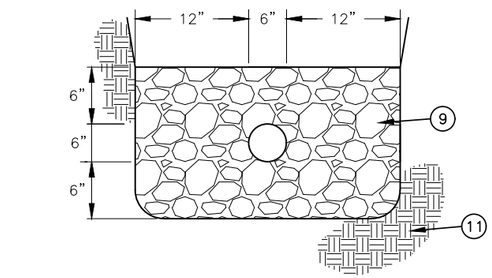

SECTION B–B

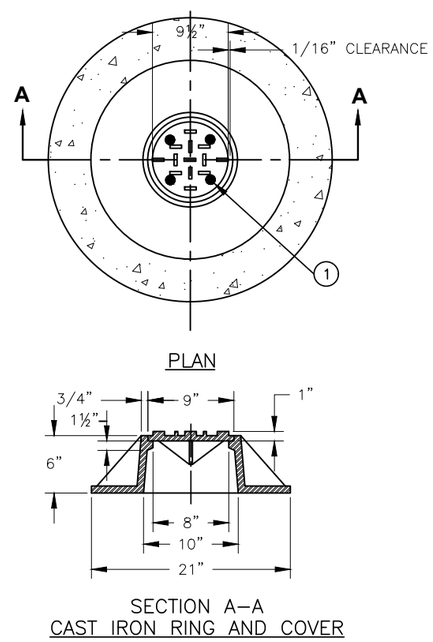

SECTION A–A
CAST IRON RING AND COVER

3 D1.18 TYPICAL CLEANOUT DETAIL
NTS

KEY NOTES:

1. 4 – 1" DIA. HOLES ON 3 1/2" RADIUS.
2. MECHANICAL PLUG.
3. 12" DIA. x 12" PVC, DIP OR CP.
4. FIBER JOINT MATERIAL.
5. PIPE MATERIAL TO MATCH SERVICE LATERAL.
6. 45° LONG SWEEP BENDS.
7. "Y" FITTINGS.
8. EXISTING OR NEW PIPE. BEDDING MATERIAL.
9. MISSION COUPLER OR APPROVED SUBSTITUTION.
10. (PVC); ELECTROFUSED (HDPE)
11. UNDISTURBED MATERIAL.

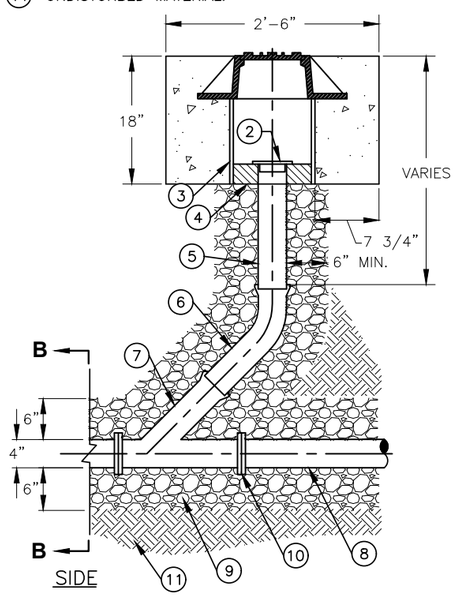

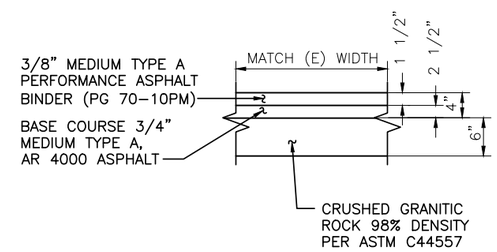

NOTES:

1. SUBMIT HVEEM MIX DESIGN PRIOR TO CONSTRUCTION.
2. BASE AGGREGATES ARE REQUIRED TO BE FRACTURED SIERRA GRANITE, WHICH MEETS THE CALTRANS CLASS II BASE AGGREGATE SPEC.

4 D1.18 REPLACEMENT ASPHALT SECTION
NTS

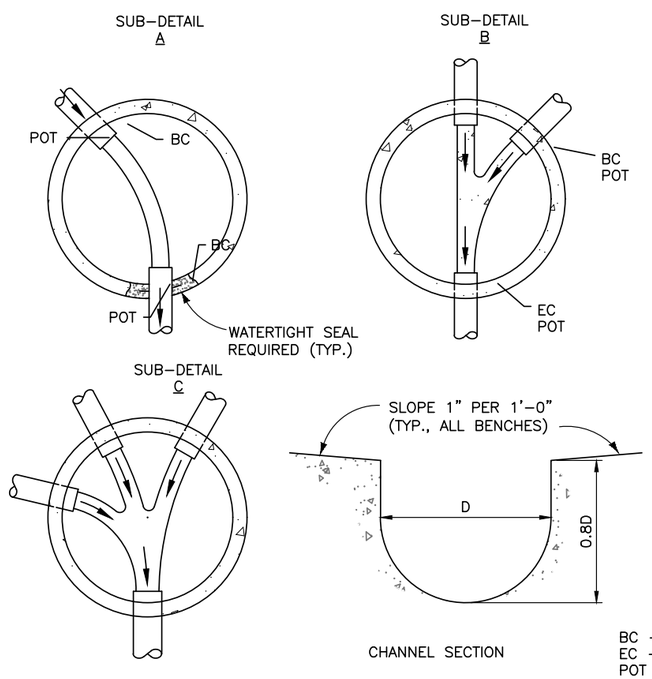

BC – BEGIN CURVE
EC – END CURVE
POT – POINT OF TANGENT

2 D1.18 TYPICAL FLOW CHANNELS THROUGH MANHOLE
NTS

REGISTERED PROFESSIONAL ENGINEER
DAVID BARTON BROOKE
NO. 72417
100% DRAFT
CIVIL
STATE OF CALIFORNIA

DESIGNED: D. BROOKE CADD M. GARCIA TECH. REVIEW: J. BLOM DATE: 04/07/2022	SUB SHEET NO. D1.18	TITLE OF SHEET MANHOLE DETAILS REHABILITATE ASH AND BUCKEYE WASTEWATER TREATMENT PLANTS SEQUOIA & KINGS CANYON NATIONAL PARKS	DRAWING NO. 102 / 177,507 PMIS/PKG NO. 317446 SHEET 56 OF 135

26/04/2022 14:03 MARIO GARCIA G:\CLIENTS\NPS\SEQ\317446\DRAWINGS\ASH MOUNTAIN DWGS\8 DETAIL SHEETS AMWTP\56 – DETAILS GENERAL 5.DWG

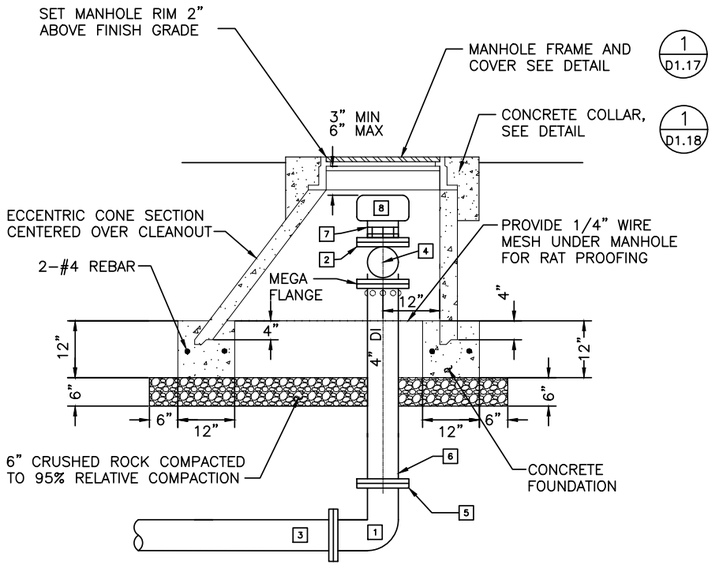

KEY NOTES:

1. 4x4 DI FLANGED ELBOW
2. D.I. FLANGE WITH 4" SCREWED PLUG, AND STAINLESS STEEL BOLTS.
3. 4" CLASS 350 DUCTILE IRON PIPE EPOXY COATED INTERIOR & EXTERIOR
4. 4" BALL VALVE
5. DI FLANGE (TYP)
6. 4" DI PIPE
7. MALE ADAPTOR
8. 4" CAM LOCK, QUICK CONNECT W/ DIST. CAP.

1 D1.19 SLUDGE REMOVAL CAM LOCK DETAIL
NTS

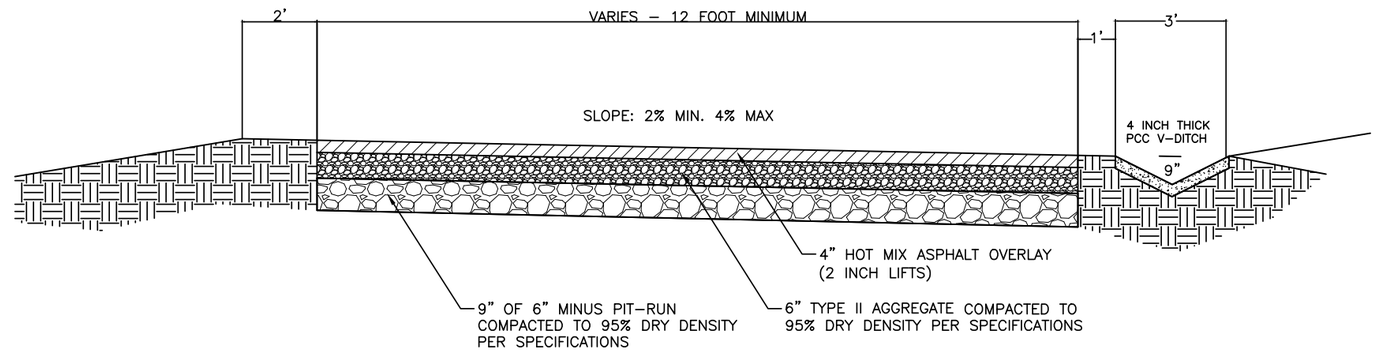

3 D1.19 ACCESS ROAD STRUCTURAL PAVEMENT SECTION
NTS

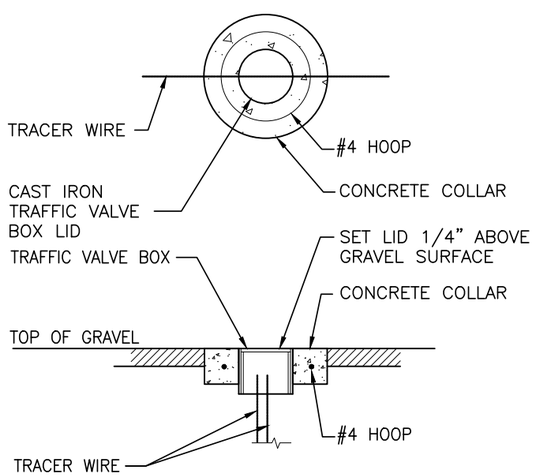

2 D1.19 TRACER WIRE BOX DETAIL
NTS

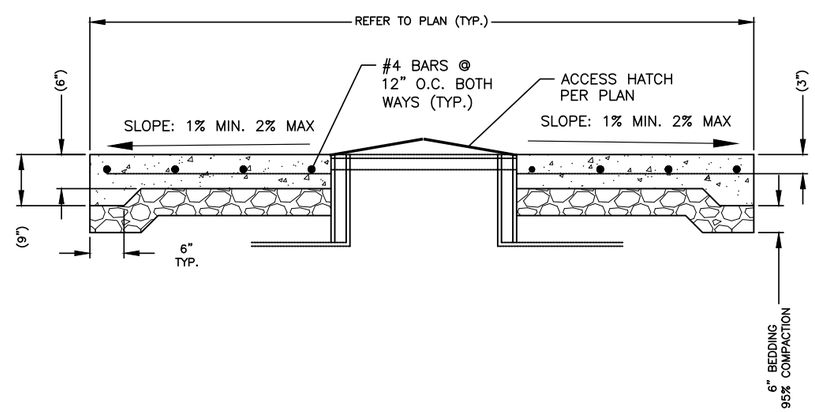

4 D1.19 ACCESS HATCH – CONCRETE PAD STRUCTURAL PAVEMENT SECTION
NTS

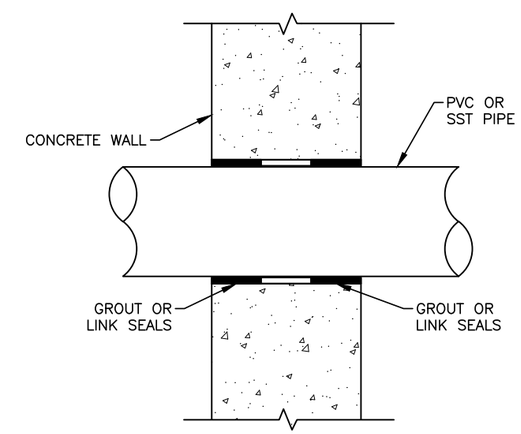

5 **WALL PENETRATION DETAIL**
SCALE: NTS

REGISTERED PROFESSIONAL ENGINEER
DAVID BARTON BROOKE
NO. 70417
CIVIL
STATE OF CALIFORNIA
100% DRAFT

DESIGNED: D. BROOKE CADD M. GARCIA TECH. REVIEW: J. BLOM DATE: 04/07/2022	SUB SHEET NO. D1.19	TITLE OF SHEET GENERAL DETAILS REHABILITATE ASH AND BUCKEYE WASTEWATER TREATMENT PLANTS SEQUOIA & KINGS CANYON NATIONAL PARKS	DRAWING NO. 102 / 177,507 PMIS/PKG NO. 317446 SHEET 57 OF 135

06/04/2022 13:39 MARIO GARCIA G:\CLIENTS\NPS\SEK\317446\DRAWINGS\ASH MOUNTAIN DWGS\R_DETAIL SHEETS_AMWTP\57 - DETAILS_GENERAL_7.DWG
05/9/17 09:07 SETH R20 G:\CLIENTS\NPS\YOSE\158675B\DRAWINGS\CIVL\D5_DETL_MNHL.DWG XREFS: G:\CLIENTS\NPS\YOSE\158675B\DRAWINGS\BASES\XC_ENGR_STMP.DWG;

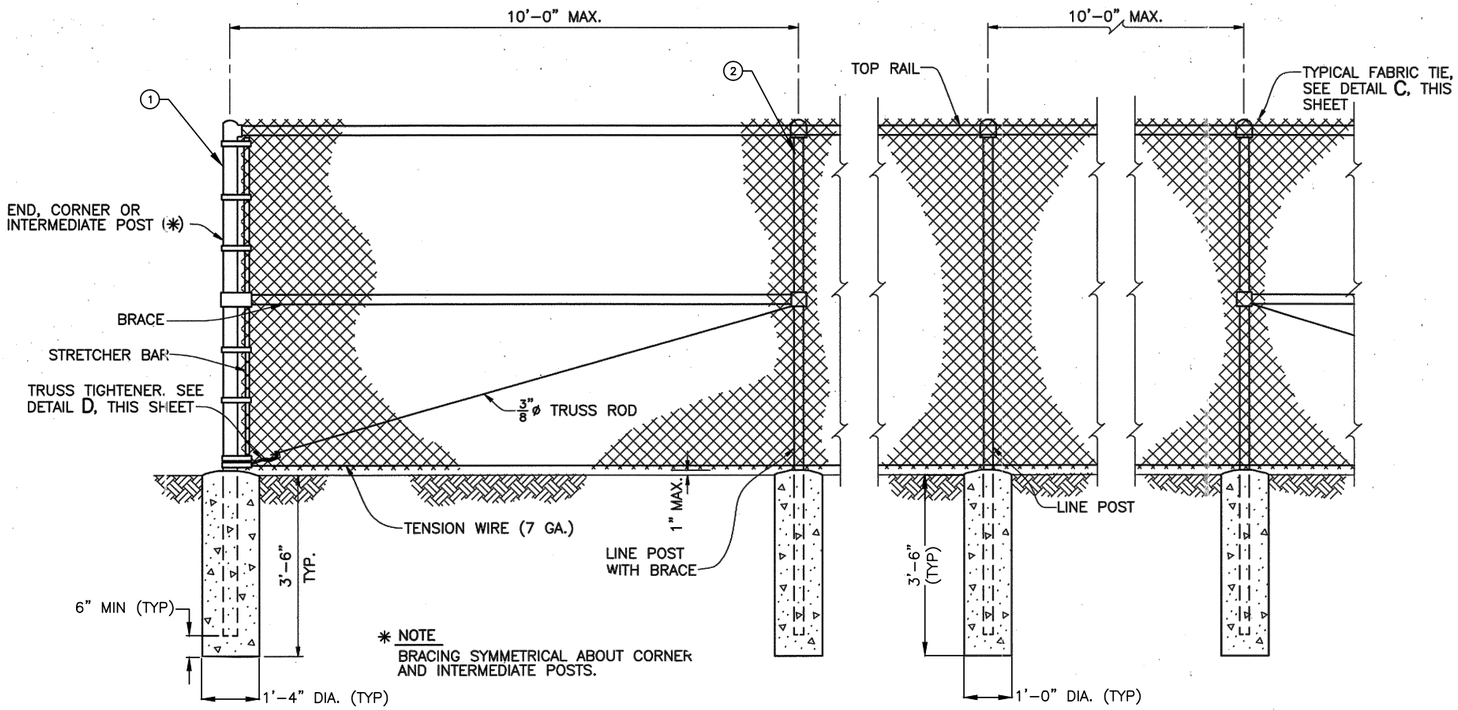

A 6' CHAIN LINK FENCE
SCALE: NTS

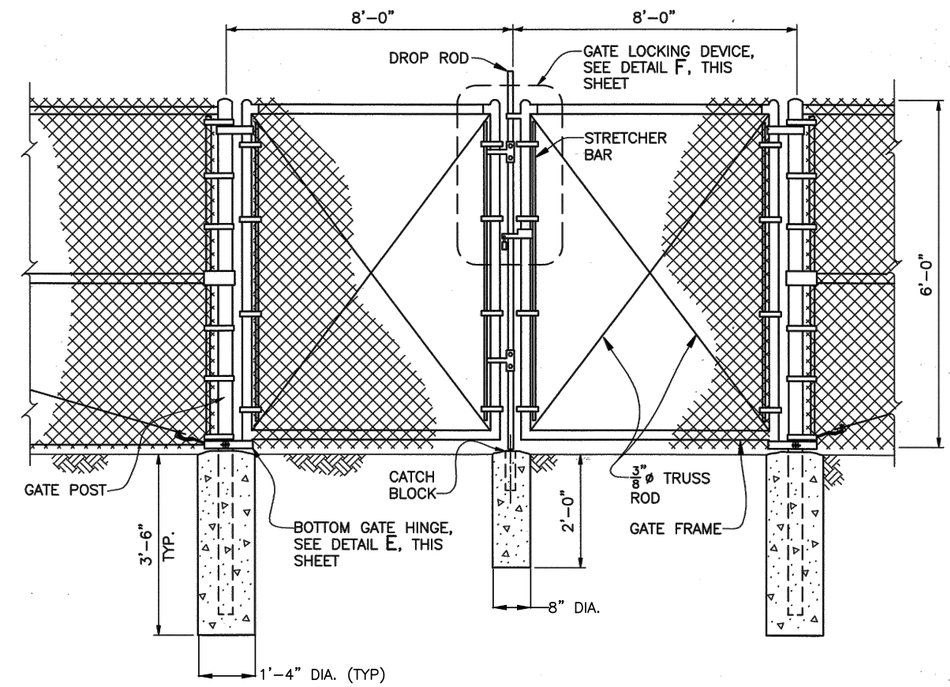

B 16' CHAIN LINK GATE
SCALE: NTS

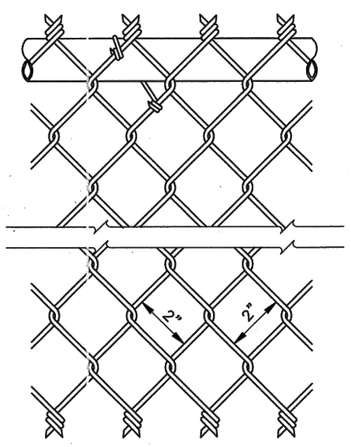

C TYPICAL FABRIC TIE
SCALE: NTS

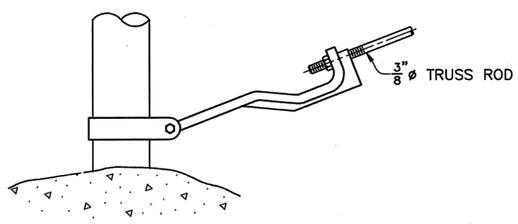

D TRUSS TIGHTENER DETAIL
SCALE: NTS

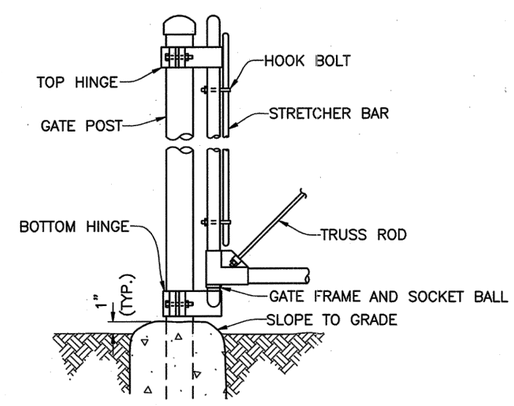

E BOTTOM GATE HINGE DETAIL
SCALE: NTS

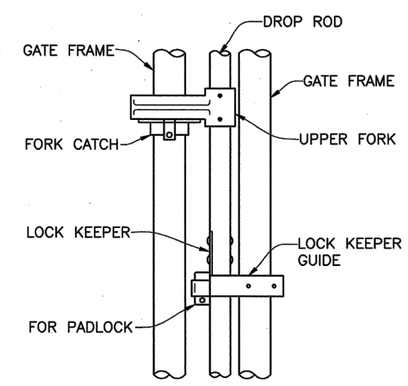

F GATE LOCKING DEVICE
SCALE: NTS

KEY NOTES

1. O.D. & WALL THICKNESS OF END, CORNER OR INTERMEDIATE POST: 2-3/8" DIA. 0.11" PER F.B.C. 2020 SECTION 2224.
2. O.D. & WALL THICKNESS OF LINE POST: 2-3/8" DIA. 0.095" PER F.B.C. 2020 SECTION 2224.

REGISTERED PROFESSIONAL ENGINEER
DAVID BARTON BROOKE
NO. 70417
100% DRAFT
CIVIL
STATE OF CALIFORNIA

DESIGNED: D. BROOKE DRAWN: M. GARCIA TECH. REVIEW: J. BLOM DATE: 04/07/2022	SUB SHEET NO. D1.20	TITLE OF SHEET CHAIN LINKE FENCE REHABILITATE ASH AND BUCKEYE WASTEWATER TREATMENT PLANTS SEQUOIA & KINGS CANYON NATIONAL PARKS	DRAWING NO. 102 177,507 PMIS/PKG NO. 317446 SHEET 58 OF 135

21/04/2022 15:22 MARIO GARCIA G:\CLIENTS\NPS\SEKI\317446\DRAWINGS\ASH MOUNTAIN DWGS\R DETAIL SHEETS AMWWTP\58 - DETAILS CHAIN LINK FENCE NEW SHEET.DWG

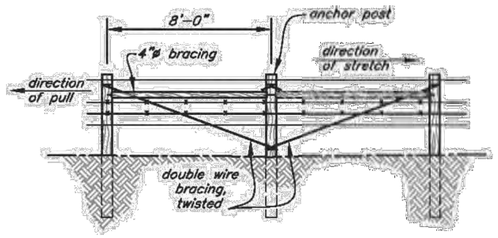

LINE BRACE

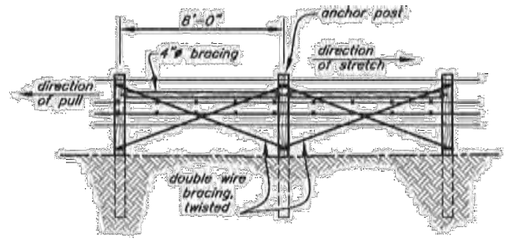

LINE BRACE

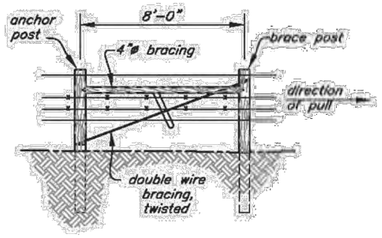

1-SPAN END

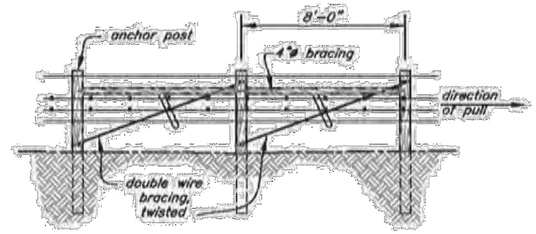

2-SPAN END

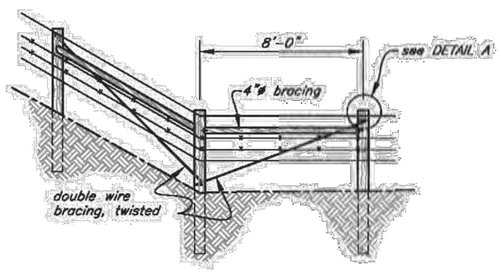

CORNER BRACE

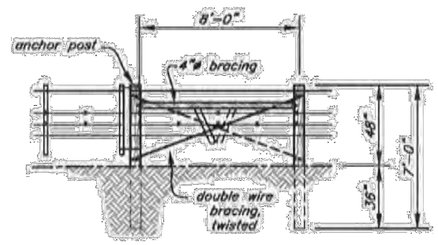

GATE BRACE

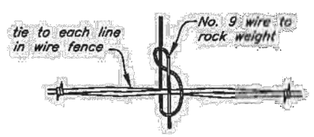

TIEDOWN DETAIL

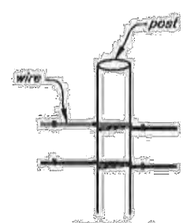

DETAIL A

1. Double wrap all bracing.
2. All brace posts to be 7' long, 3' embedment.
3. Dap braces into posts.
4. Spike braces to posts.

A 3.5' (42") BARBED WIRE FENCE

SCALE: NTS

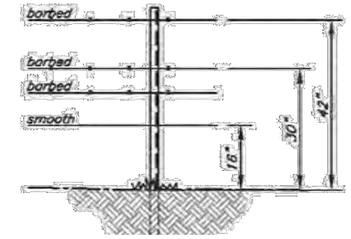

4-STRAND FENCE
3-STRAND BARBED WIRE
1-STRAND SMOOTH (BOTTOM)

B WIRE SPACING

SCALE: NTS

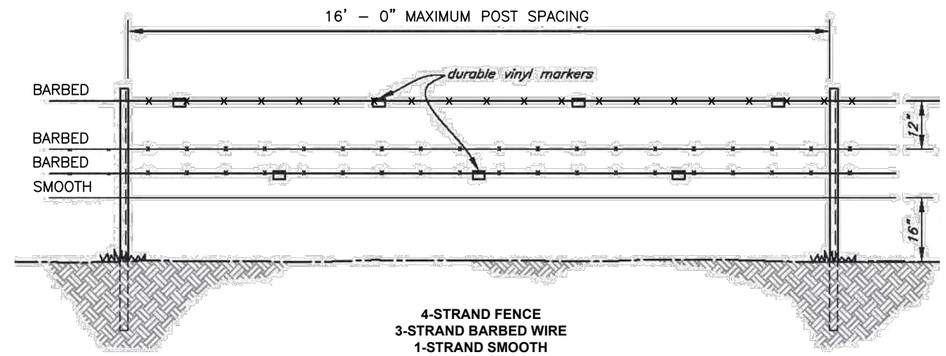

4-STRAND FENCE
3-STRAND BARBED WIRE
1-STRAND SMOOTH
(BOTTOM)

C FENCE SPACING

SCALE: NTS

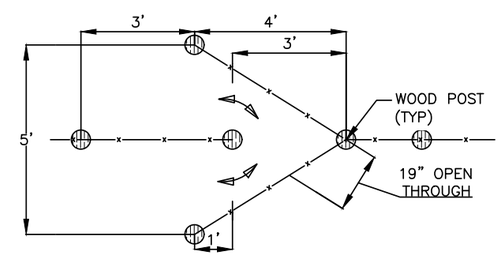

D WALK THROUGH V-GATE PLAN DETAIL

SCALE: NTS

REGISTERED PROFESSIONAL ENGINEER
DAVID BARTON BROOKE
NO. 72417
CIVIL
STATE OF CALIFORNIA
100% DRAFT

DESIGNED: D. BROOKE	SUB SHEET NO.	TITLE OF SHEET	DRAWING NO.
CADD M. GARCIA TECH. REVIEW: J. BLOM	D1.21	BARBED WIRE FENCE REHABILITATE ASH AND BUCKEYE WASTEWATER TREATMENT PLANTS SEQUOIA & KINGS CANYON NATIONAL PARKS	102 / 177,507
DATE: 04/07/2022			PMIS/PKG NO. 317446
			SHEET 59 OF 135

26/04/2022 14:12 MARIO GARCIA G:\CLIENTS\NPS\SEK\317446\DRAWINGS\ASH MOUNTAIN DWGS\9 DETAIL SHEETS AMWWTP\59 - BARBED WIRE FENCE.DWG

ABBREVIATIONS

ACT	ACOUSTICAL CEILING TILE or SUSPENDED ACOUSTICAL CEILING
AFF	ABOVE FINISH FLOOR
AFS	ABOVE FINISH SLAB (1ST FLOOR UNO)
ALT	ALTERNATE
ALUM	ALUMINUM
APPROX	APPROXIMATE(LY)
ARCH	ARCHITECTURAL
ASSY	ASSEMBLY
ASTM	AMERICAN SOCIETY FOR TESTING MATERIALS
BLDG	BUILDING
BOD	BOTTOM OF DECK
CG	CORNER GUARD
CJ	CONTROL JOINT
CL	CENTER LINE
CLG	CEILING
CLR	CLEAR
CMU	CONCRETE MASONRY UNIT
CONC	CONCRETE
CONT	CONTINUOUS
COORD	COORDINATE
DIA	DIAMETER
DR	DOOR
DWG(S)	DRAWING(S)
EF	EXHAUST FAN
ELEC	ELECTRIC
ELEV	ELEVATION
EP	ELECTRICAL PANEL
EPT	EPOXY PAINT
EQ	EQUAL
EXIST	EXISTING
EXP	EXPOSED TO STRUCTURE
EXT	EXTERIOR
FD	FLOOR DRAIN OR FOUNDATION DRAIN
FEB	FIRE EXTINGUISHER BRACKET
FEC	FIRE EXTINGUISHER CABINET
FF	FACTORY FINISH or FINISH FLOOR
FIN	FINISH
FLR	FLOOR
FLASH	FLASHING
FOC	FACE OF CONCRETE
FOS	FACE OF STUD or FACE OF STRUCTURE
FRP	FIBERGLASS REINFORCED PLASTIC PANELS
FT	FOOT
FTG	FOOTING
GA	GAUGE
GALV	GALVANIZED
GL	GLAZING
GB	GYPSUM BOARD
GB	GRAB BAR
GWB	GYPSUM WALL BOARD
GYP	GYPSUM
HM	HOLLOW METAL
INSUL	INSULATION
INT	INTERIOR
IRGWB	IMPACT RESISTANT GYPSUM WALL BOARD
JNT	JOINT
LF	LINEAR FEET
MAX	MAXIMUM
MATL	MATERIAL
MECH	MECHANICAL
MFR	MANUFACTURER
MIN	MINIMUM
MTL	METAL
NIC	NOT IN CONTRACT
NO	NUMBER
NOM	NOMINAL
NTS	NOT TO SCALE
OC	ON CENTER
OCC	OCCUPANT (OCCUPANCY)
OH	OPPOSITE HAND
OPP	OPPOSITE
PL	PLATE
PW	PLYWOOD
PLAM	PLASTIC LAMINATE
PNL	PANEL
PPT	PRESERVATIVE PRESSURE TREATED
PSI	POUNDS PER SQUARE INCH
PT	PAINT
PTD	PAPER TOWEL DISPENSER
RCB	RUBBER COVE BASE
RCP	REFLECTED CEILING PLAN
REQ'D	REQUIRED
RM	ROOM
RO	ROUGH OPENING
SCD	SEAT COVER DISPENSER
SD	SOAP DISPENSER
SF	SQUARE FEET
SHEATH	SHEATHING
SIM	SIMILAR
SLR	SEALER
SND	SANITARY NAPKIN DISPENSER
SNR	SANITARY NAPKIN RECEPTACLE
SOG	SLAB ON GRADE
SPECS	SPECIFICATIONS
SS	STAINLESS STEEL
STRUCT	STRUCTURAL
SUPT	SUPERINTENDENT
SV	SHEET VINYL
TBB	TILE BACKER BOARD
TC	TOP OF CURB
TCNA	TILE COUNCIL OF NORTH AMERICA
TH	TOWEL HOOK
TPD	TOILET PAPER DISPENSER
TO	TOP OF
TOS	TOP OF SLAB or TOP OF STEEL
TOM	TOP OF MASONRY
TRANS	TRANSITION
TYP	TYPICAL
UNO	UNLESS NOTED OTHERWISE
VCT	VINYL COMPOSITION TILE
VG	VALLEY GUTTER
VS	VINYL SCRIM
W	WASHER
WC	WATER CLOSET
WD	WOOD
WIN	WINDOW(S)
WOM	WALK OFF MAT
WRB	WEATHER RESISTIVE BARRIER
WRGWB	WATER RESISTANT GYPSUM WALL BOARD

LEGEND

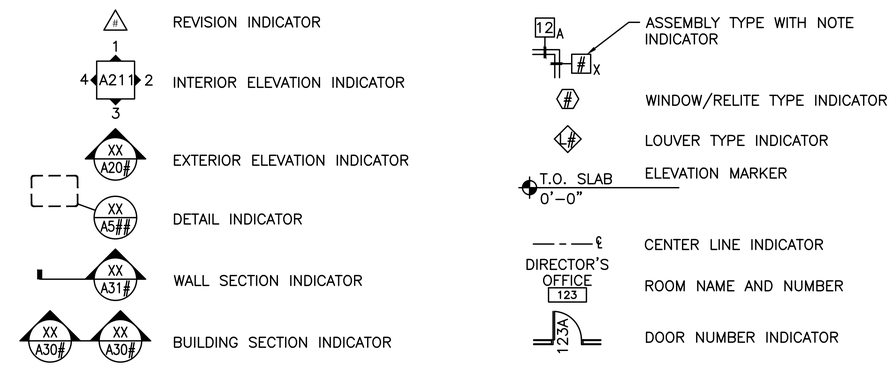

GENERAL NOTES

1: ALL DIMENSIONS ARE TO FACE OF STUDS UNLESS OTHERWISE NOTED.
2: REFER TO SHEET A X.X FOR ASSEMBLY TYPES AND DOOR DETAILS.
3: REFER TO SHEET A X.X FOR FINISH SCHEDULES.
4: FINISH FLOOR ELEVATION TO BE SET BY CONTRACTOR TO ACHIEVE GRADES DELINEATED ON SHEET CXXX. FF=1598.00+/- GRADE OF SITE ADJACENT TO EXTERIOR OF STRUCTURE TO BE SET AT OR BELOW FINISHED FLOOR. (FF=1598.00+/-) TO DRAIN AWAY FROM STRUCTURE.
5: FINISH FLOOR ELEVATION THROUGHOUT BUILDING TO BE CONSTANT
6: INTERIOR PIPING SHALL BE 3/4" MEETING MOST CURRENT PLUMBING CODE REQUIREMENTS.

REGISTERED PROFESSIONAL ENGINEER
DAVID BARTON BROOKE
NO. 72417
CIVIL
STATE OF CALIFORNIA
100% DRAFT

DESIGNED: D. BROOKE CADD: M. GARCIA TECH. REVIEW: J. BLOM DATE: 04/07/2022	SUB SHEET NO. A1.0	TITLE OF SHEET ARCHITECTURAL ABBREV. & LEGEND REHABILITATE ASH AND BUCKEYE WASTEWATER TREATMENT PLANTS SEQUOIA & KINGS CANYON NATIONAL PARKS	DRAWING NO. 102 / 177,507 PMIS/PKG NO. 317446 SHEET 60 OF 135

26/04/2022 14:12 MARIO GARCIA G:\CLIENTS\NPS\SEKI\317446\DRAWINGS\ASH MOUNTAIN DWGS\9_ARCHITECTURAL SHEETS AMWWTP\59 - ARCHITECTURAL NOTES.DWG

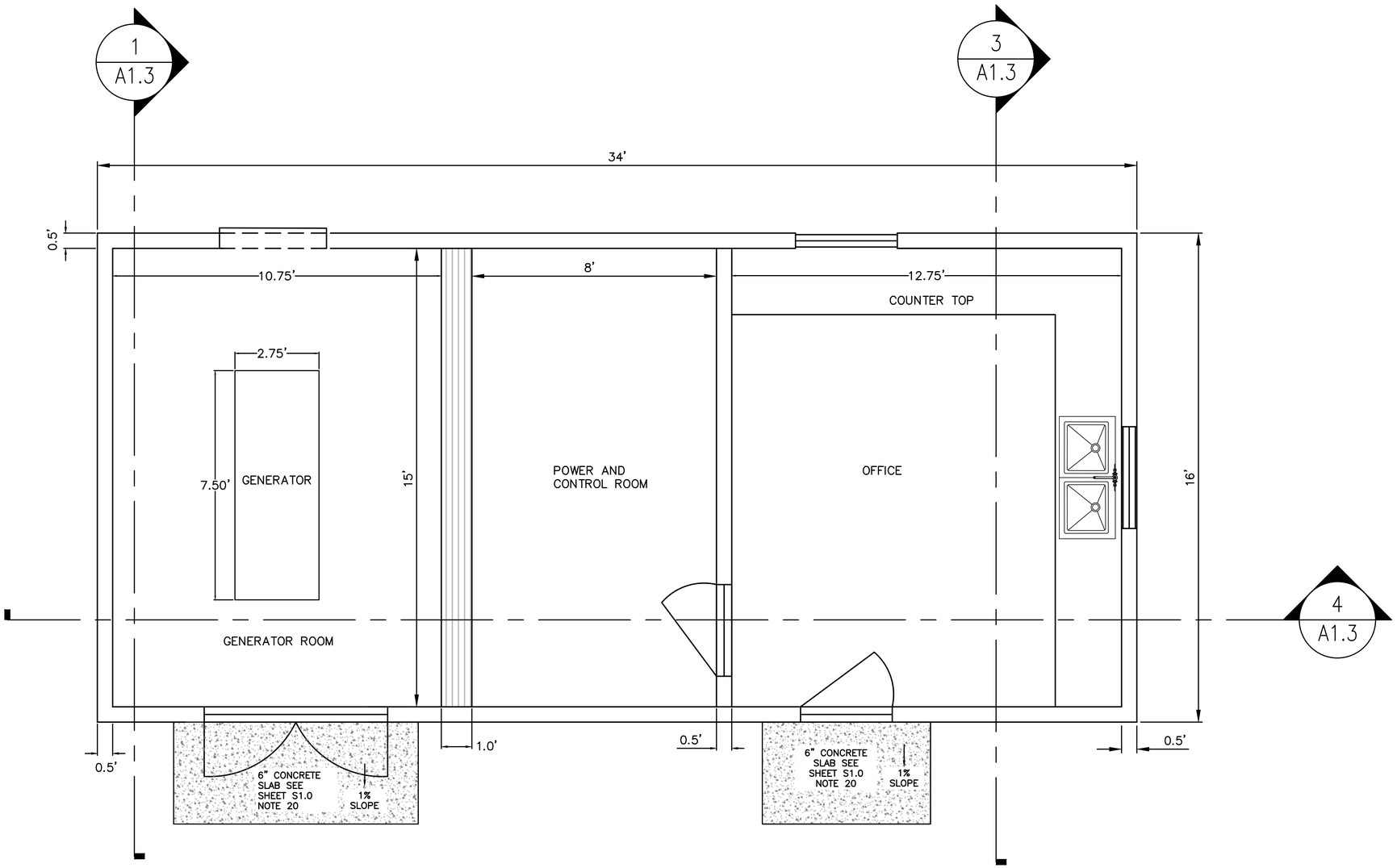

CONTROL BUILDING FLOOR PLAN

REGISTERED PROFESSIONAL ENGINEER
DAVID BARTON BROOKE
NO. 70417
CIVIL
STATE OF CALIFORNIA
100% DRAFT

2' 0 2' 4'
SCALE OF FEET

DESIGNED: D. BROOKE CADD M. GARCIA TECH. REVIEW: J. BLOM DATE: 04/07/2022	SUB SHEET NO. A1.1	TITLE OF SHEET CONTROL BUILDING FLOOR PLAN REHABILITATE ASH AND BUCKEYE WASTEWATER TREATMENT PLANTS SEQUOIA & KINGS CANYON NATIONAL PARKS	DRAWING NO. 102/177,507 PMIS/PKG NO. 317446 SHEET 61 OF 135

26/04/2022 14:24 MARIO GARCIA G:\CLIENTS\NPS\SEKI\317446\DRAWINGS\ASH MOUNTAIN DWGS\9_ARCHITECTURAL SHEETS AMWWTP\60 - CONTROL BUILDING FLOOR PLAN.DWG

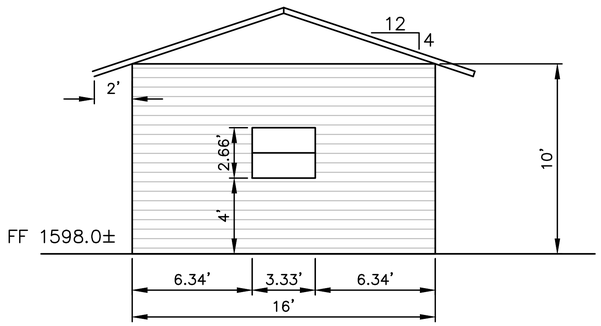

1 A1.2 ELEVATION 1
NTS

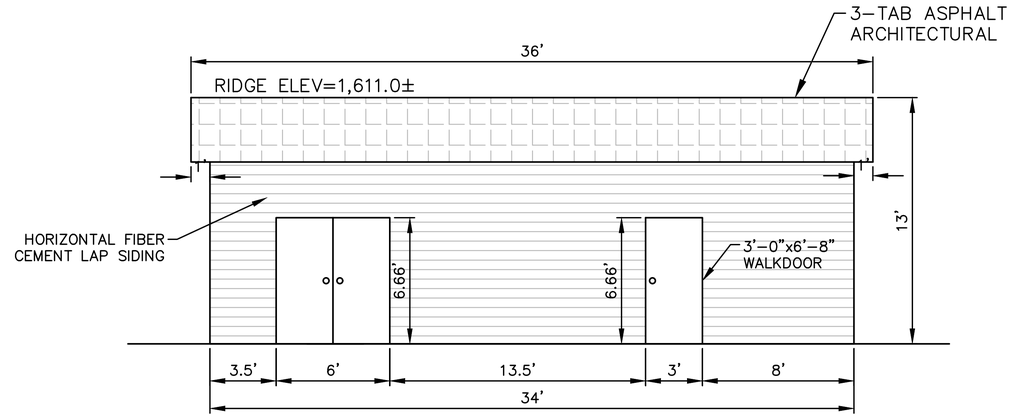

2 A1.2 ELEVATION 2
NTS

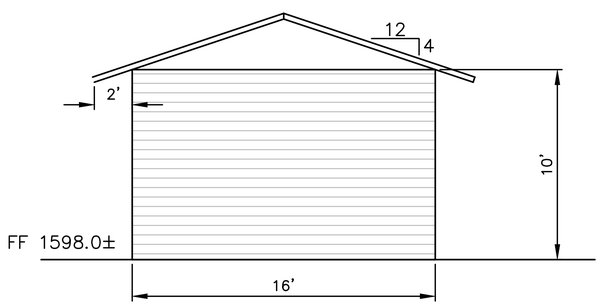

3 A1.2 ELEVATION 3
NTS

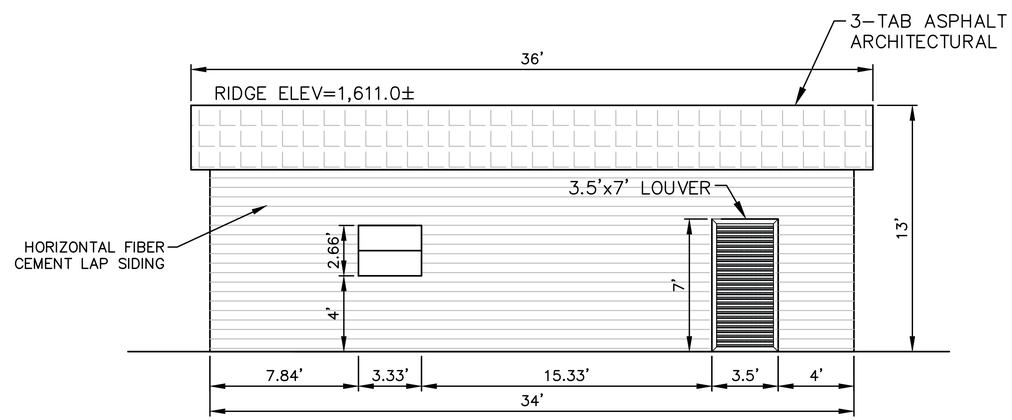

4 A1.2 ELEVATION 4
NTS

REGISTERED PROFESSIONAL ENGINEER
DAVID BARTON BROOKE
NO. 19417
CIVIL
STATE OF CALIFORNIA
100% DRAFT

DESIGNED: D. BROOKE	SUB SHEET NO.	TITLE OF SHEET	DRAWING NO.
CADD M. GARCIA	A1.2	CONTROL BUILDING EXTERIOR ELEVATIONS	102 / 177,507
TECH. REVIEW: J. BLOM		REHABILITATE ASH AND BUCKEYE WASTEWATER TREATMENT PLANTS SEQUOIA & KINGS CANYON NATIONAL PARKS	PMIS/PKG NO. 317446
DATE: 04/07/2022			SHEET 62 OF 135

25/04/2022 15:39 MARIO GARCIA G:\CLIENTS\NPS\SEKI\317446\DRAWINGS\ASH MOUNTAIN DWGS\9_ARCHITECTURAL SHEETS AMWWTP\61 - CONTROL BUILDING EXTERIOR ELEVATIONS.DWG

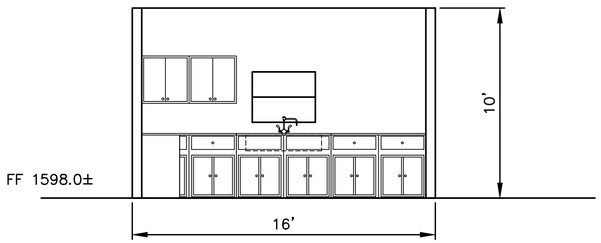

1 A1.3 ELEVATION 1
NTS

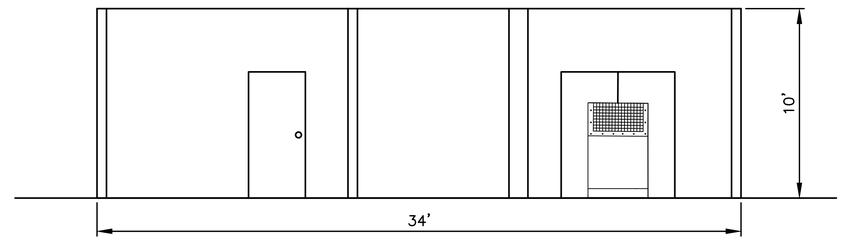

2 A1.3 ELEVATION 2
NTS

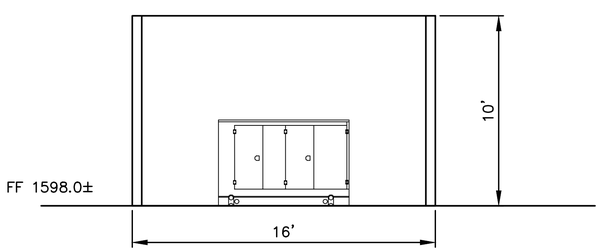

3 A1.3 ELEVATION 3
NTS

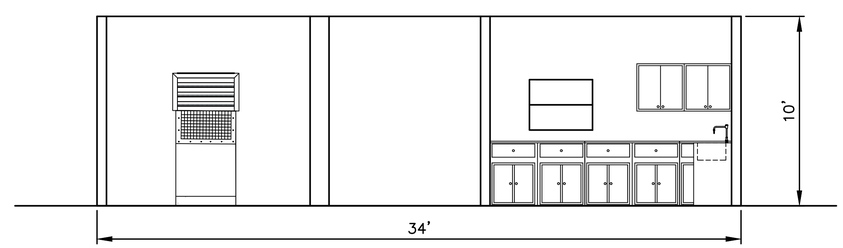

4 A1.3 ELEVATION 4
NTS

REGISTERED PROFESSIONAL ENGINEER
DAVID BARTON BROOKE
NO. 70417
CIVIL
STATE OF CALIFORNIA
100% DRAFT

DESIGNED: D. BROOKE CADD: M. GARCIA TECH. REVIEW: J. BLOM DATE: 04/07/2022	SUB SHEET NO. A1.3	TITLE OF SHEET CONTROL BUILDING INTERIOR ELEVATIONS REHABILITATE ASH AND BUCKEYE WASTEWATER TREATMENT PLANTS SEQUOIA & KINGS CANYON NATIONAL PARKS	DRAWING NO. 102 / 177,507 PMIS/PKG NO. 317446 SHEET 63 OF 135

25/04/2022 15:39 MARIO GARCIA G:\CLIENTS\NPS\SEKI\317446\DRAWINGS\ASH MOUNTAIN DWGS\9_ARCHITECTURAL SHEETS AMWWTP\62 - CONTROL BUILDING INTERIOR ELEVATIONS.DWG

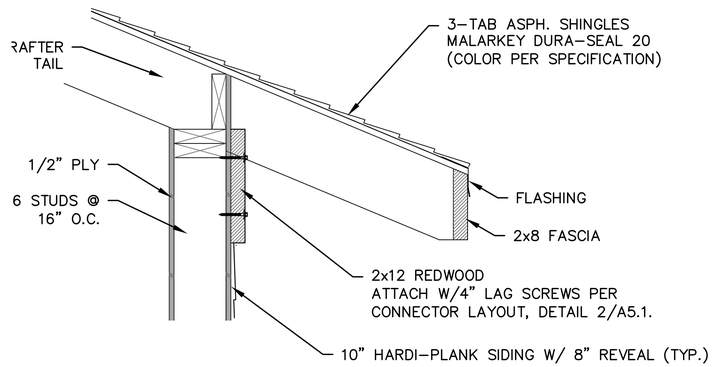

1 TYPICAL TRIM & SOFFIT DETAIL

SCALE: 1 1/2" = 1'-0"

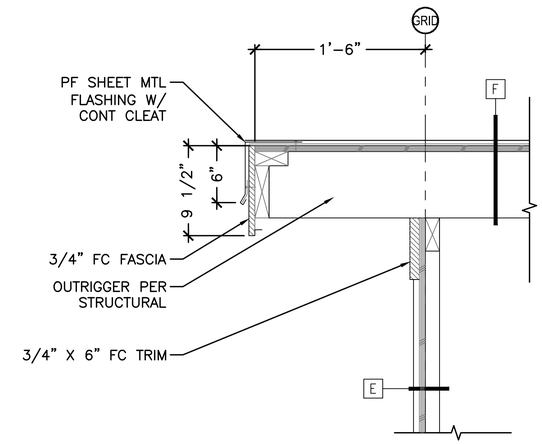

2 RAKE DETAIL

SCALE: 1 1/2" = 1'-0"

REGISTERED PROFESSIONAL ENGINEER
DAVID BARTON BROOKE
NO. 72417
CIVIL
STATE OF CALIFORNIA
100% DRAFT

DESIGNED: D. BROOKE CADD: M. GARCIA TECH. REVIEW: J. BLOM DATE: 04/07/2022	SUB SHEET NO. A1.4	TITLE OF SHEET ROOF DETAILS AMWWTF REHABILITATE ASH AND BUCKEYE WASTEWATER TREATMENT PLANTS SEQUOIA & KINGS CANYON NATIONAL PARKS	DRAWING NO. 102 / 177,507 PMIS/PKG NO. 317446 SHEET 64 OF 135

26/04/2022 14:26 MARIO GARCIA G:\CLIENTS\NPS\SEKI\317446\DRAWINGS\ASH MOUNTAIN DWGS\9_ARCHITECTURAL SHEETS AMWWTP\63 - ARCH ROOF DETAILS.DWG

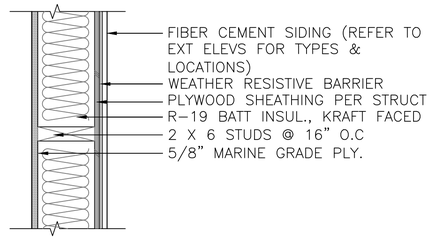

A EXTERIOR WALL

SCALE: 1 1/2" = 1'-0"

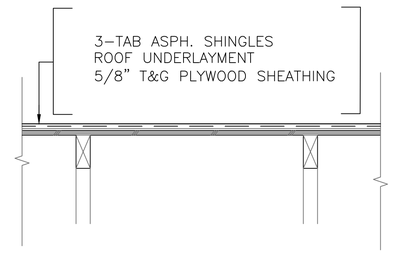

B ROOF ASSEMBLY

SCALE: 1 1/2" = 1'-0"

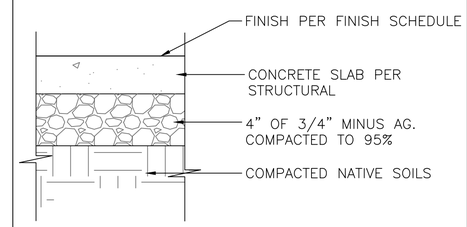

C SLAB ON GRADE

SCALE: 1 1/2" = 1'-0"

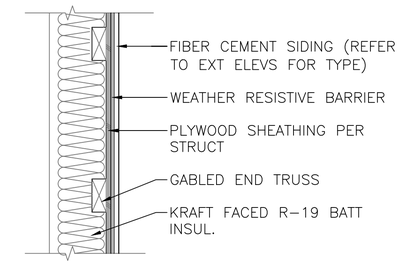

D GABLED END TRUSS

SCALE: 1 1/2" = 1'-0"

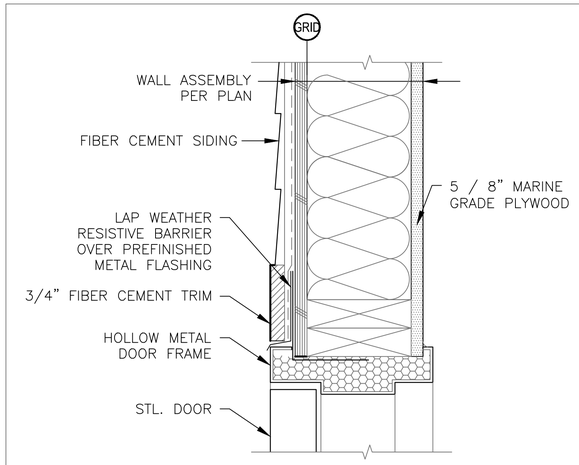

1 EXTERIOR DOOR HEAD

SCALE: 3" = 1'-0"

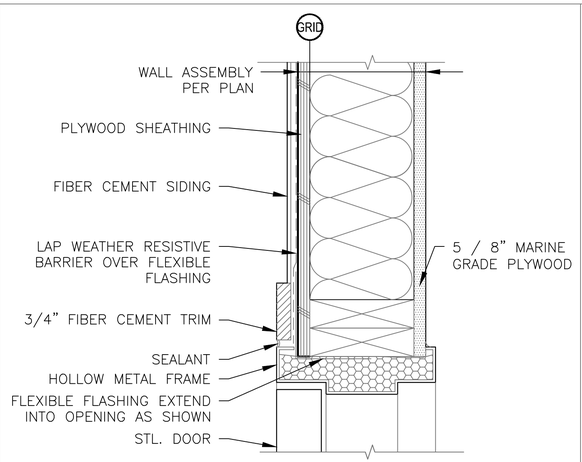

2 EXTERIOR DOOR JAMB

SCALE: 3" = 1'-0"

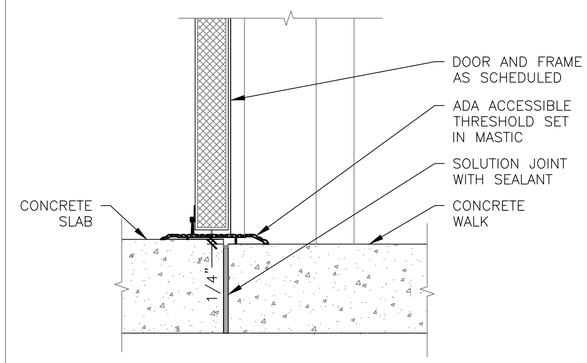

3 TYPICAL THRESHOLD

SCALE: 3" = 1'-0"

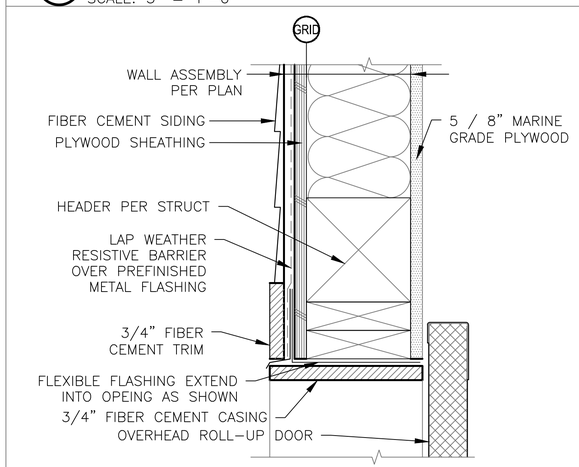

4 HEAD DETAIL

SCALE: 3" = 1'-0"

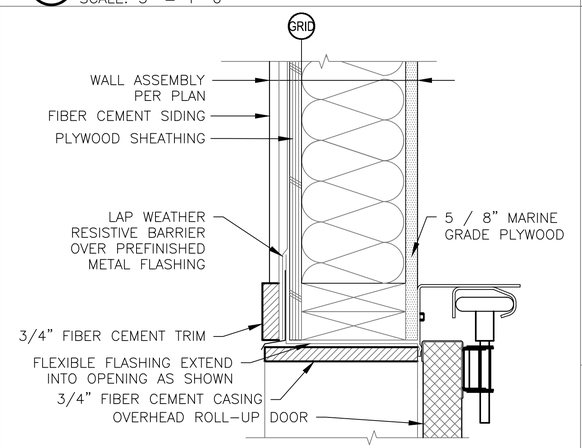

5 OVERHEAD DOOR JAMB

SCALE: 3" = 1'-0"

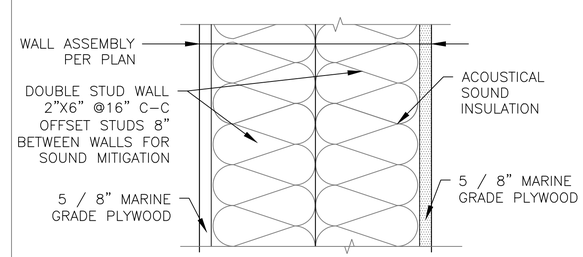

6 INTERIOR SOUND WALL

SCALE: 3" = 1'-0"

REGISTERED PROFESSIONAL ENGINEER
DAVID BARTON BROOKE
NO. 70417
100% DRAFT
CIVIL
STATE OF CALIFORNIA

DESIGNED: D. BROOKE CADD: M. GARCIA TECH. REVIEW: J. BLOM DATE: 04/07/2022	SUB SHEET NO. A1.5	TITLE OF SHEET ARCH DETAILS AMWWTF REHABILITATE ASH AND BUCKEYE WASTEWATER TREATMENT PLANTS SEQUOIA & KINGS CANYON NATIONAL PARKS	DRAWING NO. 102 / 177,507 PMIS/PKG NO. 317446 SHEET 65 OF 135

25/04/2022 15:39 MARIO GARCIA G:\CLIENTS\NPS\SEK\317446\DRAWINGS\ASH MOUNTAIN DWGS\9_ARCHITECTURAL SHEETS AMWWTP\65 - ARCH DETAILS.DWG

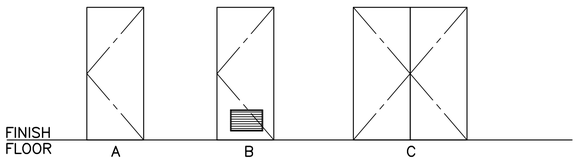

DOOR TYPES

SCALE: NTS

PENDING

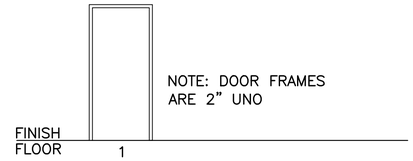

FRAME TYPES

SCALE: NTS

PENDING

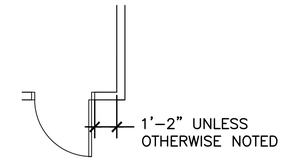

TYPICAL DOOR LOCATION

SCALE: NTS

PENDING

DOOR AND FRAME SCHEDULE

DOOR NUMBER	DOOR					FRAME						FIRE RATING LABEL	HDWR GROUP	REMARKS	DOOR NUMBER
						DETAILS									
	SIZE	TYPE	MATERIAL	FINISH	GLAZING	HEAD	JAMB	THRESH	TYPE	MATERIAL	FINISH				
EXTERIOR DOORS															
S001	3'–6" X 7'–0"	A	STL	FP	–	1/A6.0	2/A6.0	3/A6.0	1	HM	FP	0	H06	②	S001
S002	7'–0"x7'–0"	C	STL	FP	–	4/A6.0	5/A6.0	N/A	N/A	N/A	N/A	0	H08	②	S002
INTERIOR DOORS															
S003	3'–6"x7'–0"	C	STL	FP	–	4/A6.0	5/A6.0	N/A	N/A	N/A	N/A	0	H08	②	S003

DOOR & FRAME SCHEDULE ABBREVIATIONS

FF	FACTORY FINISH
HM	HOLLOW METAL
PT	PAINT
SIM	SIMILAR
STL	STEEL
FP	FIELD PAINT

① ROLL–UP OVERHEAD DOOR
② DOOR HARDWARE SPECIFICATION 087100
A. REFER TO SPECIFICATIONS FOR GLAZING TYPES

INTERIOR FINISH SCHEDULE

ROOM NUMBER	ROOM NAME	BASE		FLOOR		NORTH WALL		EAST WALL		SOUTH WALL		WEST WALL		CEILING		REMARKS	ROOM NUMBER
		MAT'L	FINISH	MAT'L	FINISH	MAT'L	FINISH	MAT'L	FINISH	MAT'L	FINISH	MAT'L	FINISH	MAT'L	FINISH		
FIRST FLOOR																	
100	GENERATOR	N/A	N/A	CONC	LB	FRPW	FP	FRPW	FP	FRPW	FP	FRPW	FP	FRPW	FP		100
101	POWER & CONTROL	N/A	N/A	CONC	LB	PW	FP	PW	FP	PW	FP	PW	FP	GWB	FP		101
102	OFFICE	N/A	N/A	CONC	LB	PW	FP	PW	FP	PW	FP	PW	FP	GWB	FP		102

FINISH SCHEDULE ABBREVIATIONS

BC	BURNISHED CONCRETE	GWB	GYPSUM WALL BOARD
CONC	CONCRETE	L	LINOLEUM
COVE	COVED BASE	LB	LIGHT BROOM & SEALED
CT	CERAMIC TILE	PT	PAINT
EXP	EXPOSED	PW	PLYWOOD
FF	FACTORY FINISH	FRPW	FIRE RATED PLYWOOD
FRP	FIBERGLASS REINFORCED PANEL	RB	RUBBER COVE BASE
FP	FIELD PAINT	WRGWB	WATER RESISTANT GYPSUM WALL BOARD
		UF	UNFINISHED / UNPAINTED
		POL	CLASS A (CREAM) LEVEL 2 (HONED)

DESIGNED: D. BROOKE CADD M. GARCIA TECH. REVIEW: J. BLOM DATE: 04/07/2022	SUB SHEET NO. A1.6	TITLE OF SHEET ARCH SCHEDULES AMWWTF REHABILITATE ASH AND BUCKEYE WASTEWATER TREATMENT PLANTS SEQUOIA & KINGS CANYON NATIONAL PARKS	DRAWING NO. 102 / 177,507 PMIS/PKG NO. 317446 SHEET 66 OF 135

25/04/2022 15:39 MARIO GARCIA G:\CLIENTS\NPS\SEKI\317446\DRAWINGS\ASH MOUNTAIN DWGS\9_ARCHITECTURAL SHEETS AMWWTP\66 – ARCH SCHEDULES.DWG

1000 GENERAL

1001 GENERAL REQUIREMENTS

1. ALL MATERIALS, WORKMANSHIP, DESIGN, AND CONSTRUCTION SHALL CONFORM TO THE DRAWINGS, SPECIFICATIONS, AND THE 2021 INTERNATIONAL BUILDING CODE.

2. STRUCTURAL DRAWINGS SHALL BE USED IN CONJUNCTION WITH ARCHITECTURAL DRAWINGS FOR BIDDING AND CONSTRUCTION. CONTRACTOR SHALL VERIFY DIMENSIONS AND CONDITIONS FOR COMPATIBILITY AND SHALL NOTIFY THE GOVERNMENT OF ANY DISCREPANCIES PRIOR TO CONSTRUCTION.

3. CONTRACTOR SHALL PROVIDE TEMPORARY BRACING FOR THE STRUCTURE AND STRUCTURAL COMPONENTS UNTIL ALL FINAL CONNECTIONS HAVE BEEN COMPLETED IN ACCORDANCE WITH THE PLANS.

4. CONTRACTOR SHALL BE RESPONSIBLE FOR ALL SAFETY PRECAUTIONS AND THE METHODS, TECHNIQUES, SEQUENCES OR PROCEDURES REQUIRED TO PERFORM THE CONTRACTOR'S WORK.

5. CONTRACTOR–INITIATED CHANGES SHALL BE SUBMITTED IN WRITING TO THE GOVERNMENT FOR APPROVAL PRIOR TO FABRICATION OR CONSTRUCTION. CHANGES SHOWN ON SHOP DRAWINGS ONLY WILL NOT SATISFY THIS REQUIREMENT.

6. DRAWINGS INDICATE GENERAL AND TYPICAL DETAILS OF CONSTRUCTION. WHERE CONDITIONS ARE NOT SPECIFICALLY INDICATED BUT ARE OF SIMILAR CHARACTER TO DETAILS SHOWN, SIMILAR DETAILS OF CONSTRUCTION SHALL BE USED, SUBJECT TO REVIEW AND APPROVAL BY THE GOVERNMENT.

7. ALL STRUCTURAL SYSTEMS WHICH ARE TO BE COMPOSED OF COMPONENTS TO BE FIELD ERECTED SHALL BE SUPERVISED BY THE SUPPLIER DURING MANUFACTURING, DELIVER, HANDLING, STORAGE AND ERECTION IN ACCORDANCE WITH INSTRUCTIONS PREPARED BY THE SUPPLIER.

8. THE PROJECT MANUAL FORMS A PART OF THESE GENERAL NOTES. CODES, STANDARDS, AND SPECIFICATIONS, INCLUDING ADDENDA AND SUPPLEMENTS REFERENCE IN THE CONTRACT DOCUMENTS SHALL BE THE LATEST APPROVED ISSUE UNLESS SPECIFICALLY NOTED.

9. NOTES AND DETAILS ON DRAWINGS TAKE PRECEDENCE OVER GENERAL NOTES AND TYPICAL DETAILS. IF CONFLICTS OCCUR BETWEEN THE CONTRACT DRAWINGS AND THE PROJECT MANUAL, IMMEDIATELY NOTIFY THE GOVERNMENT FOR RESOLUTION. DIMENSIONS TAKE PRECEDENCE OVER SCALED DRAWINGS.

10. CONTRACT DOCUMENTS INDICATE INFORMATION SUFFICIENT TO CONVEY DESIGN INTENT. REVIEW CONTRACT DOCUMENTS AND VERIFY FIELD AND EXISTING CONDITIONS. PROMPTLY NOTIFY A/E, PRIOR TO PROCEEDING WITH WORK, IF FURTHER CLARIFICATION OF DESIGN INTENT IS NEEDED.

11. VERIFY ALL DIMENSIONS PRIOR TO CONSTRUCTION AND NOTIFY THE GOVERNMENT OF ANY DISCREPANCIES.

12. PERFORM STRUCTURAL RELATED WORK AND DEVELOP SHOP DRAWINGS CONSIDERING CONTRACT DOCUMENTS IN THEIR ENTIRETY. CONDITIONS NOT SPECIFICALLY DETAILED SHALL BE CONSTRUCTED AS DETAILED FOR SIMILAR WORK.

13. CONTRACT DOCUMENTS REPRESENT THE FINISHED STRUCTURE AND DO NOT INDICATE THE MEANS AND METHODS OF CONSTRUCTION. PROVIDE ALL NECESSARY MEASURES TO PROTECT THE STRUCTURE DURING CONSTRUCTION. COMPLY WITH THE STATE OF CALIFORNIA REGULATIONS. CONSTRUCTION MATERIALS, IF PLACED ON FRAMED FLOORS AND ROOFS, SHALL BE SPREAD OUT SUCH THAT THE DESIGN LIVE LOAD PER SQUARE FOOT IS NOT EXCEEDED. PROVIDE ADEQUATE SHORING IF OVERLOAD IS ANTICIPATED OR WHERE STRUCTURAL ELEMENTS HAVE NOT ATTAINED DESIGN STRENGTH.

14. SUBMIT SHOP DRAWINGS FOR REVIEW BEFORE FABRICATION. CONTRACTOR SHALL REVIEW FOR COMPLETENESS AND COMPLIANCE WITH CONTRACT DOCUMENTS PRIOR TO SUBMISSION TO THE GOVERNMENT. THE GOVERNMENT REVIEW IS FOR GENERAL CONFORMANCE WITH DESIGN INTENT AND DOES NOT CONSTITUTE AN AUTHORIZATION TO DEVIATE FROM TERMS AND CONDITIONS OF CONTRACT. WHEN INDICATED, THE SUBMITTAL SHALL BE SIGNED AND SEALED BY A PROFESSIONAL CIVIL OR STRUCTURAL ENGINEER LICENSED IN THE STATE OF CALIFORNIA. MAINTAIN AT SITE A COPY OF REVIEWED AND ACCEPTED SUBMITTALS.

15. MODIFICATIONS AND SUBSTITUTIONS MUST BE ACCEPTED IN WRITING BY ENGINEER. NO MODIFICATION OR SUBSTITUTION WILL BE ACCEPTED VIA SHOP DRAWING REVIEW. MANUFACTURED MATERIALS SHALL BE APPROVED BY THE GOVERNING CODE AUTHORITY PRIOR TO THEIR USE. ADHERE TO ALL CONDITIONS OF THOSE APPROVALS.

16. EQUIPMENT MANUFACTURER SHALL PROVIDE EQUIPMENT ANCHORAGE TO THE STRUCTURE MEETING THE REQUIREMENTS OF ASCE/SEI 7, CHAPTER 13.6. USE ISOLATORS, FASTENERS AND BRACING HAVING CURRENT ICC–ES REPORTS. EQUIPMENT ANCHORAGE SHALL BE CAPABLE OF TRANSMITTING CODE REQUIRED LATERAL LOADS BUT IN NO EVENT LESS THAN A LATERAL LOAD EQUIVALENT TO 30 PERCENT OF THE OPERATING WEIGHT OF EQUIPMENT. SECURE SUSPENDED EQUIPMENT WITH LATERAL OR SWAY BRACING HAVING CURRENT ICC–ES REPORTS.

17. PIPING AND DUCTWORK BRACING SHALL BE IN ACCORDANCE WITH THE SHEET METAL AND AIR CONDITIONING CONTRACTORS' NATIONAL ASSOCIATION (SMACNA) "SEISMIC RESTRAINT MANUAL – GUIDELINES FOR MECHANICAL SYSTEMS", INCLUDING ADDENDA.

18. "TYPICAL DETAILS" ARE APPLICABLE THROUGHOUT CONSTRUCTION DOCUMENTS AND MAY NOT BE SPECIFICALLY REFERENCED THEREIN. CONTRACTOR IS RESPONSIBLE FOR IDENTIFYING THESE TYPICAL DETAILS AND UNDERSTANDING EXTENT OF THEIR APPLICATION PRIOR TO PERFORMING WORK.

19. UNLESS SPECIFICALLY SHOWN ON THE PLANS NO STRUCTURAL MEMBER SHALL BE CUT, DRILLED OR NOTCHED WITHOUT PRIOR WRITTEN AUTHORIZATION FROM THE STRUCTURAL ENGINEER.

20. SEE ARCHITECTURAL DRAWINGS FOR:
    20.1. DIMENSIONS NOT SHOWN ON STRUCTURAL DRAWINGS.
    20.2. OPENINGS AND ARCHITECTURAL TREATMENTS.

21. SEE MECHANICAL, ELECTRICAL, PLUMBING DRAWINGS FOR:
    A. SIZE AND LOCATION OF EQUIPMENT PADS, EQUIPMENT ANCHORAGE TO STRUCTURE AND EQUIPMENT WEIGHTS.
    B. ANCHORAGE OF DUCTWORK, PIPING, ELECTRICAL CONDUITS TO STRUCTURE.
    C. ELECTRICAL CONDUIT RUNS, OUTLETS AND BOXES IN CONCRETE SLABS AND WALLS.
    D. PIPE SLEEVES, TRENCHES, AND OPENINGS THROUGH WALLS AND SLABS FOR DUCTWORK, PIPE RUNS, ELECTRICAL CONDUIT RUNS.

22. NON–STRUCTURAL ITEMS, INCLUDING BUT NOT LIMITED TO, ARCHITECTURAL CLADDING, ETC., WHEN NOT DETAILED ON THE STRUCTURAL OR ARCHITECTURAL DRAWINGS, SHALL BE THE DESIGN RESPONSIBILITY OF THE CONTRACTOR. THESE NON–STRUCTURAL ITEMS CAN BE SUPPORTED BY THE PRIMARY STRUCTURE BUT SHALL NOT IMPOSE TORSIONAL LOADS ONTO THE PRIMARY SUPPORT MEMBERS. PROVIDE BRACES, KICKERS, STIFFENERS, ETC. AS NECESSARY TO ELIMINATE TORSIONAL LOADS AT NO ADDITIONAL COSTS TO THE OWNER.

1002 CODE REQUIREMENTS

1. ALL DESIGN AND CONSTRUCTION SHALL CONFORM TO THE 2021 INTERNATIONAL BUILDING CODE AS ADOPTED BY THE LOCAL JURISDICTION.

1003 DESIGN LOADING CRITERIA

LIVE:
ROOF.....PER STRUCTURE

DEAD:
ROOF.....PER STRUCTURE

SNOW:
GROUND SNOW LOAD, P_G.....5 PSF

WIND:
BASIC WIND SPEED.....106 MPH

SEISMIC DESIGN DATA:
OCCUPANCY CATEGORY.....IV
IMPORTANCE FACTOR, I.....1.5
MAPPED SPECTRAL RESPONSE, S_S.....0.519 G
ACCELERATIONS, S_1.....0.204 G
SITE CLASS.....D (DEFAULT)
SPECTRAL RESPONSE COEFFICIENT, S_{DS}.....0.479
S_{D1}.....0.299
SEISMIC DESIGN CATEGORY.....D

1004 GEOTECHNICAL INVESTIGATION/INFORMATION

1. DESIGN OF FOUNDATION SYSTEM BASED ON PRESUMPTIVE LOAD BEARING VALUES FOR CLAY AS GIVEN IN IBC TABLE 1806.2. CONTRACTOR SHALL NOTIFY GOVERNMENT OF EXPANSIVE SOIL, ORGANIC SOILS, OR OTHER CHARACTERISTICS THAT AFFECT THE SOILS BEARING CAPACITY.

ADOPTED DESIGN PARAMETERS ARE AS FOLLOWS:

ALLOWABLE BEARING CAPACITY	2,000 PSF.
ALLOWABLE PASSIVE EARTH PRESSURE	100 PCF
COHESION	130 PSF
COEFFICIENT OF FRICTION	N/A
SOIL PROFILE	SITE CLASS D

1005 REQUIRED SUBMITTAL PROCEDURES

THE CONTRACTOR SHALL PROVIDE THE FOLLOWING SUBMITTALS TO THE ENGINEER OF RECORD FOR APPROVAL FOUR WEEKS PRIOR TO POUR OF CONCRETE OR FABRICATION.

1. PRE ENGINEERED STRUCTURAL COMPONENTS CALCULATIONS BEARING THE SEAL AND SIGNATURE OF A LICENSED CALIFORNIA STATE STRUCTURAL ENGINEER SHALL BE SUBMITTED FOR PREFABRICATED PLATED WOOD TRUSSES.

2. SHOP DRAWINGS
    2.1. SHOP DRAWINGS SHALL BE SUBMITTED TO THE ARCHITECT AND ENGINEER OF RECORD FOR APPROVAL PRIOR TO FABRICATION. IF SHOP DRAWINGS DIFFER FROM THE APPROVED DESIGN DRAWINGS, NEW DESIGN DRAWINGS BEARING THE SEAL AND SIGNATURE OF A LICENSED CALIFORNIA STATE STRUCTURAL ENGINEER SHALL BE SUBMITTED ALONG WITH THE SHOP DRAWINGS TO THE APPROPRIATE JURISDICTION FOR APPROVAL PRIOR TO FABRICATION.
    2.2. SHOP DRAWINGS ARE REQUIRED FOR: CONCRETE REINFORCEMENT, AND PREFABRICATED WOOD TRUSSES.
3. CONCRETE MIX DESIGN
    RE: SECTION 3001
4. SUBSTITUTION REQUEST
5. DEFERRED SUBMITTAL

1006 CODE REQUIRED SPECIAL INSPECTIONS

1. THE CONTRACTOR SHALL BE RESPONSIBLE TO COORDINATE ALL INSPECTIONS REQUIRED BY THE LOCAL BUILDING DEPARTMENT. IN ADDITION TO INSPECTIONS REQUIRED BY THE LOCAL BUILDING DEPARTMENT, THE OWNER OR A REGISTERED DESIGN PROFESSIONAL IN RESPONSIBLE CHARGE ACTING AS THE OWNER'S AGENT SHALL EMPLOY ONE OR MORE SPECIAL INSPECTORS TO PROVIDE INSPECTIONS FOR ITEMS NOTED IN IBC SECTION 1704 WHICH ARE SUMMARIZED IN THE SPECIAL INSPECTION SCHEDULE ON SHEET S0.3.

2. THE SPECIAL INSPECTOR SHALL BE A QUALIFIED PERSON EMPLOYED BY AN APPROVED AGENCY. THE SPECIAL INSPECTOR SHALL KEEP RECORDS OF INSPECTIONS AND FURNISH THEM TO THE BUILDING OFFICIAL AND THE ENGINEER OF RECORD ON A REGULAR BASIS. A FINAL REPORT DOCUMENTING REQUIRED SPECIAL INSPECTIONS AND THE CORRECTION OF ANY DISCREPANCIES SHALL BE PROVIDED PRIOR TO COMPLETION OF BUILDING FINISHES. WHERE FABRICATION OF STRUCTURAL COMPONENTS AND ASSEMBLIES IS BEING PERFORMED ON THE PREMISES OF A FABRICATOR'S SHOP, SPECIAL INSPECTION OF THE FABRICATED ITEMS SHALL BE REQUIRED EXCEPT WHERE THE FABRICATOR IS REGISTERED AND APPROVED TO DO SUCH WORK WITHOUT SPECIAL INSPECTION IN ACCORDANCE WITH IBC SECTION 1704.2.5. PERIODIC INSPECTION ALLOWS INSPECTION AT INTERVALS NECESSARY TO CONFIRM THAT WORK REQUIRING SPECIAL INSPECTION IS IN COMPLIANCE WITH REQUIREMENTS. CONTINUOUS SPECIAL INSPECTION REQUIRES THAT THE INSPECTOR BE ONSITE AT ALL TIMES THAT WORK REQUIRING SPECIAL INSPECTION IS PERFORMED.

REGISTERED PROFESSIONAL ENGINEER
DAVID BARTON BROOKE
NO. 17417
100% DRAFT
CIVIL
STATE OF CALIFORNIA

1007 STRUCTURAL OBSERVATION SERVICES

1. STRUCTURAL OBSERVATION SHALL BE REQUIRED. STRUCTURAL OBSERVATION SHALL BE THE VISUAL OBSERVATION OF THE STRUCTURAL SYSTEM BY A REGISTERED DESIGN PROFESSIONAL FOR GENERAL CONFORMANCE TO THE APPROVED CONSTRUCTION DOCUMENTS AT SIGNIFICANT CONSTRUCTION STAGES AND AT COMPLETION OF THE STRUCTURAL SYSTEM. STRUCTURAL OBSERVATION DOES NOT INCLUDE OR WAIVE THE RESPONSIBILITY FOR REQUIRED SPECIAL INSPECTION AS NOTED IN SECTION 1006 OR FOR INSPECTIONS REQUIRED BY THE LOCAL JURISDICTION. THE OWNER OR OWNER'S AGENT SHALL RETAIN A REGISTERED DESIGN PROFESSIONAL TO PERFORM STRUCTURAL OBSERVATIONS FOR ITEMS LISTED WITHIN THE STRUCTURAL OBSERVATION SCHEDULE. RE: S0.3

2. THE REGISTERED DESIGN PROFESSIONAL SHALL KEEP RECORDS OF STRUCTURAL OBSERVATIONS AND FURNISH THEM TO THE BUILDING OFFICIAL AND THE OWNER ON A REGULAR BASIS. A FINAL DOCUMENT NOTING REQUIRED STRUCTURAL OBSERVATIONS SHALL BE COMPLETED AND THE CORRECTION OF ANY DISCREPANCIES SHALL BE PROVIDED TO THE BUILDING OFFICIAL AND THE OWNER PRIOR TO ISSUANCE OF CERTIFICATE OF OCCUPANCY.

1008 QUALITY ASSURANCE

1. CONTRACTOR SHALL SUBMIT MATERIAL CERTIFICATION OR LABORATORY TEST REPORTS CERTIFYING MATERIALS ARE OF IDENTIFIABLE TEST STOCK, COMPLYING WITH PROJECT SPECIFICATIONS, GOVERNMENT AND, UPON REQUEST, TO GOVERNING CODE AUTHORITY. IF LABORATORY TEST REPORTS CANNOT BE MADE AVAILABLE, APPROVED AGENCY WILL PERFORM TESTS AS DIRECTED BY THE A/E. CONTRACTOR SHALL PAY FOR COSTS RELATED TO TESTS AND INSPECTIONS OF UNIDENTIFIABLE MATERIALS, MATERIALS FURNISHED WITHOUT LABORATORY TEST REPORTS, MATERIALS FOUND DEFICIENT AFTER INITIAL TESTS AND INSPECTIONS, AND/OR MATERIALS REPLACING DEFICIENT MATERIALS.

2000 FOUNDATION

1. DESIGN OF FOUNDATION SYSTEM BASED ON GEOTECHNICAL INVESTIGATION/INFORMATION SEE SECTION 1004.

2. DESIGN OF FOUNDATION SYSTEM BASED ON PRESUMPTIVE LOAD BEARING VALUES FOR CLAY AS GIVEN IN IBC TABLE 1806.2. CONTRACTOR SHALL NOTIFY GOVERNMENT OF EXPANSIVE SOIL, ORGANIC SOILS, OR OTHER CHARACTERISTICS THAT AFFECT THE SOILS BEARING CAPACITY.

3. CONTINUOUS SPREAD FOOTING DESIGN BASED ON AN ALLOWABLE NET BEARING PRESSURE OF 1500 PSF. BOTTOM OF FOOTINGS SHALL BE A MINIMUM OF 24 INCHES BELOW LOWEST ADJACENT FLOOR OR GRADE AND SUPPORTED ON A MINIMUM OF 6 INCHES OF PROPERLY COMPACTED FILL. FOOTING DIMENSIONS SHALL NOT BE LESS THAN 30 INCHES CONTINUOUS SPREAD FOOTINGS.

4. RESISTANCE TO LATERAL LOADS PROVIDED BY PASSIVE EARTH PRESSURES AND COHESION OF CLAY. ALLOWABLE COHESION IS 130 PSF AND ALLOWABLE PASSIVE PRESSURE FOR SIDES CAST AGAINST UNDISTURBED OR RECOMPACTED SOIL IS EQUIVALENT TO A FLUID DENSITY OF 100 PCF.

5. FOUNDATIONS MAY BE CAST DIRECTLY AGAINST EXCAVATIONS PROVIDED EXCAVATION IS CAPABLE OF MAINTAINING A VERTICAL CUT WITHOUT SLOUGHING. FOUNDATION DIMENSION SHALL BE ENLARGED BY AN ADDITIONAL ONE INCH IN THE DIRECTION OF THE SIDE CAST AGAINST EARTH.

6. CONCRETE SHALL NOT BE PLACED ON FROZEN GRADE. IF FOOTING IS SUBJECT TO FREEZING TEMPERATURES AFTER FOUNDATION CONSTRUCTION, THEN FOOTING SHALL BE ADEQUATELY PROTECTED FROM FREEZING.

7. EXCAVATION, BACKFILL, AND COMPACTION SHALL BE DONE IN STRICT ACCORDANCE WITH INTERNATIONAL BUILDING CODE.

DESIGNED: D. BROOKE	SUB SHEET NO.	TITLE OF SHEET	DRAWING NO.
CADD M. GARCIA	S1.0	STRUCTURAL NOTES 1	102 / 177,507
TECH. REVIEW: J. BLOM		REHABILITATE ASH AND BUCKEYE WASTEWATER TREATMENT PLANTS SEQUOIA & KINGS CANYON NATIONAL PARKS	PMIS/PKG NO. 317446
DATE: 04/07/2022			SHEET 67 OF 135

25/04/2022 15:40 MARIO GARCIA G:\CLIENTS\NPS\SEKI\317446\DRAWINGS\ASH MOUNTAIN DWGS\10_STRUCTURAL SHEETS AMWTP\67-70 – STRUCTURAL NOTES.DWG

8. DO NOT PERMIT ANY PERSON TO DESCEND INTO TRENCHES OR EXCAVATIONS GREATER THAN FOUR FEET IN DEPTH UNLESS NECESSARY PERMIT FROM STATE OF CALIFORNIA DIVISION OF INDUSTRIAL SAFETY IS OBTAINED PRIOR TO ISSUANCE OF BUILDING OR GRADING PERMIT. CONTRACTOR TO PROVIDE FOR DESIGN, PERMIT, AND INSTALLATION OF ALL SHORING AND SHEATHING NECESSARY TO SAFELY RETAIN EARTH BANKS.

9. CONTRACTOR TO PROVIDE FOR DEWATERING OF EXCAVATIONS FROM SURFACE WATER, GROUNDWATER OR SEEPAGE. DEWATERING SHALL EFFECTIVELY ELIMINATE ANY HYDROSTATIC PRESSURE ON SHORING. ENSURE THAT CONTAMINATED WATER IS NOT DISPOSED OF IN PUBLIC SEWER OR STORM DRAIN SYSTEM AND ENSURE THAT DIRTY WATER IS NOT DISPOSED OF INTO PUBLIC RIGHT–OF–WAY.

10. FOR PIT WALLS AND BUILDING WALLS BELOW GRADE, BRACING AND SHORING SHALL REMAIN IN PLACE UNTIL ATTACHED FLOORS ARE PLACED AND CURED FOR AT LEAST 7 DAYS.

3000 CONCRETE

3001 CAST–IN–PLACE CONCRETE

1. ALL CONCRETE WORK SHALL CONFORM TO THE STANDARDS OF THE AMERICAN CONCRETE INSTITUTE, ACI 301 "SPECIFICATIONS FOR STRUCTURAL CONCRETE" AND ACI 318 "BUILDING CODE REQUIREMENTS FOR STRUCTURAL CONCRETE", WITH MODIFICATIONS AS NOTED IN THE CONTRACT DOCUMENTS.

2. CONCRETE SHALL ATTAIN THE FOLLOWING MINIMUM COMPRESSIVE STRENGTH AT 28–DAY (f'_c) UNLESS NOTED OTHERWISE:
   - 2.1. CONTINUOUS FOOTINGS: 4500 PSI, NORMAL WEIGHT.
   - 2.2. SLABS–ON–GRADE: 4500 PSI, NORMAL WEIGHT.

3. UNLESS NOTED OTHERWISE HEREIN, CONCRETE IS ASSIGNED TO EXPOSURE CLASSES F2, S0, W0, AND C0, AS DEFINED IN ACI 318.

4. PORTLAND CEMENT SHALL CONFORM TO ASTM C150, TYPE II.

5. CONCRETE MIX DESIGNS SHALL NOT EXCEED PASTE VOLUME OF 25%.

6. CONCRETE MIX DESIGNS SHALL CONTAIN MINIMUM 15% FLYASH CONTENT

7. AGGREGATES FOR NORMAL WEIGHT CONCRETE SHALL CONFORM TO ASTM C33. NORMAL WEIGHT CONCRETE SHALL HAVE A DRY UNIT WEIGHT OF 150 +/– PCF.

8. MAXIMUM AGGREGATE SIZE SHALL BE 1.5 INCHES, BUT NO LARGER THAN (A) 1/5 THE NARROWEST DIMENSION BETWEEN SIDES OF FORMS, (B) 1/3 THE DEPTH OF SLABS, OR (C) 3/4 THE MINIMUM CLEAR SPACING BETWEEN INDIVIDUAL REINFORCING BARS OR WIRES, BUNDLES OF BARS, OR DUCTS.

9. MAXIMUM SLUMP SHALL BE 4 INCHES TYPICALLY UNLESS A HIGH–RANGE WATER REDUCING ADMIXTURE (SUPERPLASTICIZER) IS USED IN THE CONCRETE MIX PROPORTIONS THEN A MAXIMUM SLUMP OF 6 INCHES TYPICALLY.

10. CONCRETE SHRINKAGE SHALL BE LIMITED TO 0.005 PERCENT AS DETERMINED BY ASTM C157.

11. WATER CEMENT RATIO SHALL NOT EXCEED 0.45.

12. CONCRETE MIX PROPORTIONING SHALL BE BASED ON FIELD EXPERIENCE AND/OR TRIAL MIXTURES. SUBMIT CONCRETE MIX PROPORTIONING DATA, INCLUDING HISTORICAL STRENGTH RECORDS AND/OR RESULTS OF TRIAL MIXTURES, FOR EACH TYPE AND COMPRESSIVE STRENGTH OF CONCRETE. CONCRETE MIX PROPORTIONING SHALL BE SIGNED AND SEALED BY A PROFESSIONAL CIVIL OR STRUCTURAL ENGINEER LICENSED IN THE STATE OF CALIFORNIA AND SHALL BE SUBMITTED TO THE GOVERNMENT FOR REVIEW AND APPROVAL.

13. CONCRETE MIXING SHALL CONFORM TO ASTM C94.

14. SUBMIT SHOP DRAWINGS INDICATING LOCATIONS OF CONCRETE CONSTRUCTION JOINTS TO THE A/E FOR REVIEW AND APPROVAL PRIOR TO PLACING CONCRETE. LOCATE CONSTRUCTION JOINTS TO MINIMIZE EFFECTS OF SHRINKAGE AND AT THE POINTS OF LOW STRESS.

15. THE OUTSIDE DIAMETER OF CONDUITS AND PIPES EMBEDDED IN WALLS SHALL NOT EXCEED 1/3 THE OVERALL THICKNESS OF SLAB OR WALL IN WHICH THEY ARE EMBEDDED. LOCATE CONDUITS AND PIPES WITHIN THE MIDDLE THIRD OF WALLS AND NO CLOSER THAN 3 DIAMETERS ON CENTER WITH A CLEAR SPACING NOT LESS THAN 4 INCHES. CROSSING OF ELECTRICAL CONDUIT IS NOT PERMITTED WITHOUT THE PRIOR WRITTEN CONSENT OF THE ENGINEER.

16. PROVIDE SLEEVES FOR ELECTRICAL AND PLUMBING OPENINGS. IF CONFLICT OCCURS BETWEEN REINFORCING AND SLEEVES, REPOSITION REINFORCING OR SLEEVES OR BOTH. DO NOT CUT ANY REINFORCING. CORING IS NOT PERMITTED.

17. PRIOR TO PLACING CONCRETE, REINFORCING BARS, EMBEDDED PLATES, ANCHOR BOLTS, AND OTHER CONCRETE EMBEDMENTS SHALL BE WELL SECURED IN POSITION.

18. CONCRETE PLACEMENT SHALL CONFORM TO ACI 304.

19. CONCRETE SHALL BE MAINTAINED ABOVE 50 FAHRENHEIT AND IN A MOIST CONDITION FOR A MINIMUM OF 7 DAYS AFTER PLACEMENT UNLESS OTHERWISE ACCEPTED BY ENGINEER.

20. HOT WEATHER PLACEMENT SHALL BE IN ACCORDANCE WITH ACI 305R.

21. COLD WEATHER PLACEMENT SHALL BE IN ACCORDANCE WITH ACI 306R.

22. SLAB–ON–GRADE DESIGN IN ACCORDANCE WITH ACI 360R–10

23. UNLESS SHOWN OTHERWISE CONCRETE PADS AND SLAB ON GRADE SHALL BE 6 INCHES THICKNESS AND REINFORCED WITH #4 BAR @ 18 INCHES ON CENTER IN BOTH DIRECTIONS AT MID DEPTH OF THE SLAB.

22. MINIMUM SLAB–ON–GRADE THICKNESS 6 INCHES AT THINNEST POINT (TYPICALLY AT FLOOR DRAINS)

23. PROVIDE CONTROL JOINTS AND/OR ADEQUATE REINFORCING STEEL AT RE–ENTRANT CORNERS IN SLABS–ON–GRADE, RE:1/S1.0

24. USE OF STAGGERED OR OFFSET CONTROL JOINTS IN SLABS–ON–GRADE IS NOT PERMITTED.

25. THE EXISTING TANKS AND LIFT STATION THAT ARE TO REMAIN WILL BE VISUALLY INSPECTED BY CONTRACTOR FOR ANY SIGNS OF DISTRESS OR DETERIORATION. THEY WILL ALSO BE TESTED BY TACTILE (SOUNDING) METHODS BY AN INDIVIDUAL EXPERIENCED IN TESTING CONCRETE FOR SPALLING AND DELAMINATION. CONTRACTOR TO INFORM THE GOVERNMENT OF ANY SIGNS OF DAMAGE IMMEDIATELY.

26. THE EXISTING TANKS, LIFT STATION, AND PIPES WILL BE FILLED WITH WATER AND CHECKED FOR ANY LEAKS BY CONTRACTOR. CONTRACTOR TO INFORM THE GOVERNMENT OF ANY SIGNS OF DAMAGE IMMEDIATELY.

3002 REINFORCING STEEL

1. REINFORCING STEEL SHALL BE PLACED IN ACCORDANCE WITH AMERICAN CONCRETE INSTITUTE ACI 318 "BUILDING CODE REQUIREMENTS FOR STRUCTURAL CONCRETE" AND CONCRETE REINFORCING STEEL INSTITUTE (CRSI) "MANUAL OF STANDARD PRACTICE".

2. REINFORCING STEEL SHALL CONFORM TO ASTM A615, GRADE 60, UNLESS NOTED OTHERWISE. BARS TO BE WELDED SHALL CONFORM TO LOW ALLOW ASTM A706.

3. ANCHORS SHALL CONFORM TO ASTM F1554 WITH A YIELD STRENGTH OF 55 KSI.

4. PREPARE REINFORCING STEEL SHOP DRAWINGS IN ACCORDANCE TO ACI 315, PART B. SHOP DRAWINGS MAY BE PREPARED MANUALLY OR BE COMPUTER. SHOW REINFORCING PLACEMENT, SPLICE LOCATIONS, REINFORCING LENGTHS, DETAILS, ELEVATIONS, BEND DETAILS, ETC. SUBMIT TO A/E FOR REVIEW PRIOR TO FABRICATION. PROMPTLY NOTIFY A/E PRIOR TO DEVELOPING REINFORCING STEEL SHOP DRAWINGS IF INSUFFICIENT CLEAR DISTANCES BETWEEN REINFORCING STEEL OR OTHER CONGESTION IS ENCOUNTERED. DEVIATIONS FROM THE CONTRACT DOCUMENTS SHALL BE CLEARLY IDENTIFIED ON THE SHOP DRAWINGS. IF SUBMITTAL IS PARTIAL, CLEARLY INDICATE ITEMS EXCLUDED FROM SUBMITTAL. SHOP DRAWING WILL BE REJECTED IF NOT PREPARED TO THE STANDARDS STATED ABOVE.

5. LOCATE SPLICES IN AREAS OF MINIMUM STRESS. LAP SPLICE LENGTHS ARE AS INDICATED ON THE DRAWINGS. FOR LAP SPLICING REQUIREMENTS REFER TO SHEET S1.0.

6. MINIMUM CLEARANCES BETWEEN PARALLEL REINFORCING STEEL, INCLUDING SPLICED BARS SHALL BE ONE INCH, ONE BAR DIAMETER, OR 4/3 TIMES THE MAXIMUM SIZE AGGREGATE, WHICH IS GREATER.

7. REINFORCING STEEL BENDS SHALL BE MADE COLD. RE–BENDING OF PREVIOUSLY BENT REINFORCING IS NOT PERMITTED.

8. ALL REINFORCING STEEL SHALL BE SECURELY HELD IN PLACE WHILE PLACING CONCRETE. IF REQUIRED, ADDITIONAL BARS OR STIRRUPS SHALL BE PROVIDED BY THE CONTRACTOR TO FURNISH SUPPORT FOR ALL REINFORCING.

9. ALL REINFORCING STEEL SHALL BE MARKED SO THEIR IDENTIFICATION CAN BE MADE WHEN FINAL INSPECTION IS CONDUCTED.

5000 STRUCTURAL STEEL

1. STRUCTURAL STEEL SHALL BE FABRICATED AND ERECTED IN ACCORDANCE WITH THE LATEST EDITION OF ANSI/AISC 360 "SPECIFICATION FOR STRUCTURAL STEEL BUILDINGS" AND THE LATEST EDITION OF ANSI/AISC 341 "SEISMIC PROVISIONS FOR STRUCTURAL STEEL BUILDINGS".

2. SEISMIC LOAD RESISTING SYSTEM (SLRS) IS DEFINED AS THE ASSEMBLY OF STRUCTURAL ELEMENTS IN THE BUILDING THAT RESISTS SEISMIC LOADS, INCLUDING COLUMNS, BEAMS, GIRDERS, STRUTS, COLLECTORS, CHORDS AND BRACES, AND THE CONNECTIONS BETWEEN THESE ELEMENTS, SPECIFICALLY DESIGNED TO RESIST SEISMIC FORCES, AS DESIGNATED ON THE

3. SUBMIT SHOP DRAWINGS TO CONTRACTING OFFICER FOR REVIEW. INDICATE AN ERECTION SEQUENCE OF WELDING TO MINIMIZE LOCKED–UP STRESSES OR DISTORTION FOR MOMENT–RESISTING STEEL FRAMES.

4. ALL STEEL NOT ENCASED IN CONCRETE, MASONRY, OR FIREPROOFING SHALL BE SHOP PRIMED AND PAINTED PER SPECIFICATIONS. ANY ABRASIONS OR UNPAINTED AREAS SHALL BE TOUCHED UP AFTER ERECTION.

5. ALL STRUCTURAL STEEL AND MISCELLANEOUS METALS EXPOSED TO WEATHER SHALL BE HOT DIPPED GALVANIZED AFTER FABRICATION UNLESS NOTED OTHERWISE ON ARCHITECTURAL DRAWINGS.

6. WELDING SHALL CONFORM TO LATEST EDITION OF ANSI/AWS D1.1
   - 6.1. WELDING SHALL UTILIZE E70 ELECTRODES IAW D1.1.
   - 6.2. WELDERS SHALL BE CERTIFIED TO CONFORM WITH AWS STANDARDS AND APPROVED BY THE GOVERNING CODE AUTHORITY.
   - 6.3. MINIMUM FILLET WELD SIZE SHALL CONFORM TO ASIC SPECIFICATION TABLE J2.4. WELD LENGTHS NOTED ON DRAWINGS ARE THE NET EFFECTIVE LENGTHS REQUIRED.
   - 6.4. FIELD WELD SYMBOLS NOTED ON THE DRAWINGS SHOW ENGINEERING INTENT, BUT NO ATTEMPT HAS BEEN MADE TO CLASSIFY ALL WELDS. AT FABRICATOR'S OPTION, ANY WELD INDICATED AS A FIELD WELD MAY BE SHOP WELDED AND ANY WELD INDICATES AS SHOP WELD MAY BE FIELD WELDED.

7. WELDS SHALL BE PREQUALIFIED PER AWS D1.1. NON–PREQUALIFIED WELDED JOINTS SHALL BE QUALIFIED BY TEST PER AWS D1.1.

8. WELDS SHALL BE PREQUALIFIED PER AWS D1.1. NON–PREQUALIFIED WELDED JOINTS SHALL BE QUALIFIED BY TEST PER AWS D1.1.

9. SUBMIT TO CONTRACTING OFFICER FOR REVIEW A WRITTEN WELDING PROCEDURE SPECIFICATION (WPS) FOR ALL WELDS USED ON PROJECT PRIOR TO FABRICATION. FOR WELDS NOT PREQUALIFIED, THE SUPPORTING PROCEDURE QUALIFICATION RECORD (PQR) SHALL ALSO BE SUBMITTED WITH THE WPS. WPS SHALL BE IN ACCORDANCE TO AWS D1.1, SECTION 4.6 AND SHALL INCLUDE THE FOLLOWING INFORMATION FOR EACH WELD TYPE AND POSITION.
   - 9.1. SKETCH OF JOINT DESCRIBING GEOMETRY AND APPLICABLE DIMENSIONS, WELD TYPE AND SIZE, SEQUENCE OF WELD DEPOSITION, AND MAXIMUM LAYER THICKNESS AND BEAD WIDTHS. LAYER THICKNESS SHALL NOT EXCEED ¼ INCH, AND BEAD WIDTH SHALL NOT EXCEED 5/8 INCH.
   - 9.2. BASE METAL TYPES AND THICKNESS.
   - 9.3. APPLICABLE WELD PROCESS
   - 9.4. FILLER METAL PER AWS STANDARD AND ELECTRODE SPECIFICATION AND CALISSFICATION, AS WELL AS DETAILS OF SHIELD MATERIAL.
   - 9.5. ELECTRICAL CHARACTERSTICS FOR WELD PROCESS USED SUCH AS TYPE OF CURRENT AND ACCEPTABLE RANGE OF CURRENT MEASURED IN AMPERAGE, VOLTAGE RANGE, AND ELECTODE DIAMETER. FOR WELD FEED PROCESS, INDICATE MANUFACTURER RECOMMENDED WIRE SPEED, CONTACT DISTANCE, MELT OFF RATE AND DEPOSITION RATE.
   - 9.6. A COPY OF ELECTRODE MANUFACTURER'S TECHNICAL INFORMATION AND CERTIFICATE OF CONFORMANCE.

10. TESTING LABORATORY WILL VERIFY COMPLIANCE WITH ACCEPTED WPS AND WILL PROMTLY NOTIFY CONTRACTING OFFICER IF DEVIATIONS ARE FOUND.

11. ELECTRODE DIAMETER SHALL NOT EXCEED PREQUALIFIED LIMITS SHOWN IN AWS D1.1 TABLE 3.7, AS APPLICABLE. FOR FCAW PROCESS, MAXIMUM ELECTRODE SIZE SHALL NOT EXCEED 1/8 INCH.

12. HYDROGEN LEVEL FOR ELECTRODES USED IN SLRS WELDED JOINTS SHALL MEET THE REQUIREMENTS FOR H16 AS SPECIFIED IN ANSI/AISC 341, APPENDIX 2, SECTION W5.2. ELECTRODES FOR ALL OTHER WELDS SHALL BE LOW HYDROGEN TYPE.

13. DETAILS, MATERIALS, WORKMANSIP, AND TESTING AND INSPECTION REQUIREMENTS OF WELDED JOINTS COMPRISING THE SLRS SHALL CONFORM TO THE FOLLOWING APPLICABLE STANDARDS.
   - 13.1. AWS D1.1 "STRUCTURAL WELDING CODE–STEEL"
   - 13.2. AWS D1.8 "STRUCTURLA WELDING CODE–SEISMIC SUPPLEMENT".
   - 13.3. ANSI/AISC 41 "SEISMIC PROVISIONS FOR STRUCTURAL STEEL BUILDINGS". APPENIDIX Q (QUALITY ASSURANCE PLAN) AND APPENDIX W (WELDING PROVISIONS)
   - 13.4. ANSI/AISC 358 "PREQUALIFIED CONNECTIONS FOR SPECIAL AND INTERMEDIATE STEEL MOMENT RESISTING FRAMES FOR SEISMIC APPLICATIONS."

14. WELD MATERIALS USED IN SLRS WELDED CONNECTIONS SHALL CONFORM TO THE FOLLOWING TOUGHNESS REQUIREMENTS:
   - 14.1. WELDED CONNECTIONS SHALL BE MADE WITH A FILLER METAL THAT CAN PRODUCE WELDS THAT HAVE A MINIMUM CHARPY V–NOTCH TOUGHNESS OF 20 FT–LB AT 0°F AS DETERMINED BY THE APPROPRIATE AWS CLASSIFICATION TEST METHOD.
   - 14.2. WELDED CONNECTIONS DESIGNATED AS "DEMAND CRITICAL", SHALL BE MADE WITH A FILLER METAL CAPABLE OF PROVIDING A MINIMUM CHARPY V–NOTCH TOUGHNESS OF 20 FT–LB AT –20°F AS DETERMINED BY THE APPROPRIATE AWS CLASSIFICATION TEST METHOD, AND 40 FT–LB AT 70°F AS DETERMINED BY APPENDIX X OF ANSI/AISC 341.

15. WELDING OF SHEET METAL AND METAL STUDS SHALL BE IN ACCORDANCE WITH AWS D1.3.

REGISTERED PROFESSIONAL ENGINEER
DAVID BARTON BROOKE
NO. 72417
100% DRAFT
CIVIL
STATE OF CALIFORNIA

DESIGNED: D. BROOKE CADD: M. GARCIA TECH. REVIEW: J. BLOM DATE: 04/07/2022	SUB SHEET NO. S1.1	TITLE OF SHEET STRUCTURAL NOTES 2 REHABILITATE ASH AND BUCKEYE WASTEWATER TREATMENT PLANTS SEQUOIA & KINGS CANYON NATIONAL PARKS	DRAWING NO. 102 / 177,507 PMIS/PKG NO. 317446 SHEET 68 OF 135

25/04/2022 15:40 MARIO GARCIA G:\CLIENTS\NPS\SEK(\317446\DRAWINGS\ASH MOUNTAIN DWGS\10_STRUCTURAL SHEETS AMWWTP\67-70 – STRUCTURAL NOTES.DWG

6000 WOOD

6050 PRESERVATIVE TREATED WOOD PRODUCTS

1. PRESERVATIVE TREATED WOOD SHALL BE REQUIRED FOR:

1.1. ALL WOOD THAT FORMS THE STRUCTURAL SUPPORT OF THE BUILDING, BALCONIES PORCHES, OR SIMILAR PERMANENT BUILDING APPURTENANCES THAT ARE EXPOSED TO THE WEATHER WITHOUT ADEQUATE PROTECTION FROM A ROOF, EAVE, OVERHANG, OR OTHER COVERING TO PREVENT MOISTURE OR WATER ACCUMULATION AT THE SURFACE OR AT JOINTS BETWEEN MEMBERS.

1.2. ALL WOOD INSTALLED ABOVE GROUND AND RESTING ON AN EXTERIOR CONCRETE FOUNDATION WALL LESS THAN 8 INCHES FROM EXPOSED EARTH.

1.3. POSTS OR COLUMNS SUPPORTING PERMANENT STRUCTURES AND SUPPORTED BY A CONCRETE SLAB OR FOOTING THAT IS IN DIRECT CONTACT WITH THE EARTH EXCEPT:

1.3.1. IF LOCATED IN BASEMENTS ON A CONCRETE PIER OR METAL PEDESTAL 1 INCH ABOVE THE SLAB AND SEPARATED THEREFROM BY AN IMPERVIOUS MOISTURE BARRIER.

1.3.2. IF IN AN ENCLOSED CRAWL SPACE OR AN UNEXCAVATED AREA WITHIN THE BUILDING PERIPHERY AND SUPPORTED BY A CONCRETE PIER OR PEDESTAL MORE THAN 8 INCHES FROM EXPOSED GROUND AND SEPARATED THEREFROM BY AN IMPERVIOUS MOISTURE BARRIER.

1.3.3. SLEEPERS AND SILLS ON A CONCRETE SLAB ON GRADE THAT DOES NOT HAVE AN IMPERVIOUS MOISTURE BARRIER SEPARATION WITH EXPOSED EARTH.

1.3.4. LEDGERS AND FURRING ATTACHED DIRECTLY TO THE INTERIOR OF EXTERIOR CONCRETE WALLS BELOW GRADE.

2. PRESERVATIVE TREATMENT SHALL BE PER AMERICAN WOOD PRESERVERS ASSOCIATION (AWPA) SPECIFICATION C2 AND C9 OR APPLICABLE STANDARDS.

3. WOOD TRUSSES SHALL UTILIZE APPROVED CONNECTOR PLATES (GANGNAIL OR EQUAL). SUBMIT SHOP DRAWINGS AND DESIGN CALCULATIONS TO THE A/E FOR REVIEW. SUBMITTED DOCUMENTS SHALL BE SIGNED AND STAMPED BY A PROFESSIONAL ENGINEER REGISTERED IN THE STATE OF CALIFORNIA. PROVIDE ALL CONNECTION DETAILS AND REQUIRED CONNECTION MATERIALS. PROVIDE FOR ALL TEMPORARY AND PERMANENT TRUSS BRACING AND BRIDGING.

4. ALL FASTENERS (NAILS, BOLTS, ANCHOR BOLTS, PLATES, HANGERS, ETC) IN CONTACT WITH TREATED LUMBER SHALL BE CORROSION RESISTANT AS FOLLOWS:

ENVIRONMENT	SBX/DOT /ZINC BORATE	MCQ	ACQ-C, ACQ-D, CA-3, CBA-A	ACZA
INTERIOR PLATES	G90	G90	HDG	SS
EXTERIOR PLATES	NA	HDG	SS	SS
EXTERIOR EXPOSED LUMBER	NA	HDG	SS	SS

WHERE:

1. G90= ZINC GALVANIZED FINISH CONTAINING 0.90 OZ OF ZINC PER SQ. FT. ALL SIDES.

2. HDG= HOT-DIP GALVANIZED AFTER FABRICATION WITH MIN. COATING OF 2.0 OZ OF ZINC PER SQ. FT. ALL SIDES.

3. SS= STAINLESS STEEL OF TYPE 303, 304, 305, OR 316.

6100 ROUGH FRAMING

1. SAWN LUMBER SHALL CONFORM TO WEST COAST LUMBER INSPECTION BUREAU (WCLIB) "GRADING AND DRESSING RULES" NO. 17 LATEST EDITION. SAWN LUMBER SHALL BE S4S AND SURFACE DRIED, 19 PERCENT MAXIMUM MOISTURE CONTENT. PROTECT LUMBER FROM WEATHER AND PROVIDE FURTHER DRYING OF ASSEMBLED FRAMING TO MINIMIZE WOOD SHRINKAGE POTENTIAL. ALL LUMBER EXPOSED TO WEATHER OR IN CONTACT WITH CONCRETE OR MASONRY SHALL BE PRESERVATIVE TREATED UNLESS NOTED OTHERWISE PER PLAN. LUMBER SPECIES, GRADE, AND PROPERTIES SHALL BE AS FOLLOWS UNLESS NOTED OTHERWISE PER PLAN SCHEDULE:

DOUGLAS-FIR-LARCH NO. 2 OR BETTER

6101 FRAMING NOTES

1. FRAMING CONNECTORS, ACCESSORIES, AND FASTENERS AS NOTED IN THE PLANS AND DETAILS SHALL BE AS MANUFACTURED BY SIMPSON STRONG-TIE. EQUIVALENT HARDWARE MAY BE USED WITH PRIOR APPROVAL BY THE ENGINEER OF RECORD. INSTALL ALL HARDWARE PER MANUFACTURER'S SPECIFICATIONS. WHERE STRAPS CONNECT TWO MEMBERS TOGETHER, PLACE HALF OF THE REQUIRED FASTENERS INTO EACH MEMBER. PROVIDE SOLID BLOCKING AT ALL BEARING POINTS. SEE SECTION 6050 FOR FASTENER REQUIREMENTS AT TREATED LUMBER. TYPICAL NAILING NOT SHOWN PER PLAN, DETAIL, OR SCHEDULE SHALL CONFORM TO FASTENING REQUIREMENTS PER IBC SECTION 2304.10. NAILS SHALL BE COMMON UNLESS NOTED OTHERWISE.

2. UNLESS NOTED OTHERWISE PER SHEAR WALL SCHEDULE OR PLANS, ANCHOR BOLTS AT SILL PLATES SHALL BE 5/8 INCH DIAMETER WITH 7 INCHES MINIMUM EMBEDMENT INTO CONCRETE AND SHALL BE SPACED NOT MORE THAN 3 FEET APART. THE BOLTS SHALL BE LOCATED IN THE MIDDLE THIRD OF THE WIDTH OF THE PLATE. THERE SHALL BE A MINIMUM OF TWO BOLTS PER SILL PIECE WITH ONE BOLT LOCATED NOT MORE THAN 12 INCHES NOR LESS THAN 4 INCHES FROM EACH END OF THE PIECE. A 3"X3"X1/4" PLATE WASHER SHALL BE PROVIDED FOR ALL ANCHOR BOLTS BETWEEN THE FOUNDATION SILL PLATE AND THE NUT (COUNTERSUNK PLATE WASHERS SHALL NOT BE ALLOWED). THE HOLE IN THE PLATE WASHER IS PERMITTED TO BE DIAGONALLY SLOTTED WITH A WIDTH OF UP TO 3/16 INCH (4.76 MM) LARGER THAN THE BOLT DIAMETER AND A SLOT LENGTH NOT TO EXCEED 13/4 INCHES (44 MM), PROVIDED THAT A STANDARD CUT WASHER IS PLACED BETWEEN THE PLATE WASHER AND THE NUT.

3. CHORD OF TWO STUDS (2X6) SHALL BE AT THE BOUNDARIES OF EACH FULL HEIGHT WALL SEGMENT.

4. WALL FRAMING- CORNERS PER 2308.5.2. NO LESS THAN THREE STUDS SHALL BE INSTALLED AT EACH CORNER OF THE WALL.

5. WALL FRAMING- STUD BRIDGING/BLOCKING PER 2308.5.7. USE THE SAME WALL STUD SIZE AS BLOCKING AT THE MID-HEIGHT OF THE STUDS

6. WALL FRAMING-PIPES IN-WALL PER 2308.5.8. WHERE PLUMBING, HEATING, OR OTHER PIPES ARE PLACED IN, OR PARTLY IN, A PARTITION, NECESSITATING THE CUTTING OF THE SOLES OR PLATES, A METAL TIE NOT LESS THAN 0.058 INCHES (1.47 MM) (16 GALVANIZED GAGE) AND 11/2 INCHES (38 MM) IN WIDTH SHALL BE FASTENED TO EACH PLATE ACROSS AND TO EACH SIDE OF THE OPENING WITH NOT LESS THAN SIX 16D NAILS.

7. WALL FRAMING-CUTTING A NOTCHING PER 2308.5.9. IN EXTERIOR WALLS AND BEARING PARTITIONS, A WOOD STUD SHALL NOT BE CUT OR NOTCHED IN EXCESS OF 25 PERCENT OF ITS DEPTH. IN NONBEARING PARTITIONS THAT DO NOT SUPPORT LOADS OTHER THAN THE WEIGHT OF THE PARTITION, A STUD SHALL NOT BE CUT OR NOTCHED IN EXCESS OF 40 PERCENT OF ITS DEPTH.

8. WALL FRAMING-BORED HOLES PER 2308.5.10. THE DIAMETER OF BORED HOLES IN WOOD STUDS SHALL NOT EXCEED 40 PERCENT OF THE STUD DEPTH. THE DIAMETER OF BORED HOLES IN WOOD STUDS SHALL NOT EXCEED 60 PERCENT OF THE STUD DEPTH IN NONBEARING PARTITIONS. THE DIAMETER OF BORED HOLES IN WOOD STUDS SHALL NOT EXCEED 60 PERCENT OF THE STUD DEPTH IN ANY WALL WHERE EACH STUD IS DOUBLED, PROVIDED THAT NOT MORE THAN TWO SUCH SUCCESSIVE DOUBLED STUDS ARE SO BORED. THE EDGE OF THE BORED HOLE SHALL NOT BE CLOSER THAN 5/8 INCH (15.9 MM) TO THE EDGE OF THE STUD. BORED HOLES SHALL NOT BE LOCATED AT THE SAME SECTION OF STUD AS A CUT OR NOTCH.

6103 SHRINKAGE OF WOOD FRAMING

1. SHRINKAGE IN WOOD FRAMING IS DUE TO LOSS OF MOISTURE CONTENT AND TO COMPRESSION OF ASSEMBLIES OF WOOD COMPONENTS. PLUMBING, ELECTRICAL, AND MECHANICAL SYSTEMS AS WELL AS EXTERIOR FINISHES SHALL BE DESIGNED AND BUILT TO ACCOMMODATE 1/4 INCH PER FLOOR WOOD SHRINKAGE. THE USE OF KILN DRIED LUMBER AND PROVIDING A DRYING PROCESS TO THE FRAMING MEMBERS PRIOR TO APPLICATION OF FINISHES WILL HELP CONTROL BUT WILL NOT ELIMINATE SHRINKAGE.

6160 WOOD SHEATHING

1. STRUCTURAL WOOD SHEATHING PANELS SHALL HAVE APA GRADE TRADEMARK OF THE AMERICAN PLYWOOD ASSOCIATION. WOOD SHEATHING PANELS SHALL BE EXPOSURE 1. PANELS SHALL HAVE THE FOLLOWING THICKNESS, SPAN RATING, AND FASTENING UNLESS NOTED OTHERWISE PER PLAN:

	EDGE NAILS	FIELD NAILS
ROOF: 19/32" 40/20 EXPOSURE 1	10d @ 6"	10d @ 12"

SHEARWALL: SEE SCHEDULE SHEET S5.0

2. ALL ROOF SHEATHING PANELS SHALL BE BLOCKED AND INSTALLED WITH LONG PANEL DIRECTION PERPENDICULAR TO SUPPORTS AND IN A STAGGERED PATTERN SUCH THAT CONTINUOUS PANEL JOINTS PERPENDICULAR TO FRAMING UNLESS NOTED OTHERWISE PER PLAN. BLOCKING AT INTERMEDIATE FLOOR AND ROOF SHEATHING JOINTS SHALL BE REQUIRED UNLESS NOTED OTHERWISE PER PLAN. PROVIDE BLOCKING BETWEEN ROOF FRAMING MEMBERS AT BEARING LOCATIONS AND AT DIAPHRAGM BOUNDARIES. SHEAR WALL SHEATHING SHALL BE BLOCKED AT ALL EDGES WITH 2X OR 3X FRAMING PER SHEAR WALL SCHEDULE.

61753 SHOP FABRICATED METAL PLATE CONNECTED WOOD TRUSSES

1. PREMANUFACTURED PLATED WOOD TRUSSES SHALL BE MANUFACTURER DESIGNED AND SHALL COMPLY WITH THE TRUSS PLATE INSTITUTE (ANSI/TPI 1-2014, NATIONAL DESIGN STANDARD FOR METAL PLATE CONNECTED WOOD TRUSS CONSTRUCTION) AND IBC SECTION 2303.4. SHOP DRAWINGS AND CALCULATIONS SHALL BE SUBMITTED. DESIGN FOR THE SPANS AND CONDITIONS SHOWN ON THE PLANS, LOADS PER SECTION 1003 AND THE FOLLOWING:

	ROOF
TOP CHORD LIVE LOAD	20 PSF
TOP CHORD DEAD LOAD	20 PSF
BOTTOM CHORD DEAD LOAD	15 PSF
HVAC AND MECHANICAL EQUIPMENT	SEE MECHANICAL
GROUND SNOW LOAD	5 PSF
WIND SPEED	106 MPH
LIVE LOAD DEFLECTION	L/360

REGISTERED PROFESSIONAL ENGINEER
DAVID BARTON BROOKE
NO. 72417
CIVIL
STATE OF CALIFORNIA
100% DRAFT

DESIGNED: D. BROOKE	SUB SHEET NO.	TITLE OF SHEET	DRAWING NO.
CADD M. GARCIA	S1.2	STRUCTURAL NOTES 3	102 / 177,507
TECH. REVIEW: J. BLOM		REHABILITATE ASH AND BUCKEYE WASTEWATER TREATMENT PLANTS SEQUOIA & KINGS CANYON NATIONAL PARKS	PMIS/PKG NO. 317446
DATE: 04/07/2022			SHEET 69 OF 135

25/04/2022 15:40 MARIO GARCIA G:\CLIENTS\NPS\SEKI\317446\DRAWINGS\ASH MOUNTAIN DWGS\10_STRUCTURAL SHEETS AMWWTP\67-70 - STRUCTURAL NOTES.DWG

STRUCTURAL TESTS AND SPECIAL INSPECTIONS

INSPECTION ITEMS	COMMENTS
SOILS AND FOUNDATIONS (IBC–21 SECTION 1705.6)	RE: STATEMENT OF STRUCTURAL TESTS AND SPECIAL INSPECTIONS DOCUMENT
CONCRETE CONSTRUCTION (IBC–21 SECTION 1705.3)	RE: STATEMENT OF STRUCTURAL TESTS AND SPECIAL INSPECTIONS DOCUMENT
STEEL CONSTRUCTION (IBC–21 SECTION 1705.2; AMERICAN INSTITUTE OF STEEL CONSTRUCTION: AISC 360–16 CHAPTER N, AISC 341–16 CHAPTER J)	RE: STATEMENT OF STRUCTURAL TESTS AND SPECIAL INSPECTIONS DOCUMENT
WOOD CONSTRUCTION (IBC–21 SECTION 1705.5)	RE: STATEMENT OF STRUCTURAL TESTS AND SPECIAL INSPECTIONS DOCUMENT
FABRICATED ITEMS (IBC–21 SECTION 1705.11)	RE: STATEMENT OF STRUCTURAL TESTS AND SPECIAL INSPECTIONS DOCUMENT
WIND RESISTANCE (IBC–21 SECTION 1705.12)	RE: STATEMENT OF STRUCTURAL TESTS AND SPECIAL INSPECTIONS DOCUMENT
SEISMIC RESISTANCE (IBC–21 SECTION 1705.13)	RE: STATEMENT OF STRUCTURAL TESTS AND SPECIAL INSPECTIONS DOCUMENT

STRUCTURAL TESTS AND SPECIAL INSPECTIONS SCHEDULE NOTES:

1. ITEMS SHALL BE INSPECTED IN ACCORDANCE WITH IBC 1704 BY A CERTIFIED SPECIAL INSPECTOR FROM AN AGENCY APPROVED BY THE JURISDICTION.
2. SPECIAL INSPECTION SHALL NOT BE REQUIRED FOR WORK IN AN APPROVED FABRICATOR'S PER IBC 1704.2.5. VERIFY APPROVAL WITH JURISDICTION PRIOR TO FABRICATION.
3. CONTINUOUS SPECIAL INSPECTION REQUIRES THE INSPECTOR SHALL BE ONSITE AT ALL TIMES AND THAT WORK REQUIRING SPECIAL INSPECTION IS PERFORMED. PERIODIC SPECIAL INSPECTION SHALL ALLOW INSPECTION AT THE INTERVALS NECESSARY TO CONFORM THAT WORK REQUIRING SPECIAL INSPECTION IS IN COMPLIANCE WITH THE REQUIREMENTS.
4. THE SPECIAL INSPECTOR SHALL PROVIDE THE BUILDING OFFICIAL, OWNER, ARCHITECT, ENGINEER OF RECORD, AND CONTRACTOR WITH COPIES OF ALL REPORTS AND TEST RESULTS.

STRUCTURAL OBSERVATION SCHEDULE

INSPECTION ITEMS	COMMENTS
STRUCTURAL OBSERVATION (IBC 1704.6)	NOTE 1
CONCRETE CONSTRUCTION	NOTE 2
STEEL CONSTRUCTION	
WOOD CONSTRUCTION	NOTE 3

STRUCTURAL OBSERVATION SCHEDULE NOTES:

1. STRUCTURAL OBSERVATION SHALL MEAN THE VISUAL OBSERVATION OF THE STRUCTURAL SYSTEM BY A PROFESSIONAL ENGINEER LICENSED IN THE STATE OF CALIFORNIA FOR THE GENERAL CONFORMANCE TO THE APPROVED PLANS AND SPECIFICATIONS AT SIGNIFICANT CONSTRUCTION STAGES AND AT COMPLETION OF THE STRUCTURAL FRAMING SYSTEM PRIOR TO COVER. THE CONTRACTOR SHALL PROVIDE AT LEAST TWO WORKING DAYS NOTICE TO THE ENGINEER PRIOR TO REQUIREMENTS FOR BUILDING INSPECTION BY THE JURISDICTION NOR REQUIREMENTS FOR SPECIAL INSPECTIONS.
2. STRUCTURAL OBSERVATION FOR CONCRETE CONSTRUCTION SHALL CONSIST OF OBSERVATION AT OR NEAR THE COMPLETION OF FORMWORK AND REBAR PRIOR TO CONCRETE PLACEMENT.
3. STRUCTURAL OBSERVATION FOR WOOD CONSTRUCTION SHALL CONSIST OF OBSERVATION AT OR NEAR THE COMPLETION OF THE WOOD WALL FOR ANCHOR BOLT AND HOLDOWN INSTALLATION, SHEATHING AND STRAPPING NAILING. AND AT OR NEAR COMPLETION OF THE ROOF FRAMING PRIOR TO PLACEMENT OF THE ROOFING.

REGISTERED PROFESSIONAL ENGINEER
DAVID BARTON BROOKE
NO. 72417
100% DRAFT
CIVIL
STATE OF CALIFORNIA

DESIGNED: D. BROOKE CADD M. GARCIA TECH. REVIEW: J. BLOM DATE: 04/07/2022	SUB SHEET NO. S1.3	TITLE OF SHEET STRUCTURAL NOTES 4 REHABILITATE ASH AND BUCKEYE WASTEWATER TREATMENT PLANTS SEQUOIA & KINGS CANYON NATIONAL PARKS	DRAWING NO. 102 / 177,507 PMIS/PKG NO. 317446 SHEET 70 OF 135

25/04/2022 15:40 MARIO GARCIA G:\CLIENTS\NPS\SEK(\317446\DRAWINGS\ASH MOUNTAIN DWGS\10_STRUCTURAL SHEETS AMWWTP\67-70 - STRUCTURAL NOTES.DWG

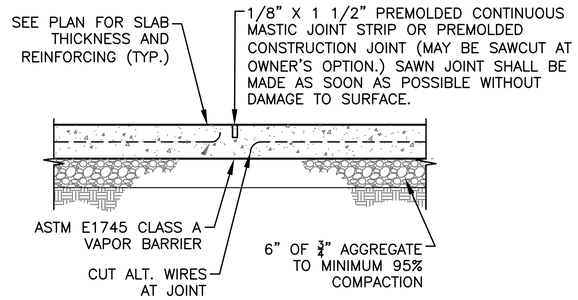

NOTE: PROVIDE CONTROL OR CONSTRUCTION JOINTS IN SLABS ON GRADE TO BREAK UP SLAB INTO RECTANGULAR AREAS OF 400 SQ. FT. OR LESS. AREAS SHALL BE APPROX. SQUARE AND HAVE NO ACUTE ANGLES. JOINT LOCATIONS SHALL BE APPROVED BY THE ARCHITECT.

1 / S1.4 TYPICAL SHRINKAGE CONTROL JOINT (S.J.)

NTS

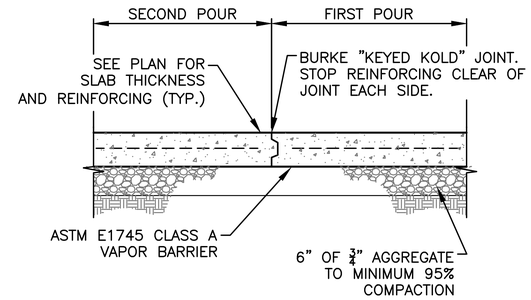

NOTE: PROVIDE CONTROL OR CONSTRUCTION JOINTS IN SLABS ON GRADE TO BREAK UP SLAB INTO RECTANGULAR AREAS OF 400 SQ. FT. OR LESS. AREAS SHALL BE APPROX. SQUARE AND HAVE NO ACUTE ANGLES. JOINT LOCATIONS SHALL BE APPROVED BY THE ARCHITECT.

2 / S1.4 TYPICAL CONSRUCTION JOINT (C.J.)

NTS

CONCRETE STRENGTH f'c (PSI)							
BAR SIZE	4500						
	Ld (INCHES)	Ldt (INCHES)	Ldc (INCHES)	LbA (INCHES)	LbB (INCHES)	Lbc (INCHES)	Ldh (INCHES)
#3x	14	18	8	18	23	12	7
#4x	18	24	9	24	31	15	9
#5x	23	30	12	30	38	19	12
#6x	27	35	14	35	46	23	14
#7x	40	51	16	51	67	27	16
#8x	45	59	18	59	76	30	18
#9x	51	66	21	66	86	34	21
#10x	56	73	23	73	95	38	23
#11x	62	80	25	80	104	41	25

LEGEND

db = BAR DIAMETER
Ld = BOTTOM BAR DEVELOPMENT LENGTH
Ldt = TOP BAR DEVELOPMENT LENGTH
Ldc = COMPRESSION BAR DEVELOPMENT LENGTH
LbA = BAR LAP SPLICE LENGTH–CLASS A
LbB = BAR LAP SPLICE LENGTH–CLASS B
Lbc = COMPRESSION BAR LAP SPLICE LENGTH
Ldh = HOOKED BAR DEVELOPMENT LENGTH

NOTES:
1. A TOP BAR IS A HORIZONTAL BAR WITH MORE THAN 12" OF FRESH CONCRETE CAST BELOW IT.
2. FOR BEAMS AND COLUMNS WHERE CLEAR COVER IS LESS THAN db OR CLEAR SPACING IS LESS THAN db, MULTIPLY VALUES IN TABLE BY 1.5.
3. FOR WALLS AND SLABS WHERE CLEAR COVER IS LESS THAN db OR CLEAR SPACING IS LESS THAN 2db, MULTIPLY VALUES IN TABLE BY 1.5.
4. FOR SPLICING OF DIFFERENT REINFORCEMENT SIZES, USE VALUES FOR SMALLER REINFORCEMENT.
5. FOR #14x AND #18x BAR USE MECHANICAL COUPLERS.
6. MECHANICAL COUPLERS MAY BE USED IN LIEU OF LAP SPLICES, AT CONTRACTORS OPTION.
7. CONTRACTOR TO ASSUME LAP SPLICE LENGTH CLASS B UNLESS SHOP DRAWINGS, IN ACCORDANCE WITH SPECIFICATIONS, SHOW THAT THE REQUIREMENTS FOR CLASS A CAN BE MET.

3 / S1.4 TYPICAL DEVELOPMENT LENGTH AND LAP SPLICE SHEDULE

NTS

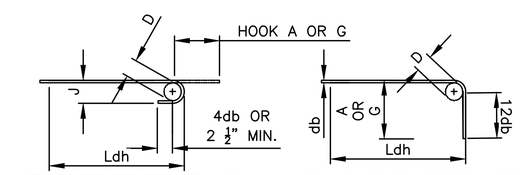

STANDARD HOOK DETAILS							
BAR SIZE	D	STANDARD 180 DEGREE HOOK			STANDARD 90 DEGREE HOOK		
		D	A OR G	J	BAR SIZE	D	A OR G
#3	6db	2 1/4"	5.5"	3"	#3	2 ¼"	6"
#4	6db	3"	6.5"	4"	#4	3"	8"
#5	6db	3 ¾"	7.5"	5"	#5	3 ¾"	10"
#6	6db	4 ½"	9"	6"	#6	4 ½"	1'–0"

4 / S1.4 STANDARD HOOK DETAILS

NTS

REGISTERED PROFESSIONAL ENGINEER
DAVID BARTON BROOKE
NO. 70417
100% DRAFT
CIVIL
STATE OF CALIFORNIA

DESIGNED: D. BROOKE	SUB SHEET NO.	TITLE OF SHEET	DRAWING NO.
DRAWN: M. GARCIA	S1.4	STANDARD DETAILS	102 / 177,507
TECH. REVIEW: J. BLOM		REHABILITATE ASH AND BUCKEYE WASTEWATER TREATMENT PLANTS SEQUOIA & KINGS CANYON NATIONAL PARKS	PMIS/PKG NO. 317446
DATE: 04/07/2022			SHEET 71 OF 135

25/04/2022 15:40 MARIO GARCIA G:\CLIENTS\NPS\SEKI\317446\DRAWINGS\ASH MOUNTAIN DWGS\10_STRUCTURAL SHEETS AMWWTP\71 – STANDARD DETAILS.DWG

FASTENING SCHEDULE (IBC TABLE 2301.10.2)

DESCRIPTION OF BUILDING ELEMENT	NUMBER AND TYPE OF FASTENER	SPACING AND LOCATION
ROOF		
1. BLOCKING BETWEEN CEILING JOISTS, RAFTERS OR TRUSSES TO TOP PLATE OR OTHER FRAMING BELOW	4–8D BOX (21/2" × 0.113"); OR 3–8D COMMON (21/2" × 0.131"); OR 3–10D BOX (3" × 0.128"); OR 3–3" × 0.131" NAILS; OR 3–3"14 GAGE STAPLES, 7/16" CROWN	EACH END, TOENAIL
BLOCKING BETWEEN RAFTERS OR TRUSS NOT AT THE WALL TOP PLATE, TO RAFTER OR TRUSS	2–8D COMMON (21/2" × 0.131") 2–3" × 0.131" NAILS 2–3" 14 GAGE STAPLES	EACH END, TOENAIL
	2–16 D COMMON (31/2" × 0.162") 3–3" × 0.131" NAILS 3–3" 14 GAGE STAPLES	END NAIL
FLAT BLOCKING TO TRUSS AND WEB FILLER	16D COMMON (31/2" × 0.162") @ 6" O.C. 3" × 0.131" NAILS @ 6" O.C. 3" × 14 GAGE STAPLES @ 6" O.C	FACE NAIL
2. CEILING JOISTS TO TOP PLATE	4–8D BOX (21/2" × 0.113"); OR 3–8D COMMON (21/2" × 0.131"); OR 3–10D BOX (3" × 0.128"); OR 3–3" × 0.131" NAILS; OR 3–3" 14 GAGE STAPLES, 7/16" CROWN	EACH JOIST, TOENAIL
3. CEILING JOIST NOT ATTACHED TO PARALLEL RAFTER, LAPS OVER PARTITIONS (NO THRUST) (SEE SECTION 2308.7.3.1, TABLE 2308.7.3.1)	3–16D COMMON (31/2" × 0.162"); OR 4–10D BOX (3" × 0.128"); OR 4–3" × 0.131" NAILS; OR 4–3" 14 GAGE STAPLES, 7/16" CROWN	FACE NAIL
4. CEILING JOIST ATTACHED TO PARALLEL RAFTER (HEEL JOINT) (SEE SECTION 2308.7.3.1, TABLE 2308.7.3.1)	PER TABLE 2308.7.3.1	FACE NAIL
5. COLLAR TIE TO RAFTER	3–10D COMMON (3" × 0.148"); OR 4–10D BOX (3" × 0.128"); OR 4–3" × 0.131" NAILS; OR 4–3" 14 GAGE STAPLES, 7/16" CROWN	FACE NAIL
6. RAFTER OR ROOF TRUSS TO TOP PLATE (SEE SECTION 2308.7.5, TABLE 2308.7.5)	3–10 COMMON (3" × 0.148"); OR 3–16D BOX (31/2" × 0.135"); OR 4–10D BOX (3" × 0.128"); OR 4–3" × 0.131 NAILS; OR 4–3" 14 GAGE STAPLES, 7/16" CROWN	2 TOENAILS ON ONE SIDE AND 1 TOENAIL ON OPPOSITE SIDE OF RAFTER OR TRUSS
7. ROOF RAFTERS TO RIDGE VALLEY OR HIP RAFTERS; OR ROOF RAFTER TO 2–INCH RIDGE BEAM	2–16D COMMON (31/2" × 0.162"); OR 3–16D BOX (31/2" × 0.135"); OR 3–10D BOX (3" × 0.128"); OR 3–3" × 0.131" NAILS; OR 3–3" 14 GAGE STAPLES, 7/16" CROWN	END NAIL
	3–10D COMMON (31/2" × 0.148"); OR 4–16D BOX (31/2" × 0.135"); OR 4–10D BOX (3" × 0.128"); OR 4–3" × 0.131" NAILS; OR 4–3" 14 GAGE STAPLES, 7/16" CROWN	TOENAIL
WALL		
8. STUD TO STUD (NOT AT BRACED WALL PANELS)	16D COMMON (31/2" × 0.162");	24" O.C. FACE NAIL
	10D BOX (3" × 0.128"); OR 3" × 0.131" NAILS; OR 3–3" 14 GAGE STAPLES, 7/16" CROWN	16" O.C. FACE NAIL
9. STUD TO STUD AND ABUTTING STUDS AT INTERSECTING WALL CORNERS (AT BRACED WALL PANELS)	16D COMMON (31/2" × 0.162")	16" O.C. FACE NAIL
	16D BOX (31/2" × 0.135"); OR 3" × 0.131" NAILS; OR 3–3" 14 GAGE STAPLES, 7/16" CROWN	12" O.C. FACE NAIL
10. BUILT–UP HEADER (2" TO 2" HEADER)	16D COMMON (31/2" × 0.162")	16" O.C. EACH EDGE, FACE NAIL
	16D BOX (31/2" × 0.135")	12" O.C. EACH EDGE, FACE NAIL
11. CONTINUOUS HEADER TO STUD	4–8D COMMON (21/2" × 0.131"); OR 4–10D BOX (3" × 0.128"); OR 5–8D BOX (21/2" × 0.113")	TOENAIL
12. TOP PLATE TO TOP PLATE	16D COMMON (31/2" × 0.162")	16" O.C. FACE NAIL
	10D BOX (3" × 0.128"); OR 3" × 0.131" NAILS; OR 3" 14 GAGE STAPLES, 7/16" CROWN	12" O.C. FACE NAIL
13. TOP PLATE TO TOP PLATE, AT END JOINTS	8–16D COMMON (31/2" × 0.162"); OR 12–16D BOX (31/2" × 0.135"); OR 12–10D BOX (3" × 0.128"); OR 12–3" × 0.131" NAILS; OR 12–3" 14 GAGE STAPLES, 7/16" CROWN	EACH SIDE OF END JOINT, FACE NAIL (MINIMUM 24" LAP SPLICE LENGTH EACH SIDE OF END JOINT)
14. BOTTOM PLATE TO JOIST, RIM JOIST, BAND JOIST OR BLOCKING (NOT AT BRACED WALL PANELS)	16D COMMON (31/2" × 0.162")	16" O.C. FACE NAIL
	16D BOX (31/2" × 0.135"); OR 3" × 0.131" NAILS; OR 3" 14 GAGE STAPLES, 7/16" CROWN	12" O.C. FACE NAIL
15. BOTTOM PLATE TO JOIST, RIM JOIST, BAND JOIST OR BLOCKING AT BRACED WALL PANELS	2–16D COMMON (31/2" × 0.162"); OR 3–16D BOX (31/2" × 0.135"); OR 4–3" × 0.131" NAILS; OR 4–3" 14 GAGE STAPLES, 7/16" CROWN	16" O.C. FACE NAIL
16. STUD TO TOP OR BOTTOM PLATE	3–16D BOX (31/2" × 0.135"); OR 4–8D COMMON (21/2" × 0.131"); OR 4–10D BOX (3" × 0.128"); OR 4–3" × 0.131" NAILS; OR 4–8D BOX (21/2" × 0.113"); OR 4–3" 14 GAGE STAPLES, 7/16" CROWN	TOENAIL
	2–16D COMMON (31/2" × 0.162"); OR 3–16D BOX (31/2" × 0.135"); OR 3–10D BOX (3" × 0.128"); OR 3–3" × 0.131" NAILS; OR 3–3" 14 GAGE STAPLES, 7/16" CROWN	END NAIL
17. TOP PLATES, LAPS AT CORNERS AND INTERSECTIONS	2–16D COMMON (31/2" × 0.162"); OR 3–10D BOX (3" × 0.128"); OR 3–3" × 0.131" NAILS; OR 3–3" 14 GAGE STAPLES, 7/16" CROWN	FACE NAIL
18. 1" BRACE TO EACH STUD AND PLATE	3–8D BOX (21/2" × 0.113"); OR 2–8D COMMON (21/2" × 0.131"); OR 2–10D BOX (3" × 0.128"); OR 2–3" × 0.131" NAILS; OR 2–3" 14 GAGE STAPLES, 7/16" CROWN	FACE NAIL
19. 1" × 6" SHEATHING TO EACH BEARING	3–8D BOX (21/2" × 0.113"); OR 2–8D COMMON (21/2" × 0.131"); OR 2–10D BOX (3" × 0.128"); OR 2–13/4" 16 GAGE STAPLES, 1" CROWN	FACE NAIL
20. 1" × 8" AND WIDER SHEATHING TO EACH BEARING	3–8D COMMON (21/2" × 0.131"); OR 3–8D BOX (21/2" X 0.113"); OR 3–10D BOX (3" × 0.128"); OR 3–13/4" 16 GAGE STAPLES, 1" CROWN	FACE NAIL
	WIDER THAN 1" × 8" 3–8D COMMON (21/2" × 0.131"); OR 4–8D BOX (21/2" × 0.113"); OR 3–10D BOX (3" × 0.128"); OR 4–13/4" 16 GAGE STAPLES, 1" CROWN	

REGISTERED PROFESSIONAL ENGINEER
DAVID BARTON BROOKE
NO. 72417
CIVIL
STATE OF CALIFORNIA
100% DRAFT

DESIGNED: D. BROOKE CADD M. GARCIA TECH. REVIEW: J. BLOM DATE: 04/07/2022	SUB SHEET NO. S1.5	TITLE OF SHEET STANDARD DETAILS 2 REHABILITATE ASH AND BUCKEYE WASTEWATER TREATMENT PLANTS SEQUOIA & KINGS CANYON NATIONAL PARKS	DRAWING NO. 102 / 177,507 PMIS/PKG NO. 317446 SHEET 72 OF 135

26/04/2022 14:27 MARIO GARCIA G:\CLIENTS\NPS\SEK\317446\DRAWINGS\ASH MOUNTAIN DWGS\10_STRUCTURAL SHEETS AMWWTP\72 – STANDARD DETAILS 2.DWG

FOOTING SCHEDULE

MARK	THICKNESS OF FOOTING	SIZE OF FOOTING	REINFORCING LONG.	REINFORCING TRANS.	DETAILS
F1	12"	30" X CONT.	3 #5 CONT.	#5 @ 12" O.C.	1/S1.9

SHEET NOTES:

1. CENTER INTERIOR FOOTINGS ON WALLS OR COLUMNS, TYPICAL, U.N.O.
2. VERIFY DIMENSIONS PRIOR TO CONSTRUCTION.
3. SEE ARCHITECTURAL SHEETS FOR WALL AND FLOOR DRAIN LOCATIONS.

KEYNOTES:

1. HOLDDOWN HDQ8 SIMPSON STRONG TIE OR EQUIVALENT

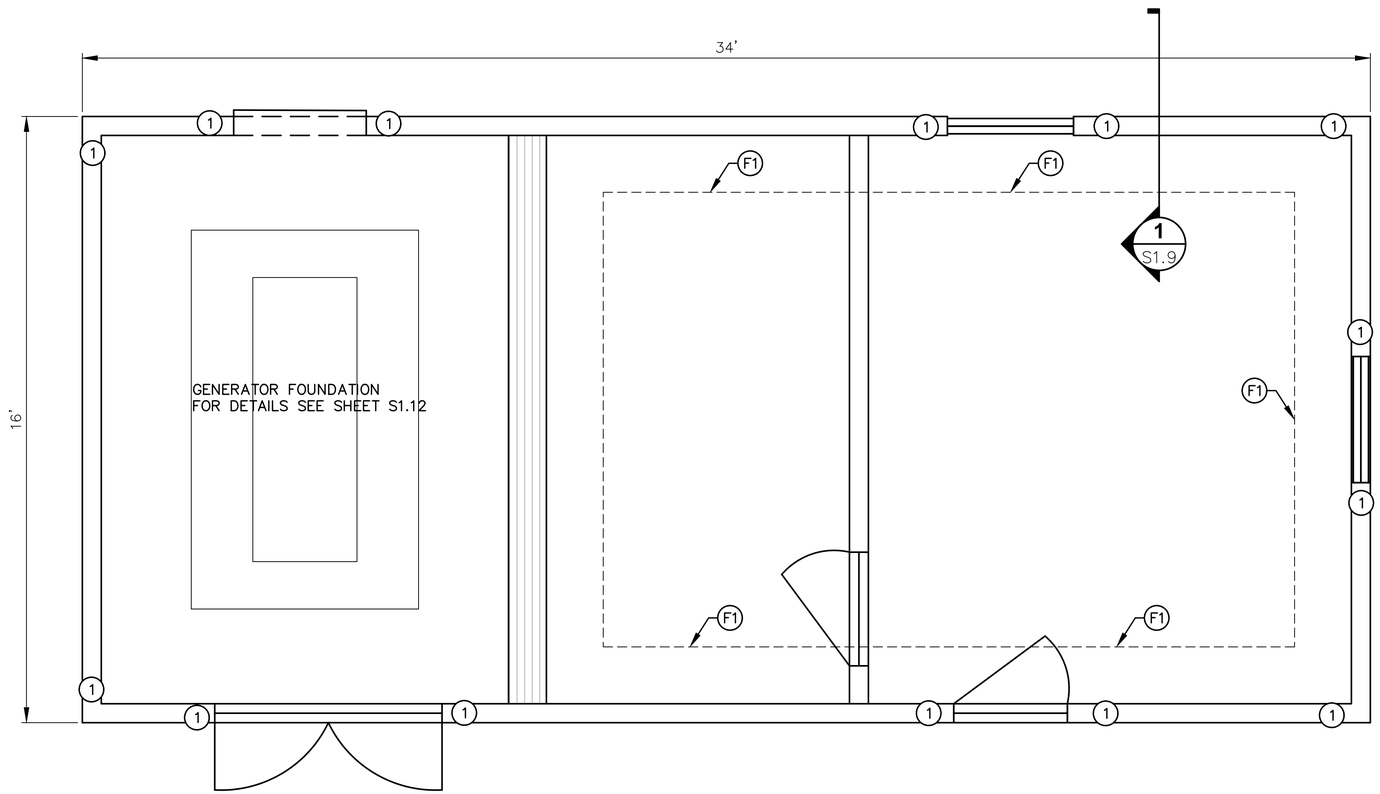

REGISTERED PROFESSIONAL ENGINEER
DAVID BARTON BROOKE
NO. 5417
CIVIL
STATE OF CALIFORNIA
100% DRAFT

DESIGNED: D. BROOKE	SUB SHEET NO.	TITLE OF SHEET	DRAWING NO.
CADD: M. GARCIA	S1.6	CONTROL BUILDING FOUNDATION PLAN	102 / 177,507
TECH. REVIEW: J. BLOM		REHABILITATE ASH AND BUCKEYE WASTEWATER TREATMENT PLANTS SEQUOIA & KINGS CANYON NATIONAL PARKS	PMIS/PKG NO. 317446
DATE: 04/07/2022			SHEET 73 OF 135

25/04/2022 15:40 MARIO GARCIA G:\CLIENTS\NPS\SEKI\317446\DRAWINGS\ASH MOUNTAIN DWGS\10_STRUCTURAL SHEETS AMWTP\73 - CONTROL BUILDING FOUNDATION PLAN.DWG

KEYNOTES:

(1) HOLDDOWN HDQ8 SIMPSON STRONG TIE OR EQUIVALENT

WALL SCHEDULE

MARK	TYPE	STUD	STUD SPACING	SHEAR WALL	SHEATHING	HOLDDOWN	TOP PLATE	BOTTOM PLATE	ANCHOR BOLT
W1	EXTERIOR BEARING WALL	2X6	16"	YES	19/32" WSP	HDQ8-SDS3	2(2X6)	1(2X6)	5/8" DIA. 7" EMBED, STEEL J ANCHOR BOLT @ 3' O.C.
W2	EXTERIOR BEARING WALL	2X6	16"	YES	19/32" WSP	HDQ8-SDS3	2(2X6)	1(2X6)	5/8" DIA. 7" EMBED, STEEL J ANCHOR BOLT @ 3' O.C.
W3	EXTERIOR BEARING WALL	2X6	16"	YES	19/32" WSP	HDQ8-SDS3	2(2X6)	1(2X6)	5/8" DIA. 7" EMBED, STEEL J ANCHOR BOLT @ 3' O.C.
W4	EXTERIOR BEARING WALL	2X6	16"	YES	19/32" WSP	HDQ8-SDS3	2(2X6)	1(2X6)	5/8" DIA. 7" EMBED, STEEL J ANCHOR BOLT @ 3' O.C.
W5	INTERIOR NONBEARING WALL WITH SOUND PROOF	2X6	16"	NO	NON	NON	2(2X4)	1(2X4)	5/8" DIA. 7" EMBED, STEEL J ANCHOR BOLT @ 4' O.C. OR 1/4" DIA., 2-3/4" IN LENGTH, 410 STAINLESS STEEL TAPCON SCREWS @ 16" O.C.
W6	INTERIOR NONBEARING WALL/PARTITION	2X4	16"	NO	NON	NON	2(2X4)	1(2X4)	5/8" DIA. 7" EMBED, STEEL J ANCHOR BOLT @ 4' O.C. OR 1/4" DIA., 2-3/4" IN LENGTH, 410 STAINLESS STEEL TAPCON SCREWS @ 16" O.C.

NOTE:
1. WSP = WOOD STRUCTURAL PANEL
2. INTERIOR NON-BEARING WALLS/PARTITION WALLS CONTAINING PLUMBING PIPES OR REQUIRED SOUND PROOF INSULATION SHOULD BE CONSTRUCTED FROM 2×6 STUDS AT 16" O.C.

HEADER SCHEDULE

MARK	WALL TYPE	OPENING TYPE	MAX OPENING SIZE	KING STUD	JACK STUD (TRIMMER)	HEADER FRAMING	ROUGH SILL PLATE	CRIPPLE STUD ABOVE/BELOW OPENING	BEARING LENGTH FOR FULL WIDTH OF THE HEADER
H1	W1, W2, W4	MAN DOOR, WINDOW, LOUVER	4'	2X6	2 (2X6)	2 (2X8)	1(2X6)	(2X6) @ 16" O.C.	3"
H2	W2	DOUBLE DOOR	7'	2X6	2 (2X6)	3 (2X12)	1(2X6)	(2X6) @ 16" O.C.	3"
H3	W6	MAN DOOR	4'	2X4	2X4	2 (2X4)	1(2X4)	(2X4) @ 16" O.C.	3"

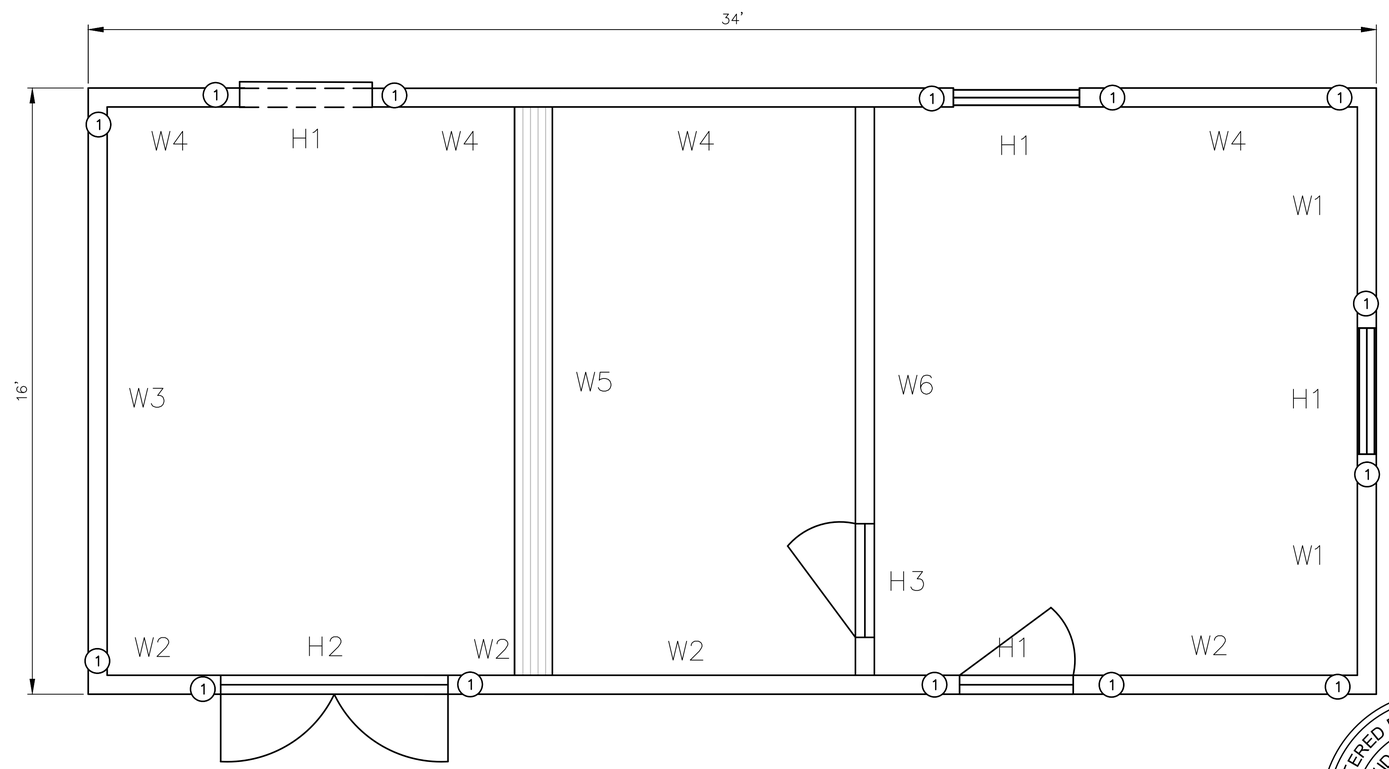

REGISTERED PROFESSIONAL ENGINEER
DAVID BARTON BROOKE
NO. 72417
CIVIL
STATE OF CALIFORNIA
100% DRAFT

DESIGNED: D. BROOKE CADD M. GARCIA TECH. REVIEW: J. BLOM DATE: 04/07/2022	SUB SHEET NO. S1.7	TITLE OF SHEET CONTROL BUILDING WALL FRAMING REHABILITATE ASH AND BUCKEYE WASTEWATER TREATMENT PLANTS SEQUOIA & KINGS CANYON NATIONAL PARKS	DRAWING NO. 102/177,507 PMIS/PKG NO. 317446 SHEET 74 OF 135

25/04/2022 15:40 MARIO GARCIA G:\CLIENTS\NPS\SEK(\317446\DRAWINGS\ASH MOUNTAIN DWGS\10_STRUCTURAL SHEETS AMWWTP\74 - CONTROL BUILDING WALL FRAMING.DWG

SHEET NOTES:

1. SEE SHEET S1.11 FOR TRUSS B01 PROFILES.

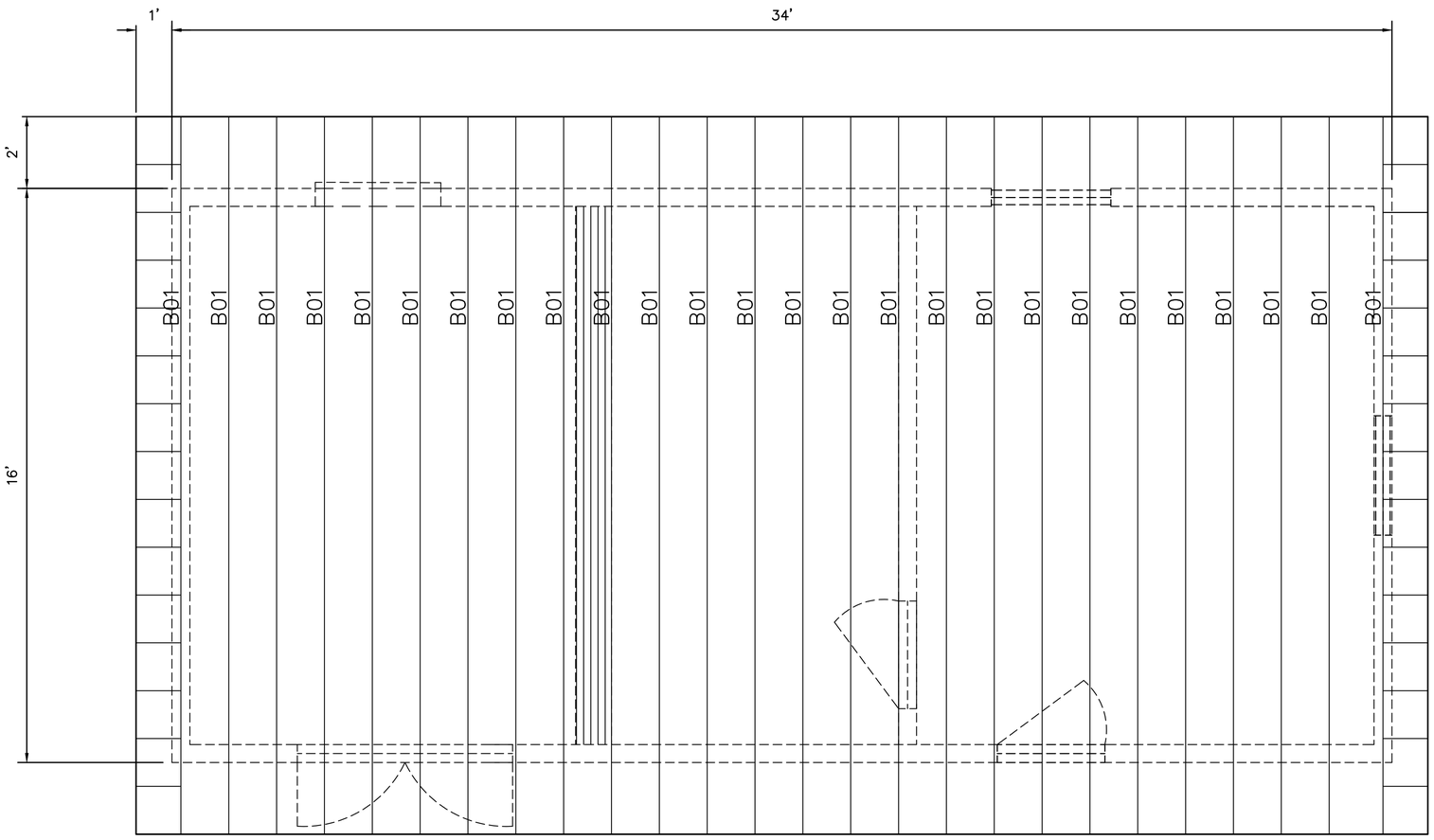

REGISTERED PROFESSIONAL ENGINEER
DAVID BARTON BROOKE
NO. 72417
100% DRAFT
CIVIL
STATE OF CALIFORNIA

DESIGNED: D. BROOKE CADD M. GARCIA TECH. REVIEW: J. BLOM DATE: 04/07/2022	SUB SHEET NO. S1.8	TITLE OF SHEET CONTROL BUILDING ROOF FRAMING REHABILITATE ASH AND BUCKEYE WASTEWATER TREATMENT PLANTS SEQUOIA & KINGS CANYON NATIONAL PARKS	DRAWING NO. 102/177,507 PMIS/PKG NO. 317446 SHEET 75 OF 135

25/04/2022 15:41 MARIO GARCIA G:\CLIENTS\NPS\SEK\317446\DRAWINGS\ASH MOUNTAIN DWGS\10_STRUCTURAL SHEETS AMWWTP\75 - CONTROL BUILDING ROOF FRAMING.DWG

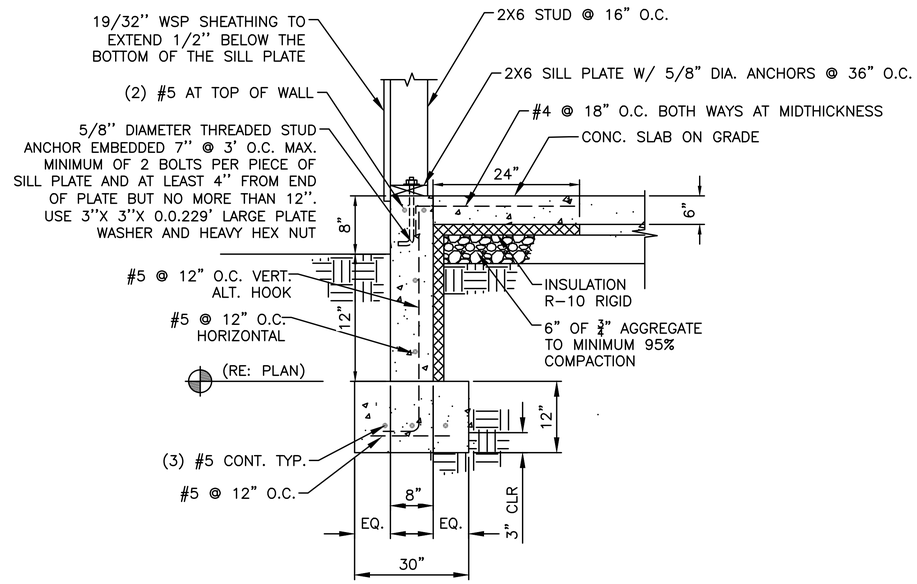

1 S1.9 TYPICAL EXTERIOR FOOTING
NTS

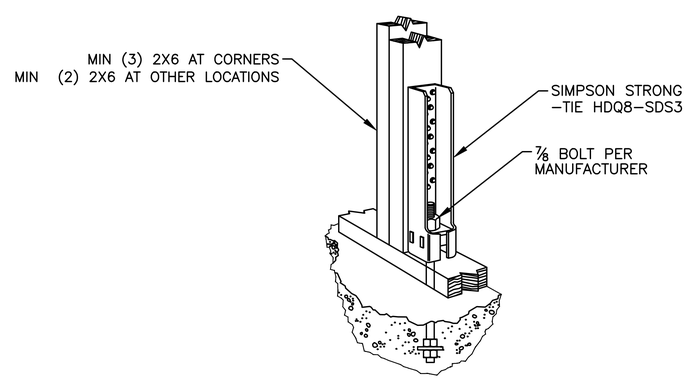

2 S1.9 HOLD DOWN DETAILS
NTS

REGISTERED PROFESSIONAL ENGINEER
DAVID BARTON BROOKE
NO. 72417
100% DRAFT
CIVIL
STATE OF CALIFORNIA

DESIGNED: D. BROOKE CADD M. GARCIA TECH. REVIEW: J. BLOM DATE: 04/07/2022	SUB SHEET NO. S1.9	TITLE OF SHEET CONTROL BUILDING DETAILS – FOUNDATIONS REHABILITATE ASH AND BUCKEYE WASTEWATER TREATMENT PLANTS SEQUOIA & KINGS CANYON NATIONAL PARKS	DRAWING NO. 102 / 177,507 PMIS/PKG NO. 317446 SHEET 76 OF 135

25/04/2022 15:41 MARIO GARCIA G:\CLIENTS\NPS\SEKI\317446\DRAWINGS\ASH MOUNTAIN DWGS\10_STRUCTURAL SHEETS AMWWTP\76-78 - CONTROL BUILDING STRUCTURAL DETAILS.DWG

HOLDOWN & FASTENER SCHEDULE (HF STUDS)

MARK	HARDWARE TYPE	WOODMEMBER/POST		FASTENER	ROD DIAMETER	ANCHOR		EMBEDMENT		STEM (MINIMUM)	DETAILS
		2X4 WALL	2X6 WALL			STEM	THICKENED FOOTING	STEM	THICKENED SLAB		
1	HDQ8-SDS3	N/A	2 (2X6) (5)	(20) SDS 1/4X3"	7/8" (6)	HEADED HEAVY HEX BOLT (6)	N/A	11"	N/A	8"	3/S5.1

HOLDOWN AND FASTENER SCHEDULE NOTES:
1. HOLDOWNS SHALL BE AS MANUFACTURED BY THE SIMPSON STRONG-TIE COMPANY.
2. SCREWS SHALL BE SDS $\frac{1}{4}$" DIA X 3" AS MANUFACTURED BY SIMPSON STRONG-TIE COMPANY.
3. ANCHOR BOLT NUT SHALL BE FINGER-TIGHT PLUS $\frac{1}{3}$" -1/2" TURN WITH HAND WRENCH. CARE SHALL BE TAKEN TO NOT OVER-TORQUE THE NUT. IMPACT WRENCHES SHALL NOT BE USED.
4. HDQ8 HOLDOWNS SHALL BE INSTALLED CENTERED ALONG THE WIDTH OF THE ATTACHED POST/STUD.
5. USE 3 (2X6) AT CORNERS
6. MATERIAL OF THE HEADED HEAVY HEX BOLT SHALL BE ASTM-F 1554, GR55.

1 S1.10 HOLDOWN & FASTENER SCHEULE
NTS

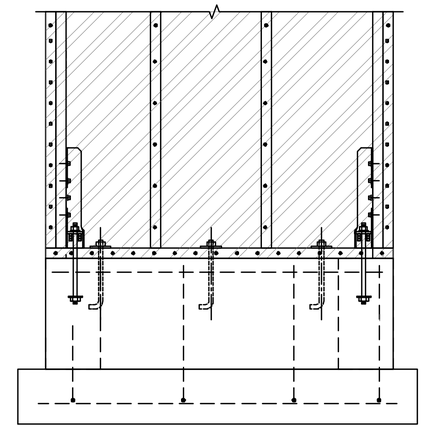

2 S1.10 EXTERIOR HOLDOWN – ELEVATION
NTS

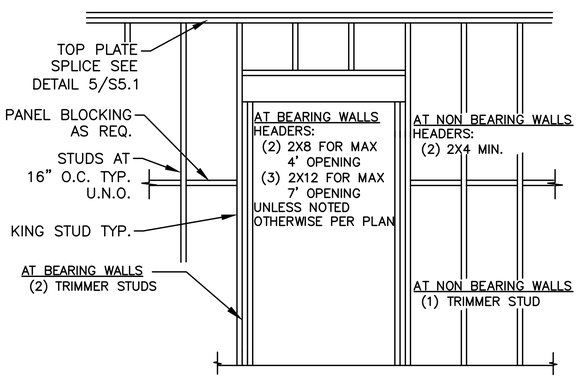

4 S1.10 TYPICAL HEADER AT STRUCTURAL WALL
NTS

SHEARWALL SCHEDULE - APA RATED SHEATHING

WALL TYPE	SHEATHING	PANEL EDGE NAILING SPACING	FIELD NAILING SPACIN G	BLOCKING TO TOP PLATE CONNECTING (SIDE WALLS W2 & W4)		TRUSS BOT CHORD TO TOP PLATE CONNECTION (END WALLS W1 & W3)	FRAMING @ ADJOINING PANEL EDGES	ANCHOR BOLT SPACING $\frac{5}{8}$" DIA. 7" EMBED
				LTP4 DIRECT TO FRAMING	LTP4 OVER PLYWOOD SHEATHING	HGA10KT DIRECT TO FRAMING		
W1, W2, W3 & W4	19/32" WSP ON EXTERIOR SIDE ONLY	6" O.C.	12" O.C.	16" O.C.	N/A (3)	48" O.C.	2X	36" O.C.

SHEARWALL SCHEDULE NOTES:
1. THE SHEATHING AT W1, W2, W3 & W4 MUST BE NAILED DIRECTLY TO THE FRAMING, STUDS, & PLATES
2. SHEATHING NAILS SHALL BE DRIVEN SO THAT THEIR HEAD OR CROWN IS FLUSH WITH THE SURFACE OF THE SHEATHING.
3. LTP4 TO BE INSTALLED OVER WOOD STRUCTURAL PANEL SHEATHING SHALL BE NAILED WITH 0.131" X 2-1/2" NAILS (8d COMMON)

SHEARWALL SCHEDULE KEYNOTES:
1. DOUBLE TOP PLATE
   USE 10D BOX (3"X0.128") NAILS AT 6"O.C. TWO LONGITUDINAL ROWS TO CONNECT TOP PLATE MEMBERS (SPACING BETWEEN ROWS=2.5" O.C., END DISTANCE=2" AND EDGE DISTANCE=1.5"). LAP AND SPLICE SEE DETAIL 5 ON THIS SHEET.
2. WALL SHEATHING AND NAILS
   SHEATHING PANELS MAY BE INSTALLED VERTICALLY OR HORIZONTALLY. ALL PANELS EDGES SHALL BE FASTENED TO STUDS OR BLOCKING. 10d COMMON NAILS SHALL BE USED TO ATTACH SHEATHING TO STUDS. MIN. NAIL PENETRATION INTO WOOD SUBSTRATE IS 1 1/2".
3. PANEL EDGE NAILING
   NAILING AT ALL OUTER EDGES OF SHEATHING PANELS IN SHEARWALLS SHALL BE FASTENED PER THE SHEARWALL SCHEDULE
4. FIELD NAILING
   WITHIN THE FIELD OF THE PANEL AT FRAMING MEMBERS
5. FRAMING AT ADJOINING PANEL EDGES
   WHERE TWO PIECES OF PLYWOOD JOIN FRAMING MEMBER, THE PANEL EDGE NAILING FROM EACH PANEL SHALL BE STAGGERED. WALLS REQUIRE 2" NOMINAL FRAMING MEMBER (EITHER A STUD OR BLOCKING) AT ADJOINING PANEL EDGES.
6. FOUNDATION SILL PLATE
   2" FOUNDATION SILL PLATE.
7. ANCHOR BOLTS
   AT PERIMETER OF BUILDING FULL DIAMETER ANCHOR BOLTS, ASTM F1554 – GRADE 55 SHALL BE SECURED IN PLACE PRIOR TO PLACING CONCRETE. MINIMUM EMBEDMENT IS 7".
8. PLATE WASHERS
   PLATE WASHERS SHALL BE REQUIRED FOR FOUNDATION SILL PLATE CONNECTIONS, 3" X 3" X 0.229" MINIMUM. DO NOT RECESS BOLTS IN SILL PLATE.
9. ROOF BLOCKING PANELS
   WHERE SHEARWALLS CONNECT TO THE ROOF DIAPHRAGM, BLOCKING PANELS SHALL BE PROVIDED CAPABLE OF TRANSFERRING 300PLF OF SHEAR TO SHEARWALL BELOW
10. RIM/BLOCKING TO TOP PLATE CONNECTIONS
    THE CONTINUOUS RIM OR SOLID BLOCKING THAT IS PART OF THE SHEARWALL ASSEMBLY SHALL BE CONNECTED TO THE DOUBLE TOP PLATE OR FOUNDATION SILL PLATE WITH APPROVED CONNECTORS AND SPACED PER THE SHEARWALL SCHEDULE.

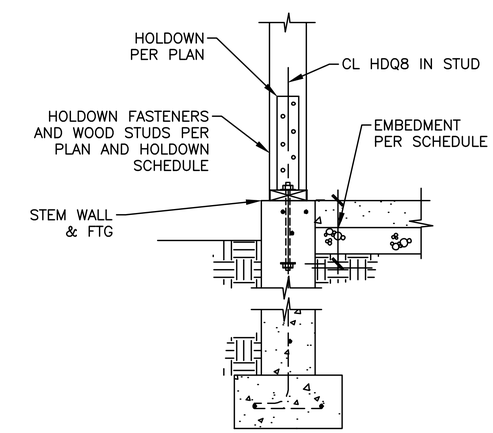

3 S1.10 HDQ8-SDS3 HOLDOWN – SECTION
NTS

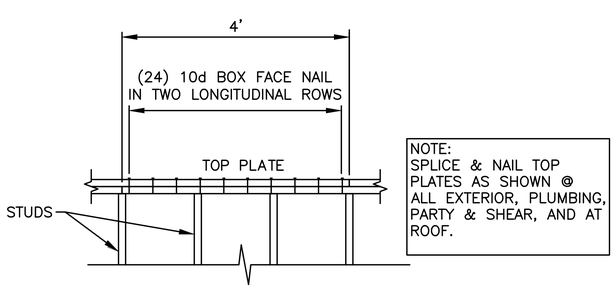

5 S1.10 TYPICAL TOP PLATE SPLICE
NTS

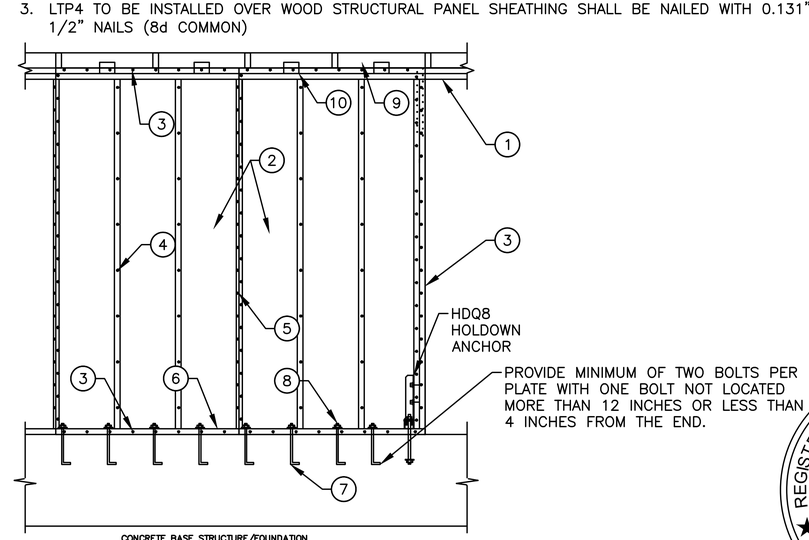

6 S1.10 TYPICAL SHEARWALL NOMENCLATURE (ELEVATION)
NTS

REGISTERED PROFESSIONAL ENGINEER
DAVID BARTON BROOKE
NO. 2417
CIVIL
STATE OF CALIFORNIA
100% DRAFT

DESIGNED: D. BROOKE	SUB SHEET NO.	TITLE OF SHEET	DRAWING NO.
CADD M. GARCIA	S1.10	CONTROL BUILDING DETAILS – WALLS	102 / 177,507
TECH. REVIEW: J. BLOM		REHABILITATE ASH AND BUCKEYE WASTEWATER TREATMENT PLANTS SEQUOIA & KINGS CANYON NATIONAL PARKS	PMIS/PKG NO. 317446
DATE: 04/07/2022			SHEET 77 OF 135

25/04/2022 15:41 MARIO GARCIA G:\CLIENTS\NPS\SEK\317446\DRAWINGS\ASH MOUNTAIN DWGS\10_STRUCTURAL SHEETS AMWWTP\76-78 – CONTROL BUILDING STRUCTURAL DETAILS.DWG

SHEET NOTES:

1. THE TRUSS ELEVATION SHOWN IN THIS SHEET ARE CONCEPTUAL TRUSS SHAPES. ACTUAL TRUSS MEMBERS SIZES ARE PER THE TRUSS MANUFACTURER.
2. THE CONTRACTOR IS TO COORDINATE WITH THE TRUSS MANUFACTURER TO ACCOMMODATE MECHANICAL, HVAC, AND ELECTRICAL ELEMENTS.

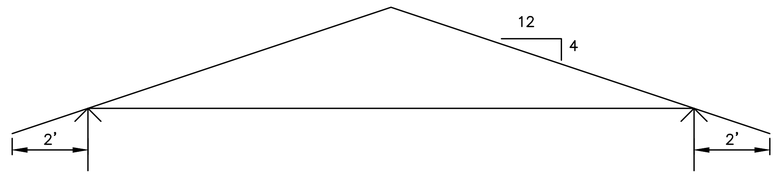

1 / S1.11 B01 TRUSS ELEVATION
NTS

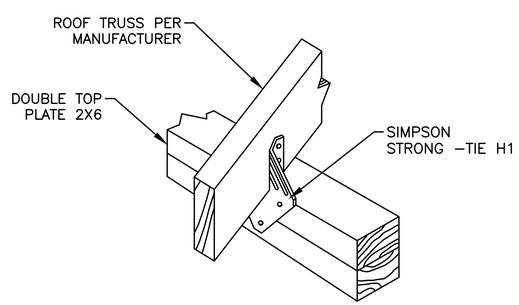

2 / S1.11 TRUSS TO SIDE WALL CONNECTION
NTS

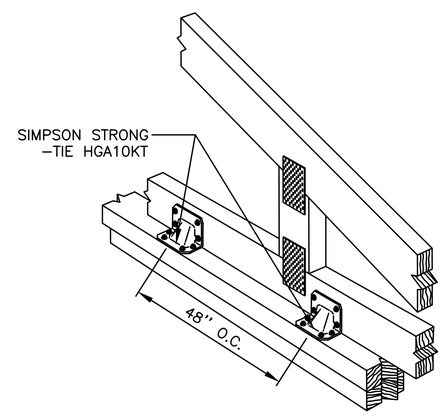

3 / S1.11 TRUSS TO END WALL CONNECTION
NTS

REGISTERED PROFESSIONAL ENGINEER
DAVID BARTON BROOKE
NO. 72417
CIVIL
STATE OF CALIFORNIA
100% DRAFT

DESIGNED: D. BROOKE CADD M. GARCIA TECH. REVIEW: J. BLOM DATE: 04/07/2022	SUB SHEET NO. S1.11	TITLE OF SHEET CONTROL BUILDING DETAILS – ROOF REHABILITATE ASH AND BUCKEYE WASTEWATER TREATMENT PLANTS SEQUOIA & KINGS CANYON NATIONAL PARKS	DRAWING NO. 102 / 177,507 PMIS/PKG NO. 317446 SHEET 78 OF 135

25/04/2022 15:41 MARIO GARCIA G:\CLIENTS\NPS\SEK\317446\DRAWINGS\ASH MOUNTAIN DWGS\10_STRUCTURAL SHEETS AMWWTP\76-78 – CONTROL BUILDING STRUCTURAL DETAILS.DWG

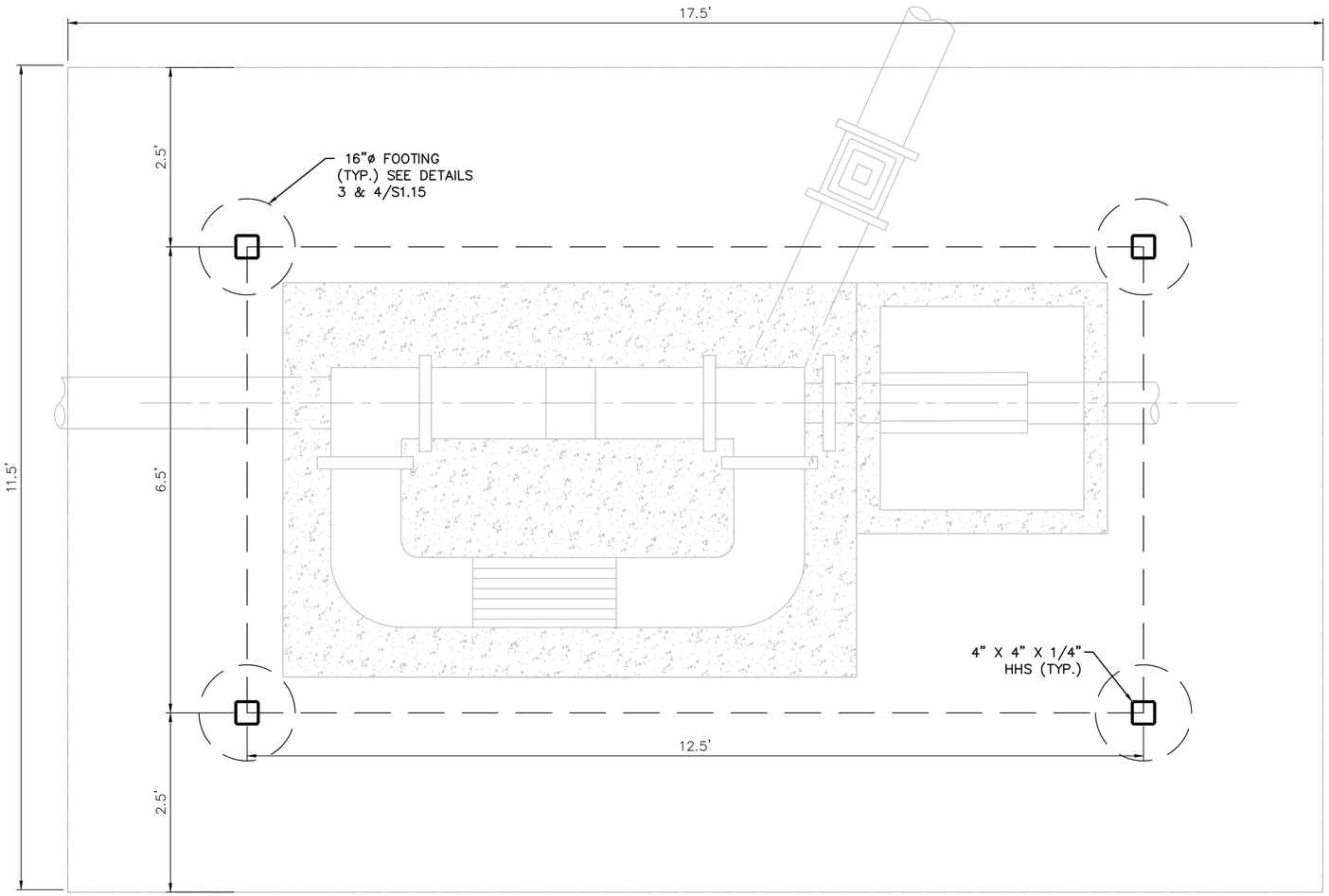

HEADWORKS FOUNDATION PLAN

REGISTERED PROFESSIONAL ENGINEER
DAVID BARTON BROOKE
NO. 70417
CIVIL
STATE OF CALIFORNIA
100% DRAFT

1' 0 1' 2'
SCALE OF FEET

DESIGNED: D. BROOKE CADD M. GARCIA TECH. REVIEW: J. BLOM DATE: 04/07/2022	SUB SHEET NO. S1.12	TITLE OF SHEET HEADWORKS SHED FOUNDATION PLAN REHABILITATE ASH AND BUCKEYE WASTEWATER TREATMENT PLANTS SEQUOIA & KINGS CANYON NATIONAL PARKS	DRAWING NO. 102 / 177,507 PMIS/PKG NO. 317446 SHEET 79 OF 135

25/04/2022 15:41 MARIO.GARCIA G:\CLIENTS\NPS\SEK\317446\DRAWINGS\ASH MOUNTAIN DWGS\10 STRUCTURAL SHEETS AMWWTP\79 - HEADWORKS FOUNDATION PLAN.DWG

SHEET NOTES:

1. SEE SHEET S1.15 FOR RAFTER PROFILES.
2. BLOCKING REQUIRED BETWEEN ROOF RAFTERS AT SUPPORTS.
3. FASTENERS NOT CALLED OUT. FASTEN PER FASTENING SCHEDULE ON S1.5.

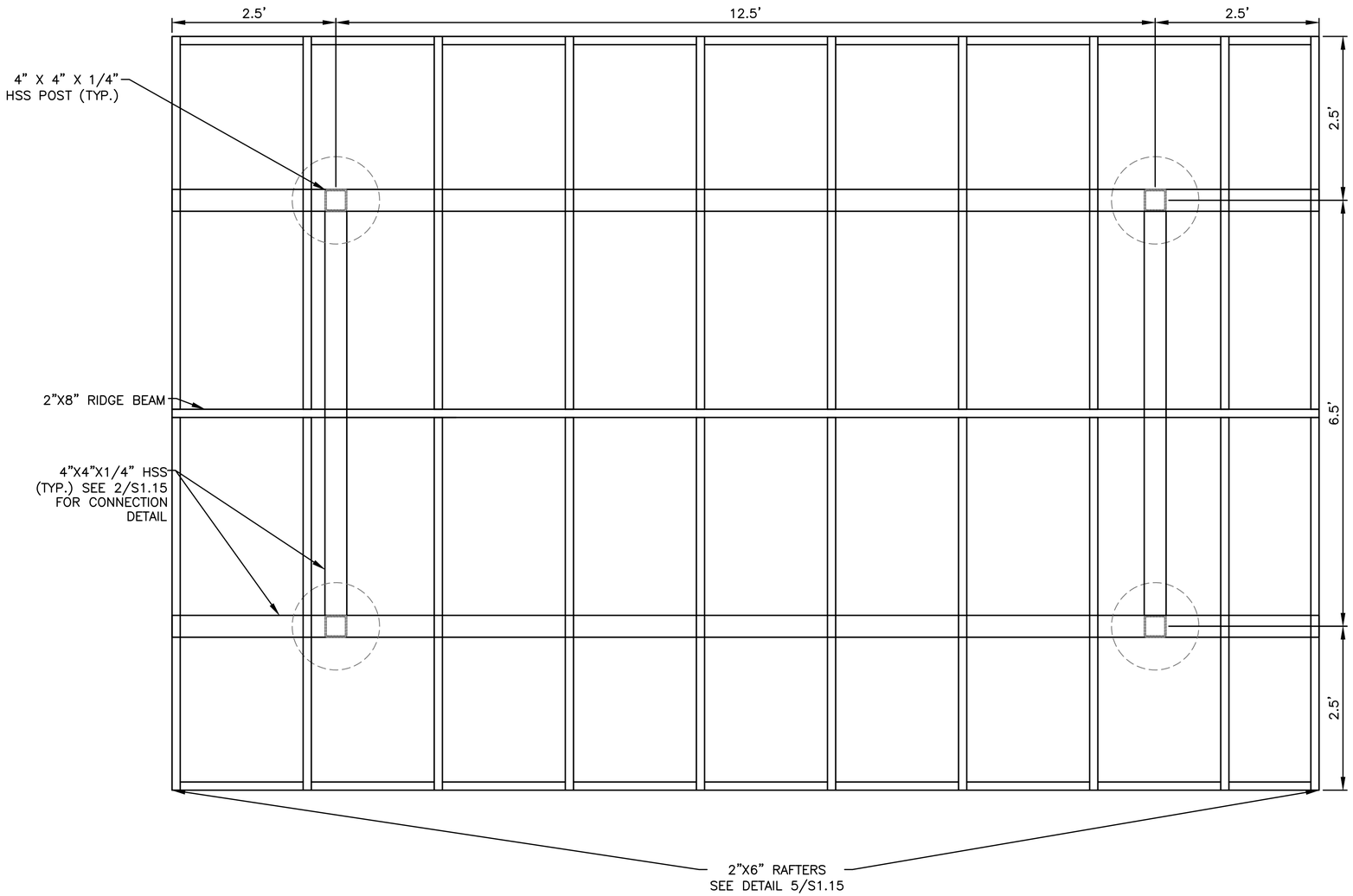

REGISTERED PROFESSIONAL ENGINEER
DAVID BARTON BROOKE
NO. 72417
100% DRAFT
CIVIL
STATE OF CALIFORNIA

1' 0 1' 2'
SCALE OF FEET

DESIGNED: D. BROOKE CADD M. GARCIA TECH. REVIEW: J. BLOM DATE: 04/07/2022	SUB SHEET NO. S1.13	TITLE OF SHEET HEADWORKS SHED ROOF FRAMING REHABILITATE ASH AND BUCKEYE WASTEWATER TREATMENT PLANTS SEQUOIA & KINGS CANYON NATIONAL PARKS	DRAWING NO. 102 / 177,507 PMIS/PKG NO. 317446 SHEET 80 OF 135

25/04/2022 15:41 MARIO GARCIA G:\CLIENTS\NPS\SEK\317446\DRAWINGS\ASH MOUNTAIN DWGS\10_STRUCTURAL SHEETS AMWWTP\80 - HEADWORKS SHED ROOF FRAMING.DWG

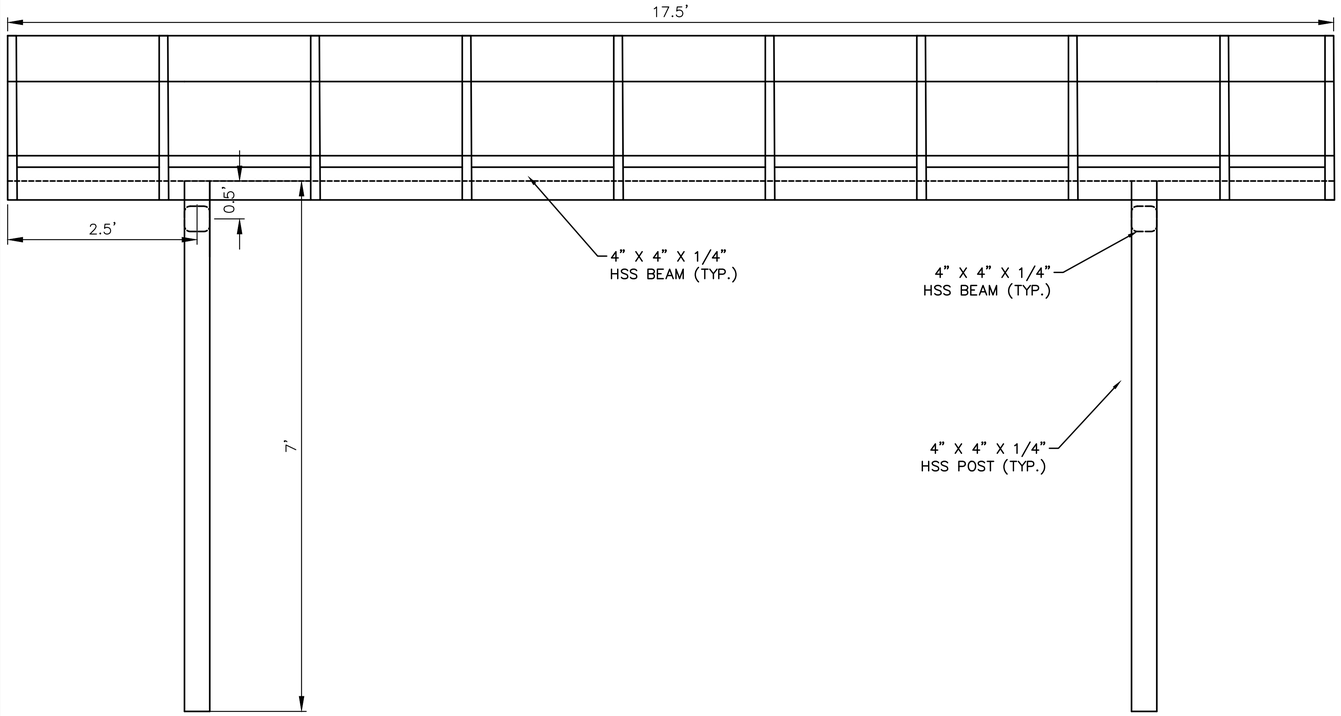

1 S1.14 HEADWORKS SHED ROOF ELEVATION
1" = 1'

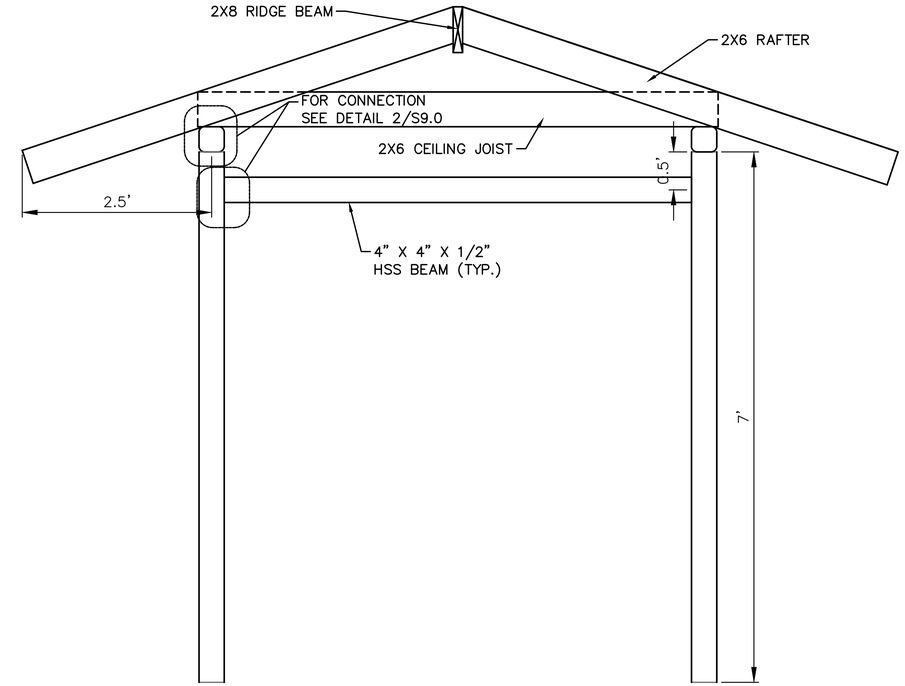

2 S1.14 HEADWORKS SHED ROOF ELEVATION

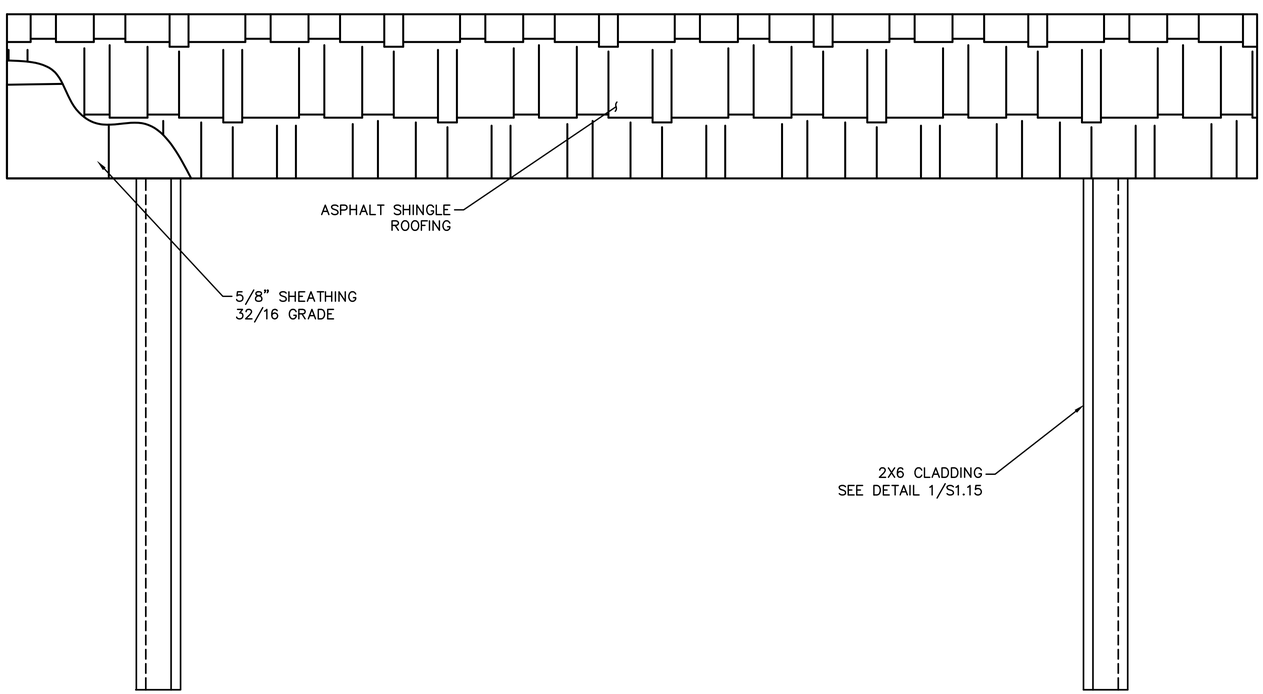

3 S1.14 HEADWORKS SHED ROOF FINISHES
1" = 1'

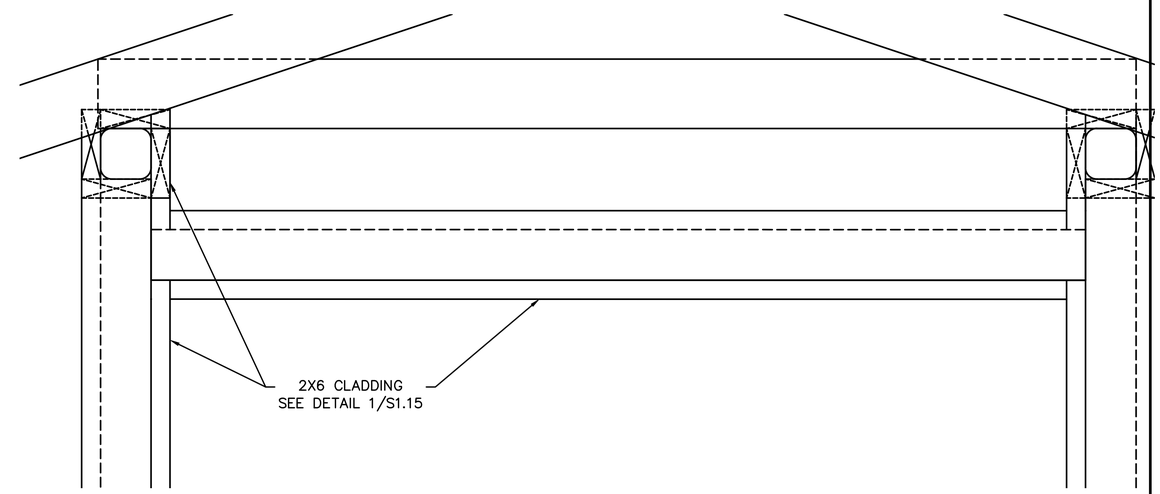

3 S1.14 HEADWORKS SHED HSS FINISHES
1" = 1'

REGISTERED PROFESSIONAL ENGINEER
DAVID BARTON BROOKE
NO. 70417
100% DRAFT
CIVIL
STATE OF CALIFORNIA

DESIGNED: D. BROOKE	SUB SHEET NO.	TITLE OF SHEET	DRAWING NO.
CADD: M. GARCIA	S1.14	HEADWORKS SHED FRMG ELEV	102 / 177,507
TECH. REVIEW: J. BLOM		REHABILITATE ASH AND BUCKEYE WASTEWATER TREATMENT PLANTS SEQUOIA & KINGS CANYON NATIONAL PARKS	PMIS/PKG NO. 317446
DATE: 04/07/2022			SHEET 81 OF 135

25/04/2022 15:41 MARIO GARCIA G:\CLIENTS\NPS\SEKI\317446\DRAWINGS\ASH MOUNTAIN DWGS\10_STRUCTURAL SHEETS AMWWTP\81 - HEADWORKS SHED FRMG ELEV.DWG

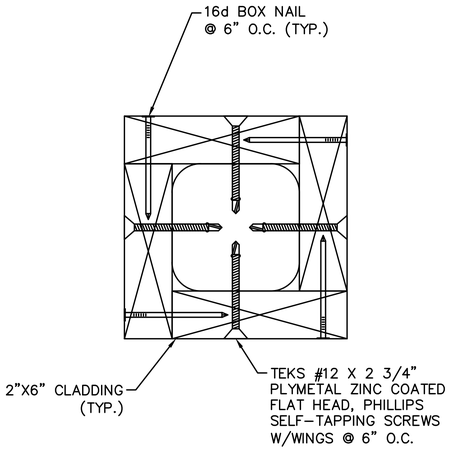

1 S1.4 WOOD TO HSS
NTS

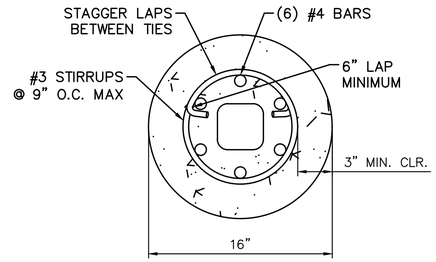

3 S1.4 FOOTING REINFORCEMENT DETAIL
NTS

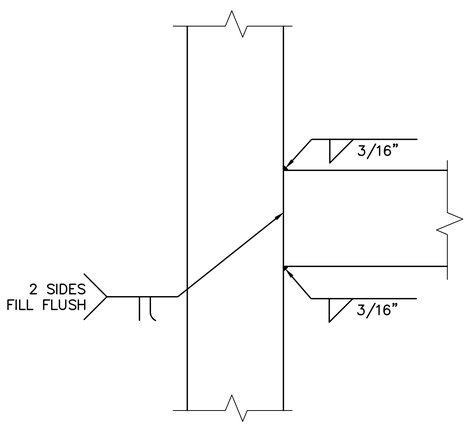

2 S1.4 HSS TO HSS CONNECTION
NTS

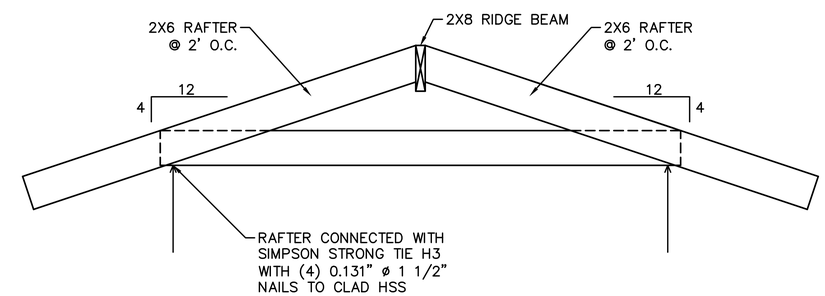

5 S1.4 TYPICAL RAFTER SECTION
NTS

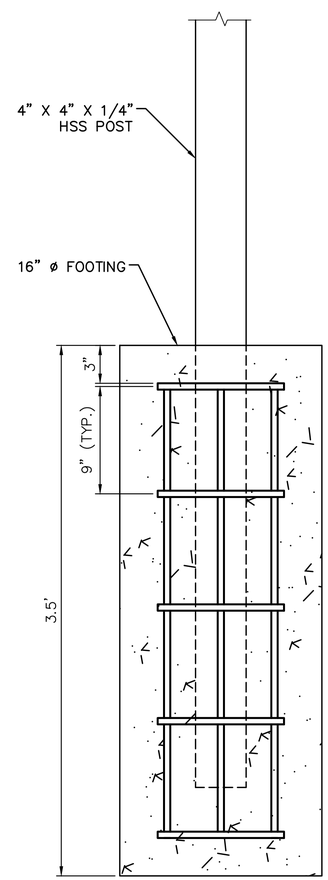

4 S1.15 POST FOOTING DETAIL
1" = 6"

REGISTERED PROFESSIONAL ENGINEER
DAVID BARTON BROOKE
NO. 72417
CIVIL
STATE OF CALIFORNIA
100% DRAFT

DESIGNED: D. BROOKE CADD M. GARCIA TECH. REVIEW: J. BLOM DATE: 04/07/2022	SUB SHEET NO. S1.15	TITLE OF SHEET HEADWORKS SHED DETAILS REHABILITATE ASH AND BUCKEYE WASTEWATER TREATMENT PLANTS SEQUOIA & KINGS CANYON NATIONAL PARKS	DRAWING NO. 102 / 177,507 PMIS/PKG NO. 317446 SHEET 82 OF 135

25/04/2022 15:41 MARIO GARCIA G:\CLIENTS\NPS\SEK\317446\DRAWINGS\ASH MOUNTAIN DWGS\10 STRUCTURAL SHEETS AMWWTP\82 - HEADWORKS SHED DETAILS.DWG

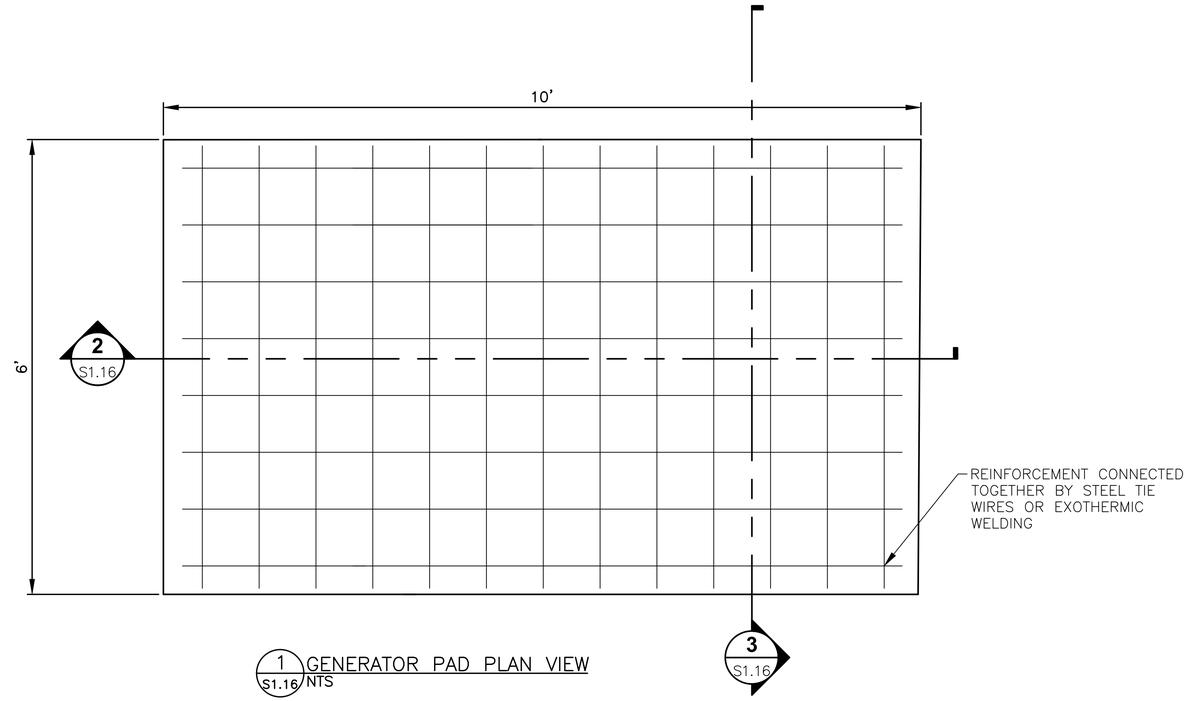

1 S1.16 GENERATOR PAD PLAN VIEW
NTS

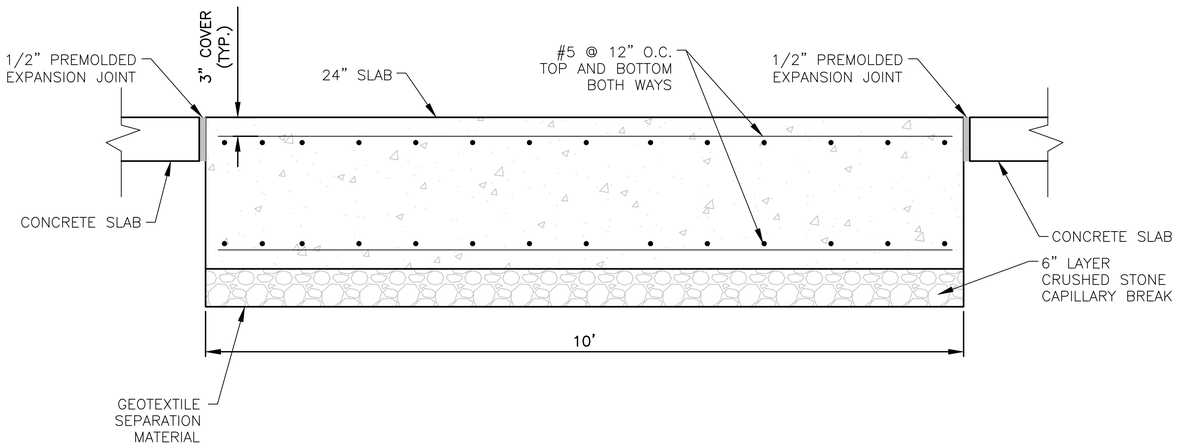

2 S1.16 GENERATOR PAD SECTION
NTS

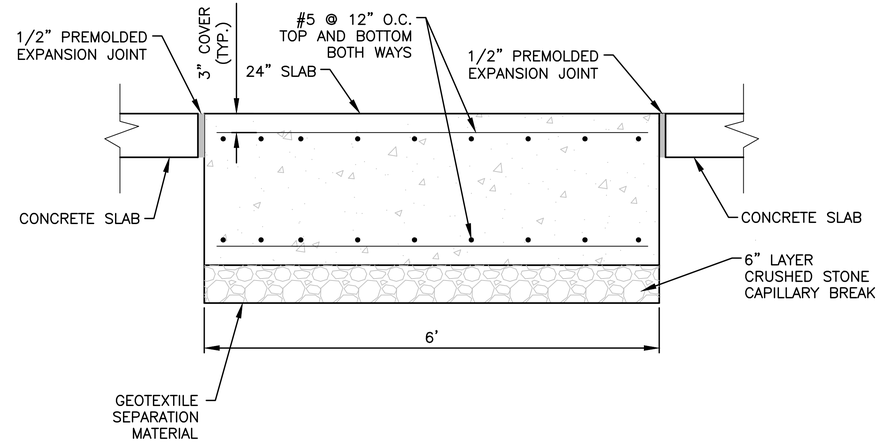

3 S1.16 GENERATOR PAD SECTION
NTS

REGISTERED PROFESSIONAL ENGINEER
DAVID BARTON BROOKE
NO. 70417
100% DRAFT
CIVIL
STATE OF CALIFORNIA

DESIGNED: D. BROOKE DRAWN: M. GARCIA TECH. REVIEW: J. BLOM DATE: 04/07/2022	SUB SHEET NO. S1.16	TITLE OF SHEET GENERATOR PAD REHABILITATE ASH AND BUCKEYE WASTEWATER TREATMENT PLANTS SEQUOIA & KINGS CANYON NATIONAL PARKS	DRAWING NO. 102 / 177,507 PMIS/PKG NO. 317446 SHEET 83 OF 135

25/04/2022 15:41 MARIO GARCIA G:\CLIENTS\NPS\SEKI\317446\DRAWINGS\ASH MOUNTAIN DWGS\10_STRUCTURAL SHEETS AMWWTP\83 - GENERATOR PAD.DWG

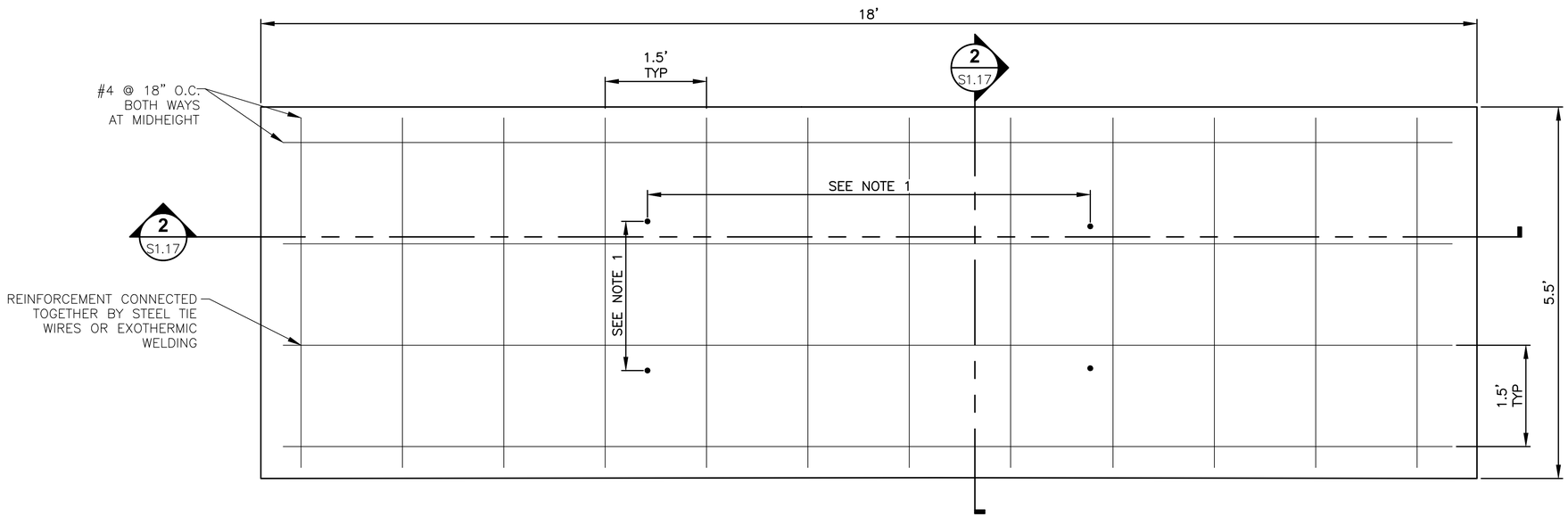

1 S1.17 PROPANE TANK PAD PLAN VIEW
NTS

NOTE

1. ANCHOR BOLT LOCATIONS PER MANUFACTURERS RECOMMENDATIONS. CONTRACTOR TO VERIFY SPACING PRIOR TO CASTING CONCRETE. ANCHOR TO BE PLACED SO THEY ATTACH THROUGH THE EXISTING HOLES IN THE PROPANE TANK STANDS/SKIDS. ANCHORS ARE TO BE ASTM F1554 GRADE 55 STEEL HEADED BOLTS, EMBEDDED 3" INTO SLAB. ANCHOR BOLT DIAMETER TO BE 1/8" LESS IN DIAMETER THAN EXISTING HOLES IN PROPANE TANK STANDS/SKIDS. IF NO EXISTING HOLES EXIST IN THE STANDS/SKIDS, BOLT DIAMETER TO BE A MINIMUM OF 1/2" DIA. AND CONTRACTOR TO DRILL HOLES 1/8" LARGER IN DIA. THROUGH THE STANDS/SKIDS. ANCHORS TO BE SECURED WITH WASHER AND NUT PER MANUFACTURER SPECIFICATIONS. IF NO INFO, STANDS/SKIDS TO BE SECURED TO HEADED ANCHOR BOLT WITH ASTM A563 HEAVY HEX NUTS TO SNUG TIGHT CONDITION.

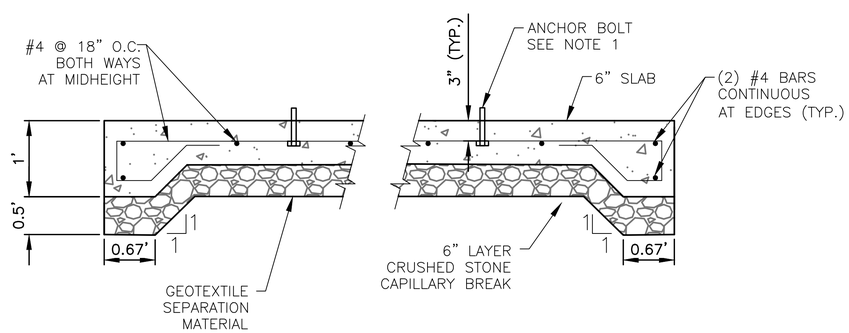

2 S1.17 PROPANE TANK PAD SECTION
NTS

REGISTERED PROFESSIONAL ENGINEER
DAVID BARTON BROOKE
NO. 70417
100% DRAFT
CIVIL
STATE OF CALIFORNIA

DESIGNED: D. BROOKE	SUB SHEET NO.	TITLE OF SHEET	DRAWING NO.
CADD M. GARCIA	S1.17	PROPANE TANK PAD	102 / 177,507
TECH. REVIEW: J. BLOM		REHABILITATE ASH AND BUCKEYE WASTEWATER TREATMENT PLANTS SEQUOIA & KINGS CANYON NATIONAL PARKS	PMIS/PKG NO. 317446
DATE: 04/07/2022			SHEET 84 OF 135

25/04/2022 15:41 MARIO GARCIA G:\CLIENTS\NPS\SEKI\317446\DRAWINGS\ASH MOUNTAIN DWGS\10_STRUCTURAL SHEETS AMWWTP\84 - PROPANE TANK PAD.DWG

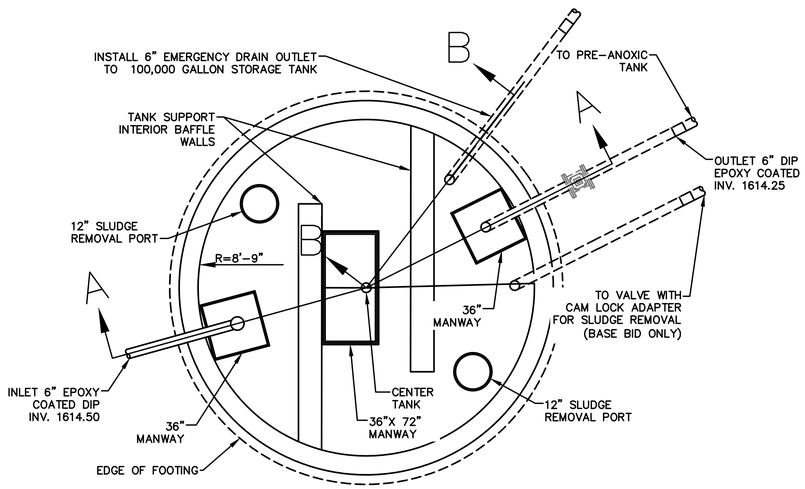

1 / S1.18 PLAN VIEW-PRIMARY TREATMENT TANK AMWWTP
SCALE: NTS

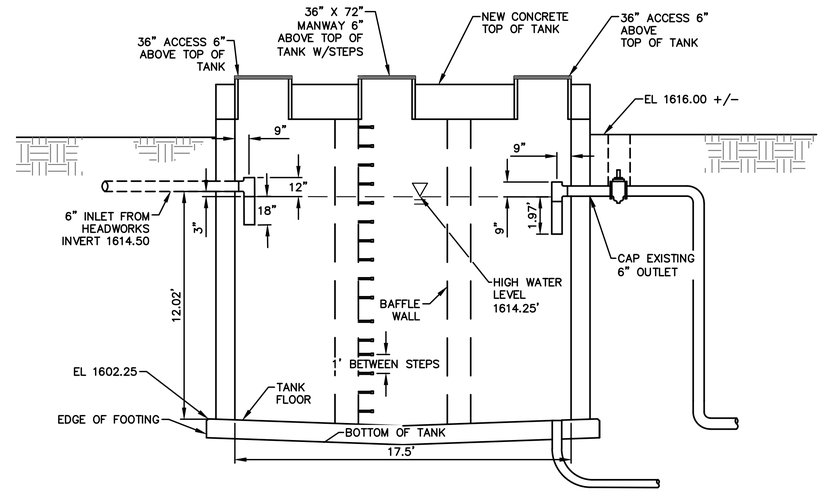

2 / S1.18 SECTION VIEW-PRIMARY TREATMENT TANK AMWWTP
SCALE: NTS

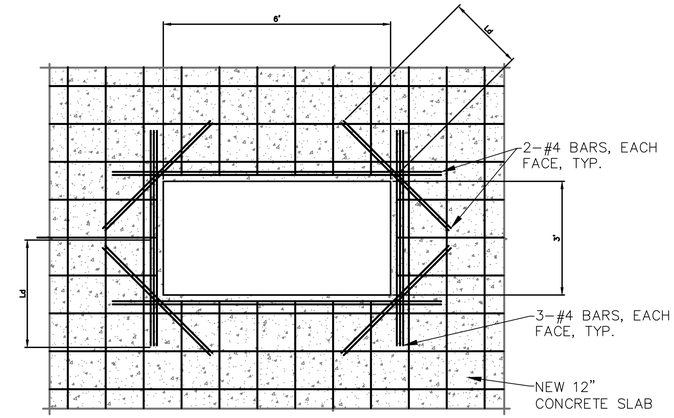

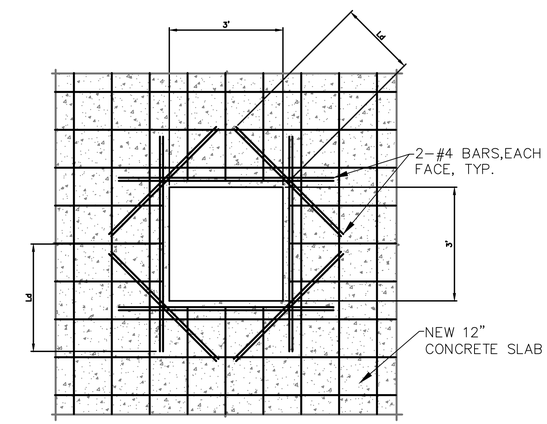

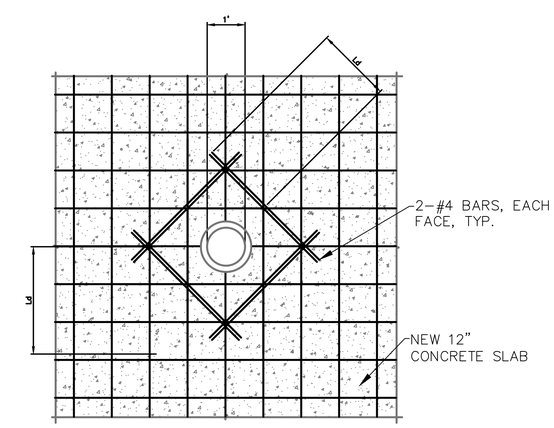

5 / S1.18 SLAB OPENING DETAILS
SCALE: NTS

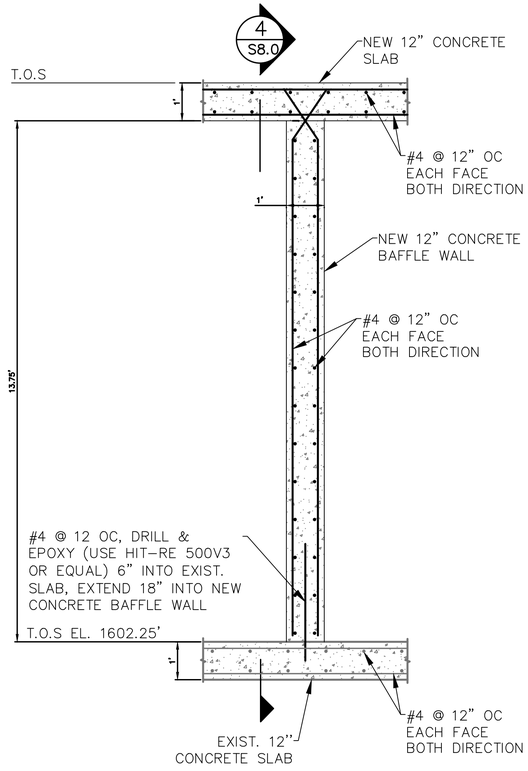

3 / S1.18 TYPICAL BAFFLE WALL SECTION
SCALE: NTS

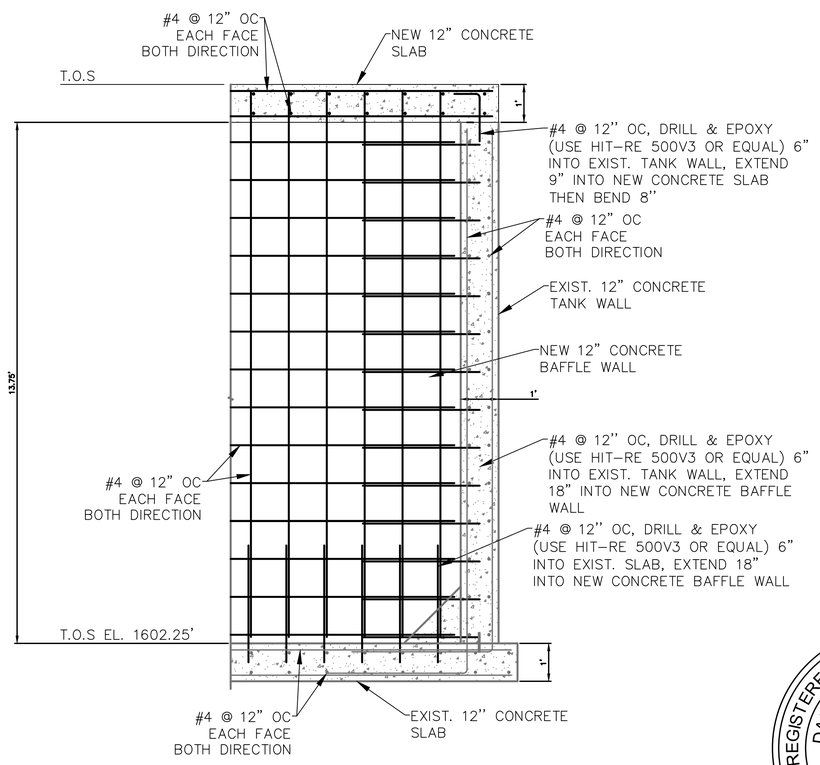

4 / S1.18 TYPICAL BAFFLE WALL SECTION
SCALE: NTS

REGISTERED PROFESSIONAL ENGINEER
DAVID BARTON BROOKE
NO. 19417
CIVIL
STATE OF CALIFORNIA
100% DRAFT

DESIGNED: D. BROOKE CADD: M. GARCIA TECH. REVIEW: J. BLOM DATE: 04/07/2022	SUB SHEET NO. S1.18	TITLE OF SHEET PRIMARY TREATMENT TANK REHABILITATE ASH AND BUCKEYE WASTEWATER TREATMENT PLANTS SEQUOIA & KINGS CANYON NATIONAL PARKS	DRAWING NO. 102 / 177,507 PMIS/PKG NO. 317446 SHEET 85 OF 135

25/04/2022 15:41 MARIO GARCIA G:\CLIENTS\NPS\SEKI\317446\DRAWINGS\ASH MOUNTAIN DWGS\10_STRUCTURAL SHEETS AMWWTP\85 - PRIMARY TREATMENT TANK.DWG

SHEET NOTES:

1. CONCRETE TANK DESIGN BY TANK MANUFACTURER SHALL SUPERSEDE TANK FOUNDATION PLAN AND DETAILS SHOWN, UPON ACCEPTANCE PER SUBMITTAL PROCEDURE.

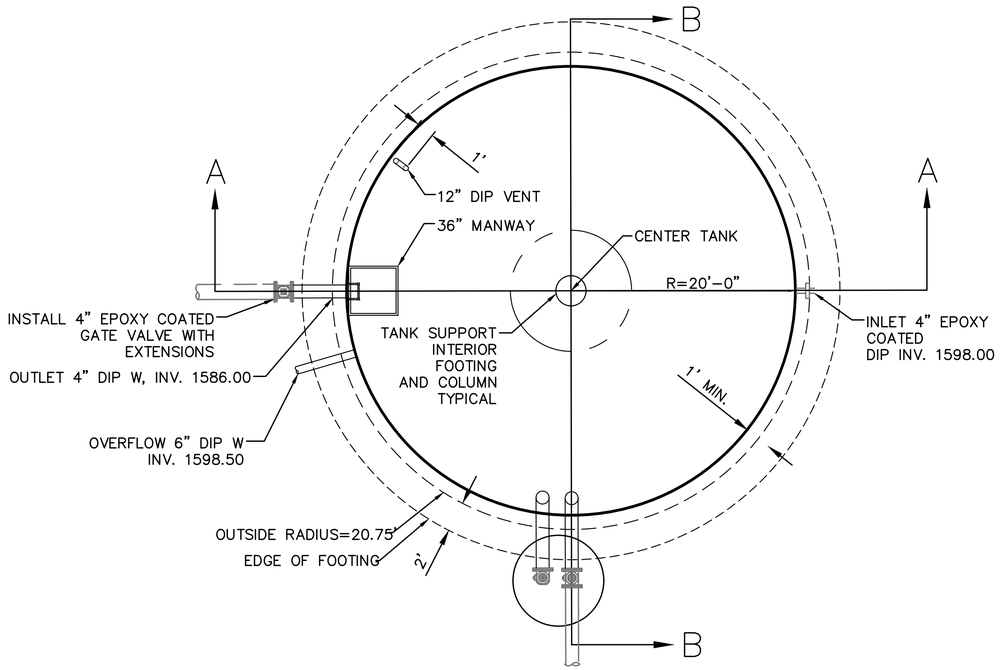

1 / S1.19 PLAN VIEW – AMWWTP 100,000 GALLON STORAGE TANK
NTS

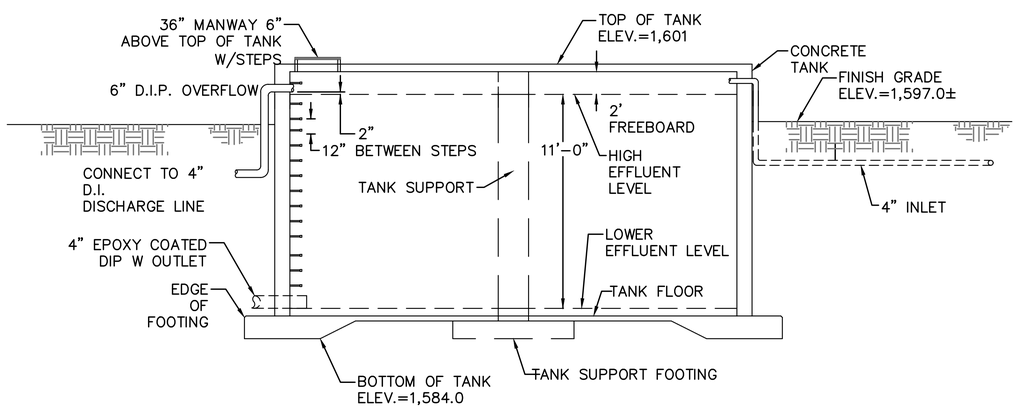

2 / S1.19 SECTION A–A – AMWWTP 100,000 GALLON STORAGE TANK
NTS

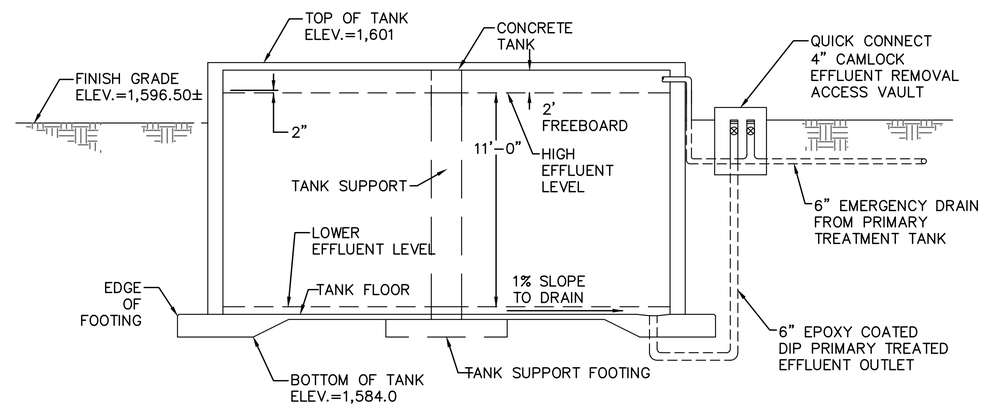

3 / S1.19 SECTION B–B – AMWWTP 100,000 GALLON STORAGE TANK
NTS

REGISTERED PROFESSIONAL ENGINEER
DAVID BARTON BROOKE
NO. 74417
CIVIL
STATE OF CALIFORNIA
100% DRAFT

DESIGNED: D. BROOKE CADD M. GARCIA TECH. REVIEW: J. BLOM DATE: 04/07/2022	SUB SHEET NO. S1.19	TITLE OF SHEET STORAGE TANK REHABILITATE ASH AND BUCKEYE WASTEWATER TREATMENT PLANTS SEQUOIA & KINGS CANYON NATIONAL PARKS	DRAWING NO. 102 / 177,507 PMIS/PKG NO. 317446 SHEET 86 OF 135

25/04/2022 15:41 MARIO GARCIA G:\CLIENTS\NPS\SEK\317446\DRAWINGS\ASH MOUNTAIN DWGS\10_STRUCTURAL SHEETS AMWWTP\86 – STORAGE TANK.DWG

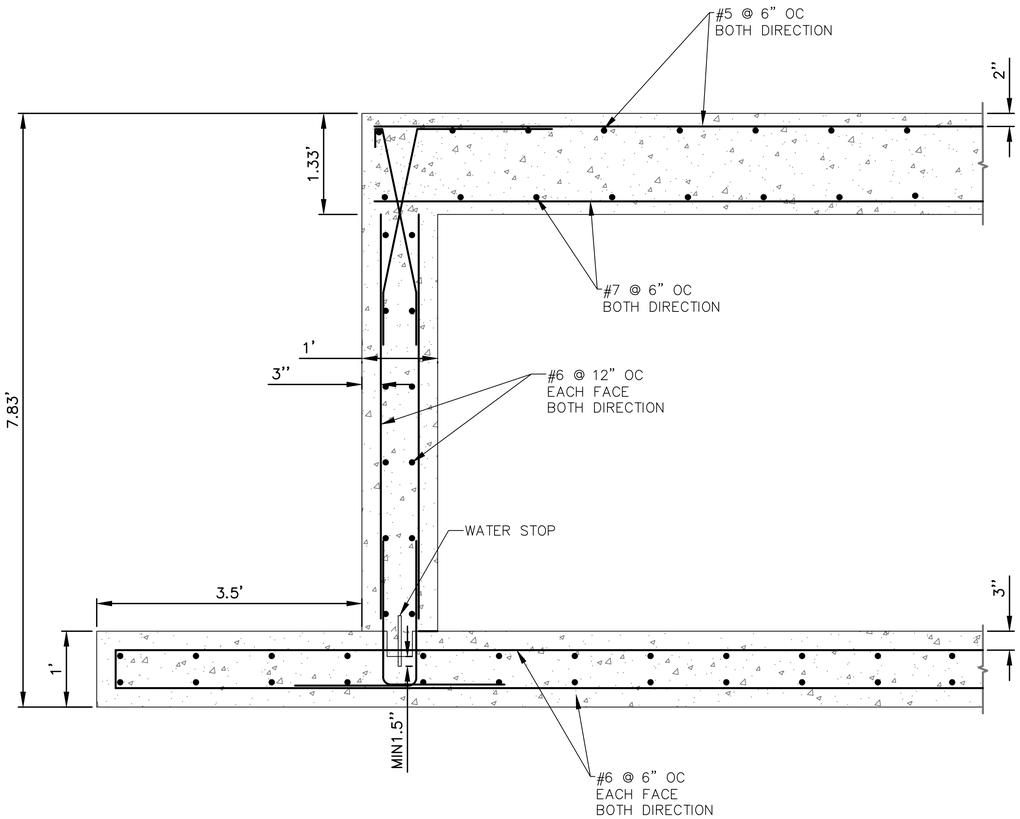

1 S1.20 TANK SECTION
SCALE: NTS

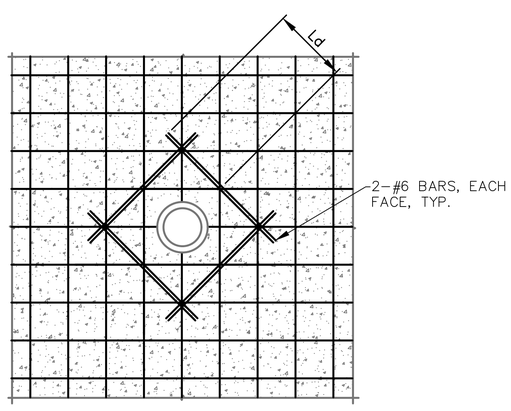

2 S1.20 PIPE PENETRATION THROUGH TANK WALL DETAIL
SCALE: NTS

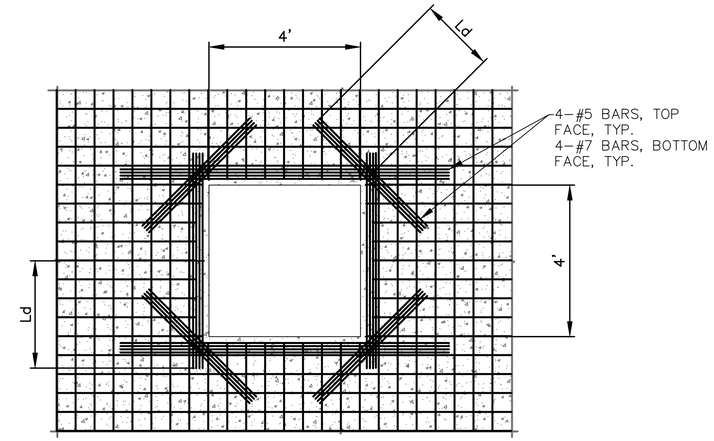

3 S1.20 ACCESS HATCH THROUGH TANK SLAB DETAIL
SCALE: NTS

NOTES:
1. LAP WALL AT SPLICES Lb. SEE DETAIL 3/S1.4.
2. ALL VERTICAL REINFORCEMENT IN CONCRETE SHALL BE CONTINUOUS FROM STRUCTURAL FOOTING TO FIRST STRUCTURAL FLOOR/SLAB ABOVE, UNLESS NOTED OTHERWISE.
3. START HORIZONTAL AND VERTICAL BARS 1-INCH CLEAR OF EDGE OF OPENINGS. SPACE REINFORCEMENT BARS AT EQUAL SPACES NOT TO EXCEED REQUIRED SPACING.
4. REFER TO DEVELOPMENT LENGTH AND LAP SPLICE TABLES FOR VALUE OF Ld, Lb. AS SHOWN IN DETAIL 3/S1.4.
5. SPLICES IN HORIZONTAL REINFORCEMENT SHALL BE STAGGERED. SPLICES IN TWO CURTAINS WHERE USED SHALL NOT OCCUR IN THE SAME LOCATION, UNLESS NOTED OTHERWISE.

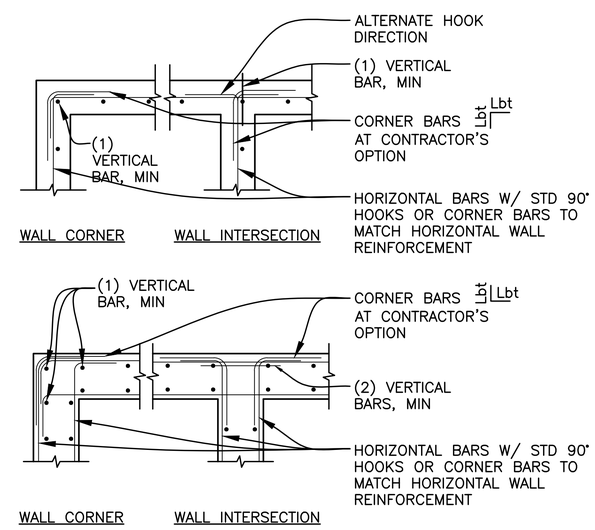

4 S1.20 TYPICAL DETAIL: CONCRETE WALL REINFORCEMENT
SCALE: NTS

REGISTERED PROFESSIONAL ENGINEER
DAVID BARTON BROOKE
NO. 70417
100% DRAFT
CIVIL
STATE OF CALIFORNIA

DESIGNED: D. BROOKE CADD M. GARCIA TECH. REVIEW: J. BLOM DATE: 04/07/2022	SUB SHEET NO. S1.20	TITLE OF SHEET PRE ANOXIC TANK REHABILITATE ASH AND BUCKEYE WASTEWATER TREATMENT PLANTS SEQUOIA & KINGS CANYON NATIONAL PARKS	DRAWING NO. 102 / 177,507 PMIS/PKG NO. 317446 SHEET 87 OF 135

25/04/2022 15:42 MARIO GARCIA G:\CLIENTS\NPS\SEK\317446\DRAWINGS\ASH MOUNTAIN DWGS\10_STRUCTURAL SHEETS AMWWTP\87 - PRE ANOXIC TANK.DWG

ELECTRICAL LEGEND

POWER SYSTEM DEVICE SYMBOLS

- DUPLEX OUTLET. +18" AFF UNO.
- FOURPLEX OUTLET. +18" AFF UNO.
- GFI OUTLET. +18" AFF UNO.
- GFI OUTLET. ABOVE COUNTER
- FOURPLEX GFI OUTLET. +18" AFF UNO.
- EQUIPMENT CONNECTION
- TL 120V TWIST LOCK RECEPTACLE.
- MOTOR CONNECTION.
- T TRANSFORMER.
- TELEPHONE/DATA OUTLET, FOUR-SQUARE DEEP TYPE BOX WITH SINGLE GANG MUDRING. LOCATED AT +18" AFF UNO. FURNISH AND PROVIDE (2) CAT 6 CABLES UNO.
- J JUNCTION BOX.
- FLUSH MOUNTED PANELBOARD/ENCLOSURE. SEE E5.0 PANEL SCHEDULE FOR TYPE.
- F X FUSED DISCONNECT SWITCH. SIZE AS INDICATED, NEMA 1 UNO, 3 POLE UNO.
- X NON-FUSED DISCONNECT SWITCH. SIZE AS INDICATED, NEMA 1 UNO, 3 POLE UNO.
- COMBINATION STARTER – SEE DRAWINGS FOR SIZE AND ENCLOSURE RATINGS.

CIRCUIT WIRING SYMBOLS

- CONDUIT STUBBED OR SLEEVE, CAPPED, AND MARKED WITH PULL CORD
- CIRCUIT CONCEALED IN CEILING OR WALL. 3/4"C–2#12,1#12G UNO.
- CIRCUIT CONCEALED IN FLOOR OR UNDERGROUND. 3/4"C–2#10,1#10G UNO.

RACEWAY SIZE
3/4"C — CONDUCTOR SIZE
CONDUCTOR QUANTITY — 2#12:C–1 — CIRCUIT NUMBER
1#12:GND
GROUNDING CONDUCTOR SIZE — PANEL

ONE–LINE DIAGRAM SYMBOLS

- PANEL ****** BRANCH PANEL.
- A CIRCUIT BREAKER. SIZE AND TYPE AS SPECIFIED.
- M METER AND BASE.
- AUTOMATIC TRANSFER SWITCH
- SERVICE GROUND. GROUND PER NEC ARTICLE 250

LIGHTING SYSTEM DEVICE SYMBOLS

- SINGLE FACE EXIT SIGN. WALL MOUNTED.
- SINGLE FACE COMBO EXIT SIGN/EMERGENCY LUMINAIRE. WALL MOUNTED.
- LIGHT FIXTURE.
- EMERGENCY EGRESS LIGHT.
- WALL PACK FIXTURE.
- EMERGENCY EGRESS LIGHT. WALL MOUNTED.
- ### ← INDICATES FIXTURE TYPE
- ### ← INDICATES MOUNTING
  - S SURFACE
  - W WALL
- S# SWITCH. TYPE AS INDICATED. +46"AFF, UNO.
  - (a) SUPERSCRIPT INDICATES LIGHTS TO BE SWITCHED TOGETHER

LOW VOLTAGE AND CONTROL SYMBOLS

- F */# H/S = FIRE ALARM SYSTEM HORN/STOBE
  S = FIRE ALARM SYSTEM STOBE ONLY
  WALL MOUNTED 80" AFF MINIMUM, +96" MAX
  * INDICATES MINIMUM dbA REQUIRED
  # INDICATES MINIMUM CANDELLA LEVEL
- MM MAG METER. FIELD COORDINATE EXACT LOCATION.
- ULS ULTRASONIC LEVEL SENSOR
- T THERMOSTAT +56" AFF
- HF PASSIVE HARMONIC FILTER
- VS VACANCY SENSOR

ABBREVIATIONS & DESCRIPTIONS

A	AMPERES
AC	ABOVE COUNTER; REFER TO ARCHITECTURAL ELEVATIONS FOR REQUIRED HEIGHT.
AFF	ABOVE FINISHED FLOOR
AFG	ABOVE FINISHED GRADE
AF	AMPERE FRAME
AHJ	AUTHORITY HAVING JURISDICTION
AT	AMP TRIP
AWG	AMERICAN WIRE GAUGE
C	CONDUIT
CB	CIRCUIT BREAKER
CKT	CIRCUIT
CO	CONDUIT ONLY, PROVIDE PULL–LINE
Cu	COPPER
DC	DIRECT CURRENT
DIA	DIAMETER
(E)	EXISTING
EF	EXHAUST FAN
EMT	ELECTRICAL MAGNETIC TUBING
F	FUSE
FVNR	FULL VOLTAGE NON–REVERSING
G/GND	GROUND
GFI	GROUND FAULT INTERRUPTION
GFP	GROUND FAULT PROTECTION
HH	HANDHOLE
HID	HIGH INTENSITY DISCHARGE
HOA	HAND OFF AUTO
HP	HORSE POWER
IC	INTERRUPTING CAPACITY
IG	ISOLATED GROUND
J/JB	JUNCTION BOX
KAIC	KILO–AMP INTERRUPTING CURRENT
KW	KILO–WATT
KVA	KILO–VOLT AMPERE
MB	MAIN BREAKER
MCC	MOTOR CONTROL CENTER
MIN	MINIMUM
MLO	MAIN LUGS ONLY
MS	MOTOR STARTER
(N)	NEW
N	NEUTRAL
NC	NORMALLY CLOSED
NCL	NON CRITICAL LOAD
NEC	NATIONAL ELECTRICAL CODE
NEMA	NATIONAL ELECTRICAL MANUFACTURERS ASSOCIATION
NIC	NOT IN CONTRACT
NO	NORMALLY OPEN
NTS	NOT TO SCALE
OL	OVERLOAD
OS	OCCUPANCY SENSOR
OFCI	OWNER FURNISHED CONTRACTOR INSTALLED
P	PHASE
PC	PHOTOCELL
PVC	POLYVINYL CHLORIDE
PWTS	PUBLIC WATER TREATMENT SYSTEM
RCPT	RECEPTACLE
(R)	RELOCATED
RE:	REFER TO
RGS	RIGID GALVANIZED STEEL
RPVC	RIGID PVC (SCHEDULE 80)
SER	SERVICE ENTRANCE RATED
SPST	SINGLE POLE SINGLE THROW
TC	TIME CLOCK
TDR	TIME DELAY RELAY
TJB	TERMINAL JUNCTION BOX
TSP	TWISTED SHIELDED PAIR
TTB	TELEPHONE TERMINAL BOARD
TVSS	TRANSIENT VOLTAGE SURGE SUPPRESSER
TYP	TYPICAL
UH	UNIT HEATER
UNO	UNLESS NOTED OTHERWISE
V	VOLT
VA	VOLT AMPERE
VFD	VARIABLE FREQUENCY DRIVE
WG	PROVIDE PROTECTIVE WIRE GUARD
WP	WEATHER PROOF/NEMA 3R
XFMR	TRANSFORMER

GENERAL NOTES

1. COLOR CODE WIRES AS FOLLOWS:

CONDUCTORS	120/208V	120/240V	480/277V
PHASE A	BLACK	BLACK	BROWN
PHASE B	RED	RED	ORANGE
PHASE C	BLUE	BLUE	YELLOW
NEUTRAL	WHITE	WHITE	GRAY
GROUND	GREEN	GREEN	GREEN

2. ALL POWER JUNCTION BOXES AND ASSOCIATED COVERS TO BE MARKED WITH PANEL NAME AND CIRCUIT NUMBER WITH PERMANENT BLACK INK MARKER.
3. ALL WIRE SHALL BE STRANDED TYPE THHN/THWN, WIRE SIZE SHALL BE A MINIMUM OF #12 AWG Cu UNLESS NOTED OTHERWISE ON PLANS. WIRE SIZE SHALL BE A MINIMUM OF #10 AWG Cu FOR LENGTHS OF 100' OR MORE UNLESS NOTED OTHERWISE ON PLANS.
4. ELECTRICAL DEVICES AND LINEWORK ARE SHOWN BOLD FOR NEW, BOLD/DASHED FOR DEMO & RELOCATED AND MEDIUM/DASHED FOR EXISTING.
5. DIMENSIONED LENGTHS SHALL TAKE PRECEDENCE OVER SCALED LENGTHS.
6. COORDINATE WORK WITH ALL TRADES PRIOR TO INSTALLATION.
7. PROVIDE ACCURATE AS–BUILT DRAWINGS TO ENGINEER UPON PROJECT COMPLETION.
8. FURNISH AND INSTALL A COMPLETE ELECTRICAL SYSTEM AS DEPICTED FROM THE PLANS AND SPECIFICATIONS. COMPLETE AS NOTED OR IMPLIED, NOT LIMITED TO WHAT IS SHOWN.
9. ALL DRAWINGS ARE SCHEMATIC IN NATURE AND ALL APPURTENANCES NOT INDICATED TO MAKE A WORKING SYSTEM MUST BE INCLUDED IN THE CONTRACTORS BID.
10. THE CONTRACTOR IS RESPONSIBLE TO IDENTIFY CONFLICTS, INCONSISTENCIES, OR ITEMS WHERE DESIGN INTENT IS NOT CLEAR, IN WRITING TO THE ENGINEER PRIOR TO BID. BY SUBMITTING A BID ON THIS PROJECT, THE CONTRACTOR ACCEPTS THAT ALL ITEMS ARE UNDERSTOOD AND ACCURATELY DEPICT DESIGN INTENT. NO ADDITIONAL COST CAN BE RECOVERED (FOR DESIGN INTENT QUESTIONS/ISSUES) BY THIS CONTRACTOR ONCE BIDS ARE ACCEPTED.
11. ALL MOUNTING HEIGHTS OF EQUIPMENT SHALL MEET ADA REQUIREMENTS UNLESS OTHERWISE INDICATED.
12. MAINTAIN SAME WIRE SIZE FROM PANEL THROUGHOUT THE ENTIRE LENGTH OF THE CIRCUIT UNO.
13. COORDINATE ALL DEVICE/FIXTURE LOCATIONS AND SPECIFIC REQUIREMENTS WITH CIVIL / MECHANICAL TRADES PRIOR TO ROUGH–IN.
14. ALL TRENCHING, BACKFILL, COMPACTION, AND REPLACEMENT OF ASPHALT OR CONCRETE REQUIRED TO COMPLETE THIS CONTRACT SHALL BE INCLUDED IN THIS CONTRACTORS BID. IT SHALL BE REPLACED TO A CONDITION EQUAL TO THAT OF EXISTING CONDITIONS. SEE DETAILS 1 THROUGH 3, AND 5 ON SHEET D1.1 FOR TRENCHING DETAILS.
15. CONTRACTOR IS RESPONSIBLE TO REPAIR ANY DAMAGE CAUSED BY THIS CONTRACTOR TO NEW/EXISTING BUILDING SYSTEMS AT NO ADDITIONAL COST TO OWNER. RE: G1 THROUGH G8 FOR ADDITIONAL REQUIREMENTS.

MOUNTING HEIGHTS DETAIL

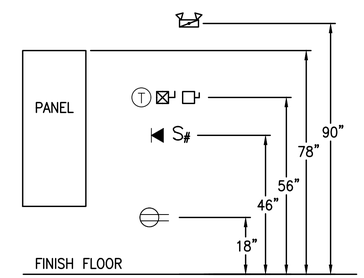

DESIGNED: B. ANDERSON CADD J. CHEEK TECH. REVIEW: B. ANDERSON DATE: 02/24/2022	SUB SHEET NO. E0.0	TITLE OF SHEET NOTES–DEFINITIONS LEGEND REHABILITATE ASH AND BUCKEYE WASTEWATER TREATMENT PLANTS SEQUOIA & KINGS CANYON NATIONAL PARKS	DRAWING NO. 102 / 177,507 PMIS/PKG NO. 317446 SHEET 88 OF 135

25/04/2022 15:42 MARIO GARCIA G:\CLIENTS\NPS\SEK\317446\DRAWINGS\ASH MOUNTAIN DWGS\ELEC\E0.0 NOTES–DEFINITIONS LEGEND.DWG

GENERAL NOTES

A. CONTRACTOR TO FIELD VERIFY FEED WIRES FROM TRANSFORMER TO NEW CONTROL BUILDING PANEL 'A' AND DEMO AS NEEDED TO UPSIZE THE WIRE TO MEET NEW FACILITY POWER DEMANDS.

B. CONTRACTOR TO COORDINATE DEMO OF METER/MAIN AT OLD CONTROL BUILDING WITH UTILITY.

KEYNOTES (#)

1. RETAIN AND PROTECT EXISTING METER/MAIN. FURNISH NEW FEEDER FROM THE 200A OUTPUT CIRCUIT BREAKER IN THE EXISTING POWER PEDESTAL. SEE SHEET E3.0 FOR ADDITIONAL DETAILS..
2. DISCONTINUE FEEDER AND LEAVE BURIED.
3. REMOVE AND RETURN TO OWNER: PROPANE TANK, GENERATOR, AND ATS. CARE IS TO BE TAKEN TO PROTECT THESE ITEMS FROM DAMAGE.
4. DEMO EXISTING MCC. FURNISH AND INSTALL NEW 12" X 14-3/4" PRECAST POLYMER CONCRETE JUNCTION BOX, OPEN BOTTOM WITH LID. INTERCEPT AND EXTEND EXISTING FEEDER THAT SERVED THE MCC FROM THIS POINT TO THE NEW PANEL 'A3'. FEEDER ORIGINATES IN PANEL 'A2'. TOP OF JUNCTION BOX TO BE AT GRADE LEVEL.
5. GROUND J-BOX TO NEW PANEL 'A' IN NEW CONTROL BUILDING. CONTRACTOR TO FIELD VERIFY THAT CONDUCTOR SIZE IS ADEQUATE TO FEED 100A PANEL.
6. INTERCEPT AND EXTEND FROM GROUND JUNCTION BOX TO NEW PANEL 'A3'. CONNECTING WITH NEW PANEL 'A2'. CONTRACTOR TO FIELD VERIFY CONDUCTOR SIZE IS ADEQUATE TO FEED 100A PANEL.
7. CONTRACTOR TO REPLACE PANEL AT HEADWORKS WITH NEW 100A PANEL 'A3'. COMMINUTOR, FLOWMETER, LIGHT AND RECEPTACLE ALSO TO BE REPLACED IN PLACE.
8. CONTRACTOR TO REPLACE PANELS IN OLD CONTROL BUILDING WITH NEW PANEL 'A2'.
9. DEMO EXISTING CONDUIT, WIRE AND CONNECTIONS OUT TO END OF EACH PIER.
10. RETAIN AND PROTECT EXISTING IN GROUND JUNCTION BOX.

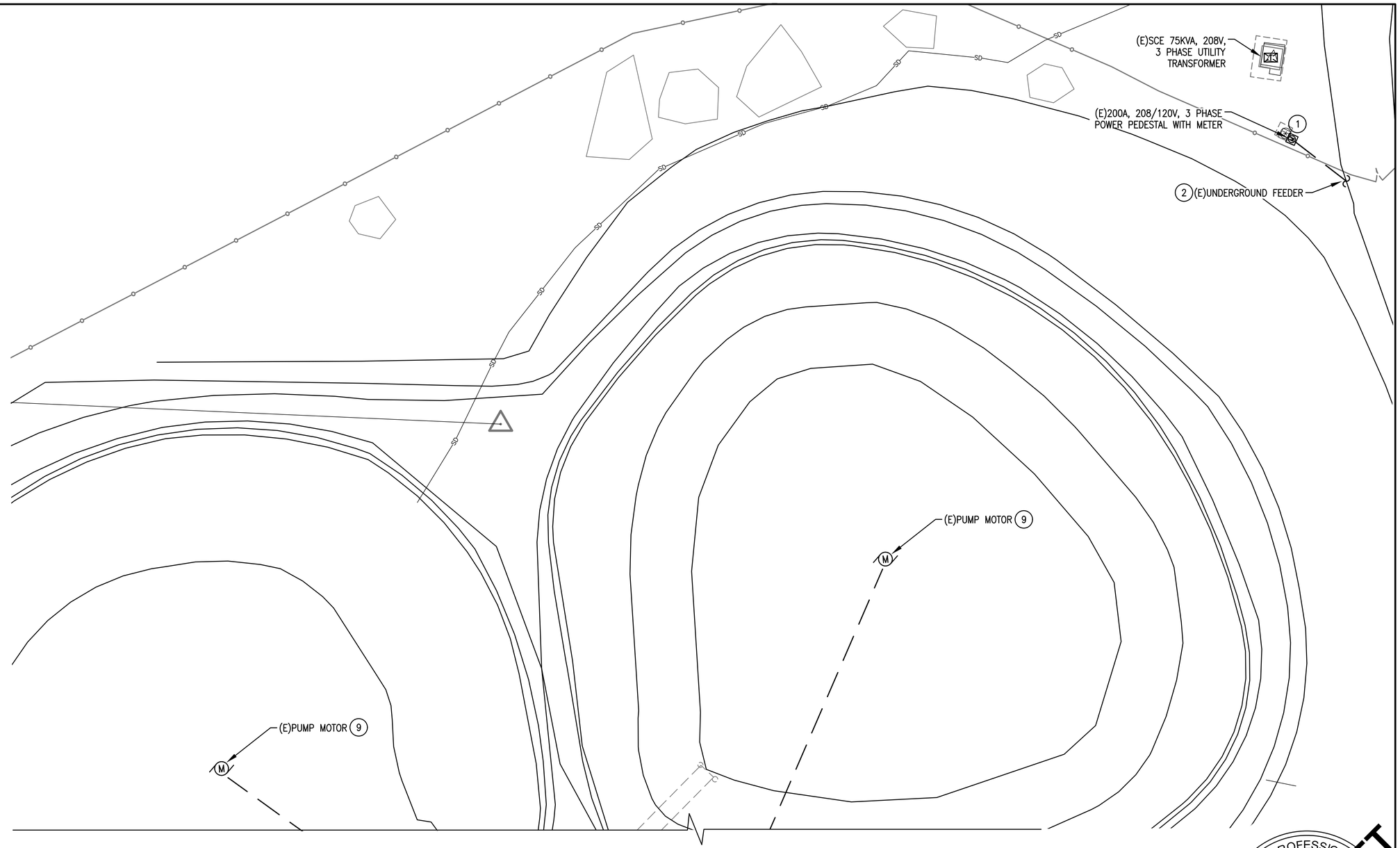

SEE SHEET E1.1 FOR CONTINUATION

20' 0 20' 40'
SCALE OF FEET

REGISTERED PROFESSIONAL ENGINEER
PHILO CARTER
2131
ELECTRICAL
STATE OF CALIFORNIA

100% DRAFT

PLAN VIEW – EXISTING ELECTRICAL SITE PLAN ASH MOUNTAIN WWTP

DESIGNED: B. ANDERSON CADD M. SMITH TECH. REVIEW: V. CARTER DATE: 04/14/2022	SUB SHEET NO. E1.0	TITLE OF SHEET EXISTING ELECTRICAL SITE PLAN–A REHABILITATE ASH AND BUCKEYE WASTEWATER TREATMENT PLANTS SEQUOIA & KINGS CANYON NATIONAL PARKS	DRAWING NO. 102/177,507 PMIS/PKG NO. 317446 SHEET 89 OF 135

27/04/2022 09:59 JENNIFER CHEEK G:\CLIENTS\NPS\SEK\317446\DRAWINGS\ASH MOUNTAIN DWGS\ELEC\E1.0 EXISTING ELECTRICAL SITE PLAN.DWG

GENERAL NOTES

A. CONTRACTOR TO FIELD VERIFY FEED WIRES FROM TRANSFORMER TO NEW CONTROL BUILDING PANEL 'A' AND DEMO AS NEEDED TO UPSIZE THE WIRE TO MEET NEW FACILITY POWER DEMANDS.

B. CONTRACTOR TO COORDINATE DEMO OF METER/MAIN AT OLD CONTROL BUILDING WITH UTILITY.

KEYNOTES (#)

1. RETAIN AND PROTECT EXISTING METER/MAIN. FURNISH NEW FEEDER FROM THE 200A OUTPUT CIRCUIT BREAKER IN THE EXISTING POWER PEDESTAL. SEE SHEET E3.0 FOR ADDITIONAL DETAILS..
2. DISCONTINUE FEEDER AND LEAVE BURIED.
3. REMOVE AND RETURN TO OWNER: PROPANE TANK, GENERATOR, AND ATS. CARE IS TO BE TAKEN TO PROTECT THESE ITEMS FROM DAMAGE.
4. DEMO EXISTING MCC. FURNISH AND INSTALL NEW 12" X 14-3/4" PRECAST POLYMER CONCRETE JUNCTION BOX, OPEN BOTTOM WITH LID. INTERCEPT AND EXTEND EXISTING FEEDER THAT SERVED THE MCC FROM THIS POINT TO THE NEW PANEL 'A3'. FEEDER ORIGINATES IN PANEL 'A2'. TOP OF JUNCTION BOX TO BE AT GRADE LEVEL.
5. GROUND J-BOX TO NEW PANEL 'A' IN NEW CONTROL BUILDING. CONTRACTOR TO FIELD VERIFY THAT CONDUCTOR SIZE IS ADEQUATE TO FEED 100A PANEL.
6. INTERCEPT AND EXTEND FROM GROUND JUNCTION BOX TO NEW PANEL 'A3'. CONNECTING WITH NEW PANEL 'A2'. CONTRACTOR TO FIELD VERIFY CONDUCTOR SIZE IS ADEQUATE TO FEED 100A PANEL.
7. CONTRACTOR TO REPLACE PANEL AT HEADWORKS WITH NEW 100A PANEL 'A3'. COMMINUTOR, FLOWMETER, LIGHT AND RECEPTACLE ALSO TO BE REPLACED IN PLACE.
8. CONTRACTOR TO REPLACE PANELS IN OLD CONTROL BUILDING WITH NEW PANEL 'A2'.
9. DEMO EXISTING CONDUIT, WIRE AND CONNECTIONS OUT TO END OF EACH PIER.
10. RETAIN AND PROTECT EXISTING IN GROUND JUNCTION BOX.

CONTINUED FROM E1.0

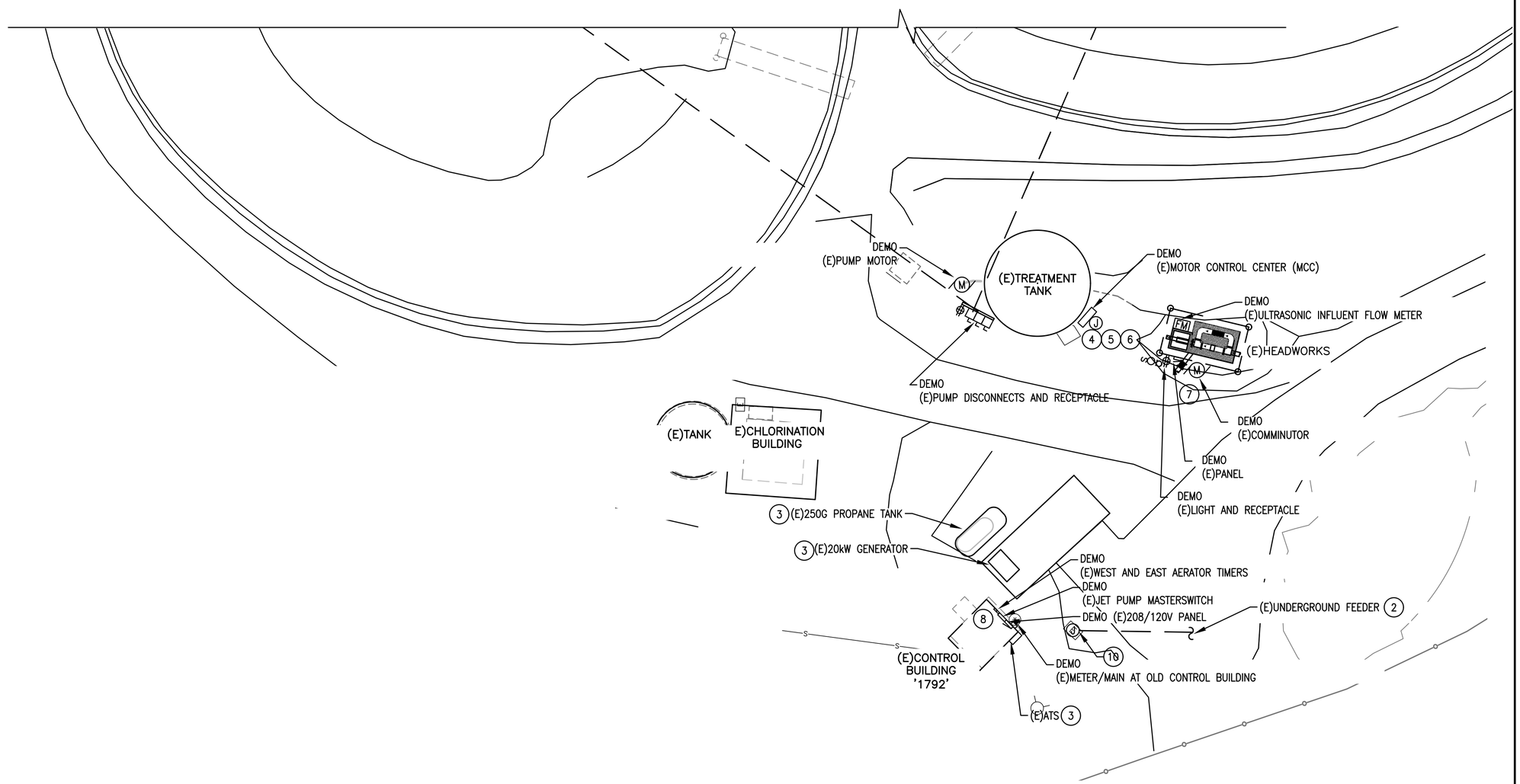

20' 0 20' 40'
SCALE OF FEET

REGISTERED PROFESSIONAL ENGINEER
PHILO CARTER
2431
ELECTRICAL
STATE OF CALIFORNIA

100% DRAFT

PLAN VIEW – EXISTING ELECTRICAL SITE PLAN ASH MOUNTAIN WWTP

DESIGNED: B. ANDERSON CADD M. SMITH TECH. REVIEW: V. CARTER DATE: 04/14/2022	SUB SHEET NO. E1.1	TITLE OF SHEET EXISTING ELECTRICAL SITE PLAN–B REHABILITATE ASH AND BUCKEYE WASTEWATER TREATMENT PLANTS SEQUOIA & KINGS CANYON NATIONAL PARKS	DRAWING NO. 102 / 177,507 PMIS/PKG NO. 317446 SHEET 90 OF 135

26/04/2022 15:09 MARIO GARCIA G:\CLIENTS\NPS\SEKI\317446\DRAWINGS\ASH MOUNTAIN DWGS\ELEC\E1.0 EXISTING ELECTRICAL SITE PLAN.DWG

KEY NOTES (#)

1. PROVIDE A 30A NEMA 3R DISCONNECT.
2. PROVIDE A NEMA 3R MOTOR RATED SWITCH.
3. PROVIDE A NEW 200A/3P DISCONNECT, SERVICE ENTRANCE RATED NEMA 3R ENCLOSURE.
4. PROVIDE 1" CONDUIT BACK TO READOUT IN CONTROL BUILDING. PROVIDE A 3/4"C WITH 3#12 TO PANEL 'A' FOR POWER.
5. PROVIDE 1" CONDUIT BACK TO READOUT IN CONTROL BUILDING. PROVIDE A 3/4"C WITH 3#12 TO PANEL 'A3' FOR POWER.
6. OUTDOOR LEVEL ALARM SYSTEM THAT MEETS THE FOLLOWING CRITERIA: PROVIDE SYSTEM WITH (2) NORMALLY CLOSED FLOAT SWITCHES. THE HIGH LEVEL FLOAT SWITCH WILL TURN ON A RED LIGHT WHEN THE TANK LEVEL EXCEEDS 80,000 GALLONS, THE SECOND FLOAT SWITCH IS THE OVERFLOW ALARM AND WILL TURN ON AN 85DB (MINIMUM) HORN WHEN THE TANK LEVEL EXCEEDS 95,000 GALLONS. FURNISH 1" PVC FROM TANK PENETRATIONS TO EACH FLOAT SWITCH AND THEN ON TO THE ALARM PANEL. ALARM PANEL WITH LIGHT AND HORN TO BE MOUNTED AT +10' AFG SO THAT THE LIGHT CAN BE SEEN FROM THE GENERAL'S HIGHWAY. FIELD VERIFY VISIBILITY PRIOR TO INSTALLATION.
7. FURNISH PVC CONDUIT FOR UNDERGROUND CONDUITS AND TRANSITION TO PVC COATED STEEL FLEX ABOVE GROUND.
8. AMBER STROBE LIGHT FOR NOTIFICATION PURPOSE OF WHEN THE GENERATOR IS OPERABLE. PROVIDE 3/4" C, WITH 2#12 BACK TO THE ATS LOCATED IN THE CONTROL ROOM. CONNECT TO ATS FOR GENERATOR RUN INDICATOR. MOUNT AT +10' AFG SO THAT LIGHT IS VISIBLE FROM THE GENERAL'S HIGHWAY. FIELD VERIFY VISIBILITY PRIOR TO INSTALLATION.

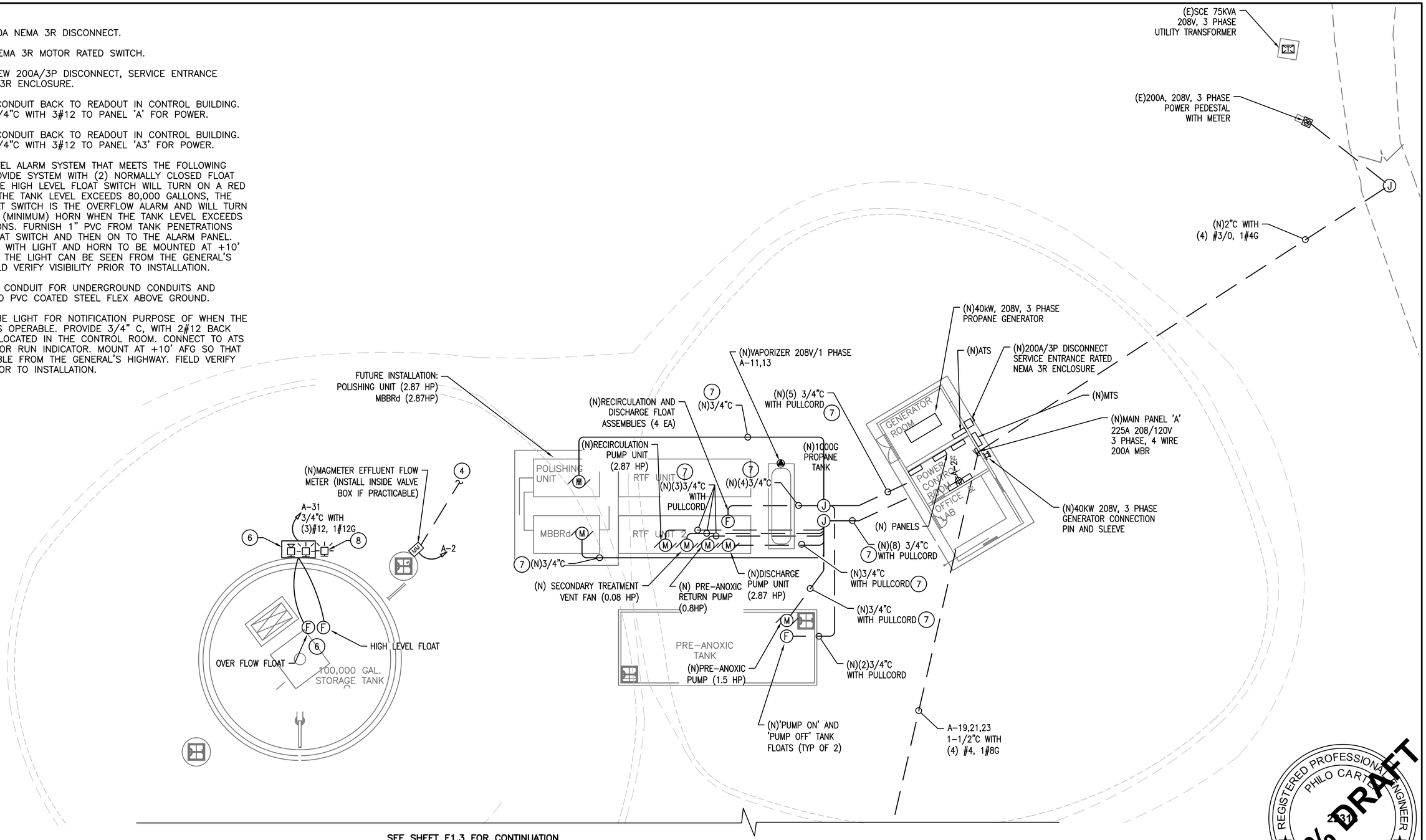

SEE SHEET E1.3 FOR CONTINUATION

10' 0 10' 20'
SCALE OF FEET

PLAN VIEW – EXISTING ELECTRICAL SITE PLAN ASH MOUNTAIN WWTP

DESIGNED: B. ANDERSON	SUB SHEET NO.	TITLE OF SHEET	DRAWING NO.
CADD M. SMITH	E1.2	NEW ELECTRICAL SITE PLAN–A	102 / 177,507
TECH. REVIEW: V. CARTER		REHABILITATE ASH AND BUCKEYE WASTEWATER TREATMENT PLANTS	PMIS/PKG NO. 317446
DATE: 04/14/2022		SEQUOIA & KINGS CANYON NATIONAL PARKS	SHEET 91 OF 135

26/04/2022 15:09 MARIO GARCIA G:\CLIENTS\WPS\SEK\317446\DRAWINGS\ASH MOUNTAIN DWGS\ELEC\E1.1 NEW ELECTRICAL SITE PLAN.DWG

KEY NOTES (#)

1. PROVIDE A 30A NEMA 3R DISCONNECT.
2. PROVIDE A NEMA 3R MOTOR RATED SWITCH.
3. PROVIDE A NEW 200A/3P DISCONNECT, SERVICE ENTRANCE RATED NEMA 3R ENCLOSURE.
4. PROVIDE 1" CONDUIT BACK TO READOUT IN CONTROL BUILDING. PROVIDE A 3/4"C WITH 3#12 TO PANEL 'A' FOR POWER.
5. PROVIDE 1" CONDUIT BACK TO READOUT IN CONTROL BUILDING. PROVIDE A 3/4"C WITH 3#12 TO PANEL 'A3' FOR POWER.
6. OUTDOOR LEVEL ALARM SYSTEM THAT MEETS THE FOLLOWING CRITERIA: PROVIDE SYSTEM WITH (2) NORMALLY CLOSED FLOAT SWITCHES. THE HIGH LEVEL FLOAT SWITCH WILL TURN ON A RED LIGHT WHEN THE TANK LEVEL EXCEEDS 80,000 GALLONS, THE SECOND FLOAT SWITCH IS THE OVERFLOW ALARM AND WILL TURN ON AN 85DB (MINIMUM) HORN WHEN THE TANK LEVEL EXCEEDS 95,000 GALLONS. FURNISH 1" PVC FROM TANK PENETRATIONS TO EACH FLOAT SWITCH AND THEN ON TO THE ALARM PANEL. ALARM PANEL WITH LIGHT AND HORN TO BE MOUNTED AT +10' AFG SO THAT THE LIGHT CAN BE SEEN FROM THE GENERAL'S HIGHWAY. FIELD VERIFY VISIBILITY PRIOR TO INSTALLATION.
7. FURNISH PVC CONDUIT FOR UNDERGROUND CONDUITS AND TRANSITION TO PVC COATED STEEL FLEX ABOVE GROUND.
8. AMBER STROBE LIGHT FOR NOTIFICATION PURPOSE OF WHEN THE GENERATOR IS OPERABLE. PROVIDE 3/4" C, WITH 2#12 BACK TO THE ATS LOCATED IN THE CONTROL ROOM. CONNECT TO ATS FOR GENERATOR RUN INDICATOR. MOUNT AT +10' AFG SO THAT LIGHT IS VISIBLE FROM THE GENERAL'S HIGHWAY. FIELD VERIFY VISIBILITY PRIOR TO INSTALLATION.

CONTINUED FROM E1.2

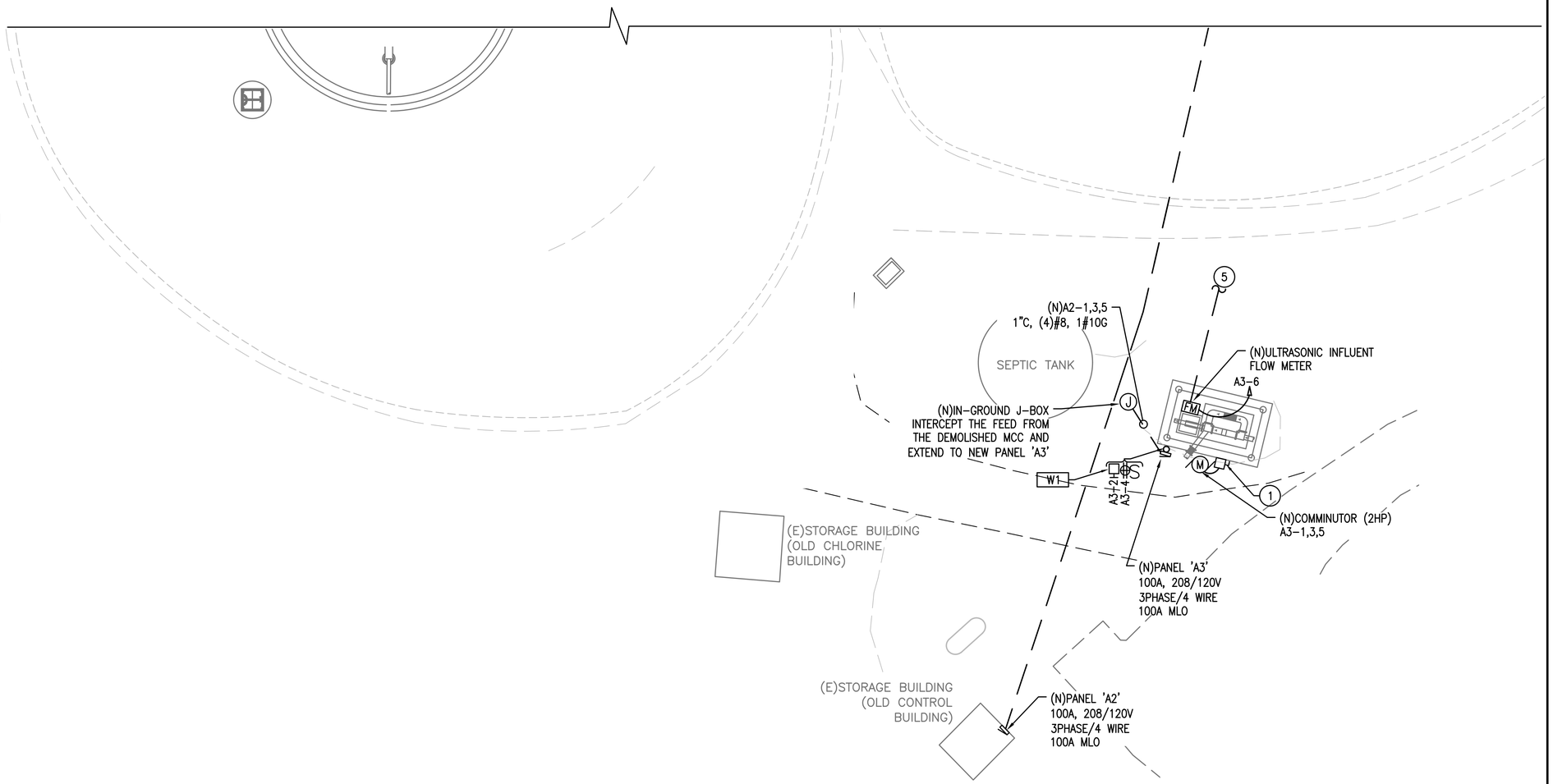

PLAN VIEW – EXISTING ELECTRICAL SITE PLAN ASH MOUNTAIN WWTP

10' 0 10' 20'
SCALE OF FEET

REGISTERED PROFESSIONAL ENGINEER
PHILO CARTER
2231
ELECTRICAL
STATE OF CALIFORNIA
100% DRAFT

DESIGNED: B. ANDERSON CADD M. SMITH TECH. REVIEW: V. CARTER DATE: 04/14/2022	SUB SHEET NO. E1.3	TITLE OF SHEET NEW ELECTRICAL SITE PLAN–B REHABILITATE ASH AND BUCKEYE WASTEWATER TREATMENT PLANTS SEQUOIA & KINGS CANYON NATIONAL PARKS	DRAWING NO. 102 / 177,507 PMIS/PKG NO. 317446 SHEET 92 OF 135

26/04/2022 15:09 MARIO GARCIA G:\CLIENTS\NPS\SEK\317446\DRAWINGS\ASH MOUNTAIN DWGS\ELEC\E1.1 NEW ELECTRICAL SITE PLAN.DWG

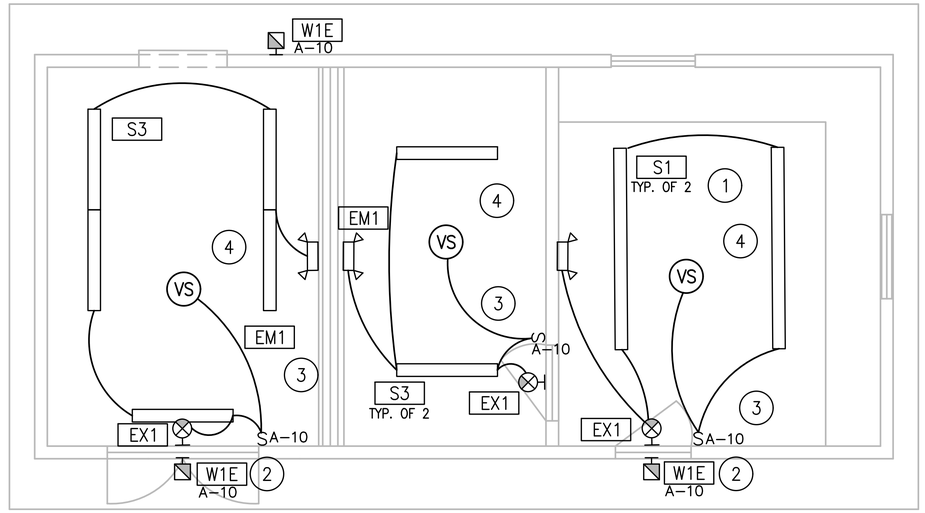

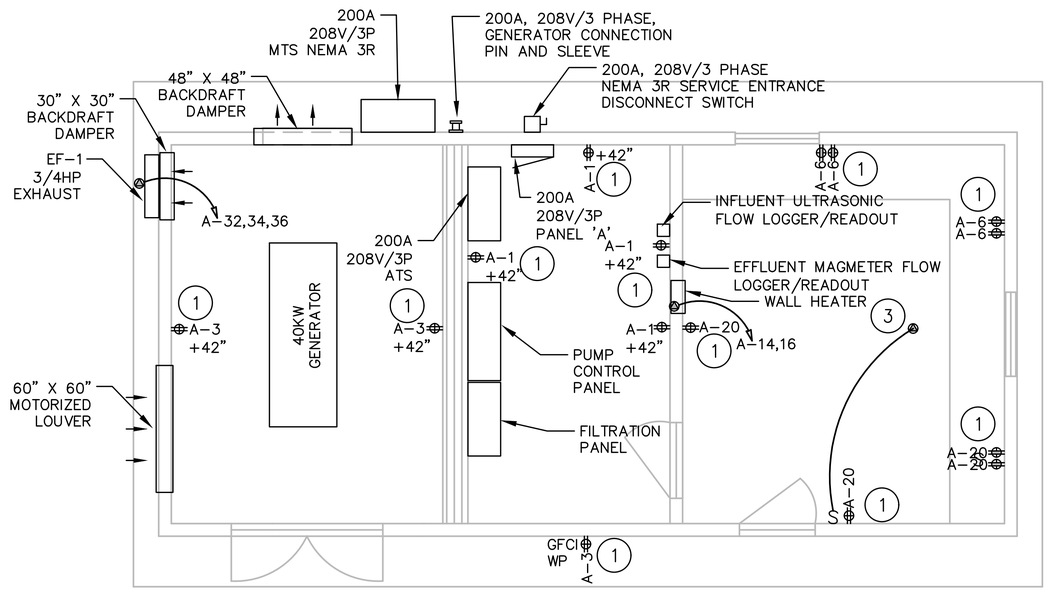

PLAN VIEW – ASH MOUNTAIN WWTP CONTROL BUILDING POWER AND LIGHTING PLANS

POWER GENERAL NOTES

A. JUNCTION BOXES SHALLBE WEATHER PROOF (wp) AND SIZED AS REQUIRED, BUT NO SMALLER THAN 6" X6" X 4".

B. EACH BRANCH CIRCUIT HOMERUN SHALL HAVE NO MORE THAN THREE CIRCUITS. EACH BRANCH CIRCUIT HOMERUN SHALL HAVE A SEPARATE GREEN INSULATED EQUIPMENT GROUNDING CONDUCTOR.

C. MULTI-GANG BACKBOXES FOR DIFFERENT VOLTAGES AND TYPES OF EMERGENCY NORMAL BRANCH WIRING DEVICES SHALL HAVE DIVIDERS BETWEEN DEVICES.

POWER KEYED NOTES (#)

1. ALL OUTLETS IN CONTROL BUILDING SHALL BE GFCI.
2. INTERLOCK INTAKE LOUVER WITH GENERATOR ATS SO THAT LOUVER OPENS UPON START SIGNAL TO THE GENERATOR. ADDITIONALLY, INTERLOCK WITH EF-1 IN THIS ROOM.
3. NEW 100CFM EXHAUST FAN.

LIGHTING GENERAL NOTES

A. ALL FINAL LOCATIONS AND ARRANGEMENTS OF LIGHTING FIXTURES SHALL BE VERIFIED AND APPROVED BEFORE INSTALLATION.

B. MULTI-GANG BACKBOXES FOR DIFFERENT VOLTAGES AND TYPES OF EMERGENCY AND NORMAL BRANCH WIRING DEVICES SHALL HAVE DIVIDERS BETWEEN DEVICES.

C. PROVIDE UNSWITCHED LEG OF LOCAL LIGHTING CIRCUIT TO EMERGENCY/EXIT FIXTURE FOR CONSTANT CHARGE TO INTERNAL BATTERY.

LIGHTING KEYED NOTES (#)

1. LIGHT FIXTURES IN THIS AREA TO BE ENERGY EFFICIENT LED STRIP LIGHTS WITH INTEGRAL OCCUPANCY SENSOR (LITHONIA: CLX-L96-8000LM-SEF-RDL-MVOLT-EZ1-35K-80CRI-E10WLCP-SPD-MSD7-WH OR EQUIVALENT) ELECTRICAL CONTRACTOR IS TO ACCOUNT/PROVIDE FOR A FULLY OPERATIONAL INSTALLATION.
2. EXTERIOR BULIDING MOUNTED FIXTURES TO BE EVERGY EFFICIENT LED FIXTURE WITH A DUSK TO DAWN PHOTOCELL. SHADED FIXTURE INDICATES BATTERY BACKUP [E20WC] (LITHONIA: DSXW1 LED-10C-700-30K-T2M -MVOLT-PE-[E20WC]-DDBXD OR EQUIVALENT).
3. SWITCH PROVIDED FOR MANUAL LIGHTING OVERRIDE ON/OFF.
4. PROVIDE CEILING MOUNTED VACANCY SENSOR FOR EACH ROOM (COOPER: VAC-DT-0501-R OR EQUIVALENT).

3' 0 3' 6'

REGISTERED PROFESSIONAL ENGINEER
PHILO CARTER
ELECTRICAL
STATE OF CALIFORNIA
2-31
100% DRAFT

DESIGNED: B. ANDERSON CADD M. SMITH TECH. REVIEW: V. CARTER DATE: 04/14/2022	SUB SHEET NO. E2.0	TITLE OF SHEET CONTROL BUILDING ELECTRICAL PLAN REHABILITATE ASH AND BUCKEYE WASTEWATER TREATMENT PLANTS SEQUOIA & KINGS CANYON NATIONAL PARKS	DRAWING NO. 102 / 177,507 PMIS/PKG NO. 317446 SHEET 93 OF 135

27/04/2022 10:00 JENNIFER CHEEK G:\CLIENTS\NPS\SEK(\317446\DRAWINGS\ASH MOUNTAIN DWGS\ELEC\E2.0 CONTROL BUILDING ELECTRICAL PLAN.DWG

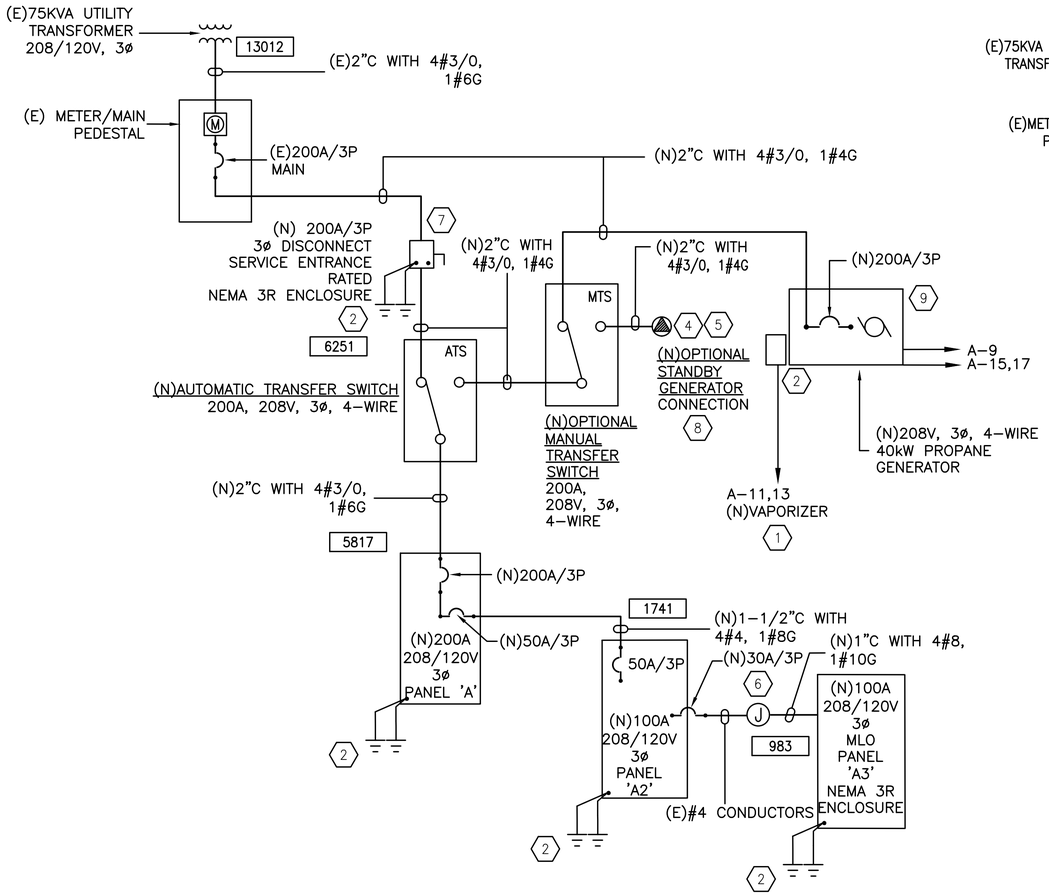

ASH MOUNTAIN NEW ONE-LINE DIAGRAM

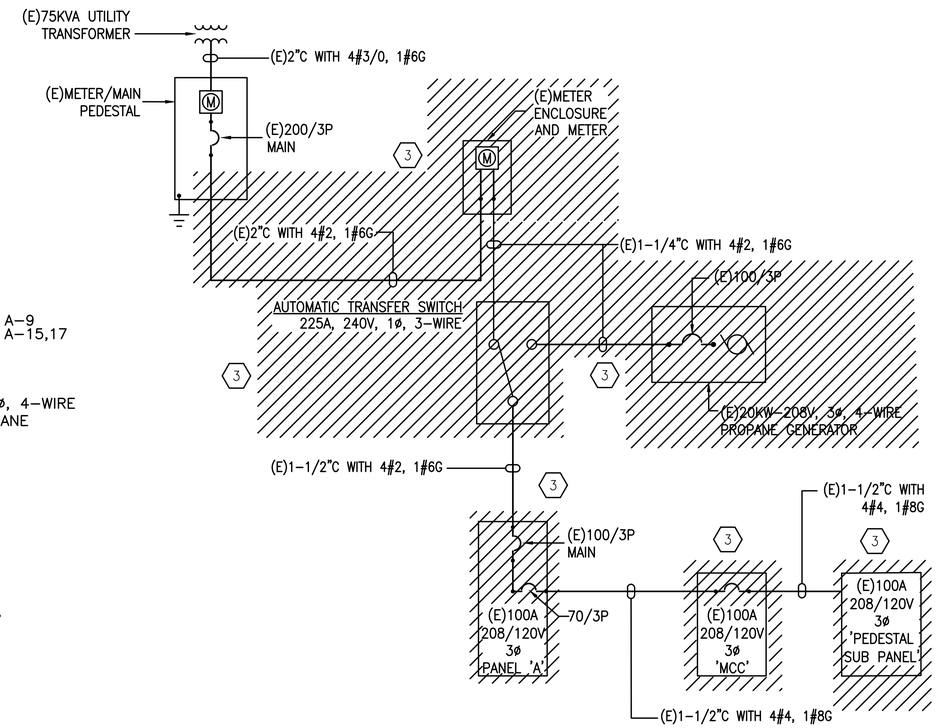

ASH MOUNTAIN EXISTING ONE-LINE DIAGRAM

KEY NOTES (XX)

1. FURNISH AND INSTALL NEW PROPANE VAPORIZER SIZED AS REQUIRED FOR SPECIFIC GENERATOR THAT IS SELECTED (BY THIS CONTRACTOR).
2. GROUND PER NEC ARTICLE 250.
3. DISCONNECT AND REMOVE EXISTING ELECTRICAL CONNECTIONS.
4. GROUND PER NEC ARTICLE 702.11(B).
5. PROVIDE PLACARD THAT STATES: WARNING: FOR CONNECTION TO NON-SEPARATELY DERIVED (FLOATING NEUTRAL) SYSTEM ONLY.
6. FURNISH/INSTALL NEW IN-GROUND JUNCTION BOX WHERE EXISTING 'MCC' CURRENTLY RESIDES. RETAIN FEEDER FROM EXISTING CONTROL BUILDING PANEL 'A' AND SPLICE IN THIS JUNCTION BOX IN ORDER TO EXTEND FEED TO NEW SUB-PANEL 'A3' AT THE HEADWORKS.
7. INSTALL DISCONNECT ON THE OUTSIDE OF CONTROL BUILDING NEAREST THE ATS.
8. 208V, 3ø WYE-CONNECTED GENERATOR PIN AND SLEEVE CONNECTION WITH INTEGRAL INTERLOCKING DISCONNECT.
9. PROVIDE SIGNAGE PER NEC ARTICLE 702.7(A) & (B).

VOLTAGE DROP AT PANELBOARDS

PANEL	VOLTAGE		CONNECTED LOAD	WIRE GAUGE	WIRE MATERIAL	WIRE RESISTANCE	DISTANCE (Feet)	VDROP	% VDROP	TOTA %VDROP
MTR MAIN - A	208	3	108	3/0	CU	0.0797	139	2.07	1.00	1.00
GEN - A	208	3	108	3/0	CU	0.0797	139	2.07	1.00	1.00
A - A2	208	3	14	4	CU	0.321	185	1.44	0.69	0.69
A2 - A3	208	3	11	8	CU	0.809	83	1.28	0.62	0.62

ASH MOUNTAIN VOLTAGE DROP CALCULATIONS

DESIGNED: B. ANDERSON CADD M. SMITH TECH. REVIEW: V. CARTER DATE: 04/14/2022	SUB SHEET NO. E3.0	TITLE OF SHEET ASH MOUNTAIN WWTP ONE-LINE DIAGRAM REHABILITATE ASH AND BUCKEYE WASTEWATER TREATMENT PLANTS SEQUOIA & KINGS CANYON NATIONAL PARKS	DRAWING NO. 102 / 177,507 PMIS/PKG NO. 317446 SHEET 94 OF 135

26/04/2022 10:46 MARIO GARCIA G:\CLIENTS\NPS\SEKI\317446\DRAWINGS\ASH MOUNTAIN DWGS\ELEC\E3.0 ASH MTN WWTP ONE-LINE DIAGRAM.DWG

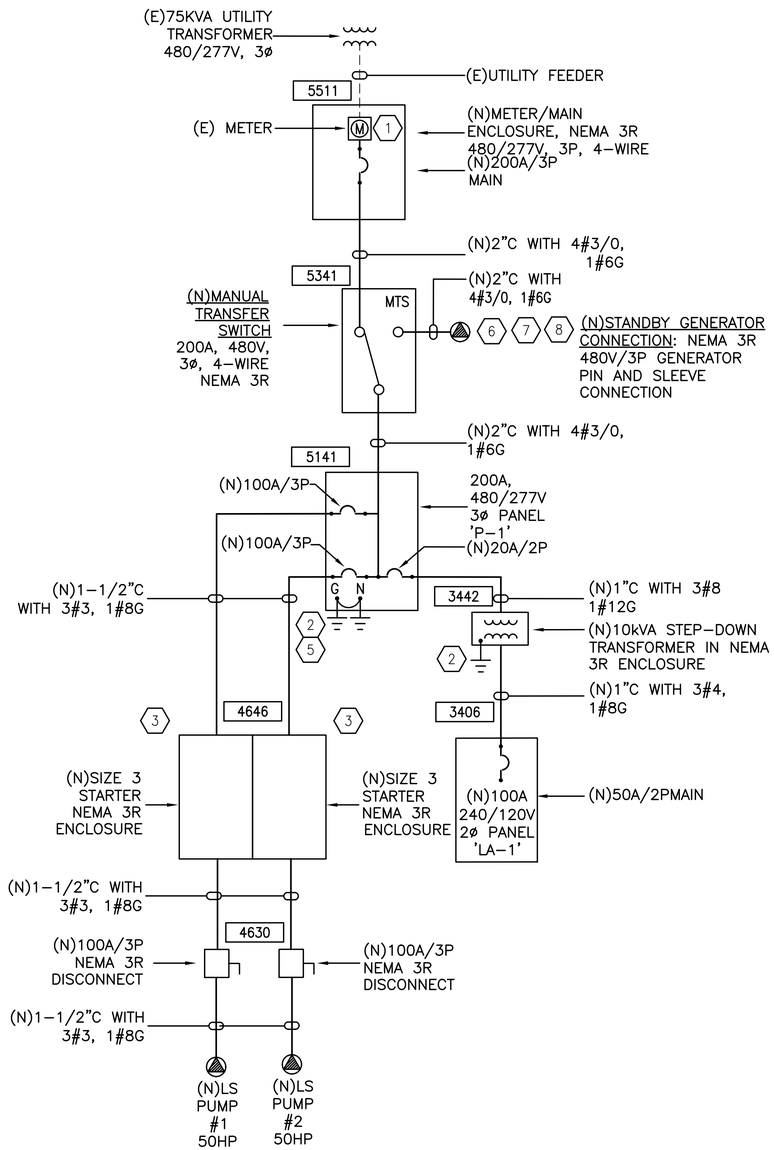

ASH MOUNTAIN LIFT STATION NEW ONE-LINE DIAGRAM

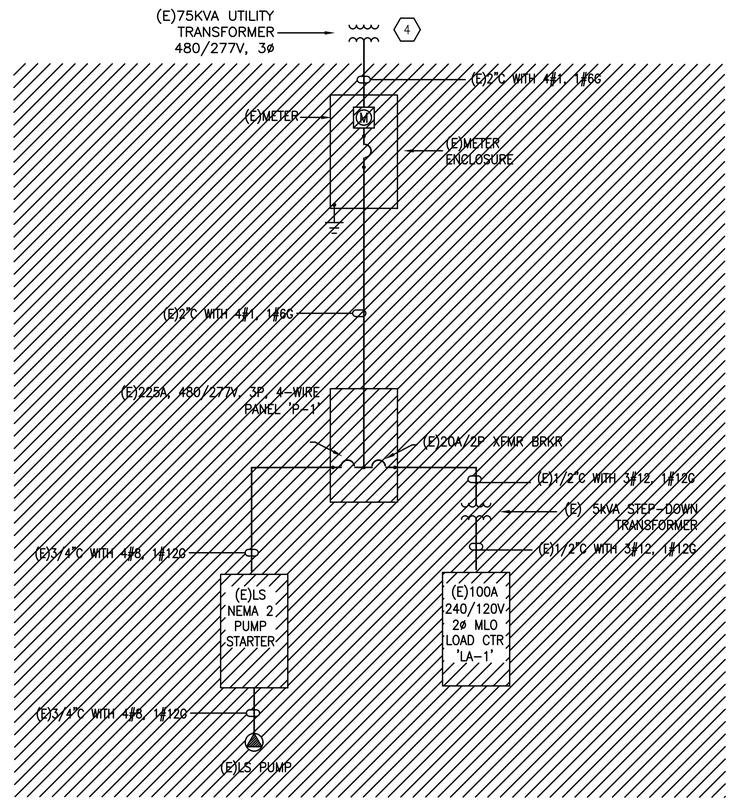

ASH MOUNTAIN LIFT STATION DEMOLITION ONE-LINE PLAN

VOLTAGE DROP AT PANELBOARDS

PANEL	VOLTAGE		CONNECTED LOAD	WIRE GAUGE	WIRE MATERIAL	WIRE RESISTANCE	DISTANCE (Feet)	VDROP %	VDROP %	TOTA VDROP
MTR Main - MTS	480	3	149	3/0	CU	0.0797	22	0.45	0.09	0.09
ATS - PNL M	480	3	149	3/0	CU	0.0797	12	0.25	0.05	0.05
M-Starters	480	3	130	3	CU	0.201	12	0.54	0.11	0.11
M-10kVA XFMR	480	3	9	8	CU	0.809	10	0.13	0.03	0.03
XFMR - PNL LA-1	240	3	9	4	CU	0.321	5	0.03	0.01	0.01

ASH MOUNTAIN LIFT STATION VOLTAGE DROP CALCULATIONS

GENERAL NOTES

A. COORDINATE ALL ASPECTS OF THE UTILITY COMPANY REQUIREMENTS WITH REGARD TO METERING, AND SPECIFIC GEAR REQUIREMENTS PRIOR TO ORDERING AND OR INSTALLATION.

KEY NOTES (XX)

1. METER MAIN ENCLOSURE IS TO BE FURNISHED AND INSTALLED BY THIS CONTRACTOR. COORDINATE METER REPLACEMENT WITH SCE.
2. GROUND PER NEC ARTICLE 250.
3. NEW SIZE 3 NEMA 3R STARTER, WITH HOA, GREEN RUN LIGHT, RED TROUBLE LIGHT, AND PUMP RUNTIME METER.
4. DISCONNECT AND REMOVE EXISTING ELECTRICAL CONNECTIONS. DO NOT DISCONNECT OR DAMAGE METERS OR OTHER UTILITY EQUIPMENT. COORDINATE DEMOLITION AND CONSTRUCTION WITH UTILITY.
5. ENSURE THAT (2) GROUND RODS ARE FURNISHED/INSTALLED AND PROVIDE GROUND AND NEUTRAL BOND AT THIS POINT (SERVICE ENTRANCE) PER NEC ARTICLE 250.
6. GROUND PER NEC ARTICLE 702.11(B).
7. PROVIDE PLACARD THAT STATES: WARNING: FOR CONNECTION TO NON-SEPARATELY DERIVED (FLOATING NEUTRAL) SYSTEM ONLY.

DESIGNED: B. ANDERSON	SUB SHEET NO.	TITLE OF SHEET	DRAWING NO.
CADD M. SMITH	E3.1	ONE-LINE DIAGRAM FOR LIFT STATION	102 / 177,507
TECH. REVIEW: V. CARTER		REHABILITATE ASH AND BUCKEYE WASTEWATER TREATMENT PLANTS	PMIS/PKG NO. 317446
DATE: 04/14/2022		SEQUOIA & KINGS CANYON NATIONAL PARKS	SHEET 95 OF 135

26/04/2022 13:52 MARIO GARCIA G:\CLIENTS\NPS\SEKI\317446\DRAWINGS\ASH MOUNTAIN DWGS\ELEC\E3.1 PUMP HOUSE ONE-LINE DIAGRAM.DWG

PANEL: A

PANEL: A | **PROJECT:** ASH MOUNTAIN WWTP REHABILITATION
VOLTAGE: 208/120V | **PHASE:** 3 | **WIRE:** 4 | **AMPERE RATING:** 200A | **SC RATING:** 10000 | **MAIN:** 200A MAIN BREAKER
ENTRY: | **MOUNTING:** SURFACE

LOADS:

	Amps	VA
PHASE A:	101	12148
PHASE B:	102	12280
PHASE C:	99	11906
TOTAL:		36334

LOAD TYPES: 1 = LIGHTING; 2 = RECEPTACLES; 3 = MISC; 4 = MOTOR; 5 = KITCHEN

REMARKS:
NEW COMMERCIAL BOLT-ON CIRCUIT BREAKER PANELBOARD
ALL RECEPTACLES FOR THIS BUILDING MUST BE GFCI

LOAD (VA)	LOAD SERVED	NOTE	LOAD TYPE	AMPS/ POLES		CKT NO	PHASE	CKT NO	AMPS/ POLES		LOAD TYPE	NOTE	LOAD SERVED	LOAD (VA)
540	REC - CONTROL ROOM (GFCI)	N	2	20	1	1	A	2	20	1	4	N	EFFLUENT FLOW METER	190
360	REC - GEN ROOM (GFCI)	N	2	20	1	3	B	4	20	1	4	N	BLDG EXHAUST FAN GEN ROOM	800
84	LTG - CONTROL ROOM	N	1	20	1	5	C	6	20	1	2	N	REC - OFFICE & LAB	1440
210	LTG - GEN ROOM	N	1	20	1	7	A	8	20	1	2	N	REC - EXTERIOR WALLS (GFCI)	180
350	GENERATOR BLOCK HEATER	N	3	20	1	9	B	10	20	1	1	N	LTG - OFFICE & LAB	142
1200	GENERATOR VAPORIZER	N	3	20	2	11	C	12	20	1	1	N	LTG - EXTERIOR BLDG LIGHTS	54
1200	--	–	3	–	–	13	A	14	20	2	3	N	WALL HEATER	1500
800	GENERATOR BATTERY CHARGER	N	3	20	2	15	B	16	20	–	3	–	--	1500
800	--	–	3	–	–	17	C	18	20	1		N	SPARE	
2208	PANEL A2	N	3	50	1	19	A	20	30	1	4	N	PUMP CONTROLLER PANEL FOR RTF	3480
2208	--	–	3	–	–	21	B	22	–	–	4	–	--	3480
2208	--	–	3	–	–	23	C	24	–	–	4	–	--	3480
1320	POLISHING UNIT (FUTURE INSTALL)	N	4	20	1	25	A	26	20	1	4	N	MBBRd (FUTURE INSTALL)	1320
1320	--	–	4	–	–	27	B	28	–	–	4	–	--	1320
1320	--	–	4	–	–	29	C	30	–	–	4	–	--	1320
	SPARE	N		20	1	31	A	32	20	1			SPARE	
	SPARE	N		20	1	33	B	34	20	1			SPARE	
	SPARE	N		20	1	35	C	36	20	1			SPARE	
	SPACE ONLY					37	A	38					SPACE ONLY	
	SPACE ONLY					39	B	40					SPACE ONLY	
	SPACE ONLY					41	C	42					SPACE ONLY	

LOADING BY TYPE			CONNECTED	NEC CODE	DEMAND FACTOR	DEMAND
LIGHTING			490 VA	210-19	125%	613 VA
RECEPTACLES			2520 VA	220-44	10kVA @ 100%, ELSE @ 50%	2520 VA
MISC.			13974 VA	220-60	100%	13974 VA
MOTOR	LARGEST MOT.:	10440	19350 VA	220-50	100% + LARGEST x 25%	21960 VA
KITCHEN	# OF KIT. UNITS:		0 VA	220-56		0 VA
TOTAL			101 A			108 A

NOTES:
E - DENOTES EXISTING BREAKER TO REMAIN.
N - DENOTES NEW BREAKER REQUIRED.
R - DENOTES TO REUSE EXISTING BREAKER.

ASH MOUNTAIL WWTP NEW PANEL SCHEDULES

PANELBOARD SCHEDULE

PANEL: A2 | **PROJECT:** ASH MOUNTAIN WWTP REHABILITATION
VOLTAGE: 208/120V | **PHASE:** 3 | **WIRE:** 4 | **AMPERE RATING:** 100A | **SC RATING:** 10000 | **MAIN:** 50A MAIN BREAKER
ENTRY: | **MOUNTING:** SURFACE

LOADS:

	Amps	VA
PHASE A:	12	1477
PHASE B:	14	1726
PHASE C:	15	1837
TOTAL:		5040

LOAD TYPES: 1 = LIGHTING; 2 = RECEPTACLES; 3 = MISC; 4 = MOTOR; 5 = KITCHEN

REMARKS:
NEW COMMERCIAL BOLT-ON CIRCUIT BREAKER PANELBOARD.
PROVIDES POWER TO LOAD CENTER 'A3' AND OLD CHLORINATION BUILDING

LOAD (VA)	LOAD SERVED	NOTES	LOAD TYPE	AMPS/ POLES		CKT NO	PHASE	CKT NO	AMPS/ POLES		LOAD TYPE	NOTE	LOAD SERVED	LOAD (VA)
1366	PANEL A3		3	30	3	1	A	2	20	1	1		LTG - BUILDING 1782	111
1366	---		3	-	–	3	B	4	20	1	2		REC - BUILDING 1782 WALL OUTLET	360
1366	---		3	-	–	5	C	6	20	1	3		REC-LTG: CHLORINATION BUILDING	471
	SPARE			20	1	7	A	8	20	1			SPARE	
	SPARE			20	1	9	B	10	20	1			SPARE	
	SPARE			20	1	11	C	12	20	1			SPARE	
	SPACE ONLY					13	A	14					SPACE ONLY	
	SPACE ONLY					15	B	16					SPACE ONLY	
	SPACE ONLY					17	C	18					SPACE ONLY	

LOADING BY TYPE			CONNECTED	NEC CODE	DEMAND FACTOR	DEMAND
LIGHTING			111 VA	210-19	125%	139 VA
RECEPTACLES			360 VA	220-44	10kVA @ 100%, ELSE @ 50%	360 VA
MISC.			4569 VA	220-60	100%	4569 VA
MOTOR	LARGEST MOT.:		0 VA	220-50	100% + LARGEST x 25%	0 VA
KITCHEN	# OF KIT. UNITS:		0 VA	220-56		0 VA
TOTAL			14 A			14 A

NOTES:

PANELBOARD SCHEDULE

PANEL: A3 | **PROJECT:** ASH MOUNTAIN WWTP REHABILITATION
VOLTAGE: 208/120V | **PHASE:** 3 | **WIRE:** 4 | **AMPERE RATING:** 100A | **SC RATING:** 10000 | **MAIN:** 30A MAIN BREAKER
ENTRY: | **MOUNTING:** SURFACE

LOADS:

	Amps	VA
PHASE A:	8	996
PHASE B:	9	1116
PHASE C:	9	1126
TOTAL:		3238

LOAD TYPES: 1 = LIGHTING; 2 = RECEPTACLES; 3 = MISC; 4 = MOTOR; 5 = KITCHEN

REMARKS:
NEW COMMERCIAL BOLT-ON CIRCUIT BREAKER PANELBOARD.
INSTALLED AT HEADWORKS

LOAD (VA)	LOAD SERVED	NOTE	LOAD TYPE	AMPS/ POLES		CKT NO	PHASE	CKT NO	AMPS/ POLES		LOAD TYPE	NOTE	LOAD SERVED	LOAD (VA)
936	GRINDER/COMMINUTOR		4	20	3	1	A	2	20	1	1		LT - OVERHEAD LIGHT	60
936	--		4	–	–	3	B	4	20	1	2		REC	180
936	--		4	–	–	5	C	6	20	1	3		INFLUENT FLOW METER	190
	SPARE			20	1	7	A	8	20				SPARE	
	SPACE ONLY				1	9	B	10	20				SPARE	
	SPACE ONLY				2	11	C	12					SPACE ONLY	
	SPACE ONLY					13	A	14					SPACE ONLY	
	SPACE ONLY					15	B	16					SPACE ONLY	
	SPACE ONLY					17	C	18					SPACE ONLY	

LOADING BY TYPE			CONNECTED	EC CODE	DEMAND FACTOR	DEMAND
LIGHTING			60 VA	210-19	125%	75 VA
RECEPTACLES			180 VA	220-44	10kVA @ 100%, ELSE @ 50%	180 VA
MISC.			190 VA	220-60	100%	190 VA
MOTOR	LARGEST MOT.:	2808	2808 VA	220-50	100% + LARGEST x 25%	3510 VA
KITCHEN	# OF KIT. UNITS:		0 VA	220-56		0 VA
TOTAL			9 A			11 A

NOTES:

LIGHT FIXTURE SCHEDULE

TYPE	MANUFACTURER	PART NUMBER	LAMP SOURCE	INPUT WATTAGE	VOLTAGE	MOUNTING	NOTES
EM1	LITHONIA	ELM2L M12	LED	1	120/277V	WALL	3
EX1	LITHONIA	LHQM-LED-G-HO RO-SD	LED	4.3	120/277V	CEILING	3
S1	LITHONIA	CLX-L96-8000LM-SEF-RDL-MVOLT-EZ1-35K-80CRI-MSD7-WH	LED	70.8	MVOLT	SURFACE	
S3	LITHONIA	CSVT-L48-5000LM-MVOLT-40K-80CRI	LED	42	MVOLT	SURFACE	
W1	LITHONIA	DSXW1 LED-10C-700-30K-T2M-MVOLT-PE-DDBXD	LED	27	MVOLT	WALL	3
W1E	LITHONIA	DSXW1 LED-10C-700-30K-T2M-MVOLT-PE-E20WC-DDBXD	LED	27	MVOLT	WALL	3

General Notes:
1. CONTRACTOR RESPONSIBLE FOR SUPPLYING ALL ACCESSORIES AND EXTRAS FOR A COMPLETE INSTALL.
2. COORDINATE FINISH WITH ARCHITECT.
3. PROVIDE EMERGENCY BATTERY BACKED LED DRIVER FOR SHADED FIXTURES ON LIGHTING PLAN.

ASH MOUNTAIL WWTP LIGHT FIXTURE SCHEDULE

REGISTERED PROFESSIONAL ENGINEER
PHILO CARTER
2131
ELECTRICAL
STATE OF CALIFORNIA
100% DRAFT

DESIGNED: B. ANDERSON CADD M. SMITH TECH. REVIEW: V. CARTER DATE: 04/14/2022	SUB SHEET NO. E3.2	TITLE OF SHEET ASH MTN WWTP SCHEDULES REHABILITATE ASH AND BUCKEYE WASTEWATER TREATMENT PLANTS SEQUOIA & KINGS CANYON NATIONAL PARKS	DRAWING NO. 102 / 177,507 PMIS/PKG NO. 317446 SHEET 96 OF 135

25/04/2022 15:43 MARIO GARCIA G:\CLIENTS\NPS\SEK\317446\DRAWINGS\ASH MOUNTAIN DWGS\ELEC\E3.2 ASH MTN PANEL SCHEDULES.DWG

PANELBOARD SCHEDULE

PANEL: NEW PANEL P-1	**PROJECT:** ASH MOUNTAIN WWTP SPRAYFIELD PUMP HOUSE REHABILITATION				
VOLTAGE: 480/277V	**PHASE:** 3	**WIRE:** 4	**AMPERE RATING:** 200A	**SC RATING:** 22KAIC	**MAIN:** 200A MAIN BREAKER
ENTRY: BOTTOM	**MOUNTING:** SURFACE				

LOADS:	**Amps**	**VA**	**LOAD TYPES:**	**REMARKS:**
PHASE A:	137	37945	1 = LIGHTING	NEW COMMERCIAL BOLT-ON CIRCUIT BREAKER METER/MAIN
PHASE B:	137	37945	2 = RECEPTACLES	
PHASE C:	130	36010	3 = MISC	
TOTAL:		111900	4 = MOTOR	
			5 = KITCHEN	

LOAD (VA)	LOAD SERVED	NOTE	LOAD TYPE	AMPS/ POLES		CKT NO	PHASE	CKT NO	AMPS/ POLES		LOAD TYPE	NOTE	LOAD SERVED	LOAD (VA)
18005	PUMP NO. 1		4	100	3	1	A	2	20	2	3		TRANSFORMER X-1 (FOR PANEL LA-1)	1935
18005	---		4	-	-	3	B	4	-	-	-		---	1935
18005	---		4	-	-	5	C	6	20	1			SPARE	
18005	PUMP NO. 2		4	100	3	7	A	8					SPACE ONLY	
18005	---		4	-	-	9	B	10					SPACE ONLY	
18005	---		4	-	-	11	C	12					SPACE ONLY	
	SPACE ONLY				1	13	A	14					SPACE ONLY	
	SPACE ONLY				1	15	B	16					SPACE ONLY	
	SPACE ONLY				1	17	C	18					SPACE ONLY	

LOADING BY TYPE			**CONNECTED**	**NEC CODE**	**DEMAND FACTOR**	**DEMAND**	**NOTES:**
LIGHTING			0 VA	210-19	125%	0 VA	
RECEPTACLES			0 VA	220-44	10kVA @ 100%, ELSE @ 50%	0 VA	
MISC.			1935 VA	220-60	100%	1935 VA	
MOTOR	LARGEST MOT.:	54015	108030 VA	220-50	100% + LARGEST x 25%	121534 VA	
KITCHEN	# OF KIT. UNITS:		0 VA	220-56		0 VA	
TOTAL			132 A			149 A	

PANEL: NEW PANEL LA-1

PANEL: NEW PANEL LA-1	**PROJECT:** ASH MOUNTAIN WWTP SPRAYFIELD PUMP HOUSE REHABILITATION				
VOLTAGE: 240/120V	**PHASE:** 1	**WIRE:** 3	**AMPERE RATING:** 100A	**SC RATING:** 10000	**MAIN:** 50A MAIN BREAKER
ENTRY:	**MOUNTING:** SURFACE				

LOADS:	**Amps**	**VA**	**LOAD TYPES:**	**REMARKS:**
PHASE A:	9	1065	1 = LIGHTING	NEW COMMERCIAL BOLT-ON CIRCUIT BREAKER PANELBOARD.
PHASE B:	6	670	2 = RECEPTACLES	DISCONNECT AND RECONNECT EXISTING LOADS FROM OLD PANEL TO NEW BREAKERS IN
			3 = MISC	THIS PANELBOARD
			4 = MOTOR	
TOTAL:		1735	5 = KITCHEN	

LOAD (VA)	LOAD SERVED	NOTE	LOAD TYPE	AMPS/ POLES		CKT NO	PHASE	CKT NO	AMPS/ POLES		LOAD TYPE	NOTE	LOAD SERVED	LOAD (VA)
200	PUMP CONTROLLER		3	20	1	1	A	2	15	1	3		BALL VALVE MOTORIZED	115
	SPARE			20	1	3	B	4	20	1	3		EFFLUENT MAGMETER	190
360	REC - INT. WALL RECEPTACLES		2	20	1	5	A	6	20	1	1		LTG - LIGHTS	90
180	REC - EXT WALL RECEPTACLE		2	20	1	7	B	8	20	1			SPARE	
	SPACE ONLY				1	9	A	10	20	2	4		EF-1	300
	SPACE ONLY				1	11	B	12	-	-	4		---	300
	SPACE ONLY				1	13	A	14					SPACE ONLY	
	SPACE ONLY				1	15	B	16					SPACE ONLY	
	SPACE ONLY				1	17	A	18					SPACE ONLY	

LOADING BY TYPE			**CONNECTED**	**NEC CODE**	**DEMAND FACTOR**	**DEMAND**	**NOTES:**
LIGHTING			90 VA	210-19	125%	113 VA	
RECEPTACLES			540 VA	220-44	10kVA @ 100%, ELSE @ 50%	540 VA	
MISC.			505 VA	220-60	100%	505 VA	
MOTOR	LARGEST MOT.:	800	600 VA	220-50	100% + LARGEST x 25%	800 VA	
KITCHEN	# OF KIT. UNITS:		0 VA	220-56		0 VA	
TOTAL			7 A			8 A	

REGISTERED PROFESSIONAL ENGINEER
PHILO CARTER
2231
ELECTRICAL
STATE OF CALIFORNIA

100% DRAFT

ASH MOUNTAIN LIFT STATION NEW PANEL SCHEDULES

DESIGNED: B. ANDERSON **CADD** M. SMITH **TECH. REVIEW:** V. CARTER **DATE:** 04/14/2022	**SUB SHEET NO.** E3.3	**TITLE OF SHEET** ASH MTN PUMP HOUSE PANEL SCHEDULE REHABILITATE ASH AND BUCKEYE WASTEWATER TREATMENT PLANTS SEQUOIA & KINGS CANYON NATIONAL PARKS	**DRAWING NO.** 102 / 177,507 **PMIS/PKG NO.** 317446 **SHEET** 97 OF 135

27/04/2022 10:12 JENNIFER CHEEK G:\CLIENTS\NPS\SEKI\317446\DRAWINGS\ASH MOUNTAIN DWGS\ELEC\E3.3 ASH MTN PUMP HOUSE PANEL SCHEDULES.DWG

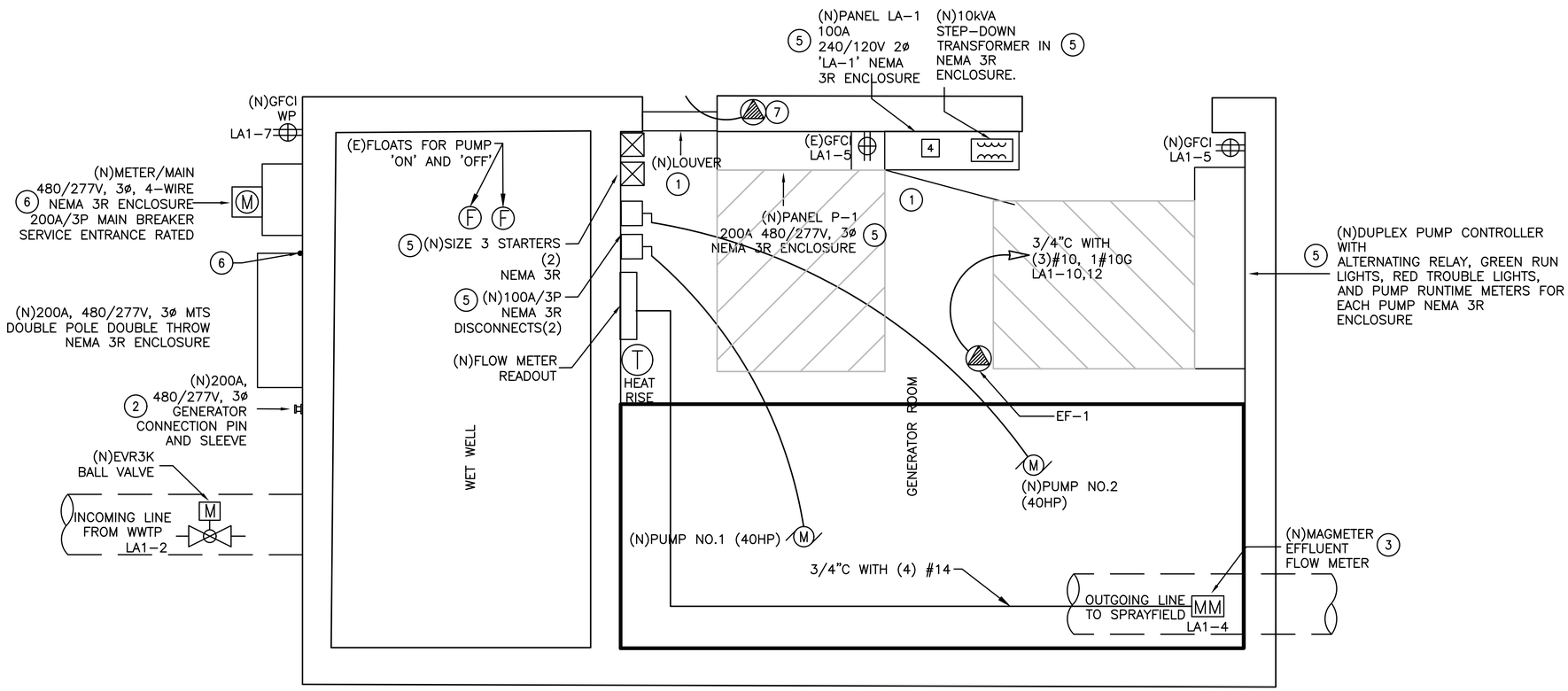

PLAN VIEW – SPRAYFIELD PUMP HOUSE POWER PLAN

NOTES:

A. COORDINATE ALL ASPECTS OF THE UTILITY COMPANY REQUIREMENTS WITH REGARD TO METERING, AND SPECIFIC GEAR REQUIREMENTS PRIOR TO ORDERING AND OR INSTALLATION.

KEYNOTES (#)

1. LOCATE PANEL LA–1, DISCONNECTS, AND STEP–DOWN TRANSFORMER. CONTRACTOR TO ENSURE THAT PROPER WORKING CLEARANCES ARE MAINTAINED.
2. CONNECTOR MUST BE COMPATIBLE WITH CURRENT PORTABLE GENERATOR USED BY PARK PERSONNEL.
3. FLOW METER MOUNTED ON PIPING EXITING THE PUMP HOUSE. COORDINATE MAGMETER INSTALLATION WITH GENERATOR INSTALL.
4. ALL INDOOR RECEPTACLES AT PUMPHOUSE ARE REQUIRED TO BE GFCI.
5. COORDINATE PANEL AND EQUIPMENT SIZES WITH PUMP PLACEMENT TO ENSURE ADEQUATE WORKING CLEARANCE FOR PANELS AND EQUIPMENT AS CODE REQUIRES.
6. MOVE CONDUIT AND J–BOX AS NEEDED TO INSTALL MTS.
7. INTERLOCK WITH EXHAUST FAN (EF–1).

1' 0 1' 2'
SCALE OF FEET

REGISTERED PROFESSIONAL ENGINEER
PHILO CARTER
ELECTRICAL
STATE OF CALIFORNIA

100% DRAFT

DESIGNED: B. ANDERSON CADD M. SMITH TECH. REVIEW: V. CARTER DATE: 04/14/2022	SUB SHEET NO. E4.0	TITLE OF SHEET SPRAYFIELD PUMP HOUSE POWER REHABILITATE ASH AND BUCKEYE WASTEWATER TREATMENT PLANTS SEQUOIA & KINGS CANYON NATIONAL PARKS	DRAWING NO. 102 / 177,507 PMIS/PKG NO. 317446 SHEET 98 OF 135

26/04/2022 13:49 MARIO GARCIA G:\CLIENTS\NPS\SEK1\317446\DRAWINGS\ASH MOUNTAIN DWGS\ELEC\E4.0 SPRAYFIELD PUMP HOUSE POWER.DWG

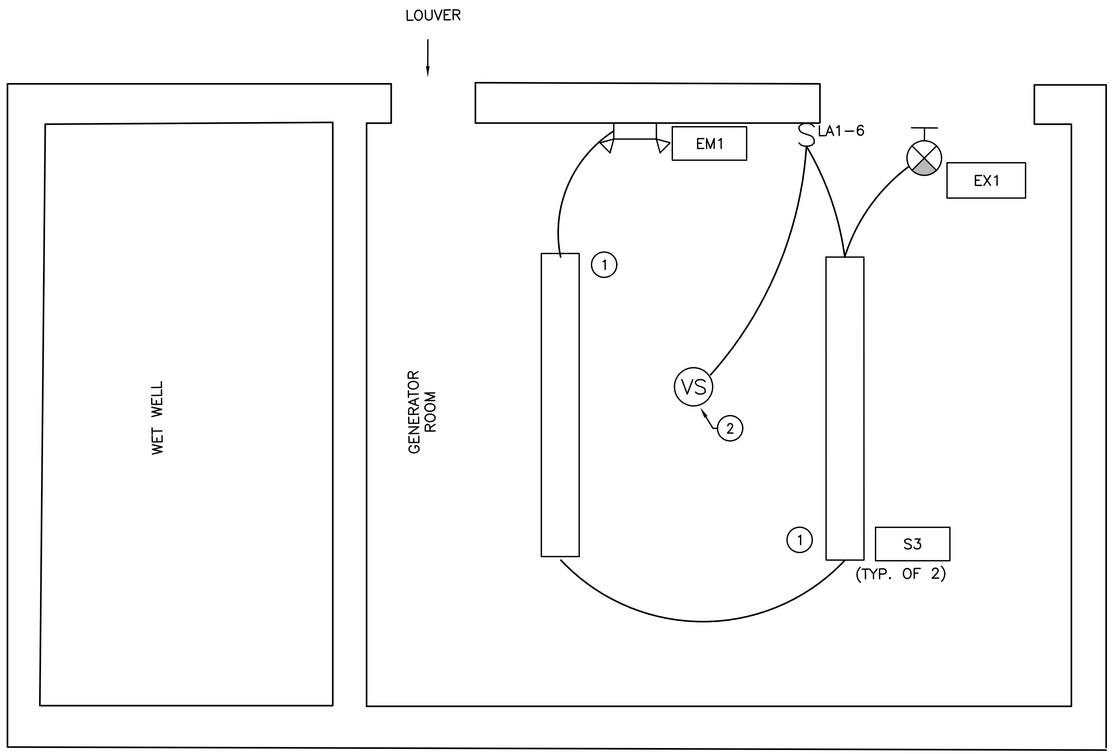

PLAN VIEW – SPRAYFIELD PUMP HOUSE LIGHTING PLAN

GENERAL NOTES:

A. ALL FINAL LOCATIONS AND ARRANGEMENTS OF LIGHTING FIXTURES SHALL BE VERIFIED AND APPROVED BEFORE INSTALLATION.

B. EACH BRANCH CIRCUIT HOMERUN SHALL HAVE NO MORE THAN THREE CIRCUITS. EACH BRANCH CIRCUIT HOMERUN SHALL HAVE A SEPARATE GREEN INSULATED EQUIPMENT GROUNDING CONDUCTOR.

C. MULTI–GANG BACKBOXES FOR DIFFERENT VOLTAGES AND TYPES OF EMERGENCY AND NORMAL BRANCH WIRING DEVICES SHALL HAVE DIVIDERS BETWEEN DEVICES.

D. PROVIDE UNSWITCHED LEG OF LOCAL LIGHTING CIRCUIT TO EMERGENCY/EXIT FIXTURE FOR CONSTANT CHARGE TO INTERNAL BATTERY.

KEYED NOTES (#)

1. LIGHT FIXTURES IN THIS AREA TO BE ENERGY EFFICIENT LED STRIP LIGHTS. ELECTRICAL CONTRACTOR IS TO ACCOUNT/PROVIDE FOR A FULLY OPERATIONAL INSTALLATION.

2. PROVIDE CEILING MOUNTED VACANCY SENSOR (COOPER: VAC–DT–2000R OR EQUIVALENT).

1' 0 1' 2'
SCALE OF FEET

REGISTERED PROFESSIONAL ENGINEER
PHILO CARTER
2331
ELECTRICAL
STATE OF CALIFORNIA
100% DRAFT

DESIGNED: B. ANDERSON CADD M. SMITH TECH. REVIEW: V. CARTER DATE: 04/14/2022	SUB SHEET NO. E4.1	TITLE OF SHEET SPRAYFIELD PUMP HOUSE LIGHTING REHABILITATE ASH AND BUCKEYE WASTEWATER TREATMENT PLANTS SEQUOIA & KINGS CANYON NATIONAL PARKS	DRAWING NO. 102 / 177,507 PMIS/PKG NO. 317446 SHEET 99 OF 135

26/04/2022 13:52 MARIO GARCIA G:\CLIENTS\NPS\SEKI\317446\DRAWINGS\ASH MOUNTAIN DWGS\ELEC\E4.1 SPRAYFIELD PUMP HOUSE LIGHTING.DWG

A ASH MOUNTAIN EXISTING CONTROL BUILDING NORTH EXTERIOR WALL

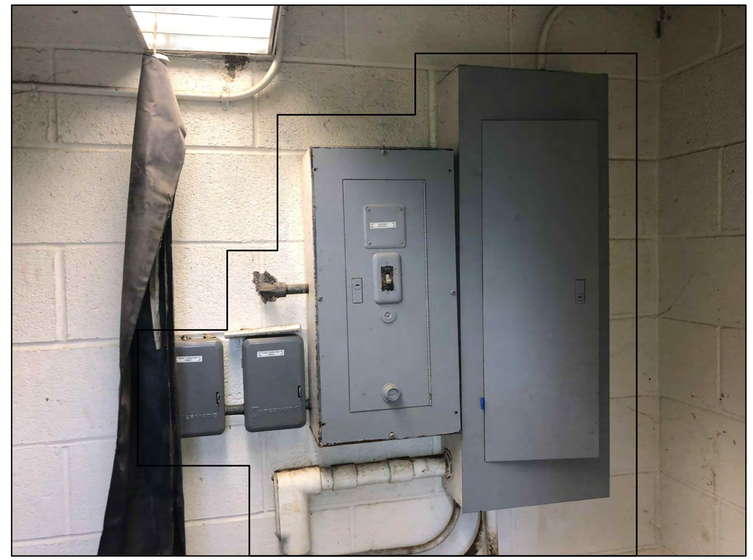

B ASH MOUNTAIN EXISTING CONTROL BUILDING PANEL 'A'

C ASH MOUNTAIN POND AERATION PUMPS

D ASH MOUNTAIN EXISTING STANDBY GENERATOR

E ASH MOUNTAIN EXISTING 250 GALLON PROPANE TANK

REGISTERED PROFESSIONAL ENGINEER
PHILO CARTER
ELECTRICAL
STATE OF CALIFORNIA
100% DRAFT

DESIGNED: B. ANDERSON CADD J. CHEEK TECH. REVIEW: B. ANDERSON DATE: 02/24/2022	SUB SHEET NO. E5.0	TITLE OF SHEET CTRL BLDG DEMO DETAILS REHABILITATE ASH AND BUCKEYE WASTEWATER TREATMENT PLANTS SEQUOIA & KINGS CANYON NATIONAL PARKS	DRAWING NO. 102 / 177,507 PMIS/PKG NO. 317446 SHEET 100 OF 135

26/04/2022 13:58 MARIO GARCIA G:\CLIENTS\NPS\SEK\317446\DRAWINGS\ASH MOUNTAIN DWGS\ELEC\E5.0 CTRL BLDG DEMO DETAILS.DWG

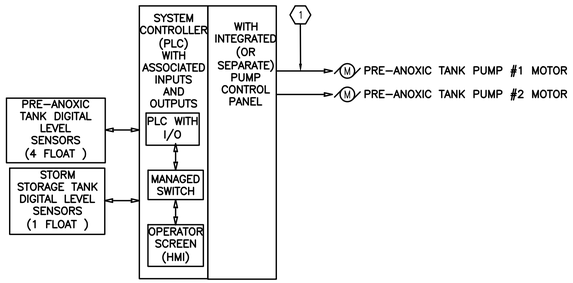

GENERAL NOTES

1. SEE CONTRACT SPECIFICATIONS FOR ADDITIONAL REQUIREMENTS AND DETAILS.
2. CONTROL PANEL SHALL BE PROVIDED BY CONTRACTOR. IT SHALL CONTAIN THE PLC COMPONENTS AND MOTOR CONTROLS REQUIRED TO MEET THE I/O REQUIREMENTS, AND A MANAGED SWITCH AND HMI DISPLAY. PANEL SHALL BE DESIGNED AND BUILT TO MEET UL508A REQUIREMENTS.
3. SEE SPECIFICATIONS FOR A COMPLETE LIST OF SIGNALS REQUIRED FOR THE PROJECT.
4. CONTRACTOR IS TO SUPPLY ALL ITEMS FOR A COMPLETE FUNCTIONING SYSTEM. SEE THE SPECIFICATIONS FOR ADDITIONAL INFORMATION AND REQUIREMENTS.
5. SEE NETWORK BLOCK DIAGRAM FOR COMMUNICATIONS NETWORK DETAILS

KEY NOTES

1. MOTORS DEPICTED IN THIS BLOCK DIAGRAM REPRESENT THE MOTOR WIRING TO THE MOTOR AND/OR THE CONTROLS FOR THE MOTOR CONTROLLER EQUIPMENT AS APPLICABLE TO THE COMPONENTS SUPPLIED.

ASH MOUNTAIN SYSTEM BLOCK DIAGRAM AND CONTROL SCHEME

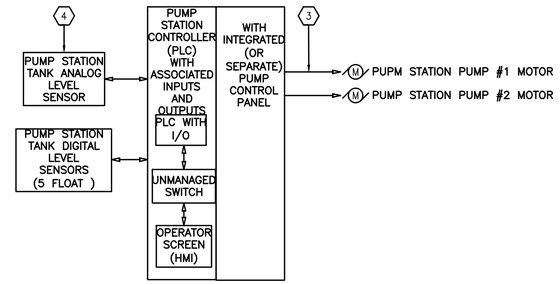

GENERAL NOTES

1. SEE CONTRACT SPECIFICATIONS FOR ADDITIONAL REQUIREMENTS AND DETAILS.
2. CONTROL PANEL SHALL BE PROVIDED BY CONTRACTOR. IT SHALL CONTAIN THE PLC COMPONENTS AND MOTOR CONTROLS REQUIRED TO MEET THE I/O REQUIREMENTS, AND AN UNMANAGED SWITCH AND HMI DISPLAY. PANEL SHALL BE DESIGNED AND BUILT TO MEET UL508A REQUIREMENTS.
3. SEE SPECIFICATIONS FOR A COMPLETE LIST OF SIGNALS REQUIRED FOR THE PROJECT.
4. CONTRACTOR IS TO SUPPLY ALL ITEMS FOR A COMPLETE FUNCTIONING SYSTEM. SEE THE SPECIFICATIONS FOR ADDITIONAL INFORMATION AND REQUIREMENTS.
5. SEE NETWORK BLOCK DIAGRAM FOR COMMUNICATIONS NETWORK DETAILS

KEY NOTES

3. MOTORS DEPICTED IN THIS BLOCK DIAGRAM REPRESENT THE MOTOR WIRING TO THE MOTOR AND/OR THE CONTROLS FOR THE MOTOR CONTROLLER EQUIPMENT AS APPLICABLE TO THE COMPONENTS SUPPLIED.
4. SENSORS LOCATED INSIDE TANKS SHALL HAVE INTRINSIC ISOLATION.

ASH MOUNTAIN PUMP STATION BLOCK DIAGRAM AND CONTROL SCHEME

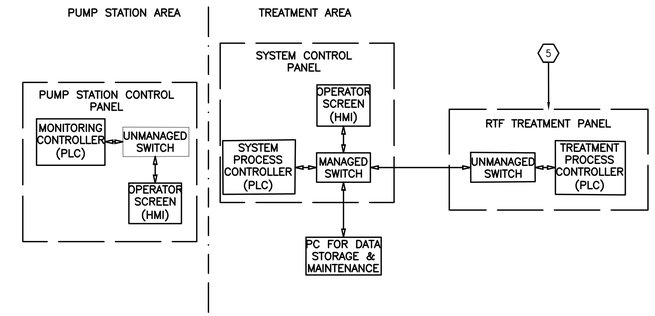

GENERAL NOTES

1. THIS NETWORK BLOCK DIAGRAM IS INTENDED TO IDENTIFY THE INTER-CONNECTIVITY REQUIRED TO ACCOMPLISH THE FUNCTIONAL REQUIREMENTS OF THE CONTROL SYSTEMS USED IN THIS PROJECT.
2. IT IS THE CONTRACTORS RESPONSIBILITY TO VERIFY THAT THE SELECTED COMPONENTS FOR THE PROJECT ACCOMPLISH COMMUNICATIONS BETWEEN THE COMPONENTS IDENTIFIED HERE.
3. NPS WILL CONFIGURE THE MANAGED NETWORK SWITCH TO BE SUPPLIED BY THE CONTRACTOR. THE CONTRACTOR SHALL SUBMIT A PROPOSED MANAGED NETWORK SWITCH TO NPS FOR REVIEW AND APPROVAL PRIOR TO INSTALLATION.
4. THE PC TO BE SUPPLIED BY THE CONTRACTOR WILL BE LOADED WITH ALL PLC AND HDMI CONFIGURATION PROGRAMS AND HAVE THE CONFIGURATION ACCEPTED AT COMMISSIONING FOR EACH PLC AND HIM. ALL CONTRACTOR TROUBLE SHOOTING AND DEBUG WILL BE PERFORMED USING THIS PC. ONCE COMMISSIONING IS COMPLETED ENSURE CURRENT VERSIONS OF THE CONTROL SYSTEMS PROGRAMS ARE KEPT ON THIS PC.
5. SEE CONTRACT SPECIFICATIONS FOR ADDITIONAL REQUIREMENTS.

KEY NOTES

5. PROVIDED BY OTHERS.

ASH MOUNTAIN NETWORK BLOCK DIAGRAM

DESIGNED: B. ANDERSON CADD E. YOUNG TECH. REVIEW: B. ANDERSON DATE: 02/18/2022	SUB SHEET NO. E6.0	TITLE OF SHEET CONTROL SCHEME REHABILITATE ASH AND BUCKEYE WASTEWATER TREATMENT PLANTS SEQUOIA & KINGS CANYON NATIONAL PARKS	DRAWING NO. 102 / 177,507 PMIS/PKG NO. 317446 SHEET 101 OF 135

26/04/2022 15:10 MARIO GARCIA G:\CLIENTS\NPS\SEK1\317446\DRAWINGS\ASH MOUNTAIN DWGS\ELEC\E6.0 CONTROL SCHEME.DWG

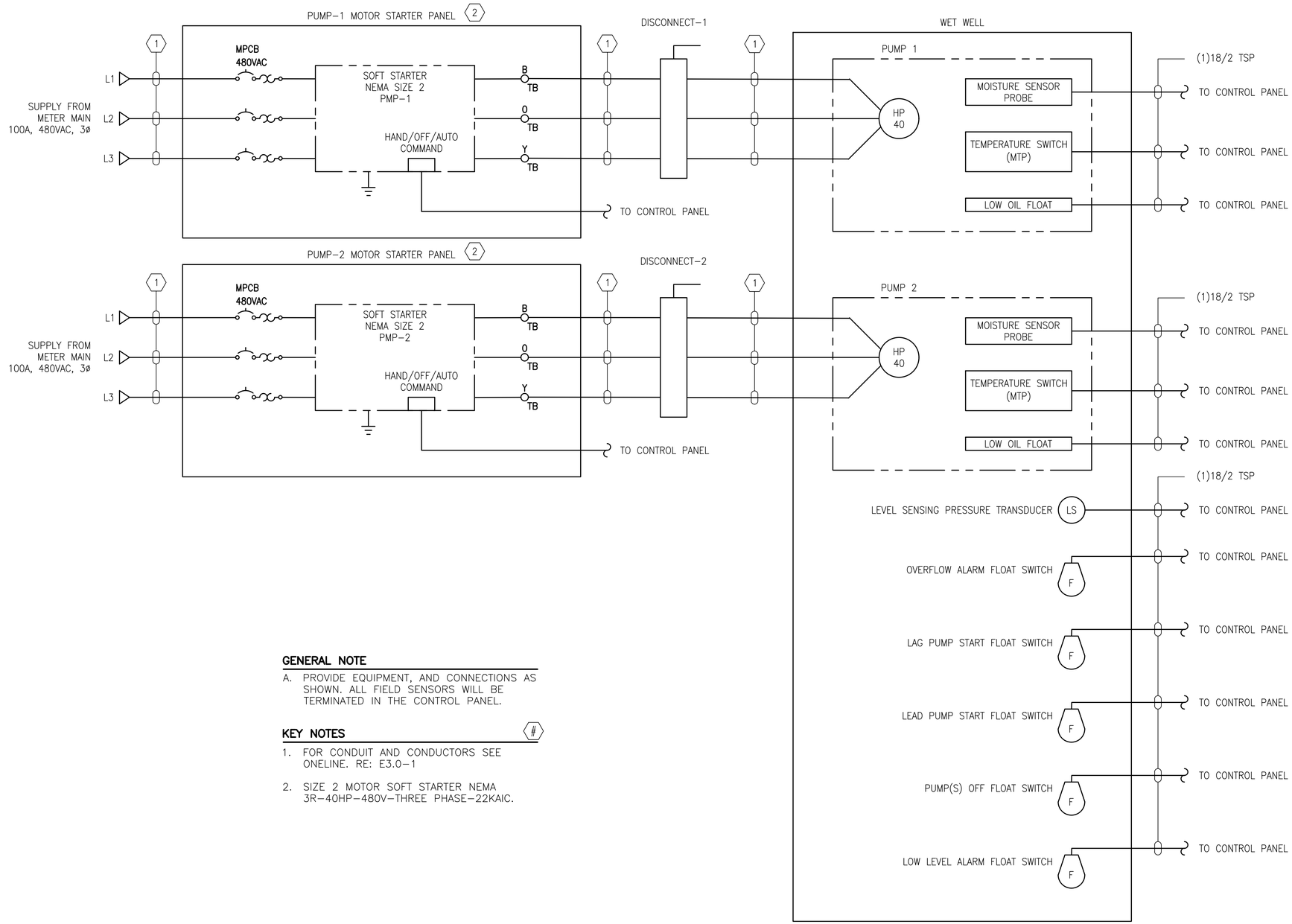

GENERAL NOTE

A. PROVIDE EQUIPMENT, AND CONNECTIONS AS SHOWN. ALL FIELD SENSORS WILL BE TERMINATED IN THE CONTROL PANEL.

KEY NOTES #

1. FOR CONDUIT AND CONDUCTORS SEE ONELINE. RE: E3.0-1
2. SIZE 2 MOTOR SOFT STARTER NEMA 3R-40HP-480V-THREE PHASE-22KAIC.

REGISTERED PROFESSIONAL ENGINEER
PHILO CARTER
2431
ELECTRICAL
STATE OF CALIFORNIA
100% DRAFT

ASH MOUNTAIN SPRAYFIELD LIFT STATION PUMP CONTROL SYSTEM DIAGRAM

DESIGNED: B. ANDERSON CADD E. YOUNG TECH. REVIEW: B. ANDERSON DATE: 02/18/2022	SUB SHEET NO. E6.1	TITLE OF SHEET CONTROL PANEL DIAGRAM-A REHABILITATE ASH AND BUCKEYE WASTEWATER TREATMENT PLANTS SEQUOIA & KINGS CANYON NATIONAL PARKS	DRAWING NO. 102 / 177,507 PMIS/PKG NO. 317446 SHEET 102 OF 135

25/04/2022 15:43 MARIO GARCIA G:\CLIENTS\NPS\SEKI\317446\DRAWINGS\ASH MOUNTAIN DWGS\ELEC\E6.1 CONTROL PANEL DIAGRAM-A.DWG

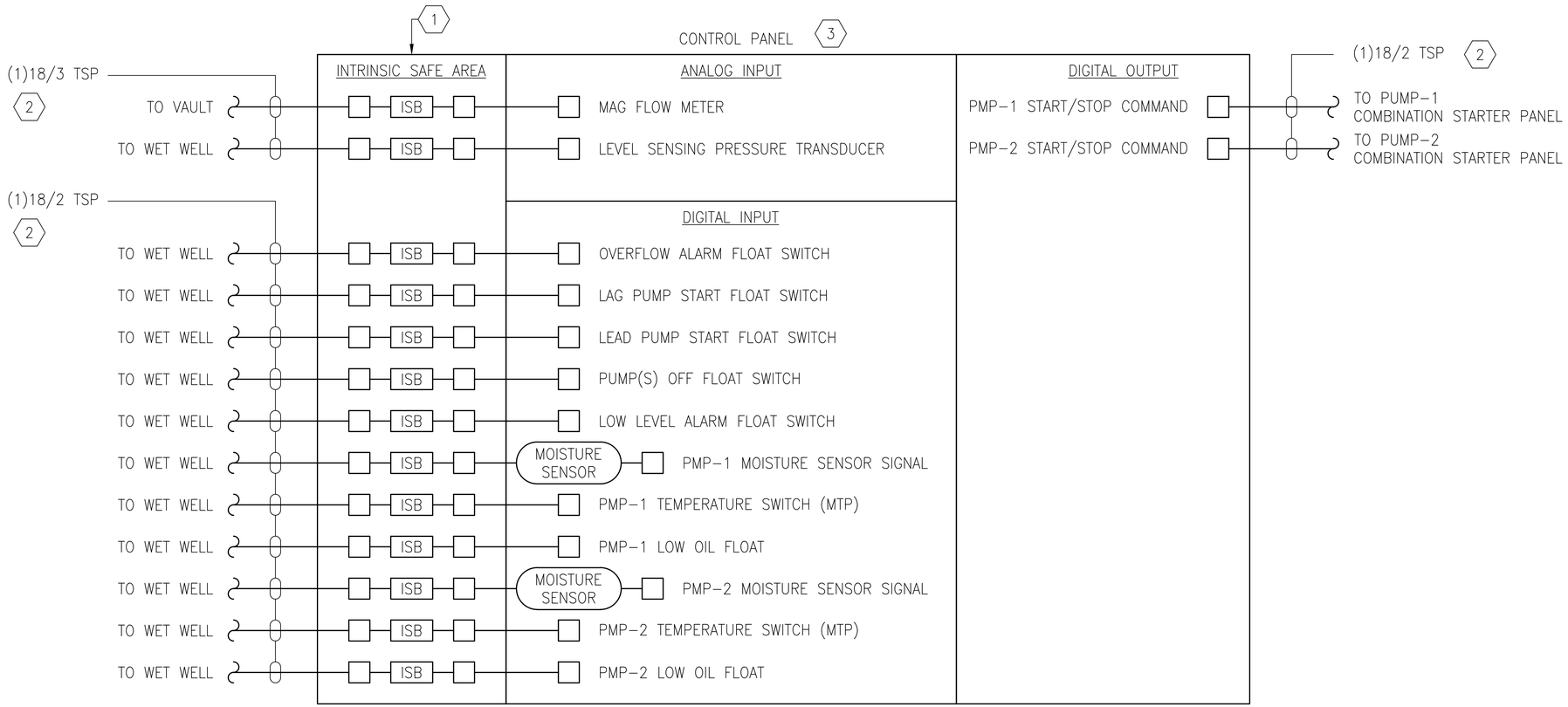

GENERAL NOTE

A. PROVIDE ALL EQUIPMENT, AND CONNECTIONS AS SHOWN. ALL FIELD SENSORS WILL BE TERMINATED IN THE CONTROLS PANEL.

B. MAG FLOW METER TO BE INTRINSICALLY SAFE, WITH FLOW RANGE 0–1600 GPM MINIMUM.

C. PS–1 TO BE PRESSURE SENSOR WITH 24 VDC POWER IN, 4–20 mA POWER OUT.

D. FLOAT SWITCHES TO BE –40 TO 200 FAHRENHEIT RATED 24 VDC, 0.5A.

E. LEVEL SENSING PRESSURE TRANSDUCER.

KEY NOTES

1. INTRINSICALLY SAFE AREA SHALL FOLLOW NEC 504 & UL698A.
2. CABLE SHIELDING SHALL BE GROUNDED AND ONLY AT ONE END. THE CABLE SHIELDING GROUNDING SHALL BE IN THE CONTROL PANEL.
3. PANEL PROVIDED BY OTHERS. INSTALLATION AND FIELD WIRE TERMINATION BY CONTRACTOR.

ASH MOUNTAIN SPRAYFIELD LIFT STATION PUMP CONTROL PANEL DETAILS

REGISTERED PROFESSIONAL ENGINEER
PHILO CARTER
2231
ELECTRICAL
STATE OF CALIFORNIA
100% DRAFT

DESIGNED: B. ANDERSON CADD E. YOUNG TECH. REVIEW: B. ANDERSON DATE: 02/18/2022	SUB SHEET NO. E6.2	TITLE OF SHEET CONTROL PANEL DIAGRAM–B REHABILITATE ASH AND BUCKEYE WASTEWATER TREATMENT PLANTS SEQUOIA & KINGS CANYON NATIONAL PARKS	DRAWING NO. 102 / 177,507 PMIS/PKG NO. 317446 SHEET 103 OF 135

25/04/2022 15:43 MARIO GARCIA G:\CLIENTS\NPS\SEKI\317446\DRAWINGS\ASH MOUNTAIN DWGS\ELEC\E6.2 CONTROL PANEL DIAGRAM-B.DWG

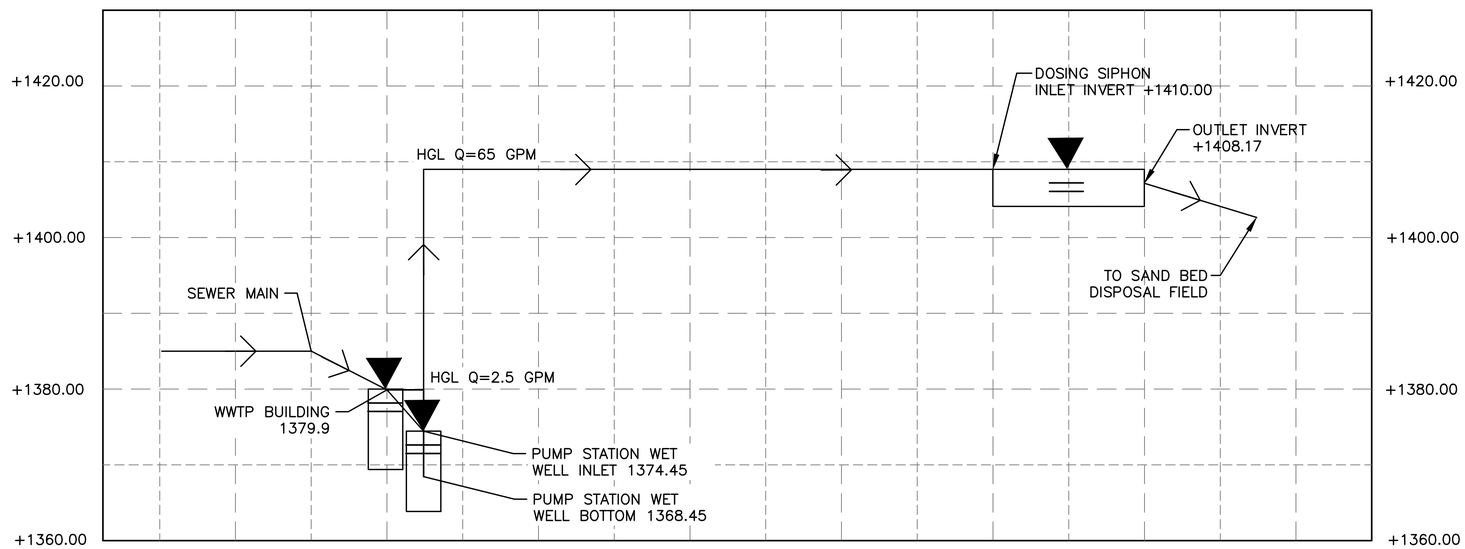

PROFILE VIEW – HYDRAULIC FLOW PROFILE BHWWTP
SCALE: NTS

REGISTERED PROFESSIONAL ENGINEER
DAVID BARTON BROOKE
NO. 72417
CIVIL
STATE OF CALIFORNIA
100% DRAFT

DESIGNED: D. BROOKE CADD: M. GARCIA TECH. REVIEW: J. BLOM DATE: 04/07/2022	SUB SHEET NO. HP2.1	TITLE OF SHEET HYDRAULIC PROFILE PHASE 1 BHWWTP REHABILITATE ASH AND BUCKEYE WASTEWATER TREATMENT PLANTS SEQUOIA & KINGS CANYON NATIONAL PARKS	DRAWING NO. 102/177,507 PMIS/PKG NO. 317446 SHEET 104 OF 135

26/04/2022 13:37 MARIO GARCIA G:\CLIENTS\NPS\SEKI\317446\DRAWINGS\BUCKEY DWGS\12_CIVIL SHEETS\HYDRAULIC PROFILE PHASE 1 BHWWTP.DWG

BHWWTP DAILY SEPTIC TANK TREATMENT PARAMETERS			
BUCKEYE HOUSING WWTP INFLUENT FLOWS RECORDED 2014-2019			
6-YEAR AVERAGE	MAX MONTHLY AVE GPD	MIN MONTHLY AVE GPD	AVE MONTHLY MEAN GPD
JANUARY	2,617	17	728
FEBRUARY	4,550	133	703
MARCH	2,783	17	517
APRIL	717	33	265
MAY	1,567	200	764
JUNE	1,850	433	1,015
JULY	1,450	300	916
AUGUST	1,617	233	835
SEPTEMBER	1,533	417	898
OCTOBER	1,417	400	773
NOVEMBER	967	33	354
DECEMBER	567	17	183
AVERAGE	**1,803**	**186**	**662**

BHWWTP DRAINFIELD SIZING CRITERIA			
SOURCE	INFILTRATION RATE MIN/IN	APPLICATION RATE GPD/SF	MINIMUM REQUIRED EFFECTIVE AREA – SF
TEST PIT 1	31	Q=5/SQRT(t)	2,820GPD/0.88GPD/SF
TEST PIT 2	42		
TEST PIT 3	50	0.88	3,200
STATE NOA	10		
STATE NOA	28		
AVERAGE	32.2		

BHWWTP PRIMARY TREATMENT PARAMETERS	
WASTE DISCHARGE PERMIT FLOWS VS DESIGN MAXIMUM DAY FLOW	
WASTE DISCHARGE PERMIT FLOWS	
DESCRIPTION	2014 THRU 2019 AVE VOLUME (GPD)
CURRENT WASTE DISCHARGE PERMIT DESIGN FLOW	3,600
CURRENT WASTE DISCHARGE PERMIT AVERAGE DRY WEATHER FLOW	1,500
AVERAGE MAXIMUM DAY VS DESIGN MAXIMUM DAY FLOW	
SIX YEAR AVERAGE DAY FLOW	867
DESIGN MAXIMUM DAY FLOW[1]	2,820
1 PEAKING FACTOR = 3.25	
SEPTIC TANK SIZE - GALLONS	
DESIGN MINIMUM	2,820
LARGER CAPACITY FOR SLUDGE STORAGE	4,300

BHWWTP SAND BED DISPOSAL EFFLUENT CAPACITY				
ZONE 1				
ZONE	PIPE DIA – INCH	PIPE LENGTH – FT	PIPE VOLUME – GAL	DISCHARGE VOLUME – GAL (1)
ZONE 1–1	4	30	78.3	52.8
ZONE 1–2	4	36	117.4	79.2
ZONE 1–3	4	36	117.4	79.2
ZONE 1–4	4	18	58.7	39.6
ZONE(1) 1 – 4 TOTAL (2)		120	371.7	250.9
ZONE 2				
ZONE 2–1	4	18	58.7	39.6
ZONE 2–2	4	44	143.5	96.8
ZONE 2–3	4	22	71.7	48.4
ZONE 2–4	4	22	71.7	48.4
ZONE(2) 1 – 4 TOTAL (2)	4	106	345.6	233.3
SYSTEM TOTAL		226	717.0	484.2
(1) DISCHARGE VOLUME EQUALS 67.5% PIPE CAPACITY VOLUME (2) VOLUME EQUALS DOSING SIPHON SINGLE DISCHARGE VOLUME DOSE				

DESIGN CRITERIA – PRIMARY TREATMENT AND DISPOSAL (BHWWTP)

REGISTERED PROFESSIONAL ENGINEER
DAVID BARTON BROOKE
NO. 72417
CIVIL
STATE OF CALIFORNIA
100% DRAFT

DESIGNED: D. BROOKE CADD M. GARCIA TECH. REVIEW: J. BLOM DATE: 04/07/2022	SUB SHEET NO. DC2.1	TITLE OF SHEET DESIGN CRITERIA (BHWWTP) REHABILITATE ASH AND BUCKEYE WASTEWATER TREATMENT PLANTS SEQUOIA & KINGS CANYON NATIONAL PARKS	DRAWING NO. 102 / 177,507 PMIS/PKG NO. 317446 SHEET 105 OF 135

25/04/2022 15:45 MARIO GARCIA G:\CLIENTS\NPS\SEQ\317446\DRAWINGS\BUCKEY DWGS\12 CIVIL SHEETS\DC2.1 DESIGN CRITERIA - PRIMARY TREATMENT BHWWTP.DWG

BHWWTP LIFT STATION HYDRAULICS

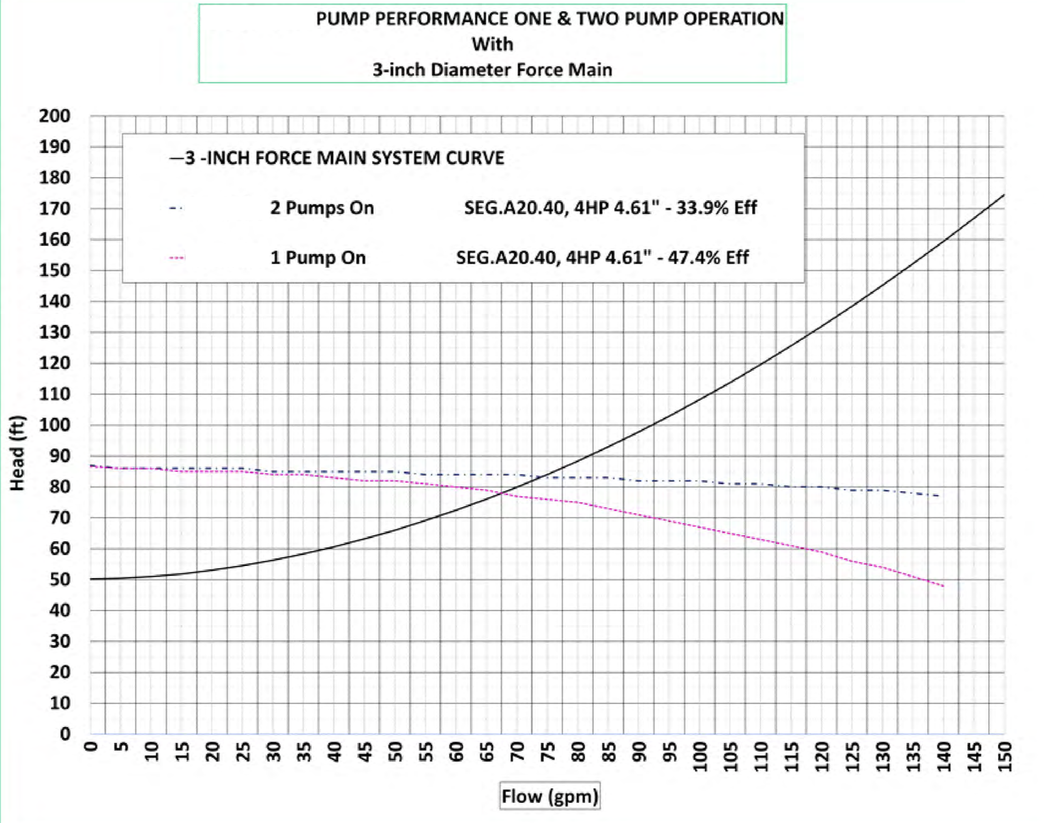

BHWWTP DOSING SIPHON & SAND BED PARAMETERS

DISPOSAL FIELD THREE-WAY VALVE OPERATION LOGIC

DESCRIPTION			SIPHON – A		SIPHON – B	
			VALVE #1 OPERATION		VALVE #2 OPERATION	
PERIOD	REST BED NO.	DISCHARGE TO	FIELD 1	FIELD 2	FIELD 1	FIELD 2
1	NA	DRAINFIELD #1 & #2	OPEN	CLOSED	CLOSED	OPEN
2	1	DRAINFIELD #2	CLOSED	OPEN	CLOSED	OPEN
3	2	DRAINFIELD #1	OPEN	CLOSED	OPEN	CLOSED

NOTE: IN A TWO–YEAR CYCLE, EACH BED OPERATES FOR 18–MONTHS AND RESTS FOR 6–MONTHS.

BHWWTP SAND BED HYDRAULICS

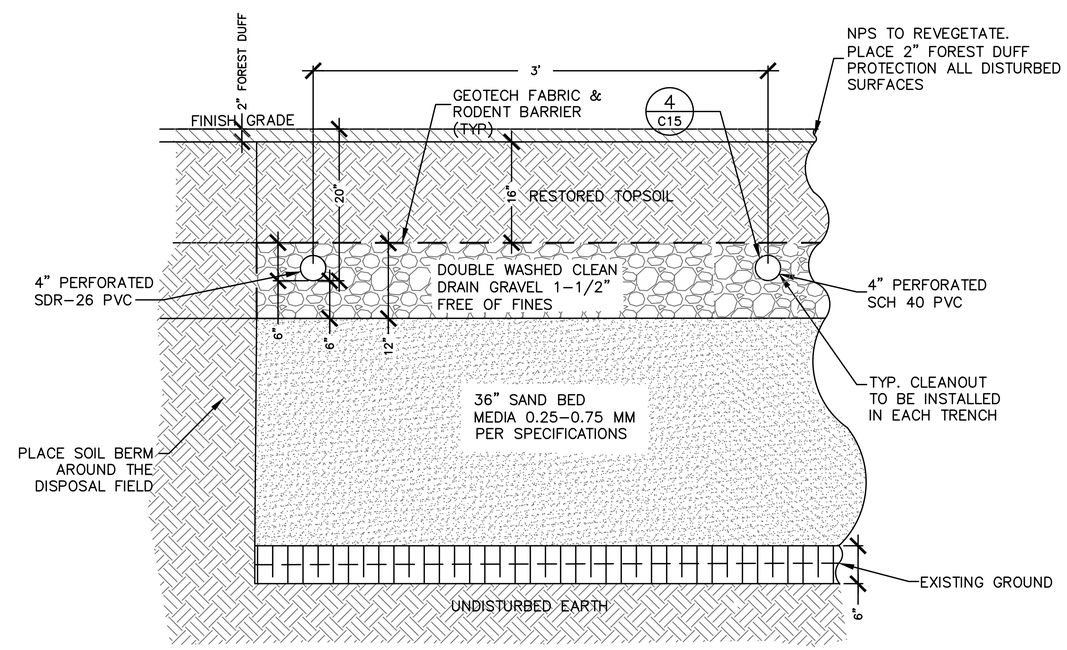

DESIGN CRITERIA – LIFT STATION – DOSING SIPHON & SAND BED (BHWWTOP)

REGISTERED PROFESSIONAL ENGINEER
DAVID BARTON BROOKE
NO. 72417
CIVIL
STATE OF CALIFORNIA
100% DRAFT

DESIGNED: D. BROOKE CADD M. GARCIA TECH. REVIEW: J. BLOM DATE: 04/07/2022	SUB SHEET NO. DC2.2	TITLE OF SHEET DESIGN CRITERIA (BHWWTP) REHABILITATE ASH AND BUCKEYE WASTEWATER TREATMENT PLANTS SEQUOIA & KINGS CANYON NATIONAL PARKS	DRAWING NO. 102 / 177,507 PMIS/PKG NO. 317446 SHEET 106 OF 135

25/04/2022 15:46 MARIO GARCIA G:\CLIENTS\NPS\SEQ\317446\DRAWINGS\BUCKEY DWGS\12 CIVIL SHEETS\DC2.2 DESIGN CRITERIA – LIFT STATION – DOSING SIPHON & SAND BED.DWG

SITE PLAN BHWWTP

REGISTERED PROFESSIONAL ENGINEER
DAVID BARTON BROOKE
NO. 72417
CIVIL
STATE OF CALIFORNIA
100% DRAFT

100' 0 100' 200'
SCALE OF FEET

DESIGNED: D. BROOKE CADD M. GARCIA TECH. REVIEW: J. BLOM DATE: 04/07/2022	SUB SHEET NO. C2.1	TITLE OF SHEET PROJECT SITE PLAN REHABILITATE ASH AND BUCKEYE WASTEWATER TREATMENT PLANTS SEQUOIA & KINGS CANYON NATIONAL PARKS	DRAWING NO. 102/177,507 PMIS/PKG NO. 317446 SHEET 107 OF 135

25/04/2022 15:46 MARIO GARCIA G:\CLIENTS\NPS\SEKI\317446\DRAWINGS\BUCKEY DWGS\CIVIL BUCKEYE\92 PROJECT SITE PLAN.DWG

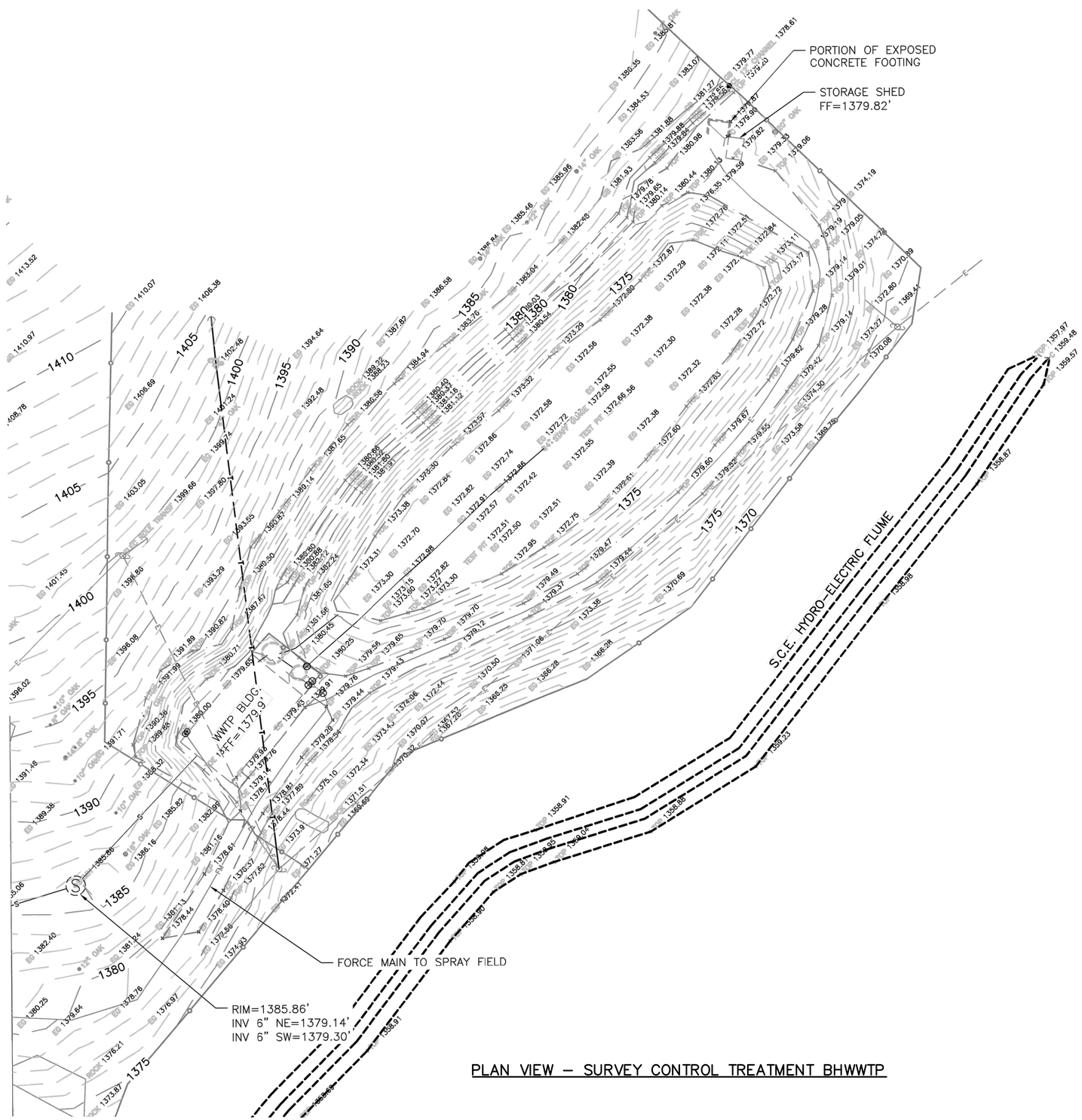

PLAN VIEW – SURVEY CONTROL TREATMENT BHWWTP

SURVEYOR'S NOTES:

VEGETATION: TREE DIAMETERS WERE MEASURED AT CHEST HEIGHT AND ARE APPROXIMATE. ALL SYMBOLS HAVE BEEN SCALED BASED ON THIS MEASUREMENT.

SYMBOLS AND ABBREVIATIONS:

AC ASPHALT CONCRETE
C CONCRETE
CP CONTROL POINT
EG EXISTING GROUND
EP EDGE OF PAVEMENT
FF FINISHED FLOOR ELEVATION
FL FLOW LINE
GB GRADE BREAK
TC TOP FACE OF CURB

CONTROL POINT
SANITARY SEWER MANHOLE
WATER VALVE
FIRE HYDRANT
TREE
ELEC. TRANSFORMER
ELEC. VAULT
ELEC. METER

TOPOGRAPHY NOTE

TOPOGRAPHY SHOWN HEREON WAS COLLECTED BY PROVOST AND PRITCHARD CONSULTING DURING A FIELD SURVEY CONDUCTED IN MARCH OF 2020.

BASIS OF BEARING

THE CALIFORNIA COORDINATE SYSTEM OF 1983, ZONE 4, AS ESTABLISHED LOCALLY BY STATIC GPS OBSERVATION.

SITE BENCH MARK

POINT #3 (ALUMINUM DISK MARKED BE–1)

ELEVATION: 1388.10' NAVD88 DATUM
PER STATIC GPS OBSERVATIONS PROCESSED WITH NGS OPUS PROJECTS

CALIFORNIA COORDINATE SYSTEM OF 1983, ZONE 4 COORDINATES:
N: 2058110.99'
E: 6608777.00'

SECONDARY BENCHMARK

POINT #4 (ALUMINUM DISK MARKED BE–2)

ELEVATION: 1386.67' NAVD88 DATUM
PER STATIC GPS OBSERVATIONS PROCESSED WITH NGS OPUS PROJECTS AND RTK GPS OBSERVATIONS

CALIFORNIA COORDINATE SYSTEM OF 1983, ZONE 4 COORDINATES:
N: 2058125.02'
E: 6608435.93'

REGISTERED PROFESSIONAL ENGINEER
DAVID BARTON BROOKE
NO. 72417
CIVIL
STATE OF CALIFORNIA
100% DRAFT

20' 0 20' 40'
SCALE OF FEET

DESIGNED: D. BROOKE	SUB SHEET NO.	TITLE OF SHEET	DRAWING NO.
CADD M. GARCIA	C2.2	SURVEY CONTROL TREATMENT BHWWTP	102 / 177,507
TECH. REVIEW: J. BLOM		REHABILITATE ASH AND BUCKEYE WASTEWATER TREATMENT PLANTS SEQUOIA & KINGS CANYON NATIONAL PARKS	PMIS/PKG NO. 317446
DATE: 04/07/2022			SHEET 108 OF 135

25/04/2022 15:46 MARIO GARCIA G:\CLIENTS\NPS\SEKI\317446\DRAWINGS\BUCKEY DWGS\CIVIL BUCKEYE\87 SURVEY CONTROL TREATMENT BHWWTP.DWG

TOPOGRAPHY NOTE

TOPOGRAPHY SHOWN HEREON WAS COLLECTED BY PROVOST AND PRITCHARD CONSULTING DURING A FIELD SURVEY CONDUCTED IN MARCH OF 2020.

BASIS OF BEARING

THE CALIFORNIA COORDINATE SYSTEM OF 1983, ZONE 4, AS ESTABLISHED LOCALLY BY STATIC GPS OBSERVATION.

SITE BENCH MARK

POINT #3 (ALUMINUM DISK MARKED BE-1)

ELEVATION: 1388.10' NAVD88 DATUM
PER STATIC GPS OBSERVATIONS PROCESSED WITH NGS OPUS PROJECTS

CALIFORNIA COORDINATE SYSTEM OF 1983, ZONE 4 COORDINATES:
N: 2058110.99'
E: 6608777.00'

SECONDARY BENCHMARK

POINT #4 (ALUMINUM DISK MARKED BE-2)

ELEVATION: 1386.67' NAVD88 DATUM
PER STATIC GPS OBSERVATIONS PROCESSED WITH NGS OPUS PROJECTS AND RTK GPS OBSERVATIONS

CALIFORNIA COORDINATE SYSTEM OF 1983, ZONE 4 COORDINATES:
N: 2058125.02'
E: 6608435.93'

SURVEYOR'S NOTES:

VEGETATION: TREE DIAMETERS WERE MEASURED AT CHEST HEIGHT AND ARE APPROXIMATE. ALL SYMBOLS HAVE BEEN SCALED BASED ON THIS MEASUREMENT.

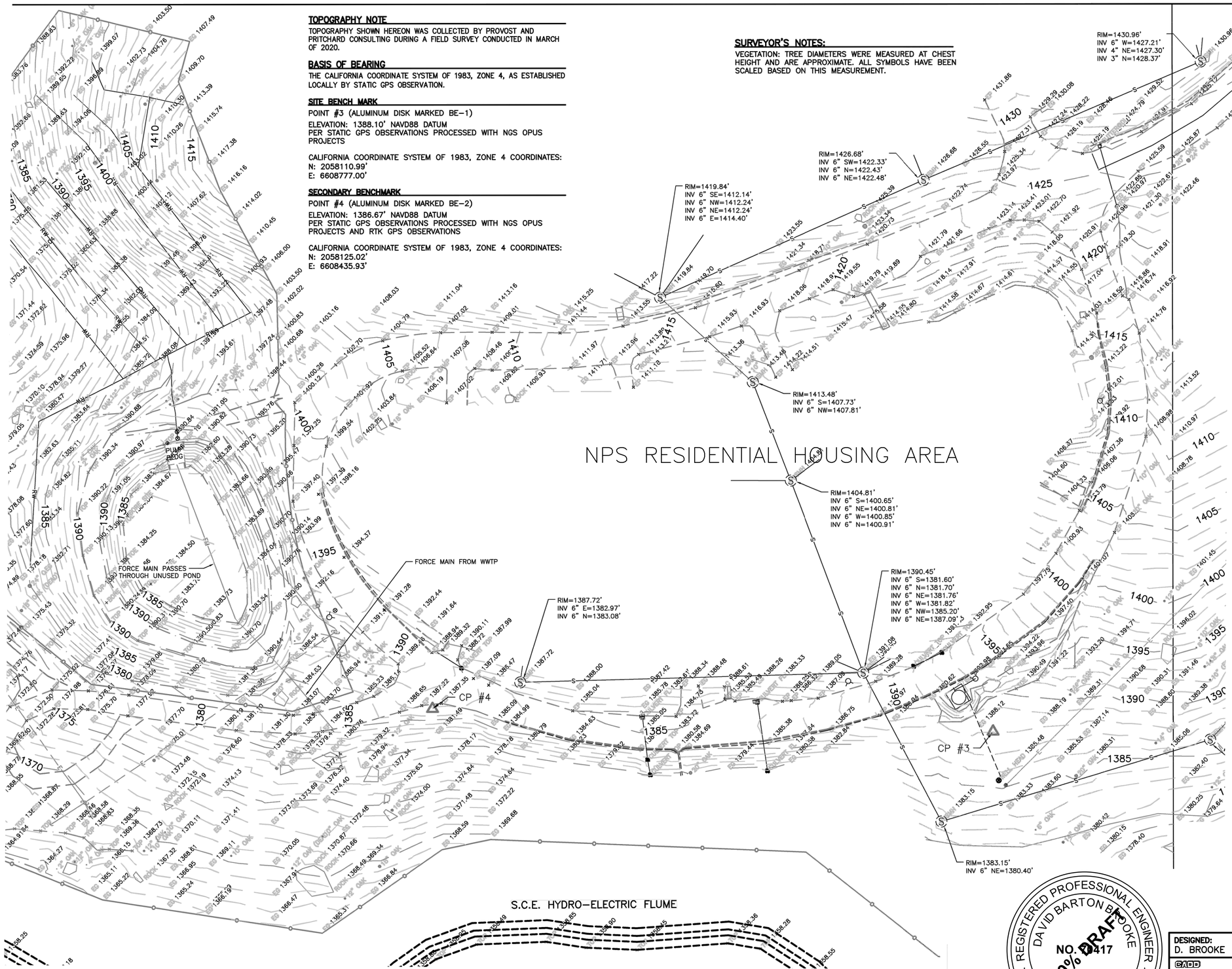

SYMBOLS AND ABBREVIATIONS:

AC	ASPHALT CONCRETE
C	CONCRETE
CP	CONTROL POINT
EG	EXISTING GROUND
EP	EDGE OF PAVEMENT
FF	FINISHED FLOOR ELEVATION
FL	FLOW LINE
GB	GRADE BREAK
TC	TOP FACE OF CURB

CONTROL POINT
SANITARY SEWER MANHOLE
WATER VALVE
FIRE HYDRANT
TREE
ELEC. TRANSFORMER
ELEC. VAULT
ELEC. METER

20' 0 20' 40'
SCALE OF FEET

PLAN VIEW – SURVEY CONTROL SPRAYFIELD BHWWTP

REGISTERED PROFESSIONAL ENGINEER
DAVID BARTON BROOKE
NO. 0417
CIVIL
STATE OF CALIFORNIA
100% DRAFT

DESIGNED: D. BROOKE CADD: M. GARCIA TECH. REVIEW: J. BLOM DATE: 04/07/2022	SUB SHEET NO. C2.3	TITLE OF SHEET SURVEY CONTROL SPRAYFIELD BHWWTP REHABILITATE ASH AND BUCKEYE WASTEWATER TREATMENT PLANTS SEQUOIA & KINGS CANYON NATIONAL PARKS	DRAWING NO. 102 / 177,507 PMIS/PKG NO. 317446 SHEET 109 OF 135

25/04/2022 15:46 MARIO GARCIA G:\CLIENTS\NPS\SEKI\317446\DRAWINGS\BUCKEY DWGS\CIVIL BUCKEYE\88 SURVEY CONTROL SPRAYFIELD BHWWTP.DWG

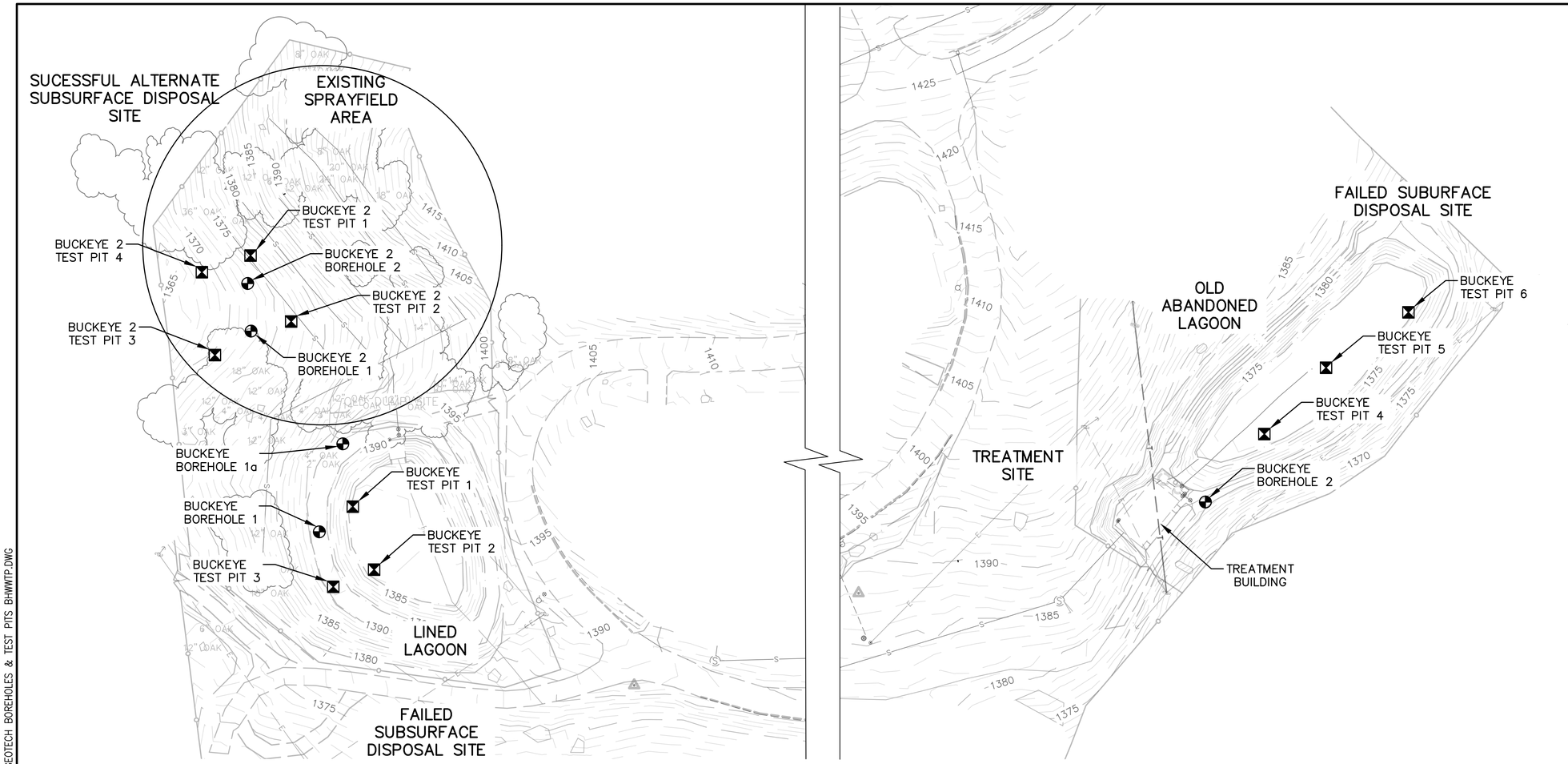

PLAN VIEW – GEOTECH – BOREHOLES & TEST PITS BHWWTP

SUMMARY OF BUCKEYE HOUSING PERCOLATION TESTING

TEST PIT	MEASURED PERCOLATION RATE (MIN/INCH)	LOCATION
BE-TP-1	50	LINED LAGOON
BE-TP-2	CANNOT CALCULATE	OLD ABANDONED LAGOON
BE-TP-3	CANNOT CALCULATE	LINED LAGOON
BE-TP-4	CANNOT CALCULATE	OLD ABANDONED LAGOON
BE-TP-5	250	OLD ABANDONED LAGOON
BE-TP-6	CANNOT CALCULATE	OLD ABANDONED LAGOON
JUNE 10, 2010 SWRCB NOA PAGE 2	10	EXISTING SPRAYFIELD
JUNE 10, 2010 SWRCB NOA PAGE 2	28	EXISTING SPRAYFIELD
BE2-TP-1	31	EXISTING SPRAYFIELD
BE2-TP-2	42	EXISTING SPRAYFIELD
BE2-TP-3	50	EXISTING SPRAYFIELD
BE2-TP-4	250	EXISTING SPRAYFIELD

SUMMARY OF BUCKEYE HOUSING BOREHOLE TESTING

TEST BORING DEPTH – FEET	USCS CLASSIFICATION[1,2,3]	LOCATION
BE-B-1 (0 TO 15.4)	SC (CLAYEY SAND)	LINED LAGOON
BE-B-1a (0 to 15.8)	SC (CLAYEY SAND)	LINED LAGOON
BE-B-2 (0 to 15.2)	SC (CLAYEY SAND)	OLD ABANDONED LAGOON
BE2-B-1 (0 to 35.1)	SC (CLAYEY SAND)	SPRAYFIELD
BE2-B-2 (0 to 35.1)	SC (CLAYEY SAND)	SPRAYFIELD

NOTES:
1. SC (CLAYEY SAND) SANDS WITH 50% OR MORE OF COARSE FRACTION PASS NO.4 SIEVE; HAVING SANDS WITH FINES MORE THAN 12% FINES, AND FINES CLASSIFY AS CL OR CH WHERE CL = LEAN CLAY AND CH = FAT CLAY.

REGISTERED PROFESSIONAL ENGINEER
DAVID BARTON BROOKE
NO. 74417
CIVIL
STATE OF CALIFORNIA
100% DRAFT

40' 0 40' 80'
SCALE OF FEET

DESIGNED: D. BROOKE CADD M. GARCIA TECH. REVIEW: J. BLOM DATE: 04/07/2022	SUB SHEET NO. C2.4	TITLE OF SHEET GEOTECH BOREHOLES & TEST PITS BHWWTP REHABILITATE ASH AND BUCKEYE WASTEWATER TREATMENT PLANTS SEQUOIA & KINGS CANYON NATIONAL PARKS	DRAWING NO. 102/177,507 PMIS/PKG NO. 317446 SHEET 110 OF 135

25/04/2022 15:46 MARIO GARCIA G:\CLIENTS\NPS\SEKI\317446\DRAWINGS\BUCKEY DWGS\CIVIL BUCKEYE\89 GEOTECH BOREHOLES & TEST PITS BHWWTP.DWG

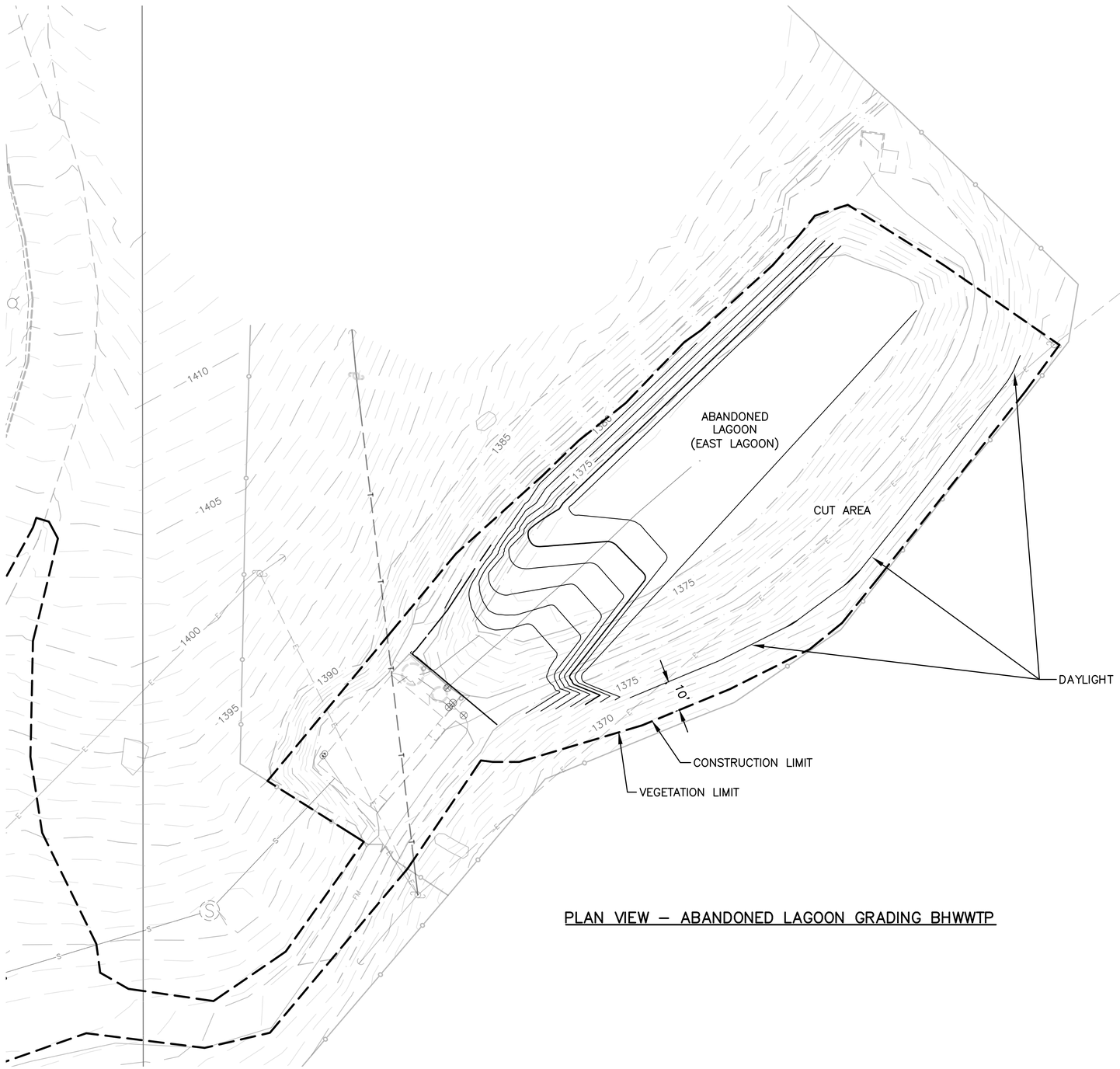

PLAN VIEW – ABANDONED LAGOON GRADING BHWWTP

NOTES:

1. COORDINATE GRADING SEQUENCE AND CONSTRUCTION OF NEW ACCESS ROAD WITH AMWWTP PHASING DRAWINGS PH1.1, PH1.2, AND PH1.3.
2. COORDINATE BHWWTP GRADING PLAN EXPORT TO HAUL TO AMWWTP GRADING SITE. SOME ADDITIONAL IMPORT FILL MATERIAL FROM OUTSIDE THE PARK MAY BE EXPECTED.
3. MAXIMUM CUT OR FILL SLOPES 2:1
4. MINIMUM SLOPE 2% TO DRAIN.
5. RE–VEGETATION WILL BE DONE BY PARK STAFF.

ESTIMATED EARTH QUANTITIES CUBIC YARD (FILL FACTOR 1.3)

SOURCE	CUT	FILL	IMPORT	EXPORT
AMWWTP	2512	5920	3408	–0–
BHWWTP E LAGOON	1005	417	–0–	588
BHWWTP W LAGOON	2482	711	–0–	1771
TOTAL	5999	7048	3048	2359
OFFSITE IMPORT	(7048 – 5999) = 1049		(3048 – 2359) = 1049	

SURFACE RESTORATION

ITEM	BEGIN STA.	END STA.	AREA SF	TYPE	KEYNOTE
NEW ACCESS ROAD	N/A	N/A		ASPHALT	
N/A	N/A	N/A	N/A	CONCRETE	
VEGETATION	N/A	N/A	24321.14	VEGETATION	VEGETATION LIMIT

REGISTERED PROFESSIONAL ENGINEER
DAVID BARTON BROOKE
NO. 70417
CIVIL
STATE OF CALIFORNIA
100% DRAFT

20' 0 20' 40'
SCALE OF FEET

DESIGNED: D. BROOKE
CADD: M. GARCIA
TECH. REVIEW: J. BLOM
DATE: 04/07/2022

SUB SHEET NO. C2.5

TITLE OF SHEET
ABANDONED LAGOON GRADING BHWWTP
REHABILITATE ASH AND BUCKEYE WASTEWATER TREATMENT PLANTS
SEQUOIA & KINGS CANYON NATIONAL PARKS

DRAWING NO. 102 / 177,507
PMIS/PKG NO. 317446
SHEET 111 OF 135

26/04/2022 12:35 MARIO GARCIA G:\CLIENTS\NPS\SEKI\317446\DRAWINGS\BUCKEY DWGS\CIVIL BUCKEYE\90 ABANDONED LAGOON GRADING BHWWTP.DWG

PLAN VIEW – LINED LAGOON GRADING BHWWTP (WEST LAGOON)

NOTES:

1. COORDINATE GRADING SEQUENCE AND CONSTRUCTION OF NEW ACCESS ROAD WITH AMWWTP PHASING DRAWINGS PH1.1, PH1.2, AND PH1.3.
2. COORDINATE BHWWTP GRADING PLAN EXPORT TO HAUL TO AMWWTP GRADING SITE. SOME ADDITIONAL IMPORT FILL MATERIAL FROM OUTSIDE THE PARK MAY BE EXPECTED.
3. MAXIMUM CUT OR FILL SLOPES 2:1
4. MINIMUM SLOPE 2% TO DRAIN.

KEYNOTES (BID OPTION):

1 RESTORE VEGETATION PER SPECIFICATIONS AND LIMITS PER PLAN.

2 INSTALL MONITORING WELL DOWN GRADIENT OF SPRAY FIELD PER SHEET D1.13. FINAL LOCATION TO BE DETERMINED BY THE C.O. IN THE FIELD.

ESTIMATED EARTH QUANTITIES CUBIC YARD (FILL FACTOR 1.3)

SOURCE	CUT	FILL	IMPORT	EXPORT
AMWWTP	2512	5920	3408	–0–
BHWWTP E LAGOON	1005	417	–0–	588
BHWWTP W LAGOON	2482	711	–0–	1771
TOTAL	5999	7048	3048	2359
OFFSITE IMPORT	(7048 – 5999) = 1049		(3048 – 2359) = 1049	

SURFACE RESTORATION

ITEM	BEGIN STA.	END STA.	AREA SF	TYPE	KEYNOTE
NEW ACCESS ROAD	N/A	N/A		ASPHALT	
N/A	N/A	N/A	N/A	CONCRETE	
VEGETATION	N/A	N/A	87090.27	VEGETATION	VEGETATION LIMIT

20' 0 20' 40'
SCALE OF FEET

REGISTERED PROFESSIONAL ENGINEER
DAVID BARTON BROOKE
NO. 70417
CIVIL
STATE OF CALIFORNIA
100% DRAFT

DESIGNED: D. BROOKE
CADD: M. GARCIA
TECH. REVIEW: J. BLOM
DATE: 04/07/2022

SUB SHEET NO. C2.6

TITLE OF SHEET
SAND BED & LAGOON GRADING BHWWTP

REHABILITATE ASH AND BUCKEYE WASTEWATER TREATMENT PLANTS
SEQUOIA & KINGS CANYON NATIONAL PARKS

DRAWING NO. 102 177,507
PMIS/PKG NO. 317446
SHEET 112 OF 135

26/04/2022 14:29 MARIO GARCIA G:\CLIENTS\NPS\SEKI\317446\DRAWINGS\BUCKEY DWGS\CIVIL BUCKEYE\91 LINED LAGOON GRADING BHWWTP.DWG

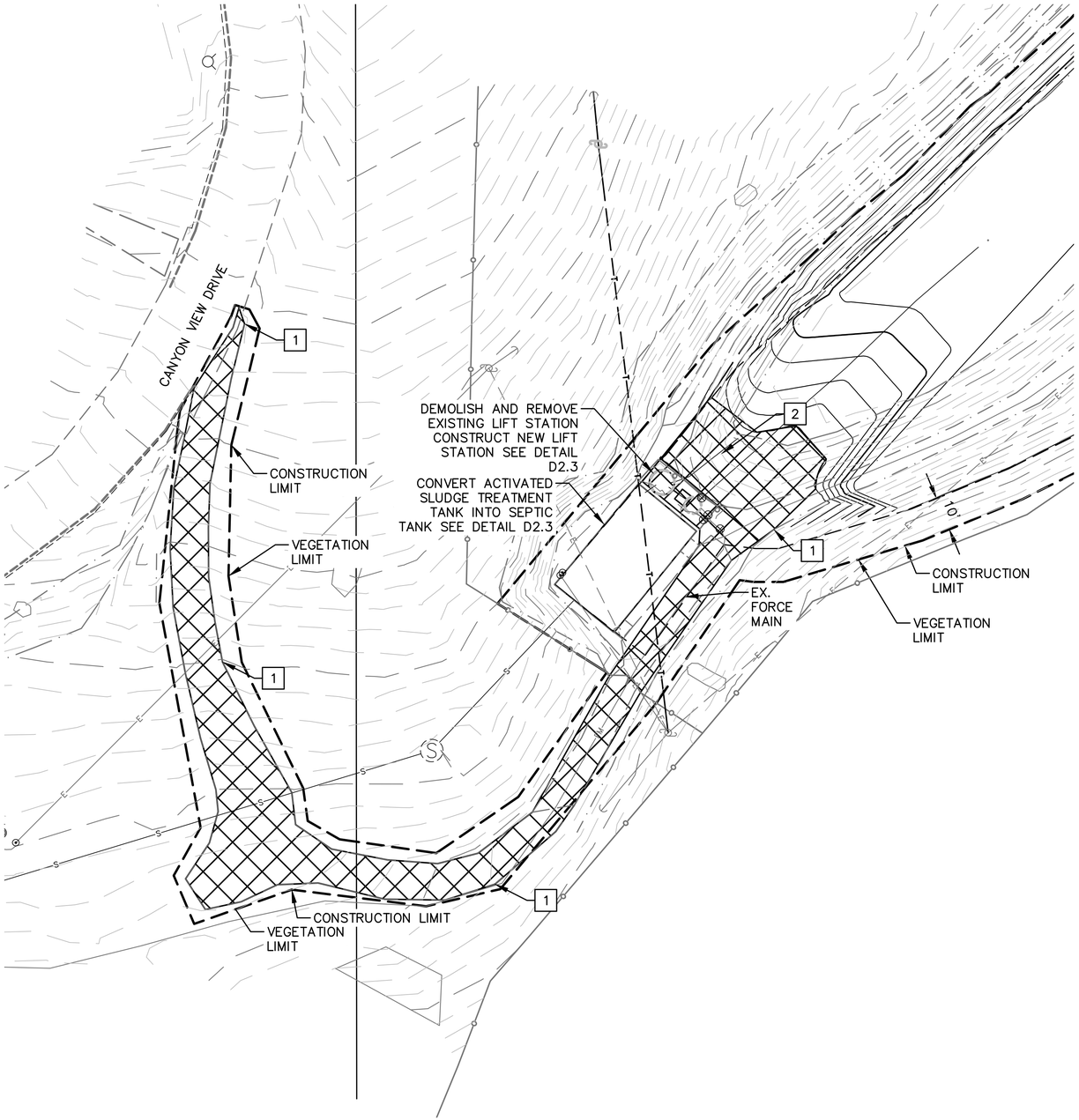

PLAN VIEW – BID OPTION SITE PAVING BHWWTP

KEYNOTES (BASE BID):

1 ALL BASE BID SITE CONSTRUCTION TO BE COMPLETED PRIOR TO BID OPTION CONSTRUCTION ACTIVITIES.

KEYNOTES (BID OPTION):

2 CONSTRUCT STRUCTURAL ROAD BASE AND PAVE WITH 4 INCHES OF ASPHALT. LIMITS OF PAVING ENDS AT TIE–IN TO CANYON VIEW DRIVE EXISTING PAVEMENT.

SURFACE RESTORATION

ITEM	BEGIN STA.	END STA.	AREA SF	TYPE	KEYNOTE
BID OPTION EXISTING ACCESS ROAD	N/A	N/A	6000	ASPHALT	2

REGISTERED PROFESSIONAL ENGINEER
DAVID BARTON BROOKE
NO. 70417
CIVIL
STATE OF CALIFORNIA
100% DRAFT

5' 0 5' 10'
SCALE OF FEET

DESIGNED: D. BROOKE CADD: M. GARCIA TECH. REVIEW: J. BLOM DATE: 04/07/2022	SUB SHEET NO. C2.7	TITLE OF SHEET BID OPTION SITE PAVING BHWWTF REHABILITATE ASH AND BUCKEYE WASTEWATER TREATMENT PLANTS SEQUOIA & KINGS CANYON NATIONAL PARKS	DRAWING NO. 102 / 177,507 PMIS/PKG NO. 317446 SHEET 113 OF 135

25/04/2022 16:27 MARIO GARCIA G:\CLIENTS\NPS\SEKI\317446\DRAWINGS\BUCKEY DWGS\CIVIL BUCKEYE\C2.7 BHWWTP SITE ACCESS ROAD BID OPTION.DWG

NOTES:

1. SEE D2.3 AND D2.4 FOR PUMP STATION DETAIL. FIELD VERIFY SEPTIC TANK OUTLET AND EXISTING FORCE MAIN TO ALIGN WITH THE PUMP STATION INLET AND OUTLET.

KEYNOTE:

1. 3" 90° DI ELBOW
2. 4' X 6.5' PRECAST CONCRETE VAULT
3. 7.5' X 6.5' PRECAST CONCRETE VAULT
4. 4' DIA. PRECAST WET WELL WITH POLYURETHANE LINING
5. 6" C900 PVC
6. 3" DI TO CONNECT WITH EXISTING FORCE MAIN
7. SEE SHEET D2.2 FOR WYE AND VENT INSTALLATION.

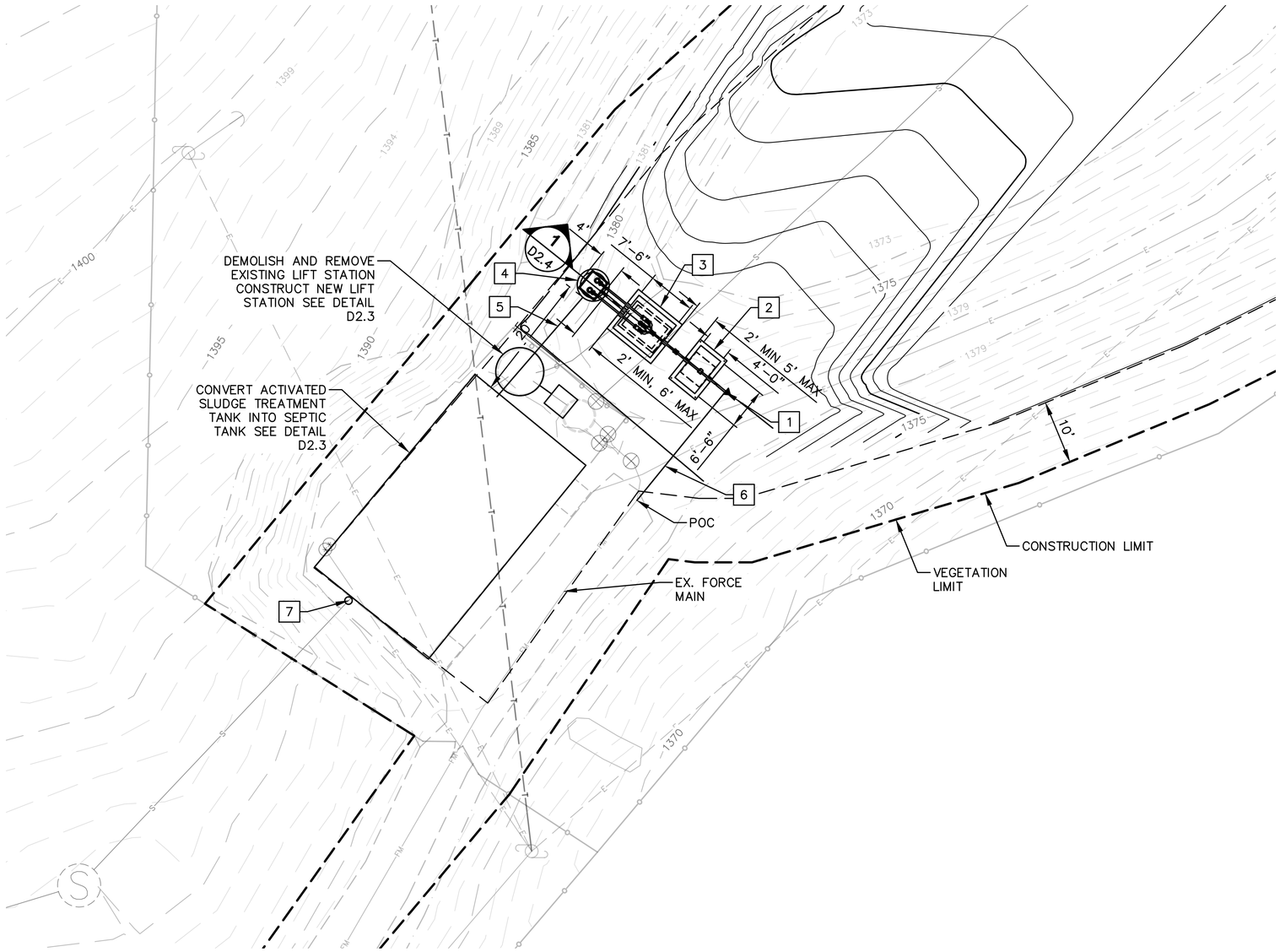

PLAN VIEW – PRIMARY TREATMENT & LIFT STATION BHWWTP

REGISTERED PROFESSIONAL ENGINEER
DAVID BARTON BROOKE
NO. 72417
100% DRAFT
CIVIL
STATE OF CALIFORNIA

5' 0 5' 10'
SCALE OF FEET

DESIGNED: D. BROOKE CADD M. GARCIA TECH. REVIEW: J. BLOM DATE: 04/07/2022	SUB SHEET NO. C2.8	TITLE OF SHEET SITE TREATMENT REHABILITATE ASH AND BUCKEYE WASTEWATER TREATMENT PLANTS SEQUOIA & KINGS CANYON NATIONAL PARKS	DRAWING NO. 102 / 177,507 PMIS/PKG NO. 317446 SHEET 114 OF 135

25/04/2022 17:00 MARIO GARCIA G:\CLIENTS\NPS\SEK\317446\DRAWINGS\BUCKEY DWGS\CIVIL BUCKEYE\93 SITE TREATMENT.DWG

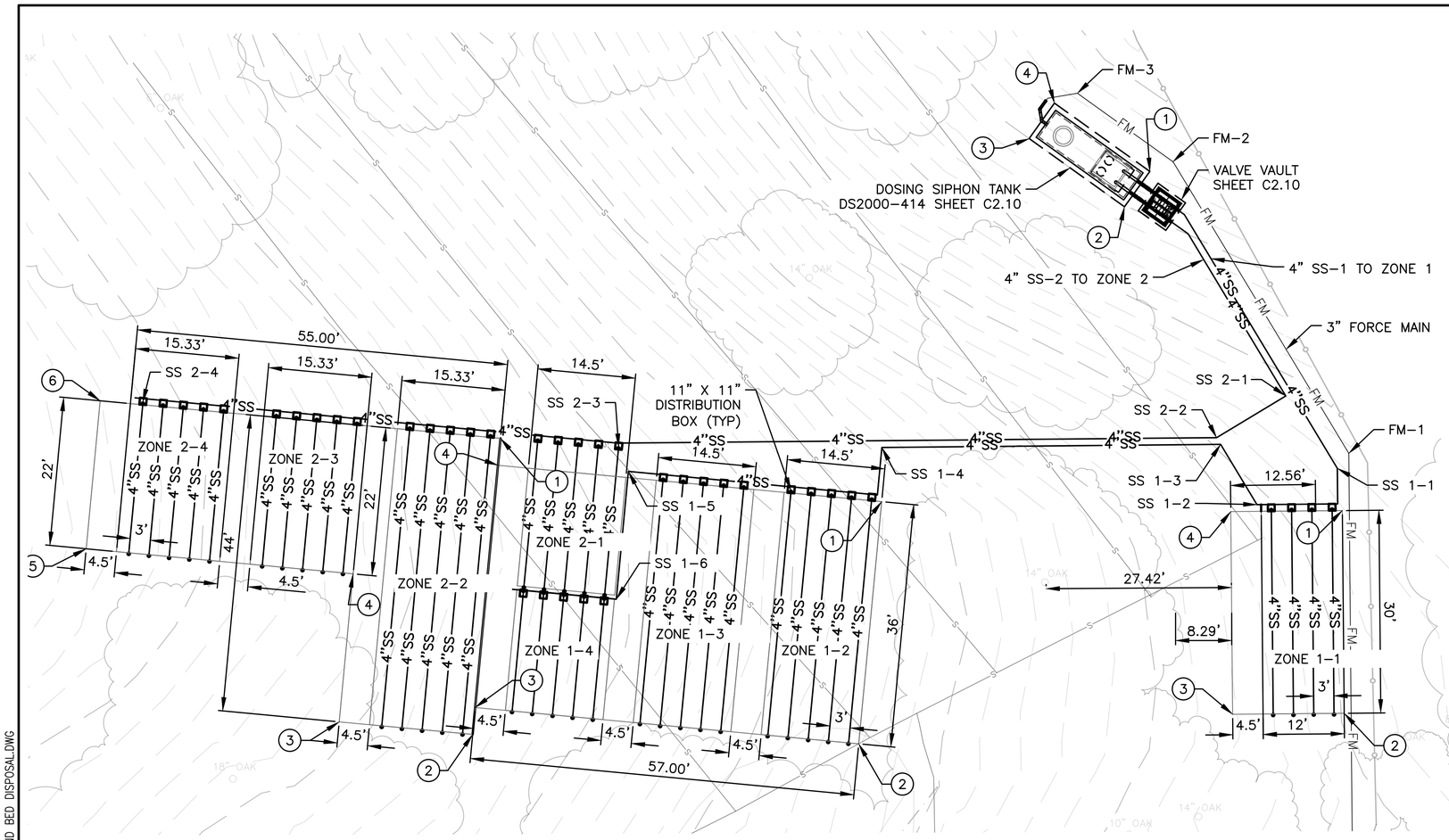

SAND BED DISPOSAL FIELD BHWWTP

NOTES:

1. COORDINATE CONSTRUCTION OF SAND BED DISPOSAL FIELD.
2. THE TWO MARKED ZONES ARE TO BE CLEANED, RAKED AND IMMEDIATELY COVERED WITH 6" LAYER NATIVE SOIL & IMPORTED SAND MIXED 50-50. SEE DETAILS IN C2.11.
3. INSTALL DOSING TANK AND VALVE VAULT. SEE C2.9 FOR DETAILS.
4. THE POSITION OF DOSING PIPING AND DISTRIBUTION BOXES SHOULD BE LOCATED ACCORDING TO THE COORDINATION TABLE AND SAND BED DIMENSIONS.
5. SEE SAND BED SECTION DETAILS ON C2.11 AND D2.5.

COORDINATE TABLE

POINT	NORTHING	EASTING	FG ELEV.	NOTE
3" FORCE MAIN	DESIGNATED AS FM-1, FM-2 AND FM-3			
FM-1	2058379.09	6608338.43	1403.6700	PIPING
FM-2	2058422.25	6608312.43	1413.0500	PIPING
FM-3	2058432.34	6608298.28	1413.25	PIPING
SIPHON DOSING TANK	SEE C2.9 FOR DETAILS			
1	2058420.83	6608309.00	1412.06	FOOTING EDGE
2	2058415.59	6608305.25	1409.92	FOOTING EDGE
3	2058425.70	6608291.14	1410.00	FOOTING EDGE
4	2058430.93	6608294.89	1412.19	FOOTING EDGE
VALVE VAULT	2058415.59	6608310.79	1410.77	CENTER, SEE C2.10 FOR DETAILS
4" SS TO ZONE 1	DESIGNATED AS SS 1-1 TO SS 1-6			
SS 1-1	2058376.88	6608336.74	1402.81	PIPING
SS 1-2	2058371.51	6608324.84	1399.46	PIPING
SS 1-3	2058380.43	6608319.47	1400.25	PIPING
SS 1-4	2058379.97	6608269.37	1390.38	PIPING
SS 1-5	2058376.43	6608231.86	1381.70	PIPING
SS 1-6	2058357.51	6608230.07	1379.68	PIPING
4" SS TO ZONE 2	DESIGNATED AS SS 2-1 TO SS 2-4			
SS 2-1	2058387.59	6608329.11	1404.00	PIPING
SS 2-2	2058381.42	6608318.87	1400.33	PIPING
SS 2-3	2058380.00	6608230.42	1382.00	CONNECT TO DISTRIBUTION BOX
SS 2-4	2058386.46	6608160.04	1368.98	CONNECT TO DISTRIBUTION BOX
ZONE 1-1	SEE C2.10 FOR DETAILS.			
1	2058370.63	6608337.47	1401.92	SEE SAND BED DETAILS ON C2.10 AND D2.5
2	2058340.63	6608337.75	1400.09	
3	2058340.48	6608321.25	1396.88	
4	2058370.48	6608320.97	1398.51	

DISTRIBUTION LATERAL INVERT ELEVATIONS

BED	NUMBER OF LATERALS	LATERAL INVERT ELEVATION	BED AREA (SF)
ZONE 1-1	4	1401.00	360
ZONE 1-2	5	1388.00	522
ZONE 1-3	5	1384.00	522
ZONE 1-4	5	1381.00	261
ZONE 2-1	5	1381.00	319
ZONE 2-2	5	1377.00	675
ZONE 2-3	5	1374.00	337
ZONE 2-4	5	1371.00	337
			TOTAL = 3333

COORDINATE TABLE

POINT	NORTHING	EASTING	FG ELEV.	NOTE
MIXED ZONE (57' X 36')	DESIGNATED AS ZONE 1-2; ZONE 1-3; ZONE 1-4; ZONE 2-1			
1	2058371.95	6608269.33	1388.52	SEE SAND BED DETAILS ON C2.10 AND D2.5
2	2058336.08	6608265.92	1387.95	
3	2058341.49	6608209.21	1377.28	
4	2058377.33	6608212.57	1377.51	
LEFTOVER ZONE 2	DESIGNATED AS ZONE 2-2; ZONE 2-3; ZONE 2-4			
1	2058381.31	6608212.95	1378.07	SEE SAND BED DETAILS ON C2.10 AND D2.5
2	2058337.51	6608208.83	1377.54	
3	2058339.36	6608189.09	1374.67	
4	2058361.27	6608191.15	1373.68	
5	2058364.98	6608151.66	1367.47	
6	2058386.88	6608153.72	1367.97	

REGISTERED PROFESSIONAL ENGINEER
DAVID BARTON BROOKE
NO. 70417
CIVIL
STATE OF CALIFORNIA
DRAFT
100%

10' 0 10' 20'
SCALE OF FEET

DESIGNED: D. BROOKE CADD M. GARCIA TECH. REVIEW: J. BLOM DATE: 04/07/2022	SUB SHEET NO. C2.9	TITLE OF SHEET SAND BED DISPOSAL BHWWTF REHABILITATE ASH AND BUCKEYE WASTEWATER TREATMENT PLANTS SEQUOIA & KINGS CANYON NATIONAL PARKS	DRAWING NO. 102 / 177,507 PMIS/PKG NO. 317446 SHEET 115 OF 135

26/04/2022 13:54 MARIO GARCIA G:\CLIENTS\NPS\SEKI\317446\DRAWINGS\BUCKEY DWGS\CIVIL BUCKEYE\94 SAND BED DISPOSAL.DWG

NOTES:

1. INSTALL THE DOSING SIPHON TANK (DS2000-412), TWO 4" THREE-WAY VALVES IN A NEW 4' X 4' VALVE VAULT, DISTRIBUTION BOXES AND PIPING.
2. DISTRIBUTION BOX INLET/OUTLETS AT SAME ELEVATION. TRENCH OUTLETS SET 2" BELOW INLET/OUTLET ELEV.
3. MANUALLY CONTROL THE THREE-WAY VALVES TO KEEP EFFLUENT FROM FLOWING INTO THE SAME DISPOSAL FIELD IN WINTER AND TO BOTH FIELDS IN SUMMER.

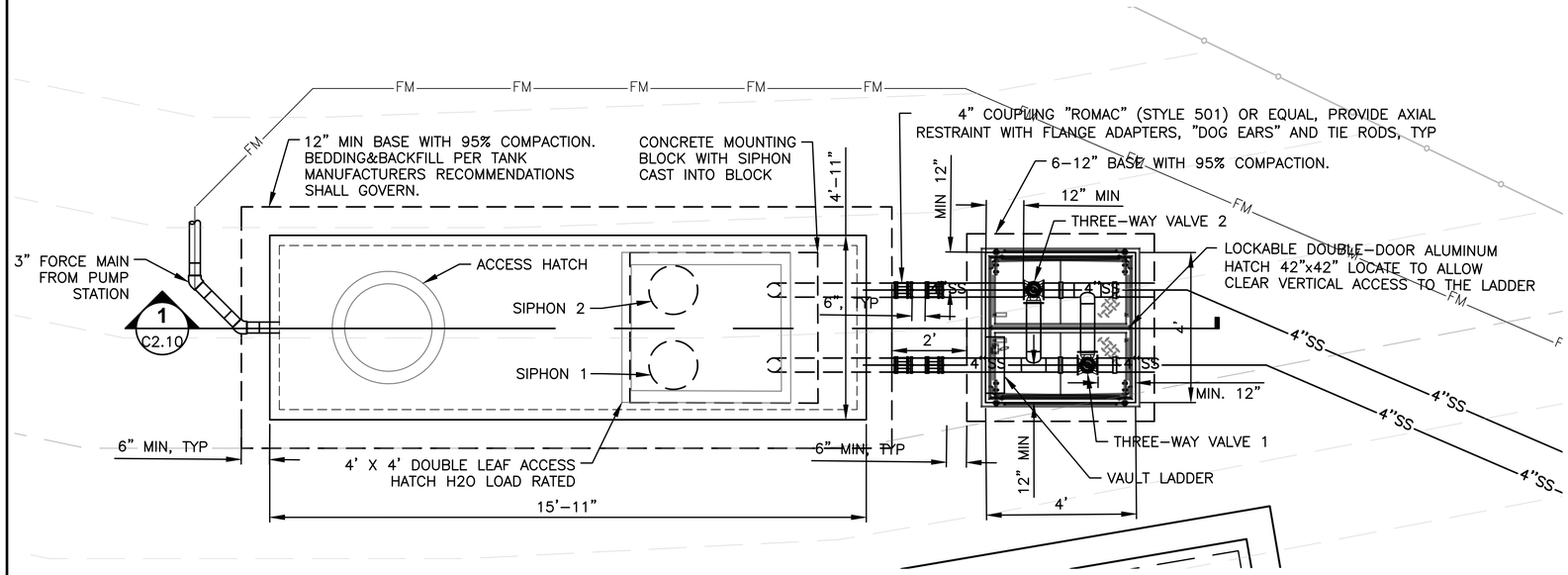

PLAN VIEW – DOSING SIPHON TANK AND VALVE VAULT

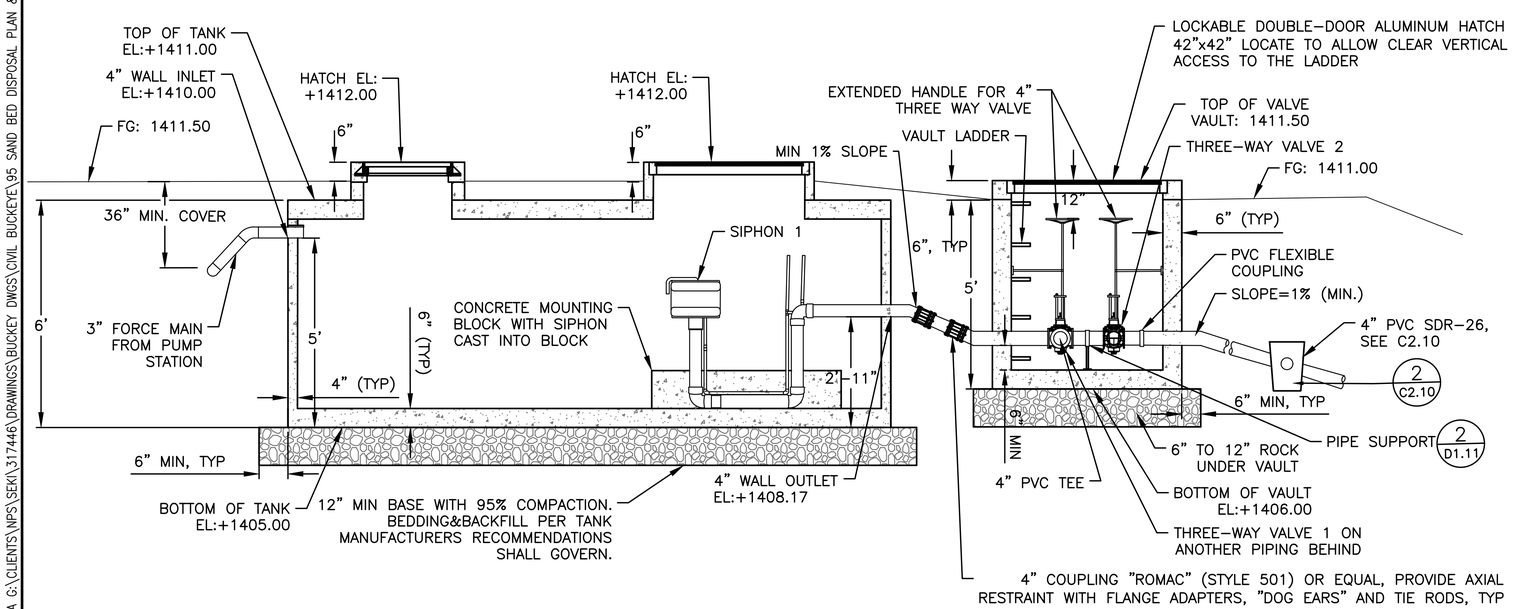

1 SECTION VIEW OF DOSING SIPHON TANK AND VALVE VAULT

SCALE: NTS

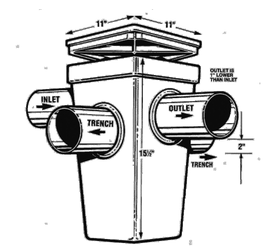

2 DISTRIBUTION BOX

SCALE: NTS

1. DROP BOX TO THE "TUF-TITE" MODEL DB02 OR APPROVED EQUAL.
2. DISTRIBUTION BOX TO BE "TUF-TITE" MODEL 4HD2 OR APPROVED EQUAL.
3. ADD RISERS AS NEEDED TO SET RIM 2"-3" ABOVE FINISHED GRADE.

REGISTERED PROFESSIONAL ENGINEER
DAVID BARTON BROOKE
NO. 77417
CIVIL
STATE OF CALIFORNIA
100% DRAFT

DESIGNED: D. BROOKE CADD M. GARCIA TECH. REVIEW: J. BLOM DATE: 04/07/2022	SUB SHEET NO. C2.10	TITLE OF SHEET SAND BED DISPOSAL DOSING SIPHON BHWWTF REHABILITATE ASH AND BUCKEYE WASTEWATER TREATMENT PLANTS SEQUOIA & KINGS CANYON NATIONAL PARKS	DRAWING NO. 102 / 177,507 PMIS/PKG NO. 317446 SHEET 116 OF 135

25/04/2022 16:28 MARIO GARCIA G:\CLIENTS\NPS\SEKI\317446\DRAWINGS\BUCKEY DWGS\CIVIL BUCKEYE\95 SAND BED DISPOSAL PLAN & PROFILE.DWG

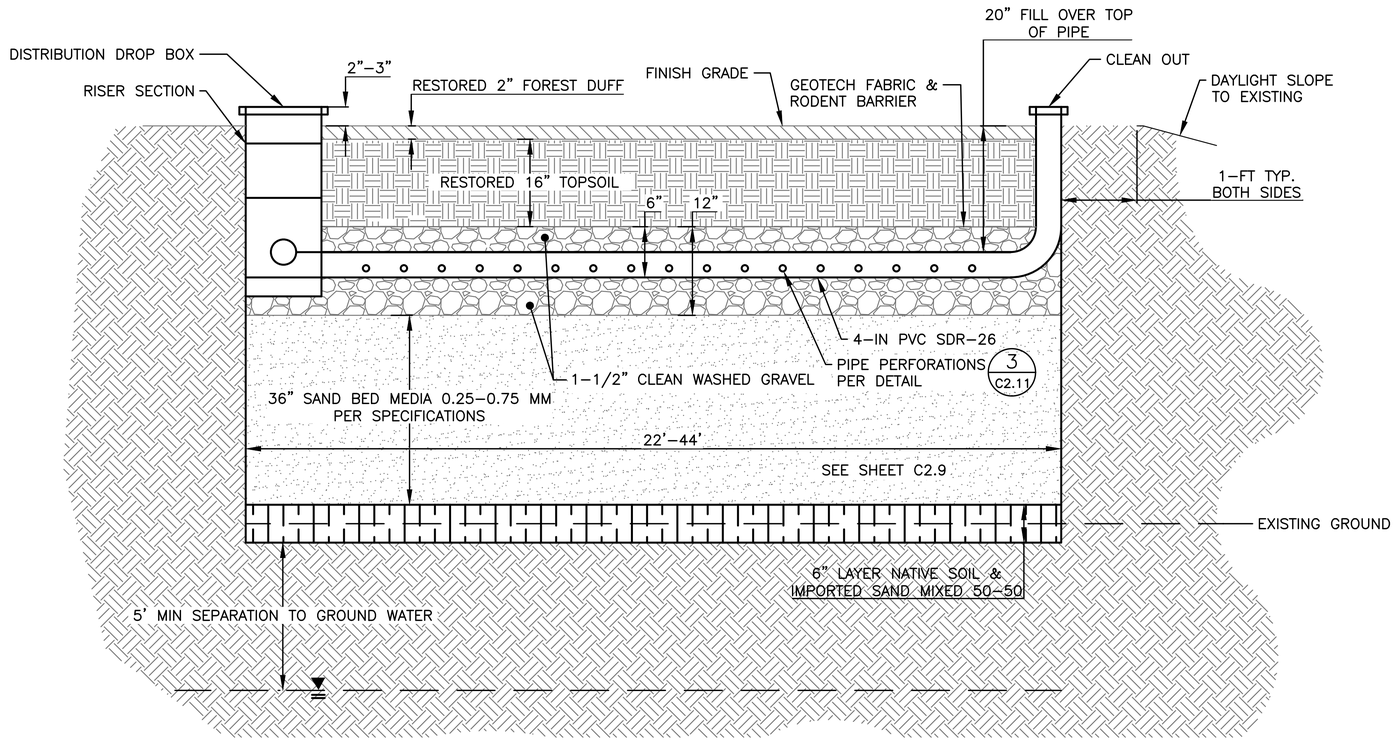

1 / 2.11 DRAIN FIELD DISTRIBUTION SYSTEM PROFILE
NTS

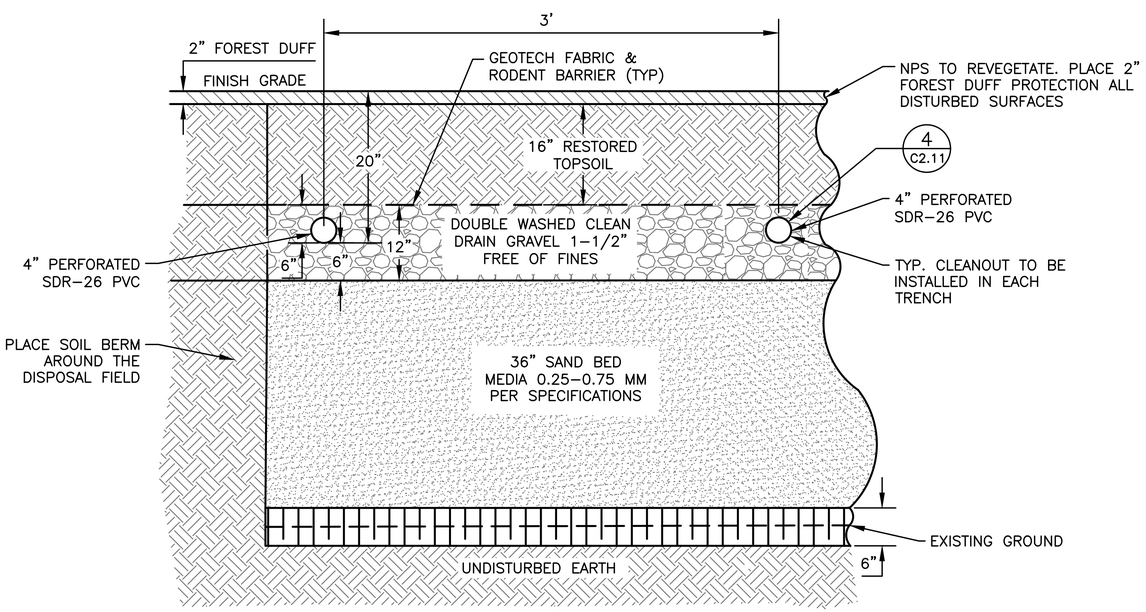

2 / C2.11 TYPICAL DRAIN FIELD SECTION
NTS

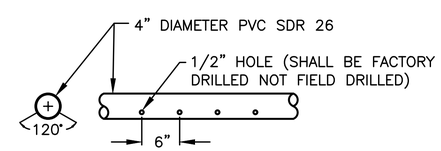

3 / C2.11 PERFORATED PIPE
NTS

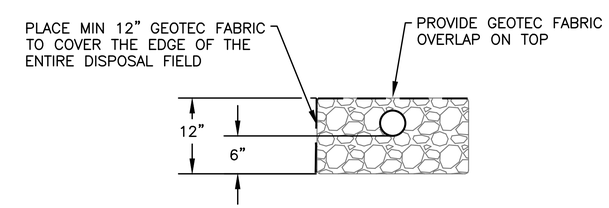

4 / C2.11 FILTER FABRIC
NTS

REGISTERED PROFESSIONAL ENGINEER
DAVID BARTON BROOKE
NO. 70417
CIVIL
STATE OF CALIFORNIA
100% DRAFT

DESIGNED: D. BROOKE CADD M. GARCIA TECH. REVIEW: J. BLOM DATE: 04/07/2022	SUB SHEET NO. C2.11	TITLE OF SHEET DRAINFIELD TRENCH DETAIL REHABILITATE ASH AND BUCKEYE WASTEWATER TREATMENT PLANTS SEQUOIA & KINGS CANYON NATIONAL PARKS	DRAWING NO. 102/177,507 PMIS/PKG NO. 317446 SHEET 117 OF 135

26/04/2022 13:30 MARIO GARCIA G:\CLIENTS\NPS\SEKI\317446\DRAWINGS\BUCKEY DWGS\CIVIL BUCKEYE\96 DRAINFIELD TRENCH DETAIL.DWG

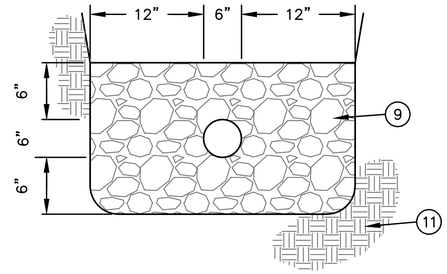

SECTION B-B

LEGEND:

1. 4 – 1" DIA. HOLES ON 3 1/2" RADIUS.
2. MECHANICAL PLUG.
3. 12" DIA. x 12" PVC, DIP OR CP.
4. FIBER JOINT MATERIAL.
5. PIPE MATERIAL TO MATCH SERVICE LATERAL.
6. 45° LONG SWEEP BENDS.
7. "Y" FITTINGS.
8. EXISTING OR NEW PIPE. BEDDING MATERIAL.
9. MISSION COUPLER OR APPROVED SUBSTITUTION.
10. (PVC); ELECTROFUSED (HDPE)
11. UNDISTURBED MATERIAL.

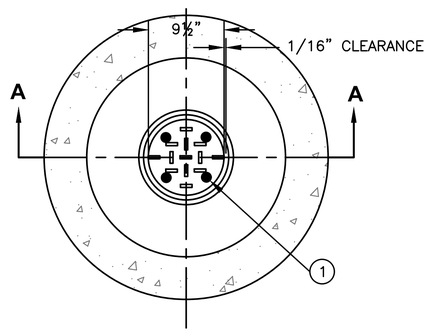

PLAN

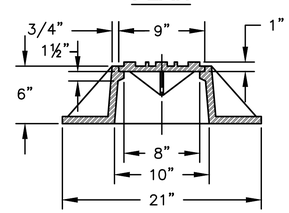

SECTION A-A
CAST IRON RING AND COVER

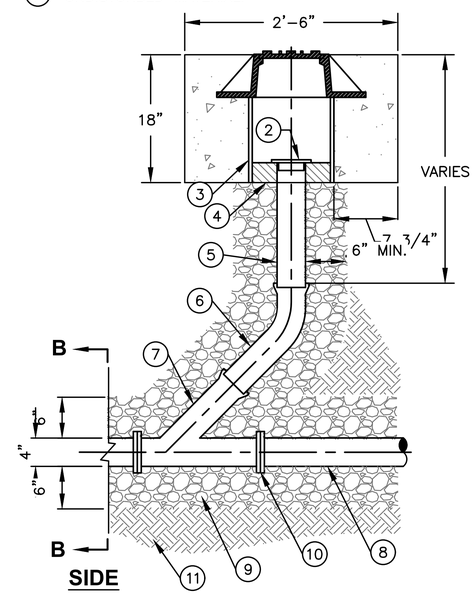

SIDE

1 D2.1 TYPICAL CLEANOUT DETAIL
SCALE: NTS

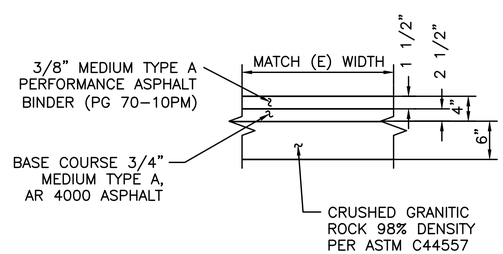

NOTES:

1. SUBMIT HVEEM MIX DESIGN PRIOR TO CONSTRUCTION.
2. BASE AGGREGATES ARE REQUIRED TO BE FRACTURED SIERRA GRANITE, WHICH MEETS THE CALTRANS CLASS II BASE AGGREGATE SPEC.

2 D2.1 REPLACEMENT ASPHALT SECTION
SCALE: NTS

REGISTERED PROFESSIONAL ENGINEER
DAVID BARTON BROOKE
NO. 70417
CIVIL
STATE OF CALIFORNIA
100% DRAFT

DESIGNED: D. BROOKE CADD M. GARCIA TECH. REVIEW: J. BLOM DATE: 04/07/2022	SUB SHEET NO. D2.1	TITLE OF SHEET GENERAL DETAILS BHWWTP REHABILITATE ASH AND BUCKEYE WASTEWATER TREATMENT PLANTS SEQUOIA & KINGS CANYON NATIONAL PARKS	DRAWING NO. 102 / 177,507 PMIS/PKG NO. 317446 SHEET 118 OF 135

25/04/2022 15:48 MARIO GARCIA G:\CLIENTS\NPS\SEKI\317446\DRAWINGS\BUCKEY DWGS\DETAILS BUCKEYE\97 GENERAL DETAILS BHWWTP.DWG

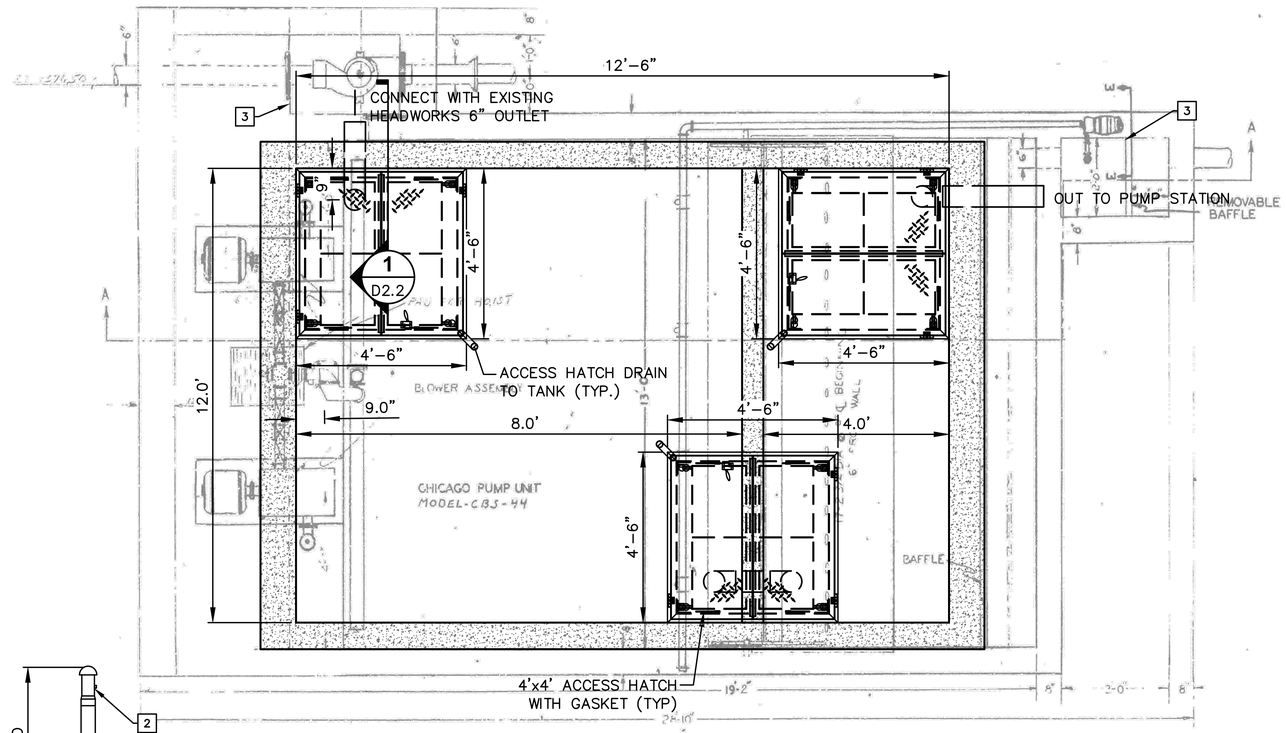

PLAN VIEW – 4200 GALLON SEPTIC TANK BHWWTP
NTS

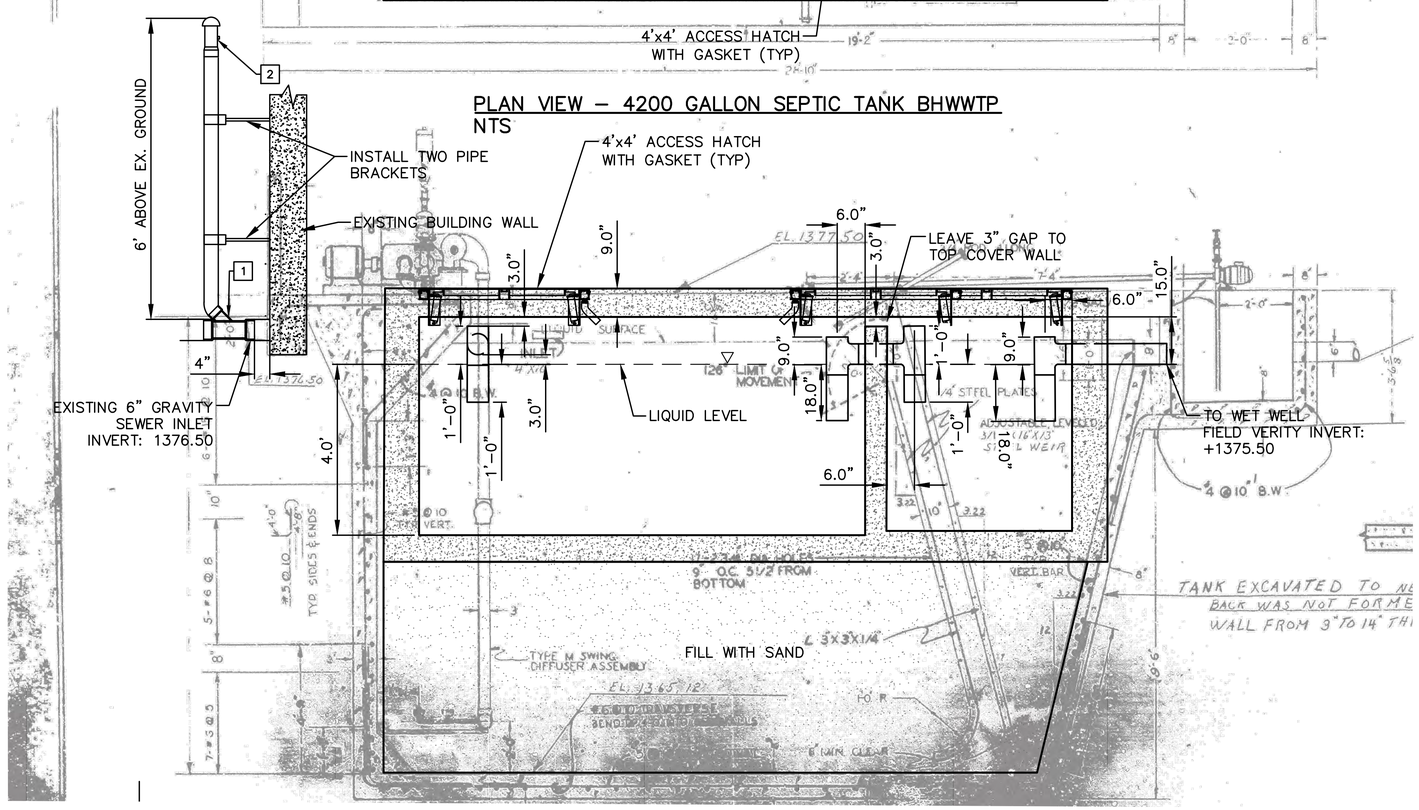

SECTION VIEW– 4200 GALLON SEPTIC TANK BHWWTP
NTS

NOTES:

1. COORDINATE CONSTRUCTION OF SEPTIC TANK WITH PHASING DRAWING PH2.1.
2. CONSTRUCT TWO COMPARTMENTS INCLUDING SIDE WALLS, PARTITION WALL AND TOP COVER WALL. LEAVE 3" GAP BETWEEN PARTITION WALL AND TOP COVER WALL.
3. INSTALL THREE 4' X 4' ACCESS HATCHES (BILCO JD-2AL) WITH GASKET AND FALL PROTECTION GRATING ON TOP OF THE NEW SEPTIC TANK. THE ACCESS DRAIN CAN BE REMOVED.
4. INSTALL 6" SCHEDULE 40 PVC INLET, PARTITION, OUTLET PIPE AND CARBON ODOR FILTER FOR THE NEW SEPTIC TANK. FIELD VERITY SEPTIC TANK OUTLET INVERT ELEVATION.
5. INSTALL VENT PIPE 6' ABOVE THE EX. GROUND.
6. CONNECT SEPTIC INLET WITH EXISTING HEADWORKS OUTLET. SEE S2.1 FOR STRUCTURAL DETAILS.

KEYNOTE:

1. INSTALL 6" X6"X 4" PVC WYE AND VERTICAL PVC PIPING ATTACHED TO OUTSIDE BUILDING WALL.
2. INSTALL PASSIVE PACKAGE ACTIVATED CARBON SEPTIC VENT ODOR FILTER SYSTEM (4" WOLVERINE BRAND LINEAR ACTIVATED CARBON SEPTIC VENT ODOR FILTER OR EQUAL).
3. SEAL AROUND METAL COVER WITH NEOPRENE GASKET.

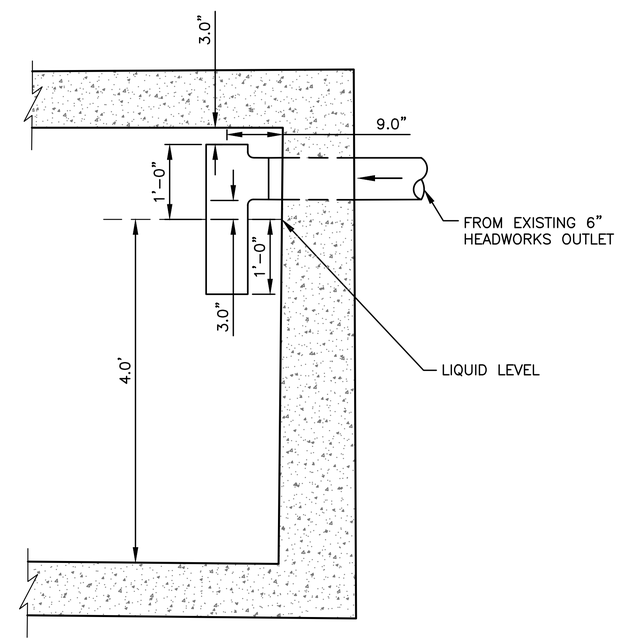

1 **SECTION VIEW OF SEPTIC TANK INLET**
SCALE: NTS

REGISTERED PROFESSIONAL ENGINEER
DAVID BARTON BROOKE
NO. 72417
CIVIL
STATE OF CALIFORNIA
100% DRAFT

DESIGNED: D. BROOKE	SUB SHEET NO.	TITLE OF SHEET	DRAWING NO.
CADD M. GARCIA	D2.2	SEPTIC TANK BHWWTP	102 / 177,507
TECH. REVIEW: J. BLOM		REHABILITATE ASH AND BUCKEYE WASTEWATER TREATMENT PLANTS SEQUOIA & KINGS CANYON NATIONAL PARKS	PMIS/PKG NO. 317446
DATE: 04/07/2022			SHEET 119 OF 135

26/04/2022 11:29 MARIO GARCIA G:\CLIENTS\NPS\SEKI\317446\DRAWINGS\BUCKEY DWGS\DETAILS BUCKEYE\98 SEPTIC TANK BHWWTP.DWG

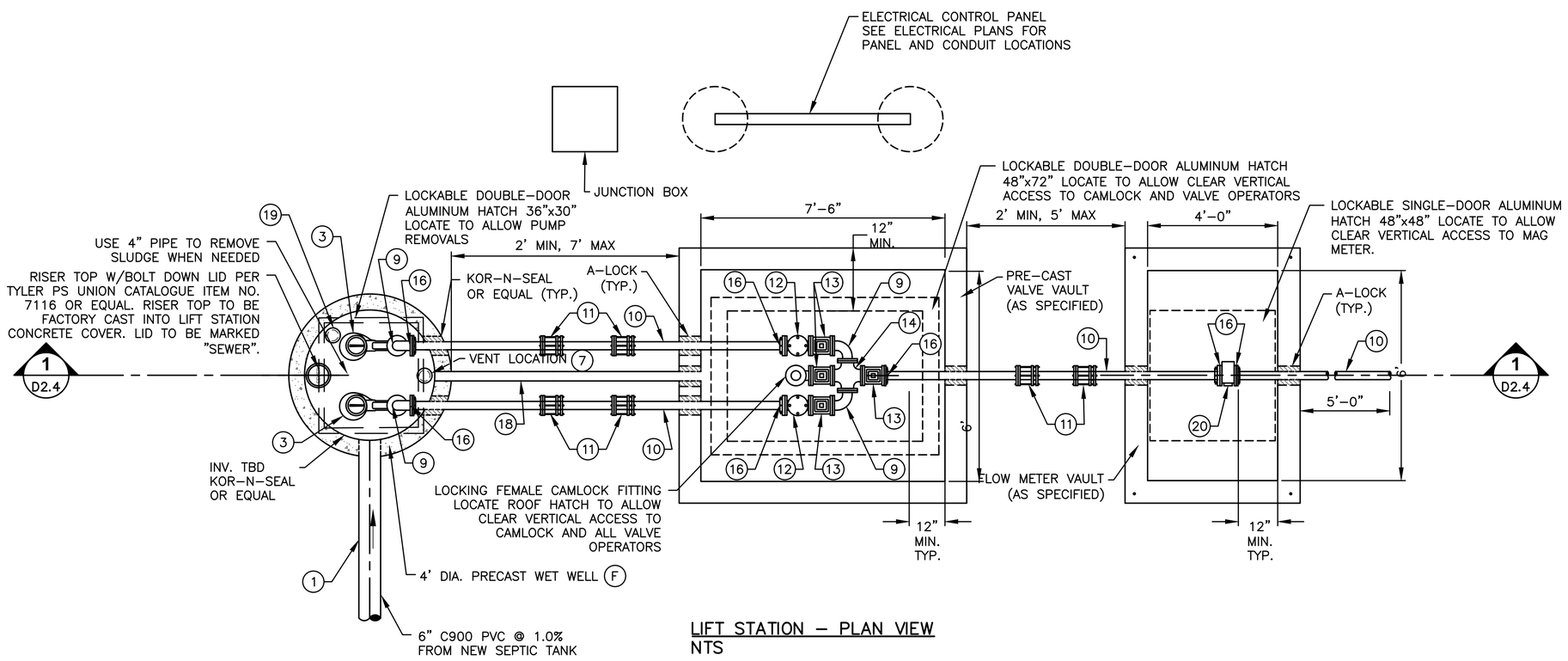

LIFT STATION – PLAN VIEW
NTS

NOTES:

1. EXCEPT AS NOTED, ALL PIPE IS DUCTILE IRON CL-52 CONFORMING TO ALL RELEVANT AWWA STANDARDS. EXTERNAL COATING; ASPHALTIC COATING, 0.025 mm (1 MIL) THICK MINIMUM. INTERNAL COATING; PROTECTO 401 CERAMIC EPOXY COATING, 1mm (40 MILS) THICK.
2. ALL PIPE PENETRATIONS THROUGH MANHOLE WALL SHALL BE WITH "A-LOK" WATERTIGHT MANHOLE ADAPTERS OR AS SPECIFIED.
3. CONNECT PUMP GUIDE RAIL(S) AND PUMP SUPPORTS TO MANHOLE IN ACCORDANCE WITH MANUFACTURER'S INSTALLATION INSTRUCTIONS.
4. ALL ANCHOR BOLTS & SHIMS SHALL BE STAINLESS STEEL.
5. ALL METAL IN WET WELL SHALL BE STAINLESS STEEL.
6. ALL VAULTS, STORAGE TANK AND WET WELL SHALL BE WATERTIGHT HS-20 RATED. EPOXY LINE INTERIOR OF WET.
7. FORCED MAIN SEPARATION DETERMINED BY VALVE ASSEMBLY. COORDINATE WITH PUMP RAIL MANUFACTURER ON SEPARATION OF PUMP AND GUIDE RAIL ASSEMBLY.
8. CONTRACTOR SHALL DETERMINE SIZE OF VAULTS REQUIRED TO ACHIEVE MINIMUM CLEARANCES SHOWN BASED ON SPECIFIC COMPONENTS FURNISHED AND INSTALLED.

KEY NOTES:

1. NEW GRAVITY SEWER INLET PIPE (EL: +1375.0)
2. NOT USED
3. SUBMERSIBLE PUMP
4. NOT USED
5. NOT USED
6. NOT USED
7. 3" – "GOOSE NECK" VENT WITH CARBON FILTER
8. NOT USED
9. 90° D.I. ELBOW FLxFL
10. 3" D.I. DISCHARGE PIPE
11. COUPLING "ROMAC" (STYLE 501) OR EQUAL, PROVIDE AXIAL RESTRAINT WITH FLANGE ADAPTERS, "DOG EARS" AND TIE RODS
12. 3" CHECK VALVE FLxFL
13. 3" PLUG VALVE
14. CROSS FL ADD SPOOLS BETWEEN CROSS AND ADJACENT FITTINGS FOR FIELD BOLT-UP AS NECESSARY, ADJUST DIMENSIONS OF VAULT AS REQUIRED
15. NOT USED
16. FLANGE ADAPTER, "EBBA IRON" (SERIES 1000) OR EQUAL
17. NOT USED
18. 2" – SCH. 80 PVC VAULT DRAIN WITH "P" TRAP
19. 1" – SCH. 80 PVC PIPE FOR ATTACHMENT OF PUMP CONTROL FLOATS
20. 3" FLOW METER

REGISTERED PROFESSIONAL ENGINEER
DAVID BARTON BROOKE
NO. 69417
CIVIL
STATE OF CALIFORNIA
100% DRAFT

DESIGNED: D. BROOKE	SUB SHEET NO.	TITLE OF SHEET	DRAWING NO.
CADD M. GARCIA	D2.3	LIFT STATION PLAN BHWWTP	102 / 177,507
TECH. REVIEW: J. BLOM		REHABILITATE ASH AND BUCKEYE WASTEWATER TREATMENT PLANTS SEQUOIA & KINGS CANYON NATIONAL PARKS	PMIS/PKG NO. 317446
DATE: 04/07/2022			SHEET 120 OF 135

26/04/2022 14:36 MARIO GARCIA G:\CLIENTS\NPS\SEKI\317446\DRAWINGS\BUCKEY DWGS\DETAILS BUCKEYE\99 LIFT STATION PLAN BHWWTP.DWG

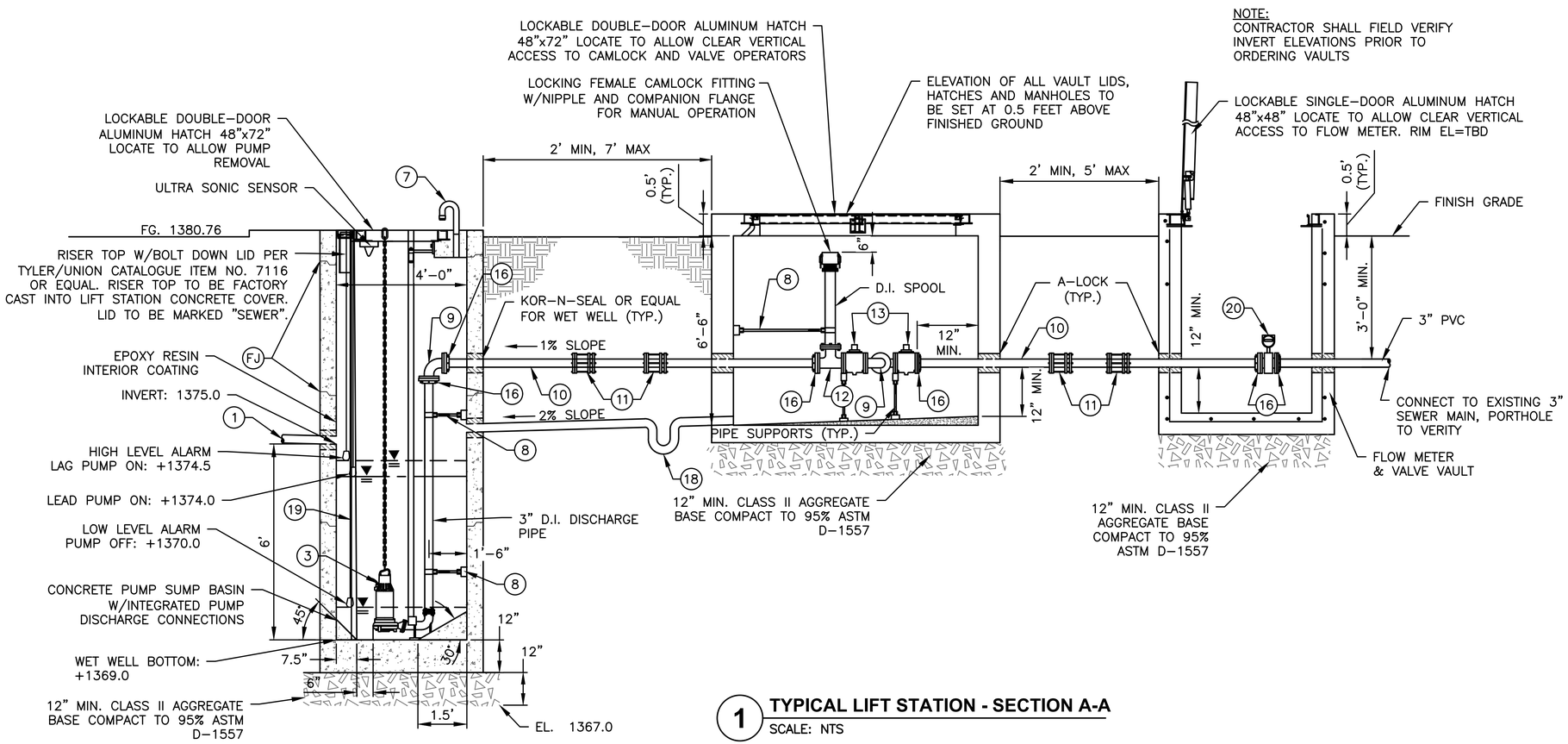

1 TYPICAL LIFT STATION - SECTION A-A

SCALE: NTS

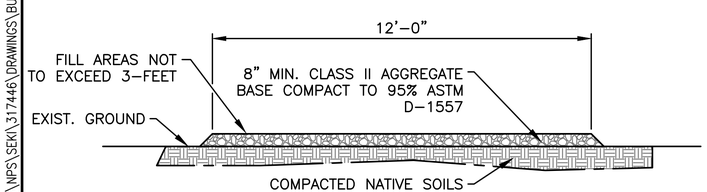

CONSTRUCTION ACCESS ROAD SECTION

NTS

NOTES:

1. EXCEPT AS NOTED, ALL PIPE IS DUCTILE IRON CL-52 CONFORMING TO ALL RELEVANT AWWA STANDARDS. EXTERNAL COATING; ASPHALTIC COATING, 0.025 mm (1 MIL) THICK MINIMUM. INTERNAL COATING; PROTECTO 401 CERAMIC EPOXY COATING, 1mm (40 MILS) THICK.
2. ALL PIPE PENETRATIONS THROUGH MANHOLE WALL SHALL BE WITH "A-LOK" WATERTIGHT MANHOLE ADAPTERS OR AS SPECIFIED.
3. CONNECT PUMP GUIDE RAIL(S) AND PUMP SUPPORTS TO MANHOLE IN ACCORDANCE WITH MANUFACTURER'S INSTALLATION INSTRUCTIONS.
4. ALL ANCHOR BOLTS & SHIMS SHALL BE STAINLESS STEEL.
5. ALL METAL IN WET WELL SHALL BE STAINLESS STEEL.
6. ALL VAULTS, STORAGE TANK AND WET WELL SHALL BE WATERTIGHT HS-20 RATED. EPOXY LINE INTERIOR OF WET.
7. FORCED MAIN SEPARATION DETERMINED BY VALVE ASSEMBLY. COORDINATE WITH PUMP RAIL MANUFACTURER ON SEPARATION OF PUMP AND GUIDE RAIL ASSEMBLY.
8. CONTRACTOR SHALL DETERMINE SIZE OF VAULTS REQUIRED TO ACHIEVE MINIMUM CLEARANCES SHOWN BASED ON SPECIFIC COMPONENTS FURNISHED AND INSTALLED.
9. FILL AREAS NOT TO EXCEED 3-FEET DEPTH AT ANY POINT.

KEY NOTES:

1. NEW GRAVITY SEWER INLET PIPE (INVERT EL: +1375.0)
2. NOT USED
3. SUBMERSIBLE PUMP
4. NOT USED
5. NOT USED
6. NOT USED
7. 4" – "GOOSE NECK" VENT WITH CARBON FILTER
8. PIPE SUPPORT 2/D1.11
9. 90° D.I. ELBOW FLxFL
10. 3" D.I. DISCHARGE PIPE
11. COUPLING "ROMAC" (STYLE 501) OR EQUAL, PROVIDE AXIAL RESTRAINT WITH FLANGE ADAPTERS, "DOG EARS" AND TIE RODS
12. 3" CHECK VALVE FLxFL
13. 3" PLUG VALVE
14. NOT USED
15. NOT USED
16. FLANGE ADAPTER, "EBBA IRON" (SERIES 1000) OR EQUAL
17. NOT USED
18. 2" – SCH. 80 PVC VAULT DRAIN WITH "P" TRAP
19. 1" – SCH. 80 PVC PIPE FOR ATTACHMENT OF PUMP CONTROL FLOATS
20. 3" MAGNETIC FLOW METER (UM06) WITH TRANSMITTER

REGISTERED PROFESSIONAL ENGINEER
DAVID BARTON BROOKE
NO. 72417
CIVIL
STATE OF CALIFORNIA
100% DRAFT

DESIGNED: D. BROOKE	SUB SHEET NO.	TITLE OF SHEET	DRAWING NO.
CADD M. GARCIA	D2.4	LIFT STATION SECTION BHWWTP	102 / 177,507
TECH. REVIEW: J. BLOM		REHABILITATE ASH AND BUCKEYE WASTEWATER TREATMENT PLANTS SEQUOIA & KINGS CANYON NATIONAL PARKS	PMIS/PKG NO. 317446
DATE: 04/07/2022			SHEET 121 OF 135

26/04/2022 14:36 MARIO GARCIA G:\CLIENTS\NPS\SEKI\317446\DRAWINGS\BUCKEY DWGS\DETAILS BUCKEYE\99 LIFT STATION PLAN BHWWTP.DWG

NOTES:

1. COORDINATE CONSTRUCTION OF SAND BED DISPOSAL WITH PHASING DRAWING PH2.1.
2. CONSTRUCT SAND BED DISPOSAL PER SHEET C2.11.

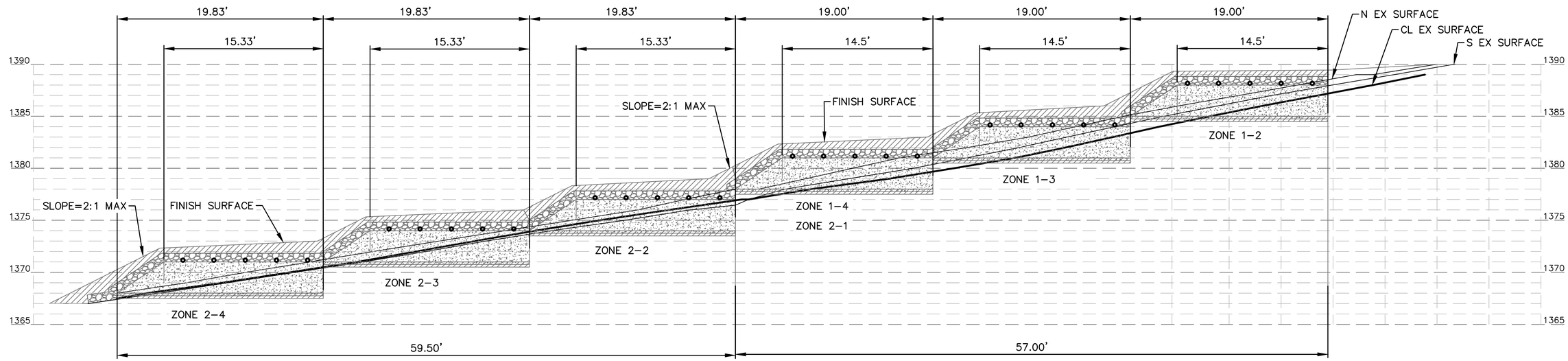

SAND BED DISPOSAL BHWWTP SECTION VIEW

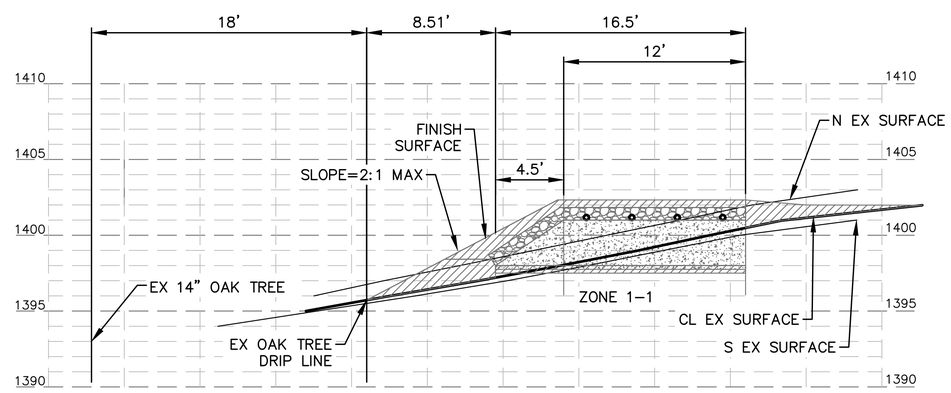

SAND BED DISPOSAL BHWWTP SECTION VIEW

REGISTERED PROFESSIONAL ENGINEER
DAVID BARTON BROOKE
NO. 70417
100% DRAFT
CIVIL
STATE OF CALIFORNIA

5' 0 5' 10'
SCALE OF FEET

DESIGNED: D. BROOKE CADD M. GARCIA TECH. REVIEW: J. BLOM DATE: 04/07/2022	SUB SHEET NO. D2.5	TITLE OF SHEET SAND BED DISPOSAL SECTION BHWWTP REHABILITATE ASH AND BUCKEYE WASTEWATER TREATMENT PLANTS SEQUOIA & KINGS CANYON NATIONAL PARKS	DRAWING NO. 102 / 177,507 PMIS/PKG NO. 317446 SHEET 122 OF 135

26/04/2022 13:32 MARIO GARCIA G:\CLIENTS\NPS\SEKI\317446\DRAWINGS\BUCKEY DWGS\DETAILS BUCKEYE\101 SAND BED DISPOSAL BHWWTP.DWG

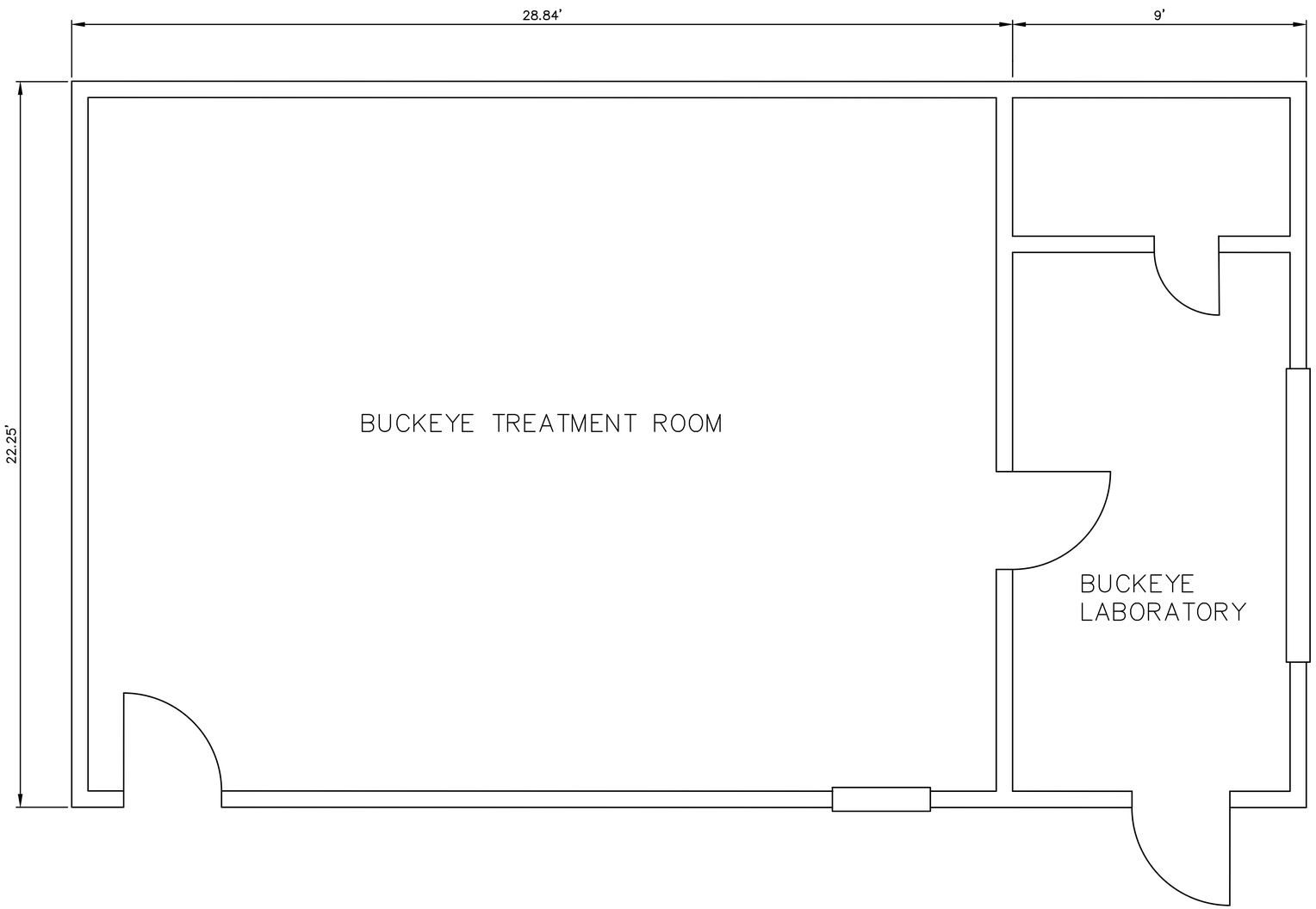

CONTROL BUILDING FLOOR PLAN–BHWWTP

2' 0 2' 4'
SCALE OF FEET

REGISTERED PROFESSIONAL ENGINEER
DAVID BARTON BROOKE
NO. 72417
100% DRAFT
CIVIL
STATE OF CALIFORNIA

DESIGNED: D. BROOKE CADD M. GARCIA TECH. REVIEW: J. BLOM DATE: 04/07/2022	SUB SHEET NO. A2.1	TITLE OF SHEET CONTROL BUILDING FLOOR PLAN–BHWWTP REHABILITATE ASH AND BUCKEYE WASTEWATER TREATMENT PLANTS SEQUOIA & KINGS CANYON NATIONAL PARKS	DRAWING NO. 102 / 177,507 PMIS/PKG NO. 317446 SHEET 123 OF 135

25/04/2022 15:49 MARIO GARCIA G:\CLIENTS\WES\SEKI\317446\DRAWINGS\BUCKEYE\DWGS\ARCH BUCKEYE\118 CONTROL BUILDING FLOOR PLAN.DWG

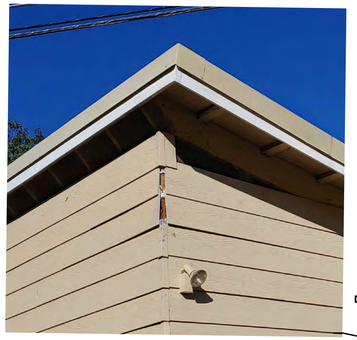

REPLACE DAMAGED SIDING IN KIND.
CONTRACTOR TO COORDINATE
WITH THE GOVERNMENT

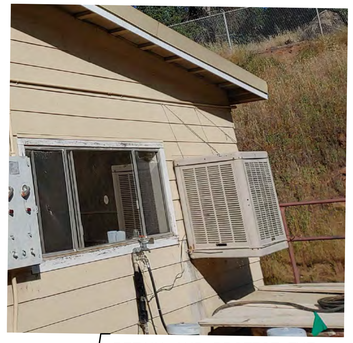

RETAIN AND PROTECT THE
SWAMP COOLER AND
CLOSE THE OPENING
WITH SIDING IN KIND

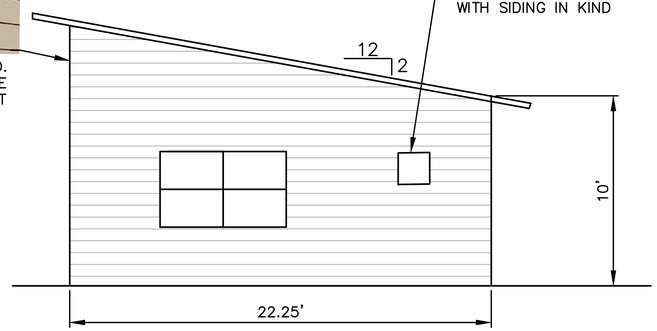

1 A2.2 ELEVATION 1
NTS

REPLACE DAMAGED SIDING IN KIND.
CONTRACTOR TO COORDINATE
WITH THE GOVERNMENT

REPLACE WINDOW PER SPECIFICATIONS

REPLACE DOOR PER SPECIFICATIONS

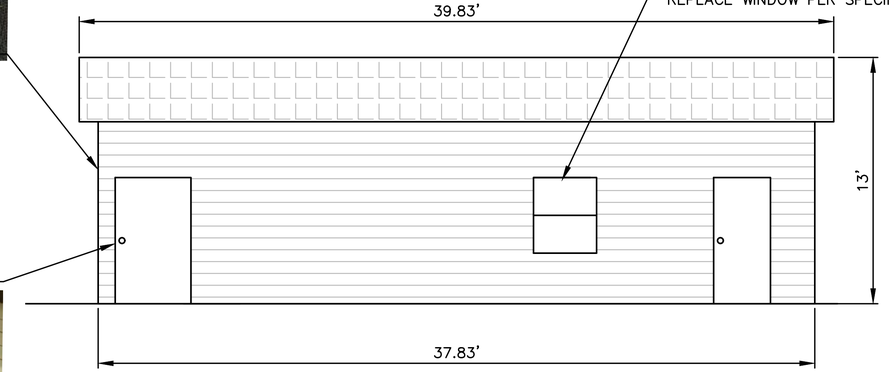

2 A2.2 ELEVATION 2
NTS

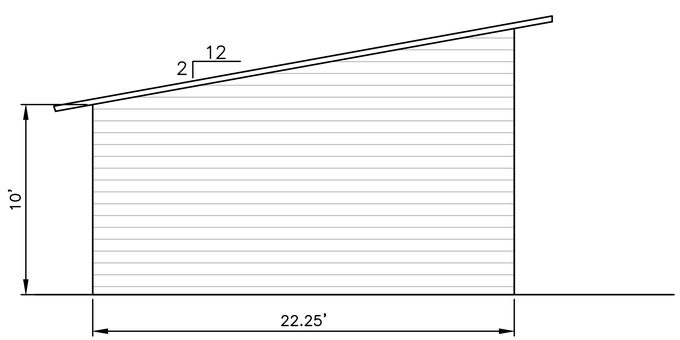

3 A2.2 ELEVATION 3
NTS

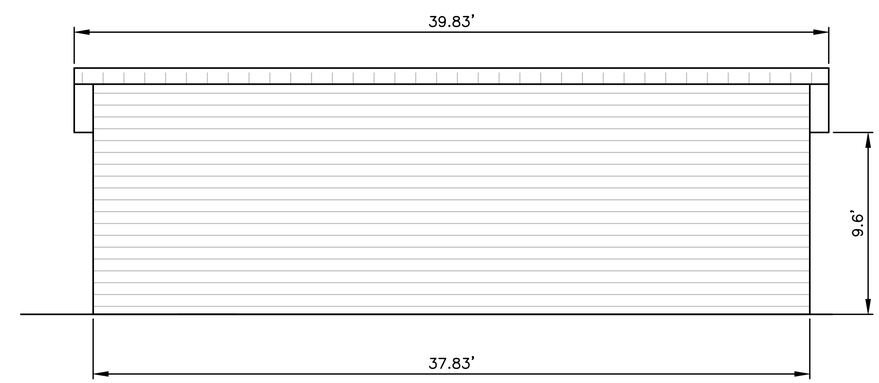

4 A2.2 ELEVATION 4
NTS

REGISTERED PROFESSIONAL ENGINEER
DAVID BARTON BROOKE
NO. 19417
CIVIL
STATE OF CALIFORNIA
100% DRAFT

DESIGNED: D. BROOKE CADD M. GARCIA TECH. REVIEW: J. BLOM DATE: 04/07/2022	SUB SHEET NO. A2.2	TITLE OF SHEET CONTROL BUILDING EXT. ELEV.– BHWWTP REHABILITATE ASH AND BUCKEYE WASTEWATER TREATMENT PLANTS SEQUOIA & KINGS CANYON NATIONAL PARKS	DRAWING NO. 102 / 177,507 PMIS/PKG NO. 317446 SHEET 124 OF 135

05/04/2022 15:49 MARIO GARCIA G:\CLIENTS\NPS\SEKI\317446\DRAWINGS\BUCKEYE\119 CONTROL BUILDING EXTERIOR ELEVATIONS.DWG

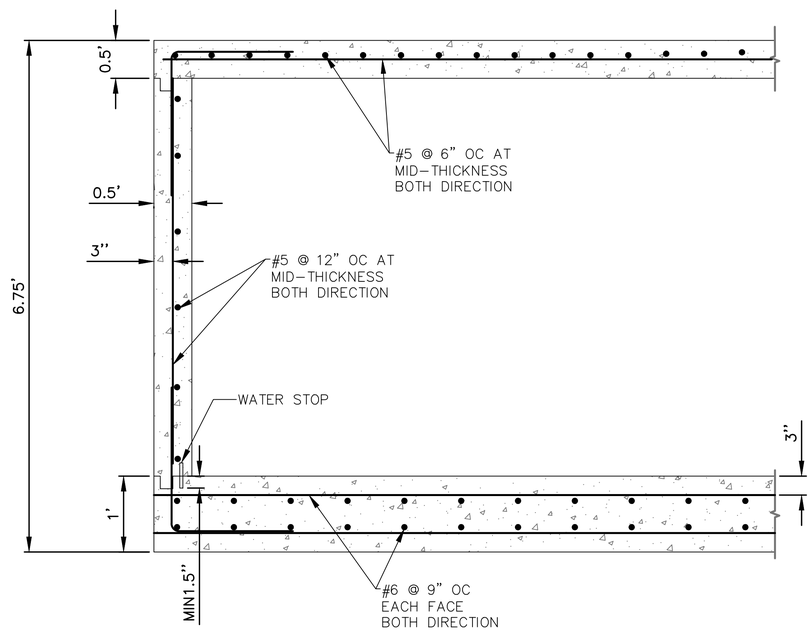

1 S2.1 **TANK SECTION**
SCALE: NTS

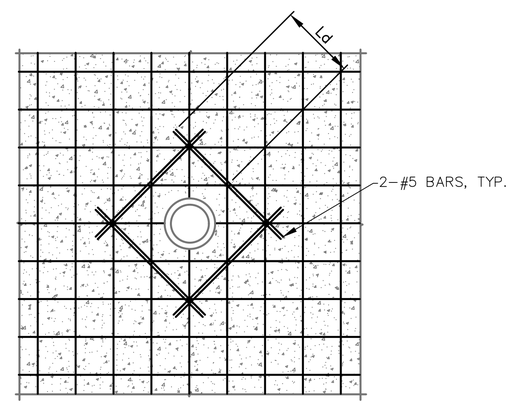

2 S2.1 **PIPE PENETRATION DETAIL**
SCALE: NTS

NOTES:

1. LAP WALL AT SPLICES Lb. SEE DETAIL 3/S1.4.
2. ALL VERTICAL REINFORCEMENT IN CONCRETE SHALL BE CONTINUOUS FROM STRUCTURAL FOOTING TO FIRST STRUCTURAL FLOOR/SLAB ABOVE, UNLESS NOTED OTHERWISE.
3. START HORIZONTAL AND VERTICAL BARS 1-INCH CLEAR OF EDGE OF OPENINGS. SPACE REINFORCEMENT BARS AT EQUAL SPACES NOT TO EXCEED REQUIRED SPACING.
4. REFER TO DEVELOPMENT LENGTH AND LAP SPLICE TABLES FOR VALUE OF Ld, Lb. AS SHOWN IN DETAIL 3/S1.4.
5. SPLICES IN HORIZONTAL REINFORCEMENT SHALL BE STAGGERED. SPLICES IN TWO CURTAINS WHERE USED SHALL NOT OCCUR IN THE SAME LOCATION, UNLESS NOTED OTHERWISE.

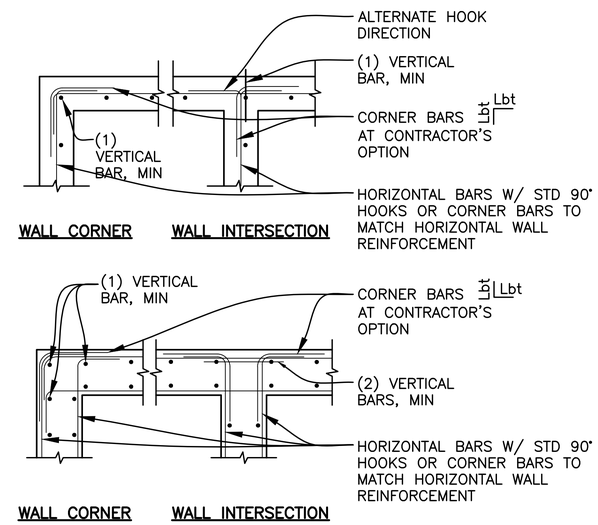

3 S2.1 **TYPICAL DETAIL: CONCRETE WALL REINFORCEMENT**
SCALE: NTS

REGISTERED PROFESSIONAL ENGINEER
DAVID BARTON BROOKE
NO. 72417
100% DRAFT
CIVIL
STATE OF CALIFORNIA

DESIGNED: D. BROOKE	SUB SHEET NO.	TITLE OF SHEET	DRAWING NO.
CADD M. GARCIA	S2.1	SEPTIC TANK– BHWWTP	102 / 177,507
TECH. REVIEW: J. BLOM		REHABILITATE ASH AND BUCKEYE WASTEWATER TREATMENT PLANTS SEQUOIA & KINGS CANYON NATIONAL PARKS	PMIS/PKG NO. 317446
DATE: 04/07/2022			SHEET 125 OF 135

26/04/2022 14:34 MARIO GARCIA G:\CLIENTS\NPS\SEK\317446\DRAWINGS\BUCKEY DWGS\STRUCT BUCKEYE\120 SEPTIC TANK.DWG

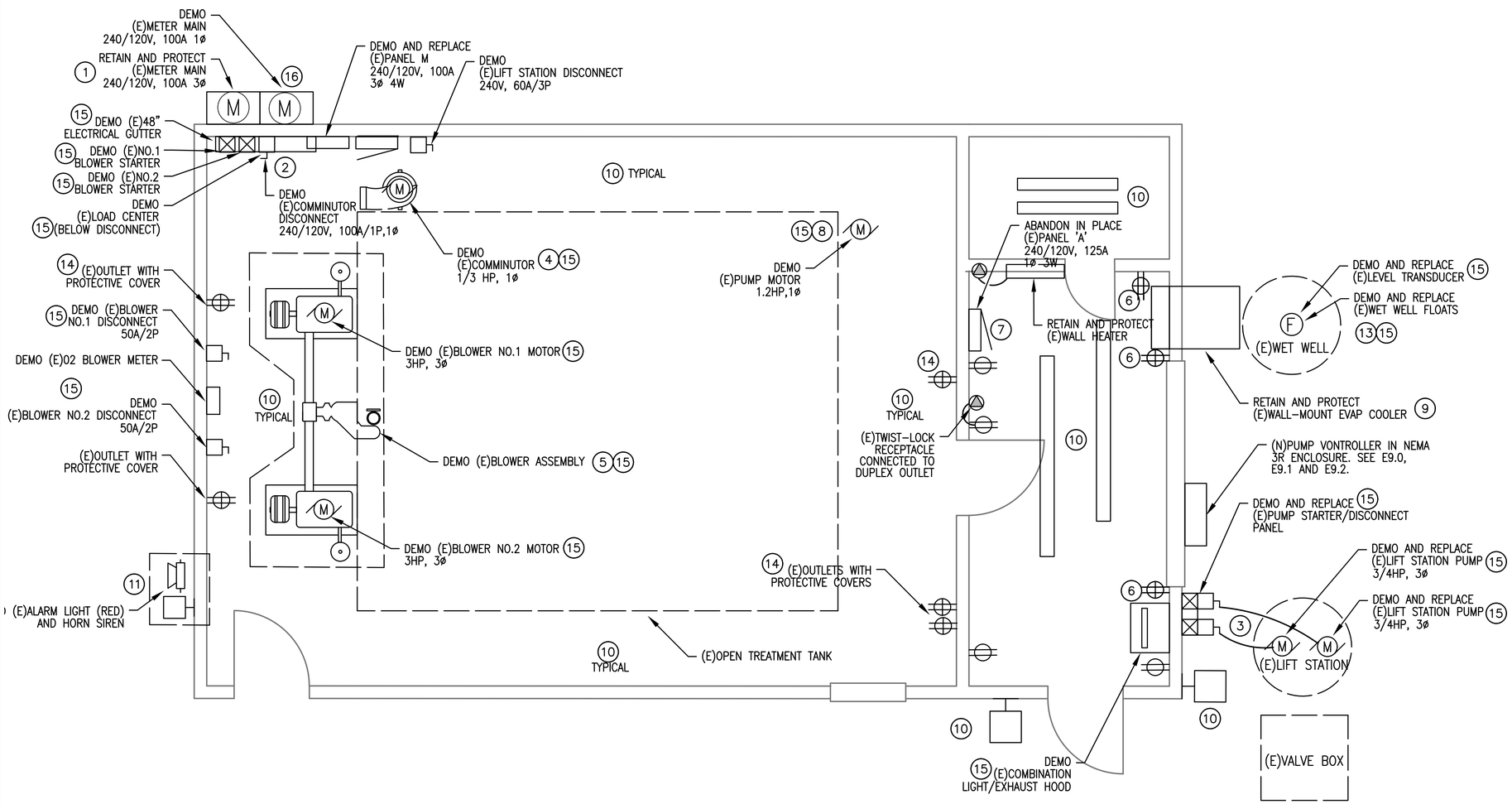

PLAN VIEW – EXISTING ELECTRICAL SITE PLAN BHWWTP

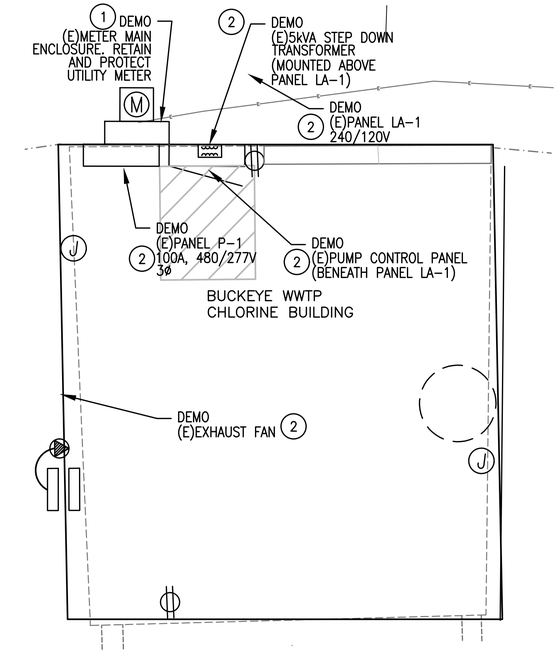

PLAN VIEW – EXISTING CHLORINATION BUILDING BHWWTP

3' 0 3' 6'

GENERAL NOTES: CHLORINE BUILDING

A. DEMOLISH AND REMOVE THE ENTIRE ELECTRICAL INSTALLATION INSIDE CHLORINE BUILDING.

B. COORDINATE ALL ASPECTS OF THE UTILITY COMPANY REQUIREMENTS PRIOR TO DEMOLISHING ELECTRICAL POWER.

KEYNOTES: CHLORINE BUILDING (#)

1. CONTRACTOR REMOVE AND PROTECT UTILITY METER. AFTER CHLORINATION BUILDING IS DEMOLISHED, BUILD SUPPORT RACK AND MOUNT METER. COORDINATE ALL ASPECTS WITH UTILITY COMPANY (SCE). METER WILL REMAIN FOR POTENTIAL NET METERING OF A FUTURE PV SYSTEM.

2. DEMOLISH AND REMOVE PANEL P1 AND LA-1, STEP-DOWN TRANSFORMER, AND PUMP CONTROL PANEL. DEMOLISH AND REMOVE OUTLETS, CONDUIT, JUNCTION BOXES, EXHAUST FAN(S), AND ALL OTHER ELECTRICAL ITEMS.

GENERAL NOTES: BUCKEYE WWTP BUILDING

A. EXISTING EQUIPMENT, SUCH AS LIGHTING FIXTURES, WIRING DEVICES, CONDUITS, ETC., SHOWN ON PLANS SHALL BE REMOVED, PATCH/REPAIR SURFACES, AND DEMO CIRCUITS (INCLUDING CONDUIT AND WIRE) BACK TO POINT OF ORIGIN.

B. DISCONNECT ALL ABANDONED WIRING OF ALL TYPES AT THE OVERCURRENT PROTECTIVE DEVICE. COMPLETELY REMOVE ALL ABANDONED WIRING.

C. MAINTAIN AND RESTORE, IF INTERRUPTED, ALL CONDUITS AND CONDUCTORS PASSING THROUGH RENOVATED AREAS AND SERVICING UNDISTURBED AREAS.

KEYED NOTES: BUCKEYE WWTP BUILDING (#)

1. THREE PHASE SERVICE TO REMAIN IN USE. THREE PHASE METER/MAIN TO BE REPLACED WITH NEW ENCLOSURE. SINGLE PHASE SERVICE TO BE REMOVED FROM SERVICE. COORDINATE SERVICE CHANGES AND IMPROVEMENTS WITH UTILITY COMPANY.

2. EXISTING GUTTER, TIMER, STARTERS, AND PANELS TO BE DEMOLISHED. PANEL 'M' WILL BE REPLACED WITH NEW 240/120V, THREE-PHASE PANEL.

3. LIFT STATION EQUIPMENT, INCLUDING PUMPS, STARTERS/DISCONNECTS, TO BE REPLACED.

4. COMMINUTER TO BE REMOVED FROM BUILDING.

5. BLOWER ASSEMBLY AND RELATED EQUIPMENT (MOTORS,STARTERS, DISCONNECTS, METER) TO BE REMOVED FROM BUILDING.

6. EXISTING COUNTERTOP RECEPTACLES AND RECEPTACLES LOCATED OUTDOORS OR IN INDOOR WET AREAS TO BE REPLACED WITH GFCI RECEPTACLES.

7. EXISTING 120/240V POWER PANEL ENCLOSURE TO REMAIN. PANEL INTERIOR IS TO BE REMOVED. ALL CIRCUITS THAT ORIGINATED IN THEIS PANEL ARE TO BE TRACED. ALL DEVICES THAT WERE SERVED BY THIS PANEL ARE TO BE INTERCEPTED AND EXTENDED TO NEW PANEL 'M'. UPDATE CIRCUIT DIRECTORY IN PANEL 'M' UPON COMPLETION. PROVIDE PERMANENT PLACARD ON OLD PANEL TO DESIGNATE THE ENCLOSURE A 'JUNCTION BOX'.

8. MECHANICAL PUMP IN TANK ROOM TO BE REMOVED.

9. EXISTING WALL-MOUNT EVAPORATIVE COOLER TO REMAIN.

10. EXISTING LIGHT FIXTURES IN THIS AREA TO BE REMOVED AND REPLACED WITH MORE EFFICIENT AND ENVIRONMENTALLY COMPATIBLE LED LIGHTS.

11. REMOVE EQUIPMENT THAT HAS BEEN ABANDONED IN PLACE OR IS NO LONGER INTENDED FOR USE.

12. MECHANICAL PUMP IN TANK ROOM TO BE REMOVED.

13. FLOATS AND SENSOR(S) IN WET WELL TO BE REPLACED.

14. REPLACE EXISTING RECEPTACLE WITH NEW GFCI VERSION. FURNISH WITH WEATHERPROOF COVER.

15. DEMO EXISTING DEVICE AND ASSOCIATED CONDUIT/WIRE BACK TO POINT OF ORIGIN.

16. COORDINATE ALL ASPECTS OF DEMOLITION WITH SCE. SCE WILL NEED TO REMOVE FEEDER TAPPING AHEAD OF EXISTING WEATHERHEAD. EXISTING SINGLE PHASE SERVICE WEATHERHEAD, RISER AND METER MAIN IS TO BE REMOVED AFTER DISCONNECTION BY SCE.

3' 0 3' 6'

REGISTERED PROFESSIONAL ENGINEER PHILO CARTER 21311 ELECTRICAL STATE OF CALIFORNIA

100% DRAFT

DESIGNED: B. ANDERSON CADD M. SMITH TECH. REVIEW: V. CARTER DATE: 04/14/2022	SUB SHEET NO. E7.0	TITLE OF SHEET EXISTING ELECTRICAL SITE PLAN REHABILITATE ASH AND BUCKEYE WASTEWATER TREATMENT PLANTS SEQUOIA & KINGS CANYON NATIONAL PARKS	DRAWING NO. 102 / 177,507 PMIS/PKG NO. 317446 SHEET 126 OF 135

27/04/2022 10:15 JENNIFER CHEEK G:\CLIENTS\NPS\SEK\317446\DRAWINGS\BUCKEY DWGS\ELEC BUCKEYE\E7.0 EXISTING ELECTRICAL SITE PLAN.DWG

DEMOLITION GENERAL NOTES:

A. REFER TO SHEET E10.0 FOR SPECIFIC DEMOLITION PHOTOGRAPHS.

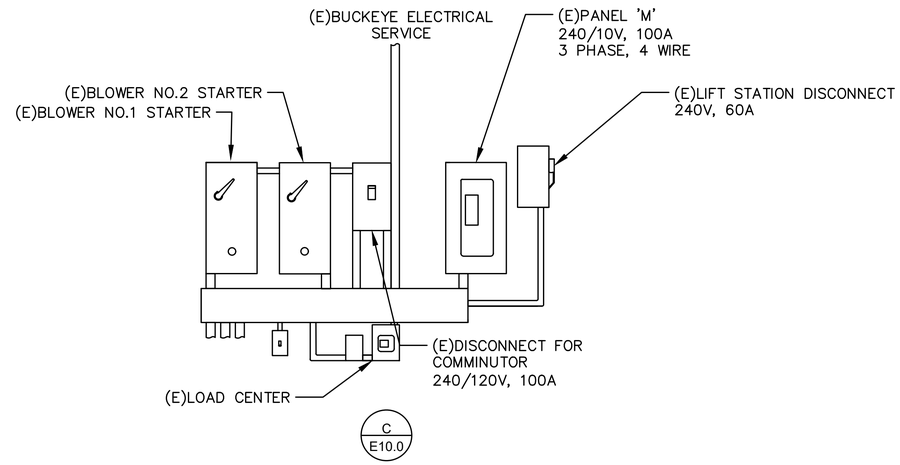

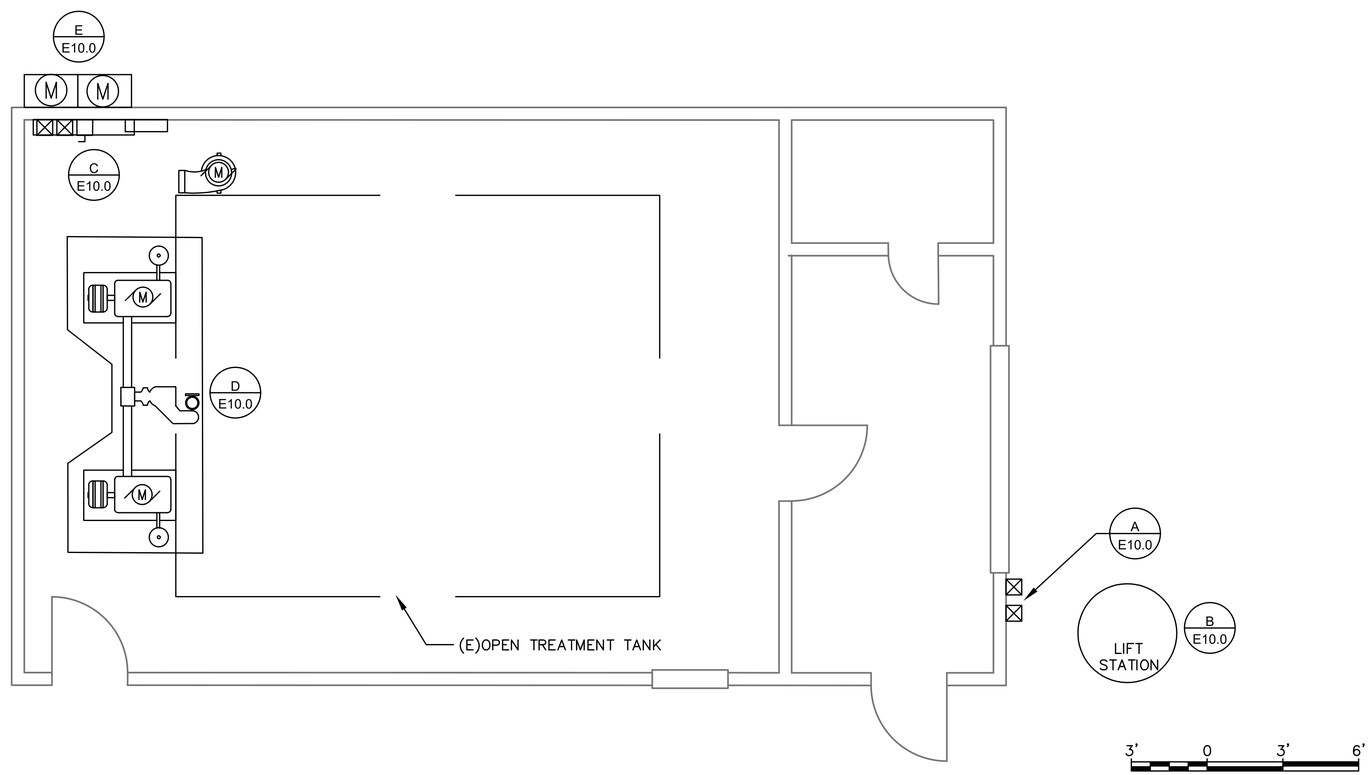

PLAN VIEW –BUCKEYE HOUSING WWTP CONTROL BUILDING ELECTRICAL DEMOLITION PLAN

REGISTERED PROFESSIONAL ENGINEER PHILO CARTER ELECTRICAL STATE OF CALIFORNIA

100% DRAFT

DESIGNED: B. ANDERSON CADD M. SMITH TECH. REVIEW: V. CARTER DATE: 04/14/2022	SUB SHEET NO. E8.0	TITLE OF SHEET CTRL BLDG ELEC DEMO PHOTO REFERENCE REHABILITATE ASH AND BUCKEYE WASTEWATER TREATMENT PLANTS SEQUOIA & KINGS CANYON NATIONAL PARKS	DRAWING NO. 102 / 177,507 PMIS/PKG NO. 317446 SHEET 127 OF 135

27/04/2022 10:22 JENNIFER CHEEK G:\CLIENTS\NPS\SEKI\317446\DRAWINGS\BUCKEY DWGS\ELEC BUCKEYE\E8.0 CONTROL BUILDING ELECTRICAL PLAN.DWG

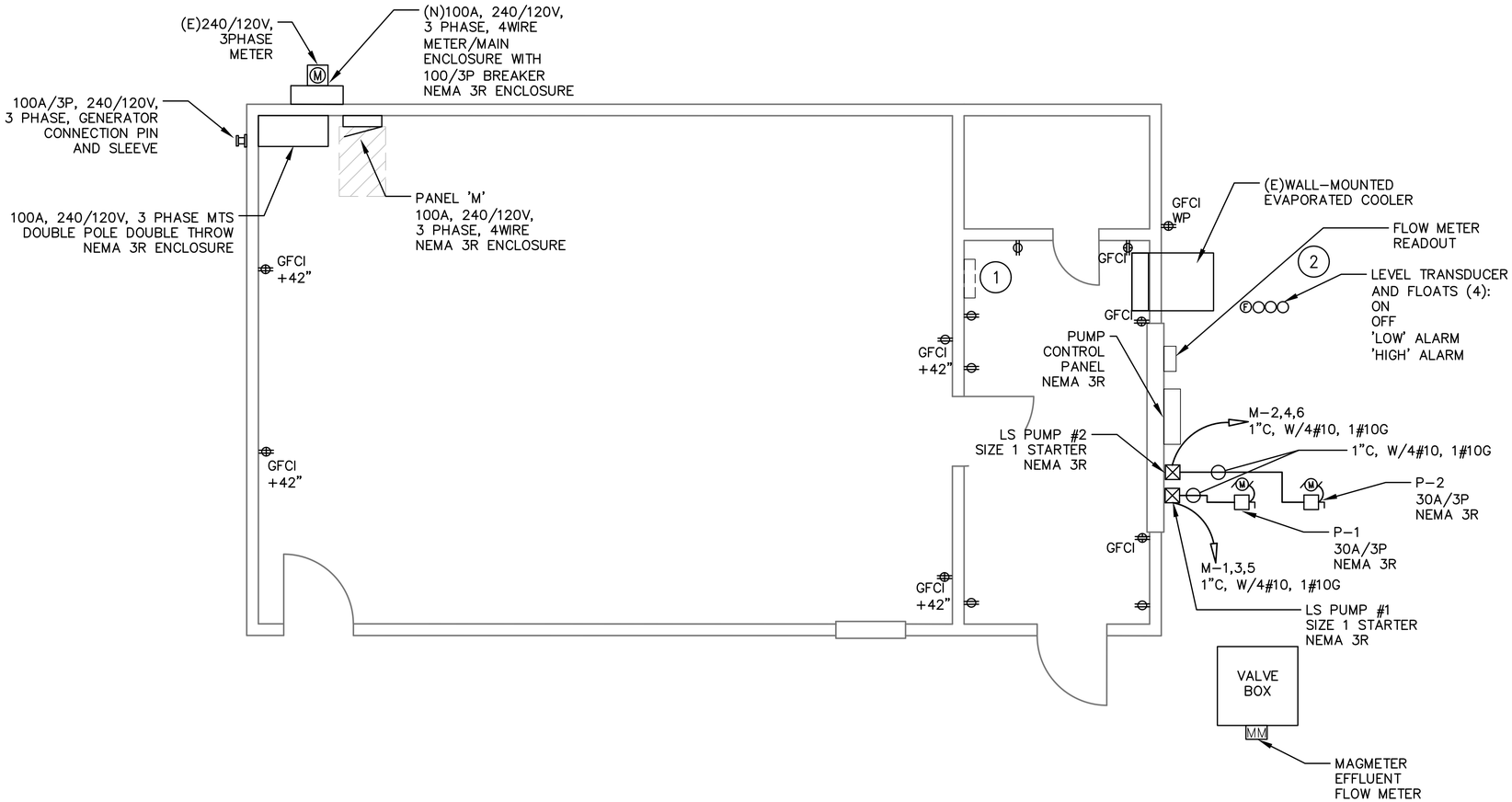

PLAN VIEW –BUCKEYE HOUSING WWTP CONTROL BUILDING POWER PLAN

POWER GENERAL NOTES

A. JUNCTION BOXES SHALLBE WEATHER PROOF (WP) AND SIZED AS REQUIRED, BUT NO SMALLER THAN 6" X6" X 4".

B. ALL EXTERIOR EQUIPMENT ENCLOSURES SHALL BE NEMA 3R RATED.

C. EACH BRANCH CIRCUIT HOMERUN SHALL HAVE NO MORE THAN THREE CIRCUITS. EACH BRANCH CIRCUIT HOMERUN SHALL HAVE A SEPARATE GREEN INSULATED EQUIPMENT GROUNDING CONDUCTOR.

D. MULTI-GANG BACKBOXES FOR DIFFERENT VOLTAGES AND TYPES OF EMERGENCY AND NORMAL BRANCH WIRING DEVICES SHALL HAVE DIVIDERS BETWEEN DEVICES.

POWER KEYED NOTES (#)

1. PANEL 'A' ENCLOSURE TO REMAIN. ALL CONDUIT AND WIRES THAT CAN BE DISMANTLED WITH OUT DISRUPTING THE SURROUNDING WALLS IS TO BE REMOVED. LEAVING THE ENCLOSURE IN PLACE IN THE WALL.

2. OBSERVE PROPER WORKING CLEARANCES.

3' 0 3' 6'

REGISTERED PROFESSIONAL ENGINEER PHILO CARTER 21331 ELECTRICAL STATE OF CALIFORNIA

100% DRAFT

DESIGNED: B. ANDERSON CADD M. SMITH TECH. REVIEW: V. CARTER DATE: 04/14/2022	SUB SHEET NO. E8.1	TITLE OF SHEET CTRL BLDG POWER PLAN REHABILITATE ASH AND BUCKEYE WASTEWATER TREATMENT PLANTS SEQUOIA & KINGS CANYON NATIONAL PARKS	DRAWING NO. 102 / 177,507 PMIS/PKG NO. 317446 SHEET 128 OF 135

26/04/2022 15:04 MARIO GARCIA G:\CLIENTS\NPS\SEK\317446\DRAWINGS\BUCKEY DWGS\ELEC BUCKEYE\E8.0 CONTROL BUILDING ELECTRICAL PLAN.DWG

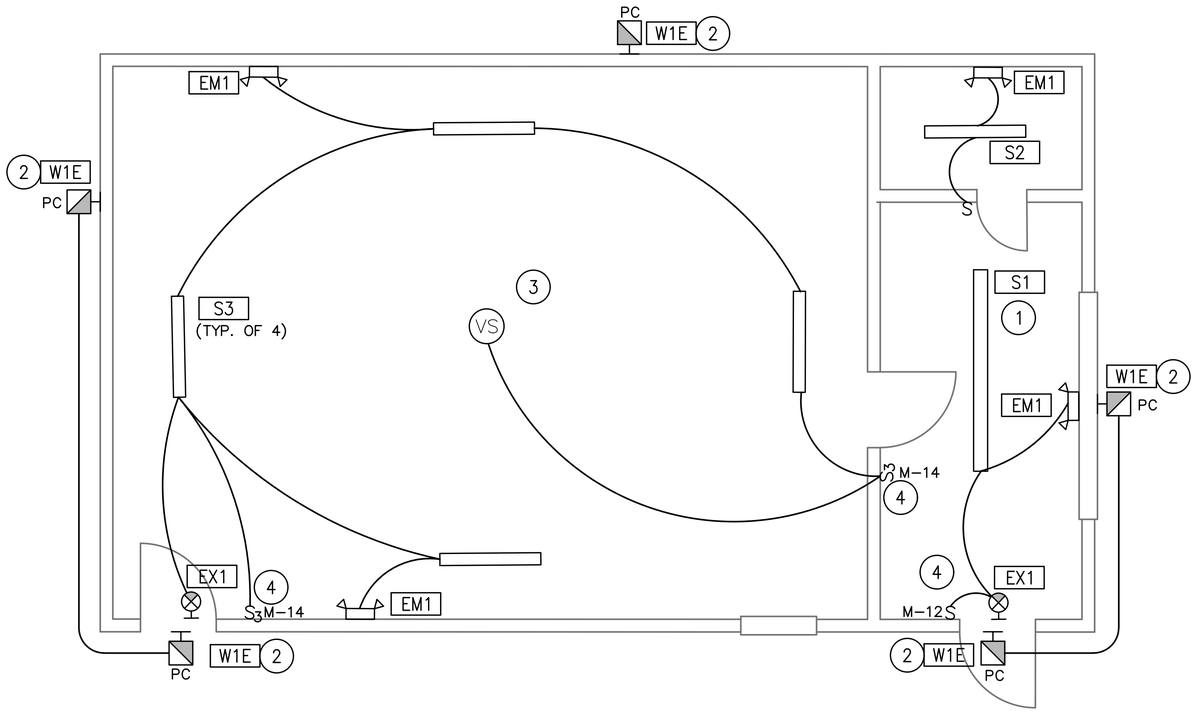

PLAN VIEW –BUCKEYE HOUSING WWTP CONTROL BUILDING LIGHTING PLAN

LIGHTING GENERAL NOTES

A. ALL FINAL LOCATIONS AND ARRANGEMENTS OF LIGHTING FIXTURES SHALL BE VERIFIED AND APPROVED BEFORE INSTALLATION.

B. EACH BRANCH CIRCUIT HOMERUN SHALL HAVE NO MORE THAN THREE CIRCUITS. EACH BRANCH CIRCUIT HOMERUN SHALL HAVE A SEPARATE GREEN INSULATED EQUIPMENT GROUNDING CONDUCTOR.

C. MULTI-GANG BACKBOXES FOR DIFFERENT VOLTAGES AND TYPES OF EMERGENCY AND NORMAL BRANCH WIRING DEVICES SHALL HAVE DIVIDERS BETWEEN DEVICES.

D. PROVIDE UNSWITCHED LEG OF LOCAL LIGHTING CIRCUIT TO EMERGENCY/EXIT FIXTURE FOR CONSTANT CHARGE TO INTERNAL BATTERY.

LIGHTING KEYED NOTES (#)

1. NEW LIGHT FIXTURES IN THIS AREA TO BE ENERGY EFFICIENT LED STRIP LIGHTS WITH INTEGRAL OCCUPANCY SENSOR (LITHONIA: CLX-L96-8000LM-SEF-RDL-MVOLT-EZ1-35K-80CRI-E10WLCP-SPD-MSD7-WH OR EQUIVALENT) ELECTRICAL CONTRACTOR IS TO ACCOUNT/PROVIDE FOR A FULLY OPERATIONAL INSTALLATION.
2. EXTERIOR BULIDING MOUNTED FIXTURES TO BE ENERGY EFFICIENT LED FIXTURE WITH A DUSK TO DAWN PHOTOCELL. SHADED FIXTURE INDICATES BATTERY BACKUP [E20WC] (LITHONIA: DSXW1 LED-10C-700-30K-T2M-MVOLT-PE-[E20WC]-DDBXD OR EQUIVALENT).
3. PROVIDE CEILING MOUNTED VACANCY SENSOR (COOPER: VAC-DT-0501-R OR EQUIVALENT).
4. SWITCH PROVIDED FOR MANUAL OVERRIDE ON/OFF.
5. INTERCEPT AND EXTEND (E) LIGHTING CIRCUIT TO INCLUDE THE INDICATED FIXTURES. CONTRACTOR TO VERIFY THE CIRCUIT CAN ACOMMODATE THE ELECTRICAL LOAD PRIOR TO INSTALLATION.

3' 0 3' 6'

REGISTERED PROFESSIONAL ENGINEER
PHILO CARTER
2831
ELECTRICAL
STATE OF CALIFORNIA
100% DRAFT

DESIGNED: B. ANDERSON CADD M. SMITH TECH. REVIEW: V. CARTER DATE: 04/14/2022	SUB SHEET NO. E8.2	TITLE OF SHEET CTRL BLDG LIGHTING PLAN REHABILITATE ASH AND BUCKEYE WASTEWATER TREATMENT PLANTS SEQUOIA & KINGS CANYON NATIONAL PARKS	DRAWING NO. 102/177,507 PMIS/PKG NO. 317446 SHEET 129 OF 135

26/04/2022 15:04 MARIO GARCIA G:\CLIENTS\NPS\SEKI\317446\DRAWINGS\BUCKEY DWGS\ELEC BUCKEYE\E8.0 CONTROL BUILDING ELECTRICAL PLAN.DWG

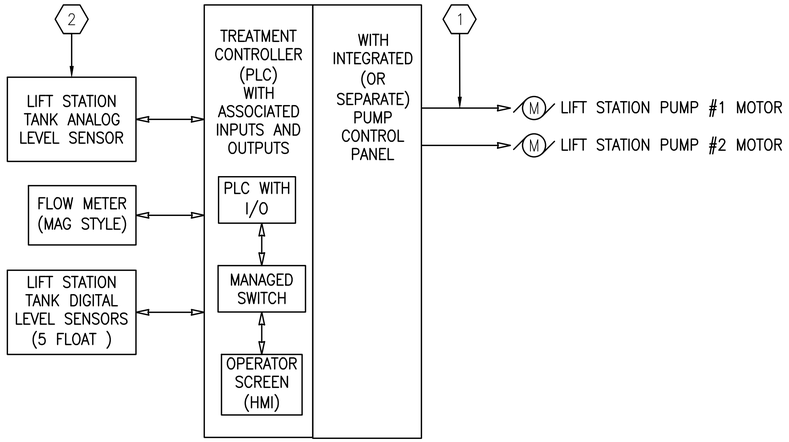

GENERAL NOTES

1. SEE CONTRACT SPECIFICATIONS FOR ADDITIONAL REQUIREMENTS AND DETAILS.
2. CONTROL PANEL SHALL BE PROVIDED BY CONTRACTOR. IT SHALL CONTAIN THE PLC COMPONENTS AND MOTOR CONTROLS REQUIRED TO MEET THE I/O REQUIREMENTS, AND AN UNMANAGED SWITCH AND HMI DISPLAY. PANEL SHALL BE DESIGNED AND BUILT TO MEET UL508A REQUIREMENTS.
3. SEE SPECIFICATIONS FOR A COMPLETE LIST OF SIGNALS REQUIRED FOR THE PROJECT.
4. CONTRACTOR IS TO SUPPLY ALL ITEMS FOR A COMPLETE FUNCTIONING SYSTEM. SEE THE SPECIFICATIONS FOR ADDITIONAL INFORMATION AND REQUIREMENTS.
5. SEE NETWORK BLOCK DIAGRAM FOR COMMUNICATIONS NETWORK DETAILS

KEYNOTES

1. MOTORS DEPICTED IN THIS BLOCK DIAGRAM REPRESENT THE MOTOR WIRING TO THE MOTOR AND/OR THE CONTROLS FOR THE MOTOR CONTROLLER EQUIPMENT AS APPLICABLE TO THE COMPONENTS SUPPLIED.
2. SENSORS LOCATED INSIDE TANKS SHALL HAVE INTRINSIC ISOLATION.

BUCKEYE LIFT STATION BLOCK DIAGRAM AND CONTROL SCHEME

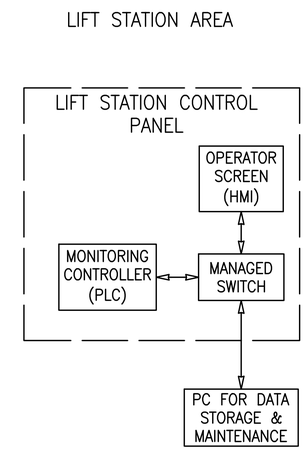

GENERAL NOTES

1. THIS NETWORK BLOCK DIAGRAM IS INTENDED TO IDENTIFY THE INTER–CONNECTIVITY REQUIRED TO ACCOMPLISH THE FUNCTIONAL REQUIREMENTS OF THE CONTROL SYSTEMS USED IN THIS PROJECT.
2. IT IS THE CONTRACTORS RESPONSIBILITY TO VERIFY THAT THE SELECTED COMPONENTS FOR THE PROJECT ACCOMPLISH COMMUNICATIONS BETWEEN THE COMPONENTS IDENTIFIED HERE.
3. NPS WILL CONFIGURE THE MANAGED NETWORK SWITCH TO BE SUPPLIED BY THE CONTRACTOR. THE CONTRACTOR SHALL SUBMIT A PROPOSED MANAGED NETWORK SWITCH TO NPS FOR REVIEW AND APPROVAL PRIOR TO INSTALLATION.
4. THE PC TO BE SUPPLIED BY THE CONTRACTOR WILL BE LOADED WITH ALL PLC AND HDMI CONFIGURATION PROGRAMS AND HAVE THE CONFIGURATION ACCEPTED AT COMMISSIONING FOR EACH PLC AND HIM. ALL CONTRACTOR TROUBLE SHOOTING AND DEBUG WILL BE PERFORMED USING THIS PC. ONCE COMMISSIONING IS COMPLETED ENSURE CURRENT VERSIONS OF THE CONTROL SYSTEMS PROGRAMS ARE KEPT ON THIS PC.
5. SEE CONTRACT SPECIFICATIONS FOR ADDITIONAL REQUIREMENTS.

BUCKEYE NETWORK BLOCK DIAGRAM

DESIGNED: B. ANDERSON CADD E. YOUNG TECH. REVIEW: B. ANDERSON DATE: 02/18/2022	SUB SHEET NO. E9.0	TITLE OF SHEET CONTROL SCHEME REHABILITATE ASH AND BUCKEYE WASTEWATER TREATMENT PLANTS SEQUOIA & KINGS CANYON NATIONAL PARKS	DRAWING NO. 102 / 177,507 PMIS/PKG NO. 317446 SHEET 130 OF 135

25/04/2022 15:50 MARIO GARCIA G:\CLIENTS\NPS\SEK\317446\DRAWINGS\BUCKEY DWGS\ELEC BUCKEYE\E9.0 CONTROL SCHEME.DWG

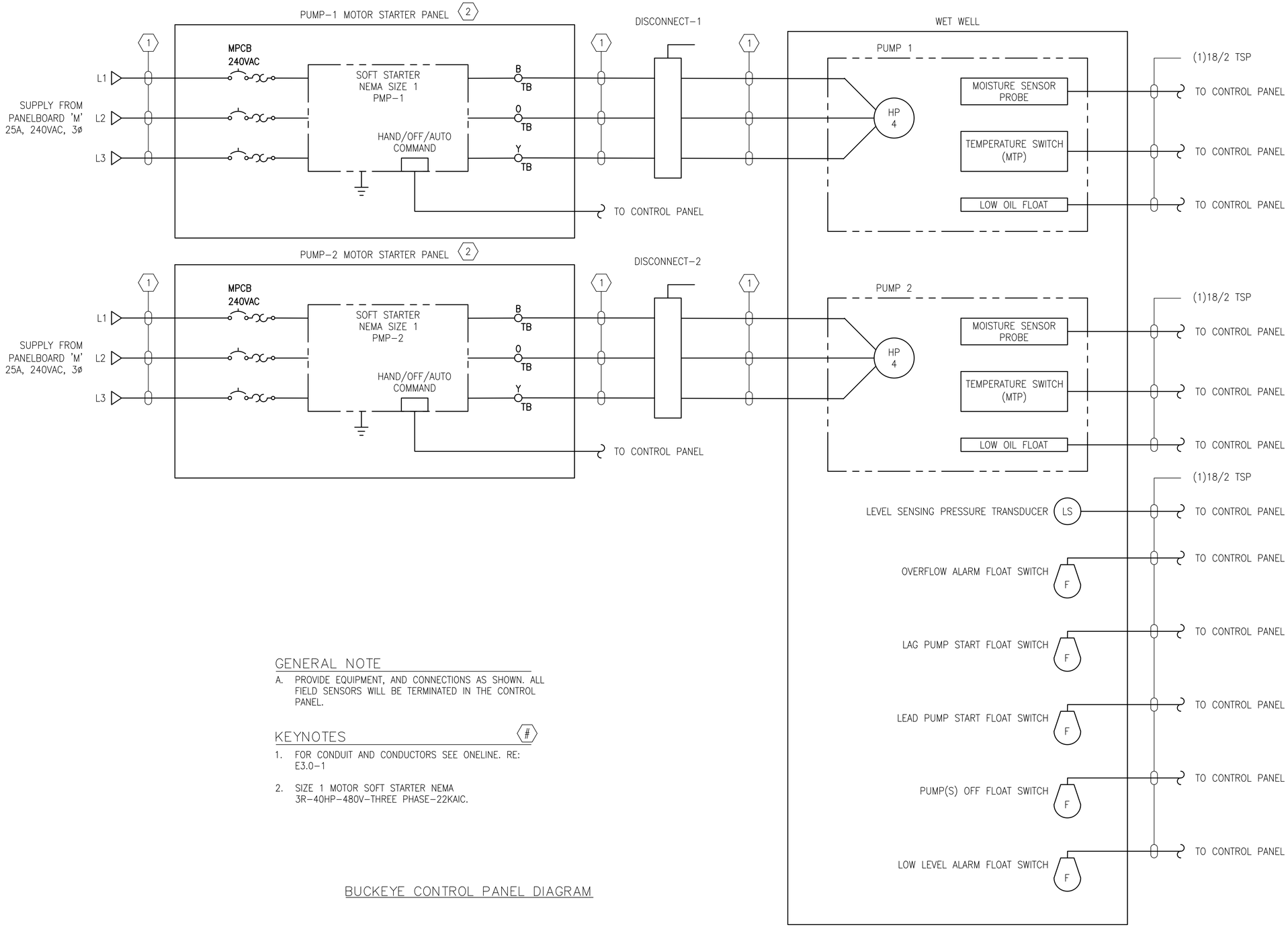

GENERAL NOTE

A. PROVIDE EQUIPMENT, AND CONNECTIONS AS SHOWN. ALL FIELD SENSORS WILL BE TERMINATED IN THE CONTROL PANEL.

KEYNOTES

1. FOR CONDUIT AND CONDUCTORS SEE ONELINE. RE: E3.0-1
2. SIZE 1 MOTOR SOFT STARTER NEMA 3R-40HP-480V-THREE PHASE-22KAIC.

BUCKEYE CONTROL PANEL DIAGRAM

REGISTERED PROFESSIONAL ENGINEER
PHILO CARTER
231
ELECTRICAL
STATE OF CALIFORNIA

100% DRAFT

DESIGNED: B. ANDERSON CADD E. YOUNG TECH. REVIEW: B. ANDERSON DATE: 02/18/2022	SUB SHEET NO. E9.1	TITLE OF SHEET CONTROL PANEL DIAGRAM-A REHABILITATE ASH AND BUCKEYE WASTEWATER TREATMENT PLANTS SEQUOIA & KINGS CANYON NATIONAL PARKS	DRAWING NO. 102/177,507 PMIS/PKG NO. 317446 SHEET 131 OF 135

25/04/2022 15:50 MARIO GARCIA G:\CLIENTS\NPS\SEKI\317446\DRAWINGS\BUCKEY DWGS\ELEC BUCKEYE\E9.1 CONTROL PANEL DIAGRAM-A.DWG

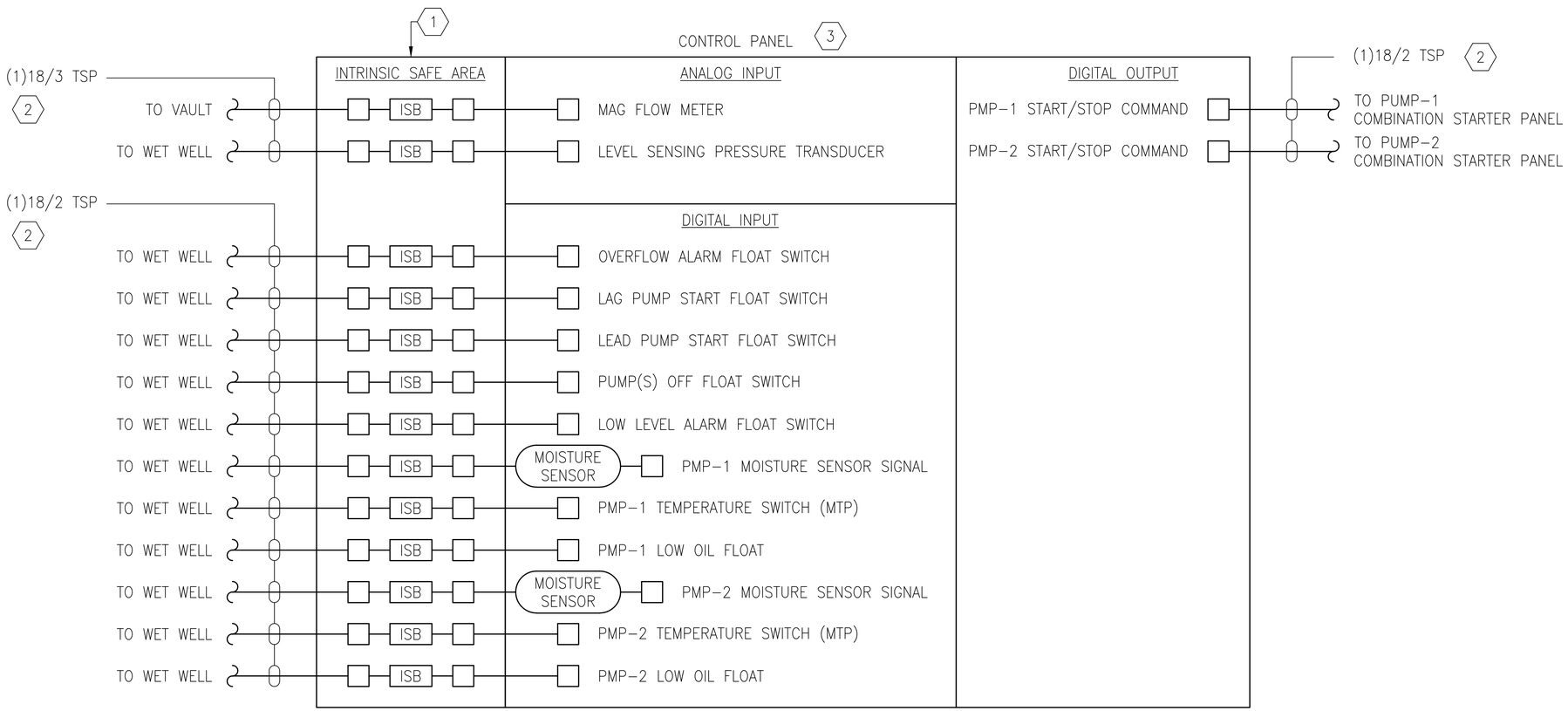

BUCKEYE CONTROL SYSTEM DETAILS

GENERAL NOTE

A. PROVIDE ALL EQUIPMENT, AND CONNECTIONS AS SHOWN. ALL FIELD SENSORS WILL BE TERMINATED IN THE CONTROLS PANEL.

B. MAG FLOW METER TO BE INTRINSICALLY SAFE, WITH FLOW RANGE 0–1600 GPM MINIMUM.

C. PS–1 TO BE PRESSURE SENSOR WITH 24 VDC POWER IN, 4–20 mA POWER OUT.

D. FLOAT SWITCHES TO BE –40 TO 200 FAHRENHEIT RATED 24 VDC, 0.5A.

E. LEVEL SENSING PRESSURE TRANSDUCER.

KEYNOTES (#)

1. INTRINSICALLY SAFE AREA SHALL FOLLOW NEC 504 & UL698A.
2. CABLE SHIELDING SHALL BE GROUNDED AND ONLY AT ONE END. THE CABLE SHIELDING GROUNDING SHALL BE IN THE CONTROL PANEL.
3. PANEL PROVIDED BY OTHERS. INSTALLATION AND FIELD WIRE TERMINATION BY CONTRACTOR.

REGISTERED PROFESSIONAL ENGINEER PHILO CARTER 2231 ELECTRICAL STATE OF CALIFORNIA

100% DRAFT

DESIGNED: B. ANDERSON CADD E. YOUNG TECH. REVIEW: B. ANDERSON DATE: 02/18/2022	SUB SHEET NO. E9.2	TITLE OF SHEET CONTROL PANEL DIAGRAM–B REHABILITATE ASH AND BUCKEYE WASTEWATER TREATMENT PLANTS SEQUOIA & KINGS CANYON NATIONAL PARKS	DRAWING NO. 102 / 177,507 PMIS/PKG NO. 317446 SHEET 132 OF 135

25/04/2022 15:50 MARIO GARCIA G:\CLIENTS\NPS\SEKI\317446\DRAWINGS\BUCKEY DWGS\ELEC BUCKEYE\E9.2 CONTROL PANEL DIAGRAM-B.DWG

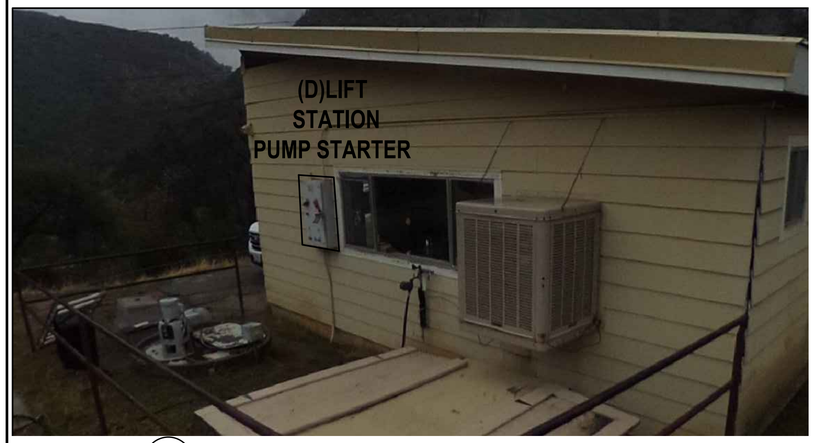

A BHWWTP BUILDING NORTH EXTERIOR WALL

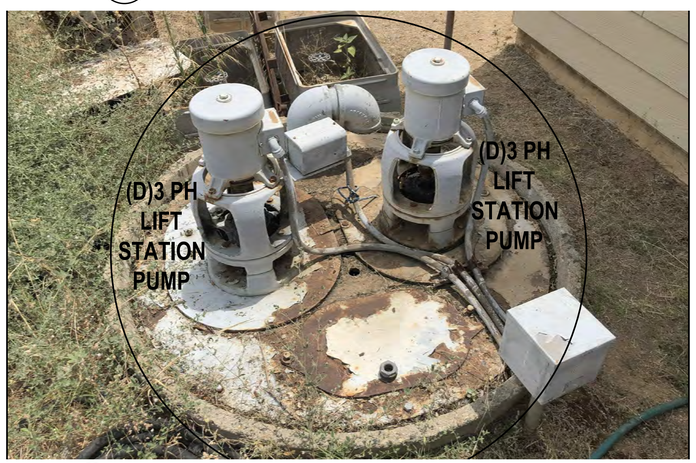

B BHWWTP BUILDING PUMPS NORTH END OF BUILDING

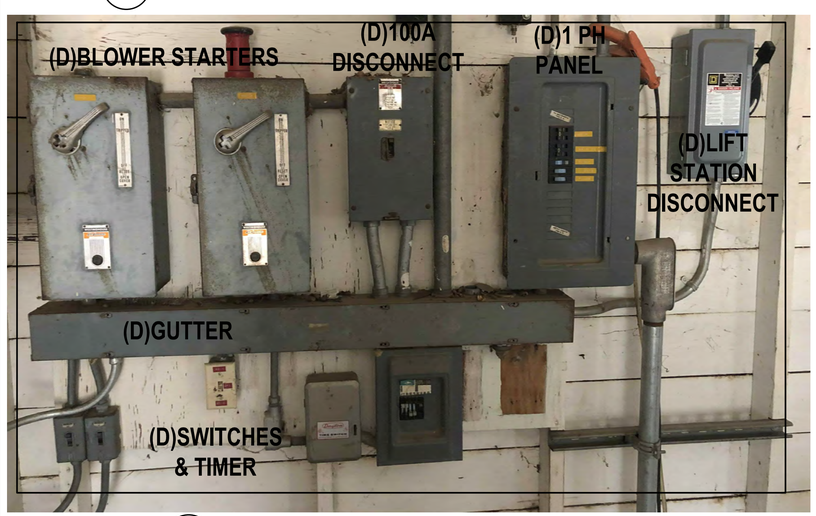

C BHWWTP BUILDING WEST INTERIOR WALL

D BHWWTP BUILDING SOUTH INTERIOR WALL

E BHWWTP BUILDING WEST EXTERIOR WALL

REGISTERED PROFESSIONAL ENGINEER
PHILO CARTER
231
ELECTRICAL
STATE OF CALIFORNIA
100% DRAFT

DESIGNED: B. ANDERSON CADD J. CHEEK TECH. REVIEW: B. ANDERSON DATE: 02/24/2022	SUB SHEET NO. E10.0	TITLE OF SHEET EXISTING ELECTRICAL SITE DETAILS REHABILITATE ASH AND BUCKEYE WASTEWATER TREATMENT PLANTS SEQUOIA & KINGS CANYON NATIONAL PARKS	DRAWING NO. 102 / 177,507 PMIS/PKG NO. 317446 SHEET 133 OF 135

25/04/2022 15:50 MARIO GARCIA G:\CLIENTS\NPS\SEK\317446\DRAWINGS\BUCKEY DWGS\ELEC BUCKEYE\E10.0 EXISTING ELECTRICAL SITE DETAILS.DWG

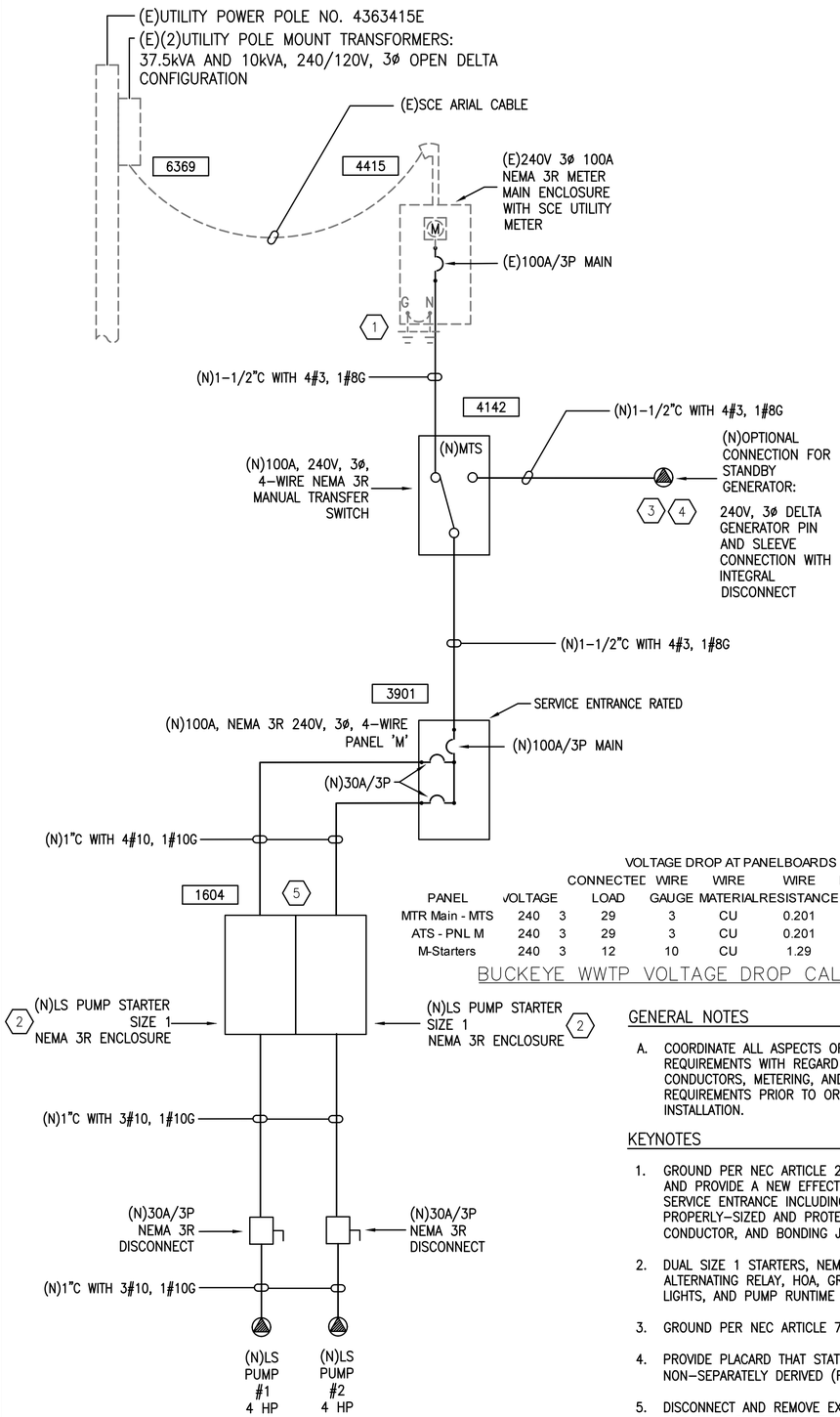

BHWWTP NEW ONE-LINE DIAGRAM

VOLTAGE DROP AT PANELBOARDS

PANEL	VOLTAGE	CONNECTED LOAD	WIRE GAUGE	WIRE MATERIAL	WIRE RESISTANCE	DISTANCE (Feet)	VDROP	% VDROP	TOTAL %VDROP
MTR Main - MTS	240	3 29	3	CU	0.201	10	0.10	0.04	0.04
ATS - PNL M	240	3 29	3	CU	0.201	10	0.10	0.04	0.04
M-Starters	240	3 12	10	CU	1.29	76	2.04	0.85	0.85

BUCKEYE WWTP VOLTAGE DROP CALCULATIONS

GENERAL NOTES

A. COORDINATE ALL ASPECTS OF THE UTILITY COMPANY REQUIREMENTS WITH REGARD TO SECONDARY CONDUCTORS, METERING, AND SPECIFIC GEAR REQUIREMENTS PRIOR TO ORDERING AND OR INSTALLATION.

KEYNOTES (XX)

1. GROUND PER NEC ARTICLE 250. REMOVE EXISTING GROUND AND PROVIDE A NEW EFFECTIVE GROUNDING SYSTEM AT THE SERVICE ENTRANCE INCLUDING TWO GROUND RODS, A PROPERLY-SIZED AND PROTECTED GROUNDING ELECTRODE CONDUCTOR, AND BONDING JUMPER(S) AS REQUIRED BY CODE.
2. DUAL SIZE 1 STARTERS, NEMA 3R ENCLOSURE, AN ALTERNATING RELAY, HOA, GREEN RUN LIGHTS, RED TROUBLE LIGHTS, AND PUMP RUNTIME METERS FOR EACH PUMP.
3. GROUND PER NEC ARTICLE 702.11(B).
4. PROVIDE PLACARD THAT STATES: WARNING: FOR CONNECTION NON-SEPARATELY DERIVED (FLOATING NEUTRAL) SYSTEM ONLY.
5. DISCONNECT AND REMOVE EXISTING ELECTRICAL CONNECTIONS FOR PUMP CONTROL PANEL AND PUMPS, AS WELL AS ALL ELECTRICAL PANELS. REMOVE ALL ASSOCIATED WIRING AND CONDUIT IF NOT RECONNECTING NEW PUMPS. DISCONNECT FEED GOING TO EXISTING PUMP CONTROLLER ONCE NEW LIFT STATION IS COMPLETED AND READY TO BE BROUGHT ONLINE.

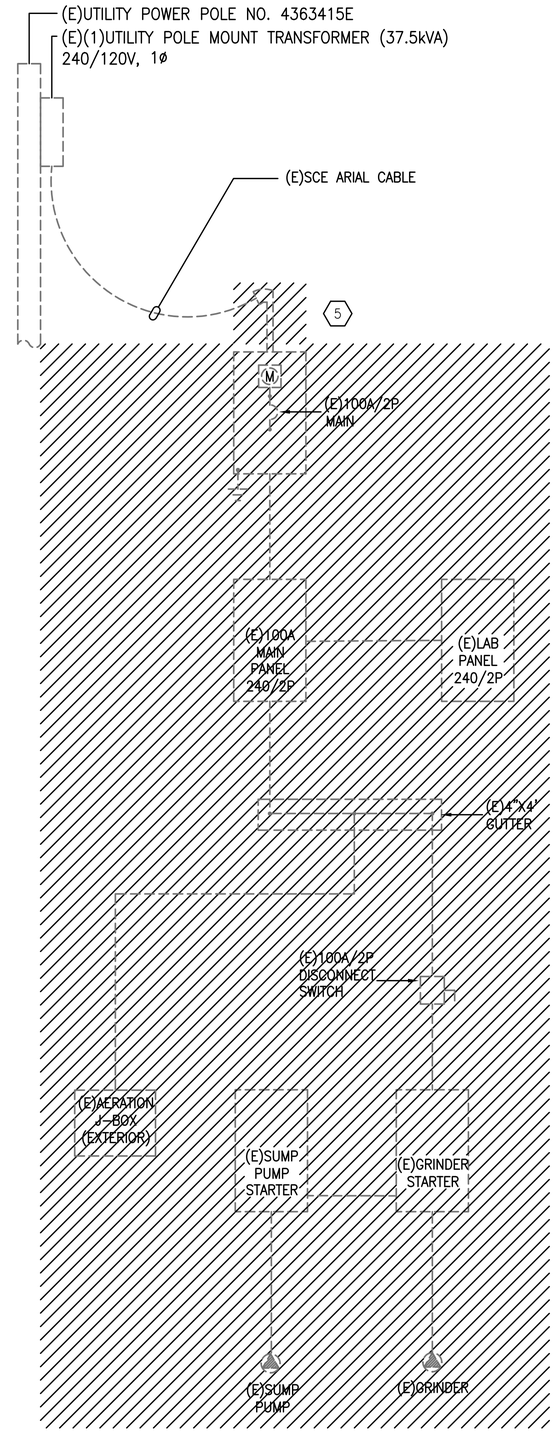

BHWWTP EXISTING SINGLE PHASE ONE-LINE DIAGRAM

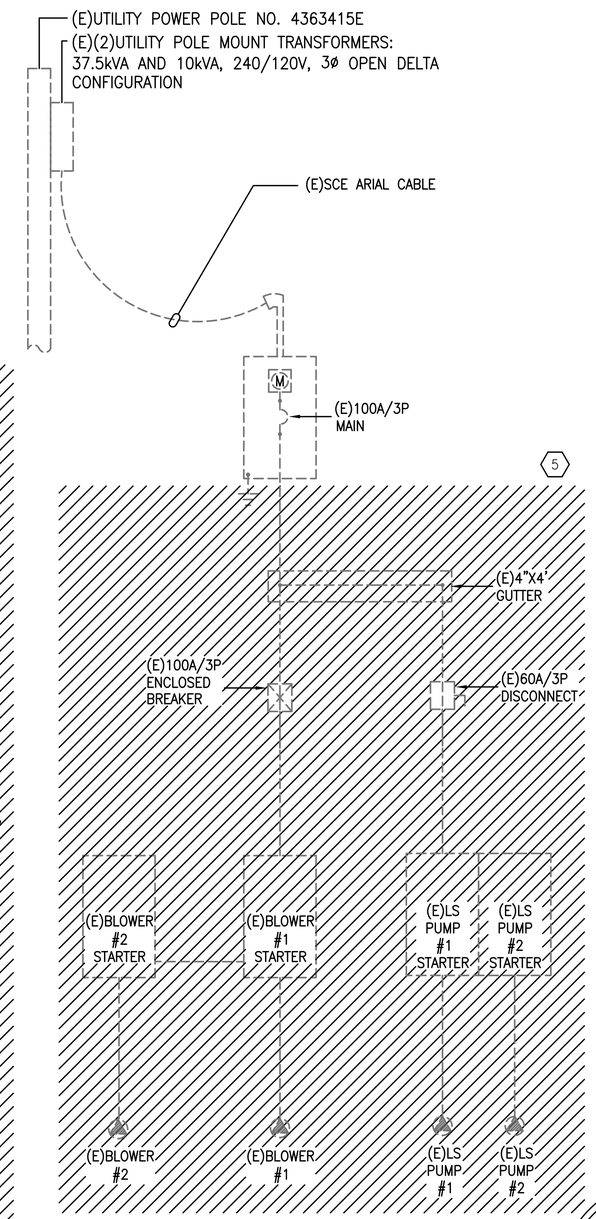

BHWWTP EXISTING 3 PHASE ONE-LINE DIAGRAM

REGISTERED PROFESSIONAL ENGINEER
PHILO CARTER
2431
ELECTRICAL
STATE OF CALIFORNIA
100% DRAFT

DESIGNED: B. ANDERSON	SUB SHEET NO.	TITLE OF SHEET	DRAWING NO.
CADD M. SMITH	E11.0	BHWWTP ONE-LINE DIAGRAM	102 / 177,507
TECH. REVIEW: V. CARTER		REHABILITATE ASH AND BUCKEYE WASTEWATER TREATMENT PLANTS SEQUOIA & KINGS CANYON NATIONAL PARKS	PMIS/PKG NO. 317446
DATE: 04/14/2022			SHEET 134 OF 135

26/04/2022 14:43 MARIO GARCIA G:\CLIENTS\NPS\SEK\317446\DRAWINGS\BUCKEY DWGS\ELEC BUCKEYE\E11.0 BHWWTP ONE-LINE DIAGRAM.DWG

PANELBOARD SCHEDULE

PANEL: M | **PROJECT:** BUCKEYE WWTP REHABILITATION

VOLTAGE: 240/120V | **PHASE:** 3 | **WIRE:** 4 | **AMPERE RATING:** 100A | **SC RATING:** 22 kAIC | **MAIN:** MAIN BREAKER

ENTRY: BOTTOM | **MOUNTING:** SURFACE

LOADS:

	Amps	VA
PHASE A:	50	5995
PHASE B:	39	4620
PHASE C:	51	6085
TOTAL:		16700

LOAD TYPES:
1 = LIGHTING
2 = RECEPTACLES
3 = MISC
4 = MOTOR
5 = KITCHEN

REMARKS:
NEW COMMERCIAL BOLT-ON CIRCUIT BREAKER PANELBOARD.

LOAD (VA)	LOAD SERVED	NOTE	LOAD TYPE	AMPS/ POLES		CKT NO	PHASE	CKT NO	AMPS/ POLES		LOAD TYPE	NOTE	OAD SERVED	LOAD (VA)
1560	PUMP NO. 1 LIFT STATION		4	30	3	1	A	2	30	3	4		PUMP NO. 2 LIFT STATION	1560
1560	---		4	–	–	3	B	4	–	–	4		---	1560
1560	---		4	–	–	5	C	6	–	–	4		---	1560
200	CONTROLLER		3	20	1	7	A	8	20	1	3		FLOWMETER	190
	***** CAUTION - WILD PHASE *****SPACE					9	B	10					***** CAUTION - WILD PHASE *****SPACE	
1000	EVAP COOLER (LAB)		3	30	1	11	C	12	20	1	1		LTG - LAB	165
35	LTG - BATHROOM		1	20	1	13	A	14	20	1	1		LTG - TANK ROOM	230
	***** CAUTION - WILD PHASE *****SPACE					15	B	16					***** CAUTION - WILD PHASE *****SPACE	
540	REC - LAB WEST WALL		2	20	1	17	C	18	20	1	2		REC - LAB NORTH CORNER AND EXT	360
180	REC - LAB NEXT TO PANEL A		2	20	1	19	A	20	20	1	2		REC - LAB EAST WALL	540
	***** CAUTION - WILD PHASE *****SPACE					21	B	22					***** CAUTION - WILD PHASE *****SPACE	
900	REC - TANK ROOM		2	20	1	23	C	24	20	1			SPARE	
1500	(E) HEATER (LAB)		3	20	2	25	A	26	20	1			SPARE	
1500	---		3	–	–	27	B	28					***** CAUTION - WILD PHASE *****SPACE	
	SPARE			20	1	29	C	30					SPACE ONLY	
	SPACE ONLY					31	A	32					SPACE ONLY	
	***** CAUTION - WILD PHASE *****SPACE					33	B	34					***** CAUTION - WILD PHASE *****SPACE	
	SPACE ONLY					35	C	36					SPACE ONLY	
	SPACE ONLY					37	A	38					SPACE ONLY	
	***** CAUTION - WILD PHASE *****SPACE					39	B	40					***** CAUTION - WILD PHASE *****SPACE	
	SPACE ONLY					41	C	42					SPACE ONLY	

LOADING BY TYPE			CONNECTED	NEC CODE	DEMAND FACTOR	DEMAND
LIGHTING			430 VA	210-19	125%	538 VA
RECEPTACLES			2520 VA	220-44	10kVA @ 100%, ELSE @ 50%	2520 VA
MISC.			4390 VA	220-60	100%	4390 VA
MOTOR	LARGEST MOT.:	4680	9360 VA	220-50	100% + LARGEST x 25%	10530 VA
KITCHEN	# OF KIT. UNITS:		0 VA	220-56		0 VA
TOTAL			40 A			43 A

NOTES:
E - DENOTES EXISTING BREAKER TO REMAIN.
N - DENOTES NEW BREAKER REQUIRED.
R - DENOTES TO REUSE EXISTING BREAKER.

BHWWTP PANEL SCHEDULE

LIGHT FIXTURE SCHEDULE

TYPE	MANUFACTURER	PART NUMBER	LAMP SOURCE	INPUT WATTAGE	VOLTAGE	MOUNTING	NOTES
EM1	LITHONIA	ELM2L M12	LED	1	120/277V	WALL	3
EX1	LITHONIA	LHQM-LED-G-HO RO-SD	LED	4.3	120/277V	CEILING	3
S1	LITHONIA	CLX-L96-8000LM-SEF-RDL-MVOLT-EZ1-35K-80CRI-MSD7-WH	LED	70.8	MVOLT	SURFACE	
S3	LITHONIA	CSVT-L48-5000LM-MVOLT-40K-80CRI	LED	42	MVOLT	SURFACE	
W1	LITHONIA	DSXW1 LED-10C-700-30K-T2M-MVOLT-PE-DDBXD	LED	27	MVOLT	WALL	3
W1E	LITHONIA	DSXW1 LED-10C-700-30K-T2M-MVOLT-PE-E20WC-DDBXD	LED	27	MVOLT	WALL	3

General Notes:
1. CONTRACTOR RESPONSIBLE FOR SUPPLYING ALL ACCESSORIES AND EXTRAS FOR A COMPLETE INSTALL.
2. COORDINATE FINISH WITH ARCHITECT.
3. PROVIDE EMERGENCY BATTERY BACKED LED DRIVER FOR SHADED FIXTURES ON LIGHTING PLAN.

BHWWTP LIGHT FIXTURE SCHEDULE

REGISTERED PROFESSIONAL ENGINEER
PHILO CARTER
2331
ELECTRICAL
STATE OF CALIFORNIA
100% DRAFT

DESIGNED: B. ANDERSON	SUB SHEET NO.	TITLE OF SHEET	DRAWING NO. 102 / 177,507
CADD M. SMITH	E11.1	BHWWTP SCHEDULES	PMIS/PKG NO. 317446
TECH. REVIEW: V. CARTER		REHABILITATE ASH AND BUCKEYE WASTEWATER TREATMENT PLANTS SEQUOIA & KINGS CANYON NATIONAL PARKS	SHEET 135 OF 135
DATE: 04/14/2022			

27/04/2022 10:13 JENNIFER CHEEK G:\CLIENTS\NPS\SEKI\317446\DRAWINGS\BUCKEY DWGS\ELEC BUCKEYE\E11.1 BHWWTP PANEL SCHEDULES.DWG