U.S. DEPARTMENT OF TRANSPORTATION
FEDERAL AVIATION ADMINISTRATION
WESTERN-PACIFIC REGION LOS ANGELES, CALIFORNIA

RECONFIGURE M1 ROOM
ZLA LOS ANGELES AIR ROUTE TRAFFIC CONTROL CENTER
PALMDALE, CALIFORNIA
JCN: 1004394, FY '14

[redacted]

REV	APPROVED DATE	DESCRIPTION	JCN	REDLINE DATE	APVD

STATE OF UTAH
STEVEN J. PETERSON
6830295-0301
LICENSED ARCHITECT
02/04/2022

CLH ARCHITECTS ENGINEERS
Case, Lowe & Hart, Inc. 2484 Washington Blvd.
Suite 510 Ogden, Utah 84401-2346
801.399.5821 www.clhac.com

E-Corp
BUILDING A WORLD OF DIFFERENCE

DEPARTMENT OF TRANSPORTATION
FEDERAL AVIATION ADMINISTRATION
ATO - TECHNICAL OPERATIONS WESTERN SERVICE AREA

ARTCC
RECONFIGURE M1 ROOM

TITLE SHEET

PALMDALE LOS ANGELES CTR CA

REVIEWED BY	SUBMITTED BY	APPROVED BY
	ART GAPASIN	DARYL KITCHEN
	PROJECT ENGINEER	MGR. ENGINEERING - LA

DESIGNED	KDL	ISSUED BY	DATE 02.04.2021
DRAWN	KDL	ENGINEERING SERVICES ENROUTE/FSS	DRAWING NO ZLA-D-ARTCC- G001
CHECKED	SJP		

JCN 1004394
REV

2/4/2022 9:03:33 AM 19530

DRAWING INDEX

GENERAL NOTES

A. DIMENSION LINES SHOWN ON ARCHITECTURAL SHEETS ARE FROM COLUMN CENTER LINES AND FACE OF MASONRY, CONCRETE OR FINISHED FACE OF WALL, UNLESS OTHERWISE NOTED.

B. FIELD VERIFY EXISTING CONDITIONS & DIMENSIONS BEFORE DEMOLITION OF BUILDING SYSTEMS. COORDINATE DEMOLITION WITH THE WORK AND NOTIFY COR OF CONFLICTS. NO DEMOLITION WORK SHALL PROCEED UNTIL CONFLICTS ARE RESOLVED TO SATISFACTION OF COR.

C. FINISHES & ASSOCIATED ADJACENT FINISHES AFFECTED BY THE WORK SHALL BE PATCHED AND REPAIRED TO MATCH EXISTING FINISHES. UNLESS OTHERWISE NOTED.

D. VERIFY DEMOLITION REQUIRED TO FACILITATE ROUTING OF MECHANICAL AND ELECTRICAL SYSTEMS. FOR DEMOLITION REQUIRED OUTSIDE OF AREA SHOWN ON ARCHITECTURAL DRAWINGS, REFER TO MECHANICAL AND ELECTRICAL FOR ITEMS TO BE REMOVED.

E. THE BUILDING SHALL BE OCCUPIED BY FAA DURING CONSTRUCTION. COORDINATE THE WORK WITH COR TO AVOID DISRUPTING FAA OPERATIONS.

F. NO DUST, ODOR, FUMES OR DISCERNIBLE NOISE SHALL BE GENERATED BY THE WORK THAT IS DETECTABLE ANYWHERE IN THE FACILITY OUTSIDE THE IMMEDIATE AREA OF CONSTRUCTION WORK.

G. CLEAN CONSTRUCTION AREAS DAILY. CONSTRUCTION DEBRIS & EQUIPMENT SHALL NOT BE LEFT IN OCCUPIED AREAS.

H. MAINTAIN FIRE RATINGS OF FIRE RATED ASSEMBLIES IN FLOORS, WALLS, CEILINGS, ROOFS OR SMOKE BARRIERS PENETRATED BY DUCTS, ELECTRICAL CONDUITS, PIPES AND OTHER PENETRATIONS CAUSED BY THE WORK OF THIS PROJECT WITH AN APPROVED U.L. SYSTEM. WHERE WORK IS REQUIRED ON BUILDINGS WHICH ARE PART OF THE FACILITY, COORDINATE WITH COR TO VERIFY EXISTING CONDITION OF BUILDING SYSTEMS (INCLUDING EXTERIOR WALLS, PARTITIONS, FLOORS, CEILINGS AND ROOFS) BEFORE ANY DEMOLITION OR CONSTRUCTION.

I. DO NOT SCALE DRAWINGS. THE GRAPHICAL SCALE SHOWN IS FOR REFERENCE ONLY AND NOT TO BE USED TO SCALE DRAWINGS FOR CONSTRUCTION.

J. EXISTING FAA COMPUTER AND OTHER SENSITIVE EQUIPMENT SHALL REMAIN OPERATIONAL DURING CONSTRUCTION. COORDINATE WITH COR DEMOLITION WORK THAT MAY CAUSE VIBRATION OR DISRUPTION TO EQUIPMENT IN THE WORK AREA. PROVIDE DUST PROOF PARTITIONS AND BARRIERS AS REQUIRED BY COR TO PROTECT ACTIVE EQUIPMENT. COORDINATE WITH COR NOT TO DISRUPT FAA OPERATIONS. ACCOMMODATE THE 24-HOUR OPERATIONAL FACILITY SCHEDULE AND REQUIREMENTS.

K. PROVIDE OPENINGS THROUGH EXISTING WALLS (GWB, MASONRY AND CONCRETE) FOR PROVISION OF ARCHITECTURAL, MECHANICAL, ELECTRICAL & FIRE PROTECTION EQUIPMENT. COORDINATE SIZE & LOCATION WITH MECHANICAL AND ELECTRICAL.

L. BUILDING CONTAINS HAZARDOUS MATERIALS (HAZMAT). NO HAZMAT IN AREA OF WORK.

M. UNSCHEDULED INTERRUPTIONS IN FAA OPERATIONS SHALL BE NOT TOLERATED. WORK REQUIRING PERMANENT, TEMPORARY OR PARTIAL OUTAGES SHALL BE SCHEDULED AND APPROVED IN WRITING BY COR AT LEAST 10 WORKING DAYS IN ADVANCE OF PERFORMANCE OF WORK.

N. EXISTING BUILDING FLOOR PLANS AND SITE PLANS FOR THE EXISTING BUILDING CONSTRUCTION PRESENTED IN THIS DOCUMENT WERE OBTAINED FROM THE FAA. FIELD VERIFY EXISTING CONDITION PRIOR TO ANY CONSTRUCTION WORK REQUIRED.

O. LIGHTING LEVELS IN CONSTRUCTION WORK AREAS TO FOLLOW OSHA GUIDELINES PER UNITED STATES DEPARTMENT OF LABOR OCCUPATIONAL SAFETY & HEALTH ADMINISTRATION (OSHA) 1926 SAFETY AND HEALTH REQUIREMENTS FOR CONSTRUCTION, SUBPART D, TITLE OCCUPATIONAL HEALTH AND ENVIRONMENTAL CONTROLS, 1926.56 ILLUMINATION. AT NOT TIME SHALL ILLUMINATION BE LESS THAN 5fc IN ALL AREAS OF WORK.

P. PERSONAL PROTECTION EQUIPMENT TO BE WORN AT ALL TIMES BY CONSTRUCTION PERSONNEL WHILE IN THE AREA. THIS PPE SHALL INCLUDE HARD HAT, EYE PROTECTION, GLOVES, STEEL-TOED SHOES AND HEARING PROTECTION.

BUILDING CODE ANALYSIS

1. PER 40 USC 3312 (PUBLIC BUILDINGS AMMENDMENT, 1998), BUILDING CONSTRUCTION OR ALTERED BY A FEDERAL AGENCY SHALL BE CONSTRUCTED OR ALTERED, TO THE MAXIMUM EXTENT FEASABLE, AS DETERMINED BY THE FEDERAL AGENCY, IN COMPLIANCE WITH THE LATEST EDITION OF NATIONALLY RECOGNIZED MODEL BUILDING CODES, INCLUDING ELECTRICAL CODES, FIRE AND LIFE SAFETY CODES, AND PLUMBING CODES.

   STATE AND LOCAL CODES ARE NOT APPLICABLE TO THIS PROJECT.

   STATE AND LOCAL PERMITTING ARE NOT REQUIRED FOR THIS PROJECT.

   APPROPRIATE STATE AND LOCAL OFFICIALS MAY MAKE RECOMMENDATIONS CONCERNING MEASURES WHICH SHOULD BE TAKEN IN THE CONSTRUCTION OR ALTERATION OF THE BUILDING TO TAKE INTO ACCOUNT LOCAL CONDITIONS. DUE CONSIDERATIONS WILL BE GIVEN, BY THE FAA, TO ANY SUCH RECOMMENDATIONS.

   CALIFORNIA ACCESSIBILITY STANDARDS ARE NOT APPLICABLE TO THIS PROJECT.

2. APPLICABLE CODES AND REGULATIONS:
   INTERNATIONAL BUILDING CODE (IBC), 2018 EDITION
   NFPA 101 - LIFE SAFETY CODE, 2018 EDITION
   ABAAS, ADA AND ABA ACCESSIBILITY GUIDELINES FOR BUILDINGS AND FACILITIES (2004)
   OCCUPATIONAL SAFETY & HEALTH ADMINISTRATION (OSHA)
   GENERAL INDUSTRY SAFETY & HEALTH STANDARDS (29 CFR 1910 AND 1926 - CURRENT ISSUE)
   NFPA 70 (NATIONAL ELECTRICAL CODE (NEC), 2017
   INTERNATIONAL FIRE CODE, 2018 EDITION
   INTERNATIONAL MECHANICAL CODE, 2018 EDITION
   NFPA 13, INSTALLATION OF SPRINKLER SYSTEMS, 2019 EDITION
   NFPA 72, NATIONAL FIRE ALARM CODE, 2019 EDITION

3. OCCUPANCY CLASSIFICATION: IBC, GROUP B
   NFPA 101, EXISTING BUSINESS

4. CONSTRUCTION TYPE: TYPE IIb IBC

5. SEISMIC DESIGN CATEGORY: E

VICINITY MAP

AIR ROUTE TRAFFIC
CONTROL CENTER
2555 EAST RANCHO VISTA BLVD
(FORMERLY EAST AVE. P)
PALMDALE, CALIFORNIA
93550

N

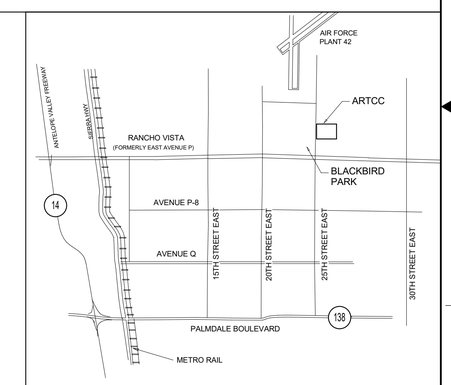

REV	APPROVED DATE	DESCRIPTION	JCN	REDLINE DATE	APVD

STATE OF UTAH
STEVEN J. PETERSON
6830295-0301
LICENSED ARCHITECT
02/04/2022

CLH ARCHITECTS ENGINEERS
Case, Lowe & Hart, Inc. 2484 Washington Blvd. Suite 510 Ogden, Utah 84401-2346
801.399.5821 www.clhae.com

E-Corp
BUILDING A WORLD OF DIFFERENCE

DEPARTMENT OF TRANSPORTATION
FEDERAL AVIATION ADMINISTRATION
ATO - TECHNICAL OPERATIONS — WESTERN SERVICE AREA

ARTCC
RECONFIGURE M1 ROOM

CODE REVIEW

PALMDALE — LOS ANGELES CTR — CA

REVIEWED BY	SUBMITTED BY: ART GAPASIN, PROJECT ENGINEER		APPROVED BY: DARYL KITCHEN, MGR. ENGINEERING - LA
	DESIGNED KDL	ISSUED BY: ENGINEERING SERVICES ENROUTE/FSS	DATE 02.04.2021 — JCN 1004394
	DRAWN KDL		DRAWING NO ZLA-D-ARTCC- G002 — REV
	CHECKED SJP		

16530
2/4/2022 9:03:33 AM

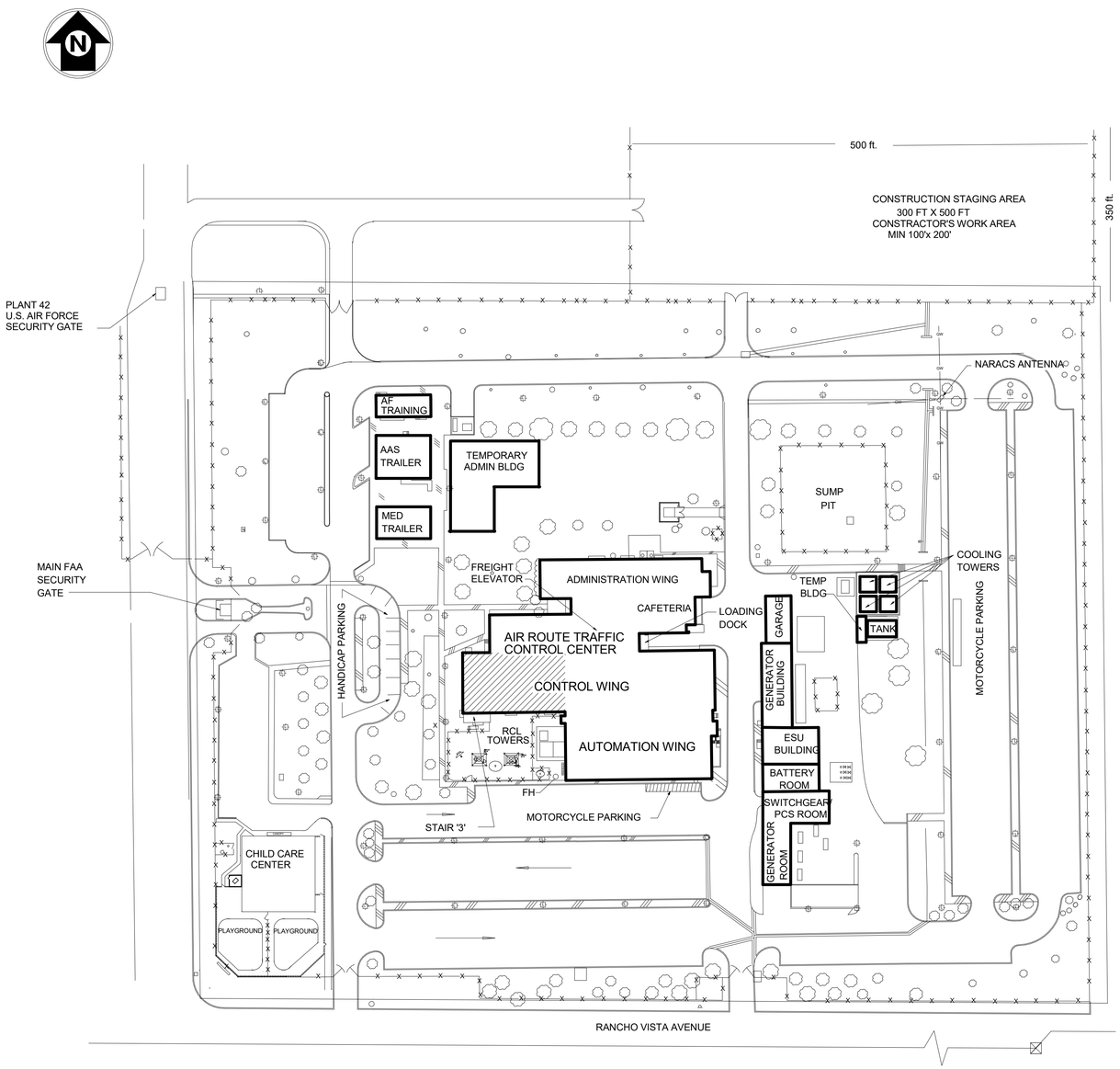

CONSTRUCTION STAGING PLAN

NOT TO SCALE

CONSTRUCTION STAGING PLAN NOTES:

THE FOLLOWING NOTES AND ACCOMPANYING "CONSTRUCTION STAGING PLAN" REPRESENT MANY OF THE MAJOR REQUIREMENTS STATED IN "DIVISION I - GENERAL REQUIREMENTS" OF THE SPECIFICATIONS. THESE NOTES PARAPHRASE DIVISION I REQUIREMENTS AND ARE NOT INTENDED TO MODIFY OR REPLACE ANY DIVISION I REQUIREMENTS.

CONSTRUCTION ACCESS, CONTRACTORS PARKING, CONSTRUCTION OFFICES AND THE EXTENT/SIZE OF THE CONSTRUCTION STAGING AREA MUST BE COORDINATED WITH COR. see specifications div 1 section 01 50 00 temporary facilities

A. CONSTRUCTION ACCESS

A.1 CONTRACTOR'S VEHICLES, PEDESTRIANS AND ALL DELIVERIES TO THE SITE SHALL BE THROUGH THE MAIN FAA SECURITY GATE. THIS GATE IS MANNED 24 HOURS A DAY.

A.2 ALL DELIVERIES SHALL BE SCHEDULED IN ADVANCE WITH COR AND AT TIMES OTHER THAN THE FAA EMPLOYEE SHIFT CHANGES TO AVOID CONGESTION. FAA SHIFT CHANGES OCCUR FROM 6:30 AM TO 8:00 AM AND FROM 2:30 PM TO 4:00 PM.

A.3 THE CONTRACTOR SHALL PROVIDE SIGNAGE TO INDICATE THE ACCESS ROUTE FOR CONSTRUCTION EMPLOYEES AND DELIVERIES ON THE SITE. PROVIDE NECESSARY BARRICADES, LIGHTS, SIGNAGE AND FENCING TO PROTECT, WARN AND DIRECT ALL PERSONS NEAR THE CONSTRUCTION AREAS.

A.4 CONTRACTOR'S ACCESS TO THE BUILDING SHALL BE LIMITED TO THE FOLLOWING LOCATIONS: 1). LOADING DOCK; 2). GRADE LEVEL ENTRANCE TO STAIR "3"; 3). OR AS DIRECTED BY THE COR. FREIGHT ELEVATOR WILL BE USED ONLY WITH COR APPROVAL FOR LARGE OR HEAVY EQUIPMENT.

A.5 CONTRACTOR SHALL KEEP LOADING DOCK AND CAFETERIA ACCESSIBLE AT ALL TIMES FOR FAA DELIVERIES.

A.6 CONTRACTOR'S ROUTE FROM STAGING AREA TO THE AREA OF WORK IS TO BE ESTABLISHED BY THE COR.

B. CONTRACTOR PARKING

B.1 ALL CONTRACTOR PARKING SHALL BE LIMITED TO CONSTRUCTION STAGING AREA AS ESTABLISHED BY THE COR. ADDITIONAL PARKING MAY BE PROVIDED (IF AVAILABLE) BY WRITTEN REQUEST TO THE COR.

B.2 ADDITIONAL PARKING, IF NECESSARY SHALL BE OFF SITE AND COORDINATED BY THE CONTRACTOR

B.3 PROVIDE SIGNAGE AS NECESSARY TO RESERVE THIS AREA FOR CONTRACTOR PARKING ONLY.

C. FAA SECURITY REQUIREMENTS

C.1 AN ADVANCE LIST OF CONSTRUCTION PERSONNEL SHALL BE PROVIDED TO THE COR. TEMPORARY SECURITY BADGES WILL BE ISSUED TO CONSTRUCTION PERSONNEL. EACH CONSTRUCTION EMPLOYEE SHALL CHECK IN AND OUT AT THE MAIN GATE. THE CONTRACTOR SUPERVISORY PERSONNEL SHALL BE RESPONSIBLE FOR THE CONDUCT OF THEIR PERSONNEL WHILE ON SITE. ALL CONTRACTORS' VEHICLES SHALL BE MARKED AS SUCH.

C.2 THE SITE IS A SECURE AREA. ACCESS FOR ALL CONSTRUCTION PERSONNEL IS LIMITED TO THE CONSTRUCTION AREA AND DESIGNATED ACCESS ROUTES AT ALL TIMES.

C.3 FAA ESCORTS are REQUIRED FOR CONSTRUCTION PERSONNEL WORKING WITHIN THE premises.

C.4 THE CONTRACTOR SHALL USE GREAT CARE AND CAUTION WHILE WORKING WITHIN THE AUTOMATION WING, MECHANICAL AND ELECTRICAL ROOMS. ALL WORK MUST BE COORDINATED WITH COR. DISRUPTION OF THE SERVICES OF THIS FACILITY WILL NOT BE PERMITTED.

D. CONSTRUCTION MATERIAL STORAGE

D.1 STORAGE OF CONSTRUCTION MATERIALS AND TRAILERS ON THE SITE SHALL BE LIMITED TO THE CONSTRUCTION STAGING AREAS. MATERIALS SHALL BE NEATLY STORED AND PROTECTED AT ALL TIMES. A CONSTRUCTION FENCE SHALL BE INSTALLED AT THE DIRECTION OF THE COR. CONSTRUCTION MATERIALS, FENCING, VEHICLES, AND THE TRAILER SHALL BE LOCATED At a location determined by the cor. CONTRACTOR SHALL DO NO DIGGING WITHOUT PERMISSION FROM COR. BURIED CABLES (UNDERGROUND UTILITIES) RUN THROUGH THE STAGING AREA AND ELSEWHERE.

D.2 THE CONSTRUCTION STAGING AREA'S EXACT SIZE AND LOCATION SHALL BE DETERMINED AT THE PRECONSTRUCTION CONFERENCE BY THE FAA. REFER TO CONSTRUCTION STAGING PLAN FOR APPROXIMATE INFORMATION.

D.3 CONSTRUCTION LIGHTING SHALL BE PROVIDED AS REQUIRED IN THE CONSTRUCTION STAGING AREA TO ILLUMINATE ADEQUATELY THE AREA FOR SAFE NIGHT WORK. ALL LIGHTING SHALL BE APPROVED BY THE CONTRACTING OFFICER REPRESENTATIVE BEFORE USE. UPON COMPLETION OF CONSTRUCTION, REMOVE ALL CONSTRUCTION LIGHTING. ALL AREAS AND SURFACES DISTURBED SHALL BE REPAIRED AND/OR REPLACED BY THE CONTRACTOR.

E. CONSTRUCTION DEBRIS

E.1 ENCLOSED DUMPSTERS FOR DISPOSAL OF CONSTRUCTION DEBRIS SHALL BE PROVIDED BY THE CONTRACTOR WITHIN THE STAGING AREA. THE AREAS AROUND THE DUMPSTERS SHALL BE KEPT CLEAN AND FREE OF EXCESS DEBRIS AND DUST DURING CONSTRUCTION. ALL DEBRIS SHALL BE REMOVED BY CONTRACTOR.

F. CONSTRUCTION OFFICE

F.1 CONTRACTOR TRAILER SHALL BE LOCATED IN THE CONSTRUCTION STAGING AREA, AS SHOWN ON DRAWING. THE CONTRACTOR SHALL PROVIDE TELEPHONE FOR HIS USE. CONSTRUCTION MATERIALS, FENCING, VEHICLES, AND THE TRAILER SHALL BE LOCATED AT A LOCATION DETERMINED BY THE COR. THE CONTRACTOR SHALL PROVIDE ALL NECESSARY POWER AND WATER FOR THE OFFICE TRAILER.

F.2 not used.

G. CONSTRUCTION TOILET FACILITIES

G.1 PORTABLE CHEMICAL TOILETS SHALL BE PROVIDED BY THE CONTRACTOR AS REQUIRED WITHIN THE CONSTRUCTION STAGING AREA AT THE CONTRACTOR'S EXPENSE.

H. DEMOLITION AND CONSTRUCTION HOURS

H.1 THE CONTRACTOR SHALL NOT INTERFERE WITH THE AIR TRAFFIC CONTROL FUNCTION OF THE FACILITY. DEMOLITION AND CONSTRUCTION NOISE MUST BE MINIMIZED BETWEEN 7:00 AM AND 8:30 PM.

H.2 NOT USED.

H.3 SCHEDULE ALL NOISY DEMOLITION A MINIMUM OF 10 DAYS IN ADVANCE WITH THE COR.

H.4 CONCRETE SAWING, CORE DRILLING, CONCRETE DEMOLITION AND ANCHOR DRILLING WILL BE PERFORMED IN A DUST FREE MANNER BETWEEN THE HOURS OF 1:00 AM AND 5:00 AM ONLY AT PREARRANGED TIMES APPROVED BY THE COR.

I. PARKING LOT DRIVEWAY AND LAWN AREA REPAIR

I.1 UPON COMPLETION OF WORK THE CONTRACTOR SHALL REPAIR ALL PAVED SURFACES, DAMAGED BY CONSTRUCTION ACTIVITIES, TO ORIGINAL CONDITION.

I.2 LAWN AREAS DISTURBED BY CONSTRUCTION ACTIVITY SHALL BE RESTORED TO ORIGINAL CONDITION. DISTURBED LAWN SHALL BE REPAIRED WITH SOD, SEEDING IS UNACCEPTABLE.

J. HAZARDOUS MATERIAL (NOT USED)

K. EQUIPMENT PROTECTION

K.1 IT IS ABSOLUTELY MANDATORY THAT THE CONTRACTOR PROTECT ALL NEW AND EXISTING FAA COMMUNICATION, ELECTRICAL AND MECHANICAL EQUIPMENT, BOTH INSIDE AND OUTSIDE THE BUILDING FROM DAMAGE CAUSED BY IMPACT, WATER, DEBRIS OR DUST. THE FAA SHALL HAVE 24 HOUR ACCESS TO THE PROTECTED EQUIPMENT.

K.2 SHUTDOWN AND CUTOVERS OF ELECTRICAL AND MECHANICAL SYSTEMS SHALL BE ACCOMPLISHED BETWEEN THE HOURS OF 1:00 AM AND 5:00 AM. ALL PREPARATORY WORK SHALL BE COMPLETED PRIOR TO SHUTDOWN, AND CUTOVER SHALL BE SCHEDULED AND COORDINATED WITH THE COR A MINIMUM OF 10 DAYS IN ADVANCE OF THE SHUTDOWN AND CUTOVER. FAA REQUIRES CONTRACTOR TO SUBMIT IN WRITING THE CUT OVER REQUEST WITH A MINIMUM OF 10 DAYS ADVANCE NOTICE.

K.3 THE ARTCC IS A 24 HOUR A DAY, 7 DAY PER WEEK OPERATING FACILITY. IT WILL BE NECESSARY TO COORDINATE ALL CONSTRUCTION ACTIVITY SO AS NOT TO INTERFERE WITH THE FUNCTIONS OF THE ARTCC.

K.4 NO WELDING AND TORCH CUTTING EQUIPMENT SHALL BE POWERED BY THE FACILITY ELECTRICAL SYSTEM. WELDING AND TORCH CUTTING SHALL BE CONDUCTED WITH SMOKE MINIMIZING METHODS. COR APPROVAL SHALL BE GAINED BEFORE WELDING AND TORCH CUTTING.

K.5 CONTRACTOR SHALL RECEIVE PERMISSION FROM COR BEFORE USING POWER SUPPLIES DURING THE WORK.

L. EXCAVATING AND BACKFILLING (NOT USED)

LEGEND:

PROJECT LOCATION

STATE OF UTAH
STEVEN J. PETERSON
6830295-0301
LICENSED ARCHITECT

02/04/2022

CLH ARCHITECTS ENGINEERS
Case, Lowe & Hart, Inc. 2484 Washington Blvd.
Suite 510 Ogden, Utah 84401-2346
801.399.5821 www.clhae.com

E-Corp
BUILDING A WORLD OF DIFFERENCE

REV	APPROVED DATE	DESCRIPTION	JCN	REDLINE DATE	APVD

DEPARTMENT OF TRANSPORTATION
FEDERAL AVIATION ADMINISTRATION
ATO - TECHNICAL OPERATIONS WESTERN SERVICE AREA

ARTCC
RECONFIGURE M1 ROOM
CONSTRUCTION PHASING

PALMDALE LOS ANGELES CTR CA

REVIEWED BY	SUBMITTED BY: ART GAPASIN		APPROVED BY: DARYL KITCHEN
	PROJECT ENGINEER		MGR. ENGINEERING - LA
	DESIGNED KDL	ISSUED BY: ENGINEERING SERVICES ENROUTE/FSS	DATE 02.04.2021 / JCN 1004394
	DRAWN KDL		DRAWING NO ZLA-D-ARTCC- G003 / REV
	CHECKED SJP		

2/4/2022 9:03:34 AM 18530

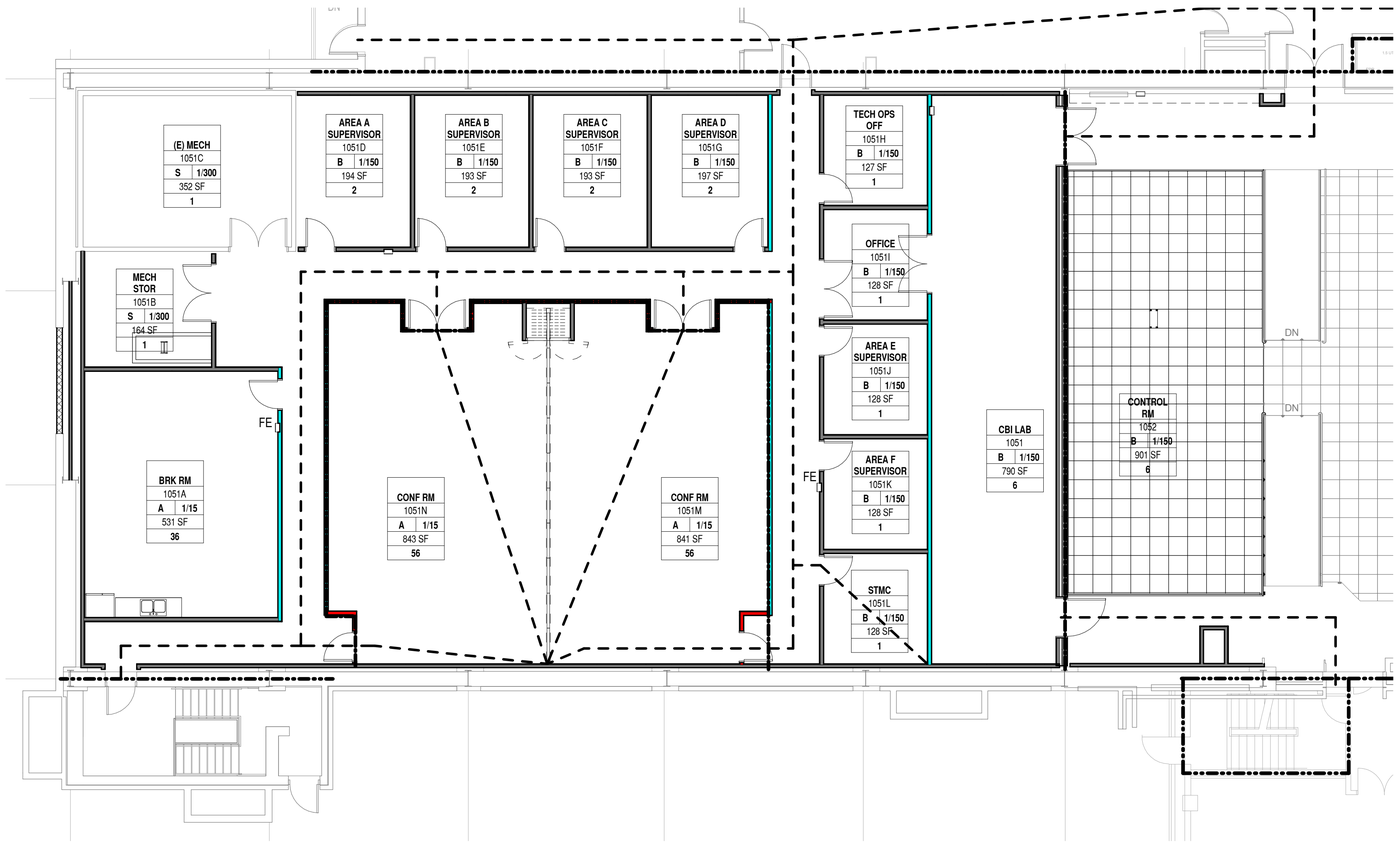

GENERAL SHEET NOTES:

A. THIS DRAWING ILLUSTRATES THE EXTENT AND LAYOUT OF FIRE RATED PARTITIONS AS REQUIRED BY CODE. THIS DRAWING DOES NOT REPRESENT THAT THESE EXISTING PARTITIONS IN FACT CURRENTLY PROVIDE THE REQUIRED FIRE RATING.

B. THIS PROJECT SCOPE INCLUDES FIRE AND SMOKE STOPPING TO COMPLY WITH THE INDICATED RATINGS AT NEW PENETRATIONS, AND WHERE PENETRATIONS ARE CREATED BY THE REMOVAL OF EXISTING ITEMS.

C. FIRE FLOOR IS A MINIMUM ONE HOUR RATED ASSEMBLY.

D. SEE SHEET G-002 FOR CODE REQUIREMENTS AND EXIT DISTANCES.

LIFE SAFETY LEGEND

- 1-HOUR FIRE RATED PARTITION
- 2-HOUR FIRE RATED PARTITION
- EXIT PASSAGEWAY
- COMMON PATH OF TRAVEL

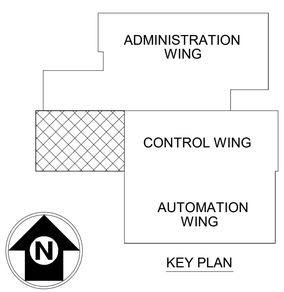

KEY PLAN

A8 FIRE LIFE SAFETY PLAN
1/8" = 1'-0"
0 8' 16' 32'

STATE OF UTAH
STEVEN J. PETERSON
6830295-0301
LICENSED ARCHITECT
02/04/2022

CLH ARCHITECTS ENGINEERS
Case, Lowe & Hart, Inc. 2484 Washington Blvd. Suite 510 Ogden, Utah 84401-2346 801.399.5821 www.clhac.com

E-Corp
BUILDING A WORLD OF DIFFERENCE

REV	APPROVED DATE	DESCRIPTION	JCN	REDLINE DATE	APVD

DEPARTMENT OF TRANSPORTATION
FEDERAL AVIATION ADMINISTRATION
ATO - TECHNICAL OPERATIONS — WESTERN SERVICE AREA

ARTCC
RECONFIGURE M1 ROOM
FIRE LIFE SAFETY PLAN

PALMDALE — LOS ANGELES CTR — CA

REVIEWED BY	SUBMITTED BY	APPROVED BY
	ART GAPASIN	DARYL KITCHEN
	PROJECT ENGINEER	MGR. ENGINEERING - LA

DESIGNED KDL	ISSUED BY	DATE 02.04.2021	JCN 1004394
DRAWN KDL	ENGINEERING SERVICES ENROUTE/FSS	DRAWING NO ZLA-D-ARTCC- G004	REV
CHECKED SJP			

19530
2/4/2022 9:03:36 AM

IBC 2018

TABLE 1014.3
COMMON PATH OF EGRESS TRAVEL WITH SPRINKLERS

OCCUPANCY	MAX DISTANCE
B	100 FT.

TABLE 1016.2
EXIT ACCESS OF EGRESS TRAVEL WITH SPRINKLERS

OCCUPANCY	MAX DISTANCE
B	300 FT.

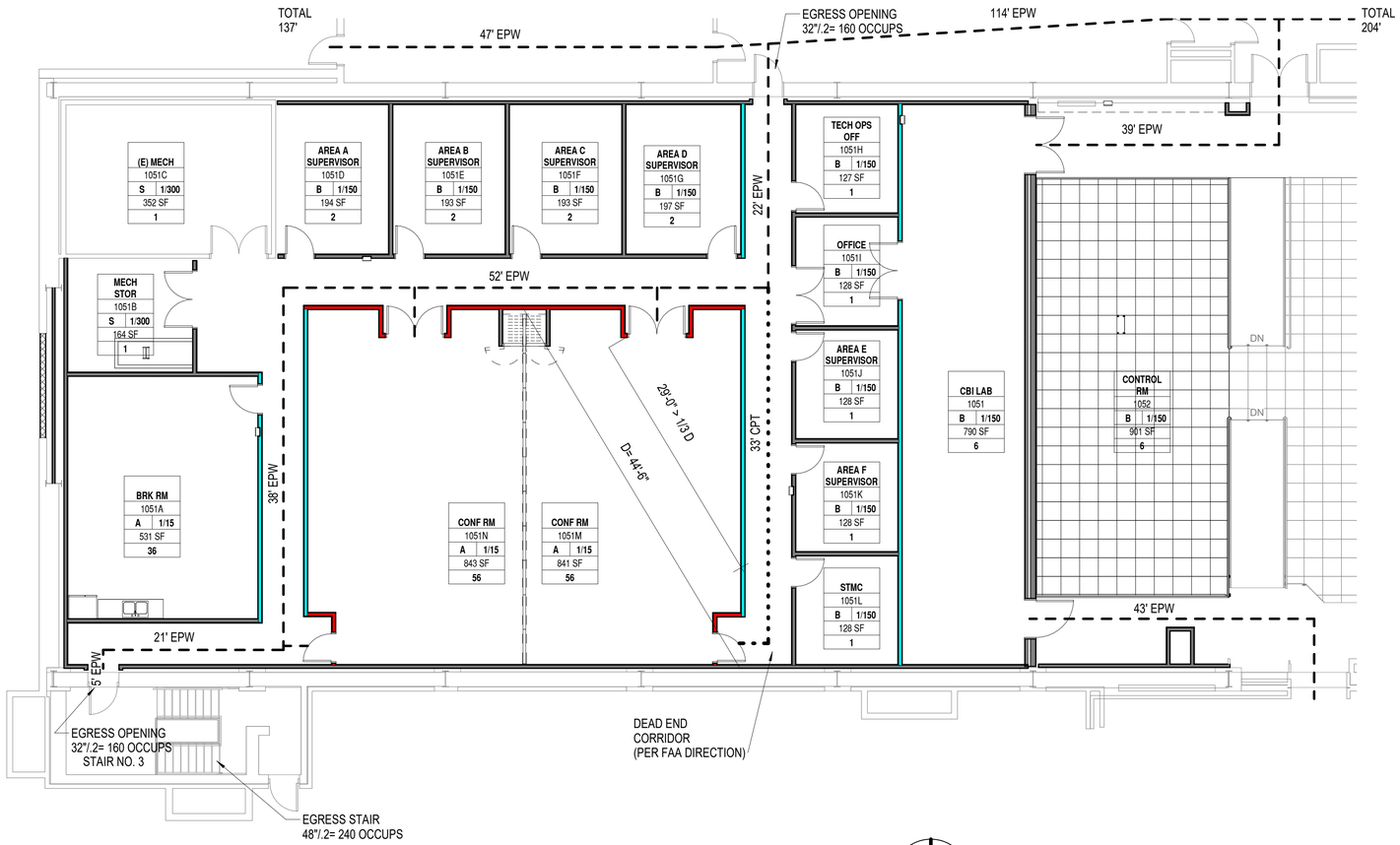

A8 LIFE SAFETY PLAN
1/8" = 1'-0"

0 4' 8' 16'

LIFE SAFETY LEGEND

- 1-HOUR FIRE RATED PARTITION
- 2-HOUR FIRE RATED PARTITION
- EXIT PASSAGEWAY
- COMMON PATH OF TRAVEL

ROOM OCCUPANCY

ROOM NUMBER	NAME	OCCUPANCY CLASS	OCCUPANCY FACTOR	AREA	NUMBER OF OCCUP.
3	STAIR	B	1/150	244 SF	2
1051	CBI LAB	B	1/150	790 SF	6
1051A	BRK RM	A	1/15	531 SF	36
1051B	MECH STOR	S	1/300	164 SF	1
1051C	(E) MECH	S	1/300	352 SF	1
1051D	AREA A SUPERVISOR	B	1/150	194 SF	2
1051E	AREA B SUPERVISOR	B	1/150	193 SF	2
1051F	AREA C SUPERVISOR	B	1/150	193 SF	2
1051G	AREA D SUPERVISOR	B	1/150	197 SF	2
1051H	TECH OPS OFF	B	1/150	127 SF	1
1051I	OFFICE	B	1/150	128 SF	1
1051J	AREA E SUPERVISOR	B	1/150	128 SF	1
1051K	AREA F SUPERVISOR	B	1/150	128 SF	1
1051L	STMC	B	1/150	128 SF	1
1051M	CONF RM	A	1/15	841 SF	56
1051N	CONF RM	A	1/15	843 SF	56
1051O	CORRIDOR	B	1/150	316 SF	3
1051P	CORRIDOR	B	1/150	278 SF	2
1051Q	CORRIDOR	B	1/150	296 SF	2
1051R	CORRIDOR	B	1/150	92 SF	1
1052	CONTROL RM	B	1/150	901 SF	6
MEZZ	Room			Not Placed 7,094 SF	~~185~~

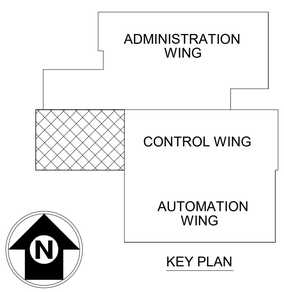

KEY PLAN

REV	APPROVED DATE	DESCRIPTION	JCN	REDLINE DATE	APVD

DEPARTMENT OF TRANSPORTATION
FEDERAL AVIATION ADMINISTRATION
ATO - TECHNICAL OPERATIONS — WESTERN SERVICE AREA

ARTCC
RECONFIGURE M1 ROOM

1st FLOOR LIFE SAFETY PLAN

PALMDALE — LOS ANGELES CTR — CA

STATE OF UTAH
STEVEN J. PETERSON
6830295-0301
LICENSED ARCHITECT
02/04/2022

CLH ARCHITECTS ENGINEERS
Case, Lowe & Hart, Inc. 2484 Washington Blvd.
Suite 510 Ogden, Utah 84401-2346
801.399.5823 www.clhae.com

E-Corp
BUILDING A WORLD OF DIFFERENCE

REVIEWED BY	SUBMITTED BY	APPROVED BY
	ART GAPASIN	DARYL KITCHEN
	PROJECT ENGINEER	MGR. ENGINEERING - LA

DESIGNED	KDL	ISSUED BY	DATE 02.04.2021 / JCN 1004394
DRAWN	KDL	ENGINEERING SERVICES ENROUTE/FSS	DRAWING NO ZLA-D-ARTCC- G005 / REV
CHECKED	SJP		

2/4/2022 9:03:38 AM
19530

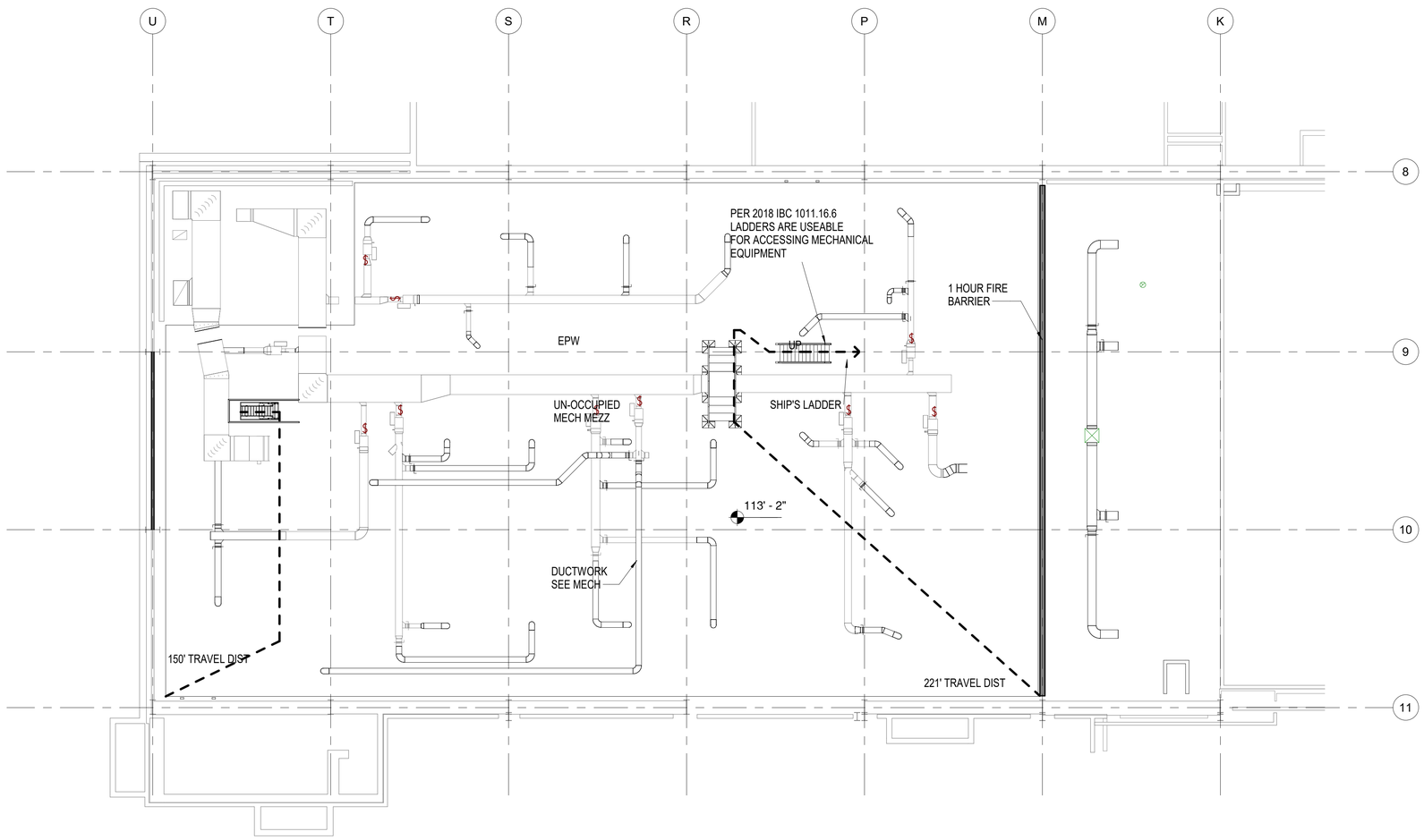

C8 MEZZANINE LIFE SAFETY PLAN
1/8" = 1'-0"

0 4' 8' 16'

IBC 2018

TABLE 1014.3
COMMON PATH OF EGRESS TRAVEL WITH SPRINKLERS

OCCUPANCY	MAX DISTANCE
B	100 FT.

TABLE 1016.2
EXIT ACCESS OF EGRESS TRAVEL WITH SPRINKLERS

OCCUPANCY	MAX DISTANCE
B	300 FT.

LIFE SAFETY LEGEND

- 1-HOUR FIRE RATED PARTITION
- 2-HOUR FIRE RATED PARTITION
- EXIT PASSAGEWAY
- COMMON PATH OF TRAVEL

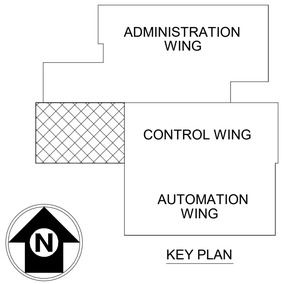

KEY PLAN

STATE OF UTAH
STEVEN J. PETERSON
6830295-0301
LICENSED ARCHITECT
02/04/2022

CLH ARCHITECTS ENGINEERS
Case, Lowe & Hart, Inc. 2484 Washington Blvd.
Suite 510 Ogden, Utah 84401-2346
801.399.5821 www.clhae.com

E-Corp
BUILDING A WORLD OF DIFFERENCE

REV	APPROVED DATE	DESCRIPTION	JCN	REDLINE DATE	APVD

DEPARTMENT OF TRANSPORTATION
FEDERAL AVIATION ADMINISTRATION
ATO - TECHNICAL OPERATIONS WESTERN SERVICE AREA

ARTCC
RECONFIGURE M1 ROOM

MEZZANINE LIFE SAFETY PLAN

PALMDALE LOS ANGELES CTR CA

REVIEWED BY	SUBMITTED BY	APPROVED BY
	ART GAPASIN	DARYL KITCHEN
	PROJECT ENGINEER	MGR. ENGINEERING - LA

DESIGNED	KDL	ISSUED BY	DATE 02.04.2021	JCN 1004394
DRAWN	KDL	ENGINEERING SERVICES ENROUTE/FSS	DRAWING NO ZLA-D-ARTCC- G006	REV
CHECKED	SJP			

2/4/2022 9:03:39 AM
16530

IBC 2018

TABLE 1014.3
COMMON PATH OF EGRESS TRAVEL WITH SPRINKLERS

OCCUPANCY	MAX DISTANCE
B	100 FT.

TABLE 1016.2
EXIT ACCESS OF EGRESS TRAVEL WITH SPRINKLERS

OCCUPANCY	MAX DISTANCE
B	300 FT.

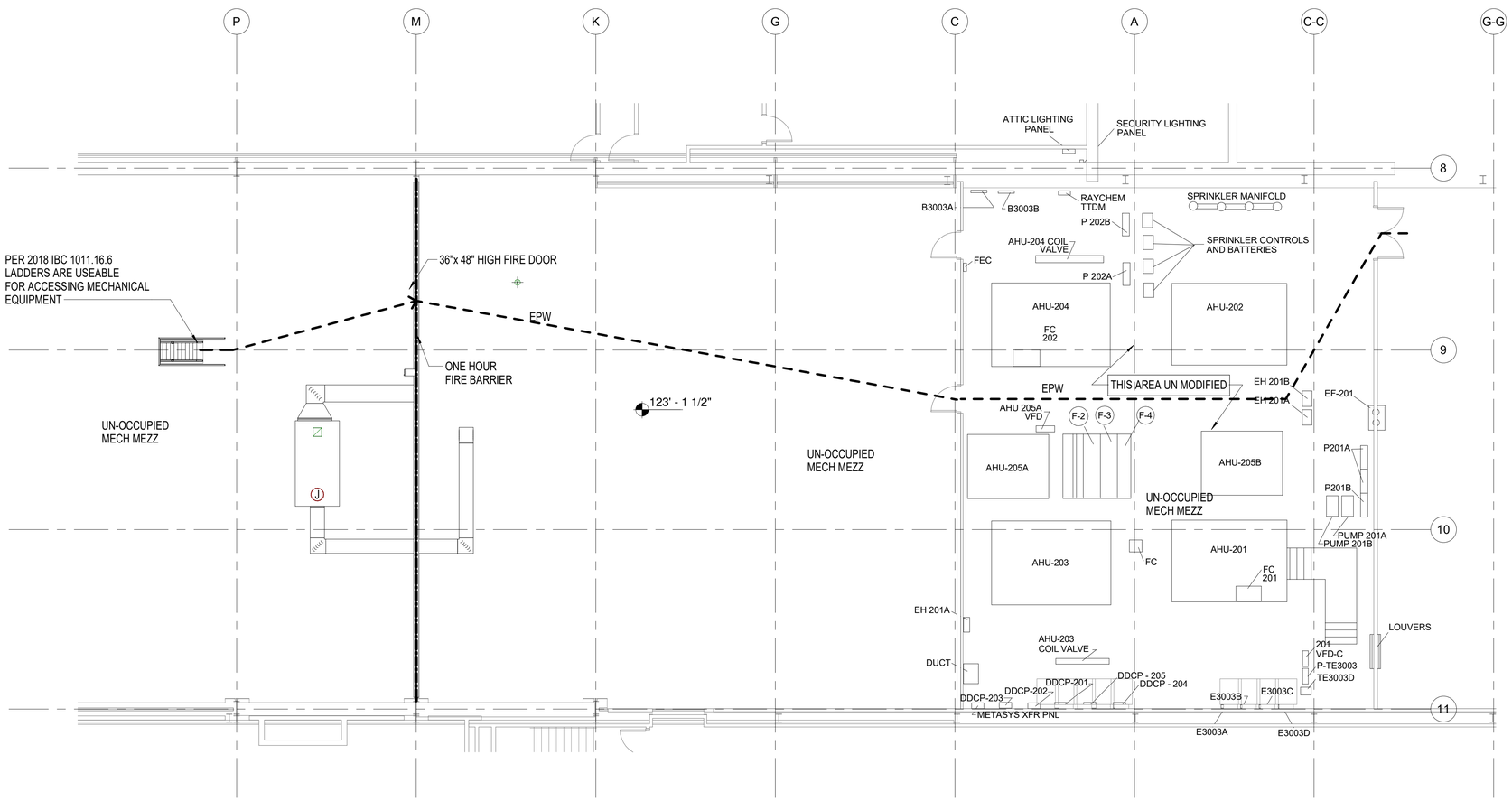

C8 PARTIAL MECH ATTIC PLAN
1/8" = 1'-0"

0 4' 8' 16'

LIFE SAFETY LEGEND

- 1-HOUR FIRE RATED PARTITION
- 2-HOUR FIRE RATED PARTITION
- EXIT PASSAGEWAY
- COMMON PATH OF TRAVEL

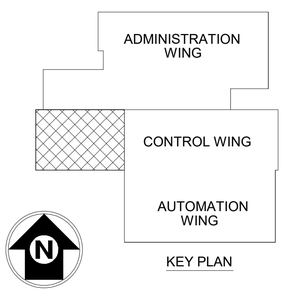

KEY PLAN

REV	APPROVED DATE	DESCRIPTION	JCN	REDLINE DATE	APVD

DEPARTMENT OF TRANSPORTATION
FEDERAL AVIATION ADMINISTRATION
ATO - TECHNICAL OPERATIONS — WESTERN SERVICE AREA

ARTCC RECONFIGURE M1 ROOM

MECH ATTIC LIFE SAFETY PLAN

PALMDALE — LOS ANGELES CTR — CA

STATE OF UTAH
STEVEN J. PETERSON
6830295-0301
LICENSED ARCHITECT
02/04/2022

CLH ARCHITECTS ENGINEERS
Case, Lowe & Hart, Inc. 2484 Washington Blvd. Suite 510 Ogden, Utah 84401-2346
801.399.5821 www.clhae.com

E-Corp
BUILDING A WORLD OF DIFFERENCE

REVIEWED BY	SUBMITTED BY: ART GAPASIN, PROJECT ENGINEER		APPROVED BY: DARYL KITCHEN, MGR. ENGINEERING - LA
	DESIGNED KDL	ISSUED BY: ENGINEERING SERVICES ENROUTE/FSS	DATE 02.04.2021 — JCN 1004394
	DRAWN KDL		DRAWING NO ZLA-D-ARTCC- G007 — REV
	CHECKED SJP		

2/4/2022 9:03:39 AM 19530

STRUCTURAL NOTES :

A. GENERAL

1. THE STRUCTURAL NOTES ARE INTENDED TO COMPLEMENT THE PROJECT SPECIFICATIONS WHICH ARE PART OF THE CONSTRUCTION DOCUMENTS. SPECIFIC NOTES AND DETAILS ON THE DRAWINGS SHALL GOVERN OVER THE STRUCTURAL NOTES AND TYPICAL DETAILS.
2. THESE DRAWINGS (AND, WHERE APPLICABLE, ACCOMPANYING WRITTEN SPECIFICATIONS) ARE THE ONLY CONTRACT DOCUMENTS PROVIDED BY ARW ENGINEERS FOR THE PROJECT REPRESENTED HEREIN. NOTHING IN ANY DIGITAL MODEL OR DIGITAL FILE RELATED TO THIS PROJECT SHALL BE TAKEN TO SUPERSEDE ANY INFORMATION SHOWN IN THESE DRAWINGS (INCLUDING, BUT NOT LIMITED TO, DIMENSIONS, SIZES, ETC).
3. THE ARCHITECTURAL DRAWINGS ARE THE PRIME CONTRACT DRAWINGS. THE STRUCTURAL DRAWINGS ARE SUPPLEMENTARY TO AND MUST BE USED IN CONJUNCTION WITH THE ARCHITECTURAL DRAWINGS AND OTHER CONSULTANTS DRAWINGS. ALL OMISSIONS OR CONFLICTS BETWEEN THE VARIOUS ELEMENTS OF THE WORKING DRAWINGS AND/OR SPECIFICATIONS SHALL BE BROUGHT TO THE ATTENTION OF THE ARCHITECT AND STRUCTURAL ENGINEER BEFORE PROCEEDING WITH ANY WORK INVOLVED. IN CASE OF CONFLICT, FOLLOW THE MOST STRINGENT REQUIREMENT AS DIRECTED BY THE ARCHITECT AT NO ADDITIONAL COST TO THE OWNER.
4. SEE SPECIFICATIONS FOR REQUIRED SUBMITTALS. SUBMITTALS SHALL BE MADE IN A TIMELY MANNER AS INDICATED IN SPECIFICATIONS. REVIEW OF SUBMITTALS BY ARW ENGINEERS IS FOR GENERAL COMPLIANCE ONLY AND IS NOT INTENDED AS APPROVAL. CONTRACTOR IS RESPONSIBLE FOR VERIFYING ALL SIZES, DIMENSIONS, AND ELEVATIONS ON SUBMITTALS AS RELATED TO DESIGN DOCUMENTS. PREPARATION OF SHOP DRAWINGS FOR STRUCTURAL ELEMENTS WILL REQUIRE INFORMATION (I.E. DIMENSIONS, ETC.) FOUND IN THE ARCHITECTURAL, STRUCTURAL, AND OTHER CONSULTANTS DRAWINGS.
5. THE CONTRACTOR SHALL VERIFY ALL CONDITIONS AND DIMENSIONS AT THE SITE. IF ACTUAL CONDITIONS DIFFER FROM THOSE SHOWN ON CONTRACT DOCUMENTS, CONTRACTOR SHALL NOTIFY ARCHITECT PRIOR TO FABRICATION OR CONSTRUCTION OF ANY AFFECTED ELEMENTS.
6. THE CONTRACTOR SHALL COORDINATE AND VERIFY ALL LOCATIONS AND SIZES OF MECHANICAL EQUIPMENT OR OTHER EQUIPMENT BEFORE FABRICATING AND ERECTING STRUCTURAL ELEMENTS. SIZES AND LOCATIONS THAT DIFFER FROM THOSE SHOWN ON THE CONTRACT DOCUMENTS SHALL BE REPORTED TO THE ARCHITECT.
7. THE CONTRACTOR SHALL SUBMIT A WRITTEN REQUEST TO THE ARCHITECT FOR ARCHITECT AND/OR ENGINEER APPROVAL BEFORE PROCEEDING WITH ANY CHANGES, MODIFICATIONS, OR SUBSTITUTIONS.
8. OBSERVATION VISITS TO THE SITE BY ARW ENGINEERS FIELD REPRESENTATIVES SHALL NEITHER BE CONSTRUED AS INSPECTION NOR APPROVAL OF CONSTRUCTION.
9. DURING AND AFTER CONSTRUCTION, BUILDER AND/OR OWNER SHALL KEEP LOADS ON STRUCTURE WITHIN THE LIMITS OF DESIGN LOADS AS NOTED IN THESE DOCUMENTS.
10. TYPICAL OR SIMILAR DETAILS AND SECTIONS SHALL APPLY WHERE SPECIFIC DETAILS ARE NOT SHOWN. TYPICAL OR SIMILAR DETAILS REFER TO THE CONDITION ADDRESSED AND ARE NOT NECESSARILY DETAILS LABELED "TYPICAL" OR "SIMILAR" IN THE PLANS AND DOCUMENTS.
11. DRAWINGS AND DETAILS HAVE BEEN PREPARED WITH THE INTENT TO VISUALLY REPRESENT INFORMATION PROVIDED IN SCALED FORM; HOWEVER CONTRACTOR/SUPPLIERS SHOULD NOT SCALE PLANS OR DETAILS FOR DIMENSIONAL INFORMATION.
12. THE CONTRACTOR SHALL PROVIDE ADEQUATE TEMPORARY SHORING AND BRACING FOR ALL STRUCTURAL ELEMENTS UNTIL THE ENTIRE STRUCTURAL SYSTEM IS COMPLETED. DESIGN OF ALL SHORING AND BRACING IS BY OTHERS AT NO ADDITIONAL COST TO THE OWNER.
13. ENGINEER SHALL NOT BE RESPONSIBLE FOR ACTIVITIES UNDER CONTROL OF THE CONTRACTOR SUCH AS CONSTRUCTION SITE SAFETY, MEANS, METHODS AND SEQUENCING OF CONSTRUCTION. ENGINEER SHALL NOT BE RESPONSIBLE FOR FABRICATION, ERECTION AND CONSTRUCTION REQUIREMENTS AS PRESCRIBED BY OSHA OR OTHER REGULATORY AGENCIES REGARDLESS OF INDICATIONS IN THESE DOCUMENTS.
14. NOTICE OF COPYRIGHT: THESE STRUCTURAL DRAWINGS ARE HEREBY COPYRIGHTED BY ARW ENGINEERS, ALL RIGHTS RESERVED. THESE DOCUMENTS DEFINE A STRUCTURE AND ARE INSTRUMENTS OF SERVICE, FOR ONE USE ONLY. REPRODUCTION AND DISTRIBUTION OF THESE DRAWINGS IS ONLY ALLOWED AS REQUIRED FOR REGULATORY AGENCIES AND FOR CONVEYANCE OF INFORMATION TO PARTIES INVOLVED IN THE CONSTRUCTION OF THIS PROJECT. THESE DOCUMENTS SHALL NOT BE REPRODUCED OR COPIED, IN PART OR WHOLE BY ANY PARTY FOR USE IN PREPARATION OF SHOP DRAWINGS OR OTHER SUBMITTALS.
15. WHERE THE WORD "SHALL" OCCURS IN THESE DRAWINGS AND ANY ACCOMPANYING SPECIFICATIONS, IT IS CONSIDERED A MANDATORY OBLIGATION AND SYNONYMOUS WITH THE PHRASE "HAS DUTY TO".

B. STATEMENT OF SPECIAL INSPECTIONS AND SPECIAL INSPECTIONS

1. THE DESIGNATED SEISMIC/WIND SYSTEMS AND SEISMIC/WIND-FORCE-RESISTING SYSTEMS THAT ARE SUBJECT TO SPECIAL INSPECTIONS IN ACCORDANCE WITH CBC SECTION 1705.11 AND 1705.12 ARE IDENTIFIED IN THE SPECIAL INSPECTION SCHEDULE ON SHEET S002.
2. SPECIAL INSPECTIONS AND TESTING ARE TO BE PROVIDED AS REQUIRED BY CBC SECTIONS 1704 THROUGH 1705 AND OTHER APPLICABLE SECTIONS OF THE CBC. THE TYPE AND FREQUENCY OF TESTING AND SPECIAL INSPECTIONS SHALL BE AS NOTED IN THE SPECIAL INSPECTION SCHEDULE, JOB SPECIFICATIONS, AND ACCORDANCE WITH CBC SECTION 110 AND CHAPTER 17. CONTRACTOR SHALL COORDINATE AND COOPERATE WITH REQUIRED INSPECTIONS.
3. ALL TESTING AND SPECIAL INSPECTION SHALL BE PROVIDED BY A QUALIFIED INDEPENDENT SPECIAL INSPECTION AGENCY IN ACCORDANCE WITH CBC 1704 AND AS OUTLINED IN THE JOB SPECIFICATIONS. REPORTS OF FINDINGS OR DISCREPANCIES SHALL BE NOTED AND FORWARDED TO THE CONTRACTOR, ARCHITECT, ENGINEERS, AND BUILDING OFFICIAL IN A TIMELY MANNER.
4. STRUCTURAL OBSERVATION VISITS SHALL BE PERFORMED BY A REPRESENTATIVE FROM ARW ENGINEERS IN ACCORDANCE WITH THE CONTRACT AS NEEDED TO OBSERVE THE CONSTRUCTION OF CRITICAL BUILDING ELEMENTS (I.E. FOOTINGS, BRACED FRAMES, MOMENT FRAMES, DRAG STRUTS AND THEIR CONNECTIONS, COLLECTORS, AND ROOF AND FLOOR DIAPHRAGMS). STRUCTURAL OBSERVATION REPORTS FOR EACH VISIT SHALL BE SENT DIRECTLY TO THE ARCHITECT FOR DISTRIBUTION TO THE CONTRACTOR AND BUILDING OFFICIAL. STRUCTURAL OBSERVATION VISITS SHALL NEITHER BE CONSTRUED AS SPECIAL INSPECTION NOR APPROVAL OF COMPLETED CONSTRUCTION.
5. IN ACCORDANCE WITH CBC 1704.4, THE CONTRACTOR SHALL SUBMIT A WRITTEN CONTRACTOR'S STATEMENT OF RESPONSIBILITY TO THE BUILDING OFFICIAL AND OWNER.

C. BASIS OF DESIGN

1. GOVERNING BUILDING CODE : CALIFORNIA BUILDING CODE (CBC) 2019
   RISK CATEGORY : IV
2. SUSPENDED FLOOR LOADS
   a. LIVE LOAD = 20 PSF
   b. DEAD LOAD = 12 PSF
3. SEISMIC DESIGN :
   a. SEISMIC IMPORTANCE FACTOR, I_E : 1.5
   b. SITE CLASS : D (DEFAULT)
   c. MAPPED SPECTRAL RESPONSE ACCELERATIONS : $S_S = 1.835$, $S_1 = 0.764$
   d. SPECTRAL RESPONSE COEFFICIENTS : $S_{DS} = 1.468$, $S_{D1} = 0.866$
   e. SEISMIC DESIGN CATEGORY : D
   f. BASIC SEISMIC-FORCE-RESISTING SYSTEM : LIGHT-FRAME COLD-FORMED STEEL SHEAR WALLS
   g. DESIGN BASE SHEAR : $V_{WS} = 0.339$ *W , $V_{EW} = 0.339$ *W
   h. SEISMIC RESPONSE COEFFICIENT, C_S : 0.339
   i. RESPONSE MODIFICATION FACTOR, R : 6.5
   j. ANALYSIS PROCEDURE : EQUIVALENT LATERAL FORCE

Structural Sheet Index

D. STRUCTURAL STEEL

1. STRUCTURAL STEEL SHALL BE FABRICATED AND ERECTED IN ACCORDANCE WITH THE LATEST EDITION OF THE FOLLOWING:
   a. ANSI/AISC 360-10 "SPECIFICATION FOR STRUCTURAL STEEL BUILDINGS", WITH "COMMENTARY" AND "SUPPLEMENTS" AS REQUIRED BY BUILDING CODE.
   b. AISC 303-10 "CODE OF STANDARD PRACTICE FOR STEEL BUILDINGS AND BRIDGES" EXCLUDING THE FOLLOWING SECTIONS: 4.4, 4.4.1, AND 4.4.2.
   c. AISI "SPECIFICATIONS FOR THE DESIGN OF COLD-FORMED STEEL STRUCTURAL MEMBERS".
   d. AISC "SPECIFICATION FOR STRUCTURAL JOINTS USING ASTM A325 OR A490 BOLTS".
   e. AWS D1.1 AND 1.3, "STRUCTURAL WELDING CODE" (EXCEPT SPECIFIC ITEMS DO NOT APPLY IF THEY CONFLICT WITH AISC).
   f. ANSI/AISC 341-10 "SEISMIC PROVISIONS FOR STRUCTURAL STEEL BUILDINGS".
   g. AWS D1.8, "STRUCTURAL WELDING CODE - SEISMIC".
2. STRUCTURAL STEEL SHALL COMPLY WITH THE FOLLOWING:
   a. WIDE FLANGE SHAPES AND WT SHAPES - ASTM A992
   b. OTHER SHAPES AND PLATES - ASTM A-36 (UNO)
   c. HOLLOW STRUCTURAL SECTIONS (HSS) - ASTM A-500, GRADE C FOR SQUARE, RECTANGULAR AND ROUND SHAPES (FY = 50 KSI FOR SQUARE AND RECTANGULAR SHAPES AND 46 KSI FOR ROUND SHAPES)
   d. STAINLESS STEEL SHAPES, PLATES, AND FASTENERS – ASTM 304
   e. DEFORMED BAR ANCHORS (DBA) - ASTM A-496, WELDED IN ACCORDANCE WITH AWS D1.1
   f. HEADED STUD ANCHORS (HSA) - ASTM A-108, GRADE 1015 STEEL AND WELDED IN ACCORDANCE WITH AWS D1.1 FOR TYPE "B". USE 3/4" DIAMETER STUDS, UNLESS NOTED OTHERWISE.
   g. THREADED ROD - ASTM A-449.
   h. NON-SHRINK GROUT - ASTM C110. NON-SHRINK GROUT SHALL BE PRE-PACKAGED, NON-METALLIC, WITH A 28-DAY COMPRESSIVE STRENGTH OF 6,000 PSI.
3. CONNECTIONS SHALL COMPLY WITH THE STRUCTURAL DRAWINGS UNLESS WRITTEN APPROVAL TO CHANGE IS GIVEN BY THE STRUCTURAL ENGINEER.
4. ALL SHOP FABRICATIONS SHALL BE PERFORMED BY AN APPROVED FABRICATOR IN ACCORDANCE WITH SECTIONS 1702 AND 1704 OF THE CBC OR WITH SHOP INSPECTION BY AN INDEPENDENT AGENCY IN ACCORDANCE WITH SECTION 1704.2.5 OF THE CBC.
5. WELDING
   a. ALL WELDING AND CUTTING SHALL BE PERFORMED BY AWS QUALIFIED WELDERS IN ACCORDANCE WITH ANSI/AWS D1.1 (LATEST EDITION).
   b. USE E-70XX ELECTRODES UNLESS NOTED OTHERWISE. E-60XX MAY BE USED FOR WELDING STEEL DECKS.
   c. ALL INTERSECTING STEEL SHAPES WHICH ARE NOT CONNECTED WITH BOLTS SHALL BE WELDED TOGETHER WITH A FILLET WELD ALL AROUND UNLESS NOTED OTHERWISE. WHERE WELD SIZES ARE NOT SHOWN, USE THE FOLLOWING:
      1. WHERE THE THICKNESS OF THE CONNECTED PARTS IS EQUAL TO OR THICKER THAN 1/4", WELD SIZE SHALL BE 1/16" LESS THAN THE THICKNESS OF THE THINNEST PART.
      2. WHERE ANY OF THE CONNECTED PARTS IS LESS THAN 1/4" THICK, WELD SIZE SHALL BE THE SAME AS THE THICKNESS OF THE THINNEST PART.
   d. WELDING OF HSA'S (HEADED STUD ANCHORS) AND DBA'S (DEFORMED BAR ANCHORS) SHALL CONFORM TO THE MANUFACTURER'S SPECIFICATIONS AND AWS D1.1. REINFORCING BARS SHALL NOT BE SUBSTITUTED FOR HSA'S OR DBA'S.
   e. WHEREVER POSSIBLE, WELDS SHALL BE SHOP WELDS. SPECIAL CONSIDERATIONS, SUCH AS ITEMS WHICH MAY NEED ADJUSTMENT AT THE SITE, REQUIRE THAT SOME WELDS BE FIELD WELDS. WHERE QUESTIONS OR DISCREPANCIES OCCUR THE CONTRACTOR SHALL COORDINATE THE WORK BETWEEN THE SHOP FABRICATOR AND THE STEEL ERECTOR.
   f. SPECIAL PROVISIONS FOR SFRS (SEISMIC FORCE RESISTING SYSTEM):
      1. ALL WELDS DESIGNATED AS DEMAND CRITICAL WELDS SHALL BE MADE WITH FILLER METALS MEETING THE REQUIREMENTS SPECIFIED IN CLAUSES 6.1, 6.2, AND 6.3 OF AWS D1.8.
      2. ALL OTHER WELDS THAT ARE PART OF THE SFRS SHALL BE MADE WITH FILLER METALS MEETING THE REQUIREMENTS SPECIFIED IN CLAUSE 6.1 OF AWS D1.8.
      3. BUTT WELDS IN MEMBERS WITH DIFFERENT THICKNESSES, SUCH AS COLUMN SPLICES, SHALL BE TAPERED AND MADE IN SUCH A MANNER THAT THE TRANSITION DOES NOT EXCEED 1 IN 2-1/2 INCHES. THE TRANSITION SHALL BE ACCOMPLISHED BY CHAMFERING THE THICKER PART, TAPERING THE WIDER PART, SLOPING THE WELD METAL OR BY A COMBINATION OF THESE
6. BOLTING
   a. UNLESS NOTED OTHERWISE, ALL STRUCTURAL STEEL TO STEEL CONNECTIONS SHALL USE HIGH STRENGTH BOLTS CONFORMING TO ASTM A-325.
   b. UNLESS NOTED OTHERWISE, ALL BOLTING IS CLASSIFIED AS NON-SLIP CRITICAL BEARING TYPE CONNECTIONS WITH THREADS INCLUDED IN SHEAR PLANE. TIGHTEN BOLTS TO A SNUG TIGHT CONDITION, WITH ALL PLIES OF THE JOINT IN FIRM CONTACT.
   c. WHERE OVERSIZED OR SLOTTED HOLES OCCUR IN THE OUTER PLY, AN ASTM F436 WASHER OR 5/16" THICK COMMON PLATE WASHER SHALL BE USED AS REQUIRED TO COMPLETELY COVER THE HOLE.
   d. BOLTS SHALL BE CENTERED IN SLOTTED HOLES, UNLESS NOTED OTHERWISE.
   e. WHERE A STEEL BEAM TO BEAM CONNECTION IS NOT SHOWN, PROVIDE AN AISC STANDARD FRAMED CONNECTION SIZED FOR 1/2 OF THE TOTAL LOAD CAPACITY OF THE BEAM FOR THE SPAN AND STEEL SPECIFIED.
7. METAL DECKING
   a. UNLESS NOTED OTHERWISE, METAL ROOF DECK SHALL BE 20 GAUGE TYPE B GALVANIZED STEEL DECK. SEE ROOF DECK SCHEDULE FOR ATTACHMENTS.
   b. ALL DECK SHALL BE CONTINUOUS OVER 3-SPANS. WHERE NOT POSSIBLE, THE DECK SUPPLIER/CONTRACTOR SHALL PROVIDE HEAVIER GAUGE DECK AS NEEDED TO PROVIDE THE EQUIVALENT PERFORMANCE OF THE SPECIFIED DECK WITH 3-SPAN CONTINUITY.
   c. SEE TYPICAL DETAILS FOR SUPPORT OF DECK AT OPENINGS.
   d. PAINTED STEEL DECK SHALL CONFORM TO ASTM A1008 AND GALVANIZED STEEL DECK SHALL CONFORM TO A653 GRADE G60.
   e. BUILDING ELEMENTS MAY BE SUPPORTED BY HANGING DIRECTLY FROM METAL DECKING, PROVIDED THAT THE TOTAL WEIGHT PER CONNECTION IS LESS THAN 50 LBS AND THAT THE ATTACHMENT TO THE DECKING IS DISTRIBUTED ACROSS AT LEAST TWO RIBS AND SPACED AT LEAST 6 FEET APART IN ANY DIRECTION.
8. PROVIDE FULL DEPTH WEB STIFFENER PLATES AT EACH SIDE OF STEEL BEAMS AT ALL BEARING (EXCEPT SECONDARY FRAMING) POINTS. STIFFENER PLATES SHALL BE THICKNESS SHOWN UNLESS NOTED OTHERWISE AND SHALL BE WELDED BOTH SIDES WITH FILLET WELDS ALL AROUND.

FLANGE WIDTH	STIFFENER THICKNESS	WELD THICKNESS
< 8 1/4"	1/4"	3/16"
8 1/4" < BF < 12 1/2"	3/8"	1/4"
12 1/2" < BF < 18"	1/2"	5/16"

9. FABRICATORS AND SUPPLIERS SHALL COORDINATE PAINT/FINISHES WITH REQUIREMENTS FOR DIRECT APPLIED INSULATION, FIREPROOFING, ETC. AS NOTED IN THE PROJECT SPECIFICATIONS.
10. WHEN DETERMINING THE FIRE RESISTANCE OF ASSEMBLIES, USE THE FOLLOWING: STEEL ROOF MEMBERS ARE CONSIDERED UN-RESTRAINED AND STEEL FLOOR FRAMING MEMBERS ARE CONSIDERED RESTRAINED.
11. UNLESS NOTED OTHERWISE, ALL HORIZONTAL FRAMING MEMBERS SHALL BE ERECTED WITH THE NATURAL CROWN UP.
12. UNLESS OTHERWISE SHOWN OR DETAILED IN THE PLANS, ALL STEEL COLUMNS, BEAMS, BRACES, STRUTS, ETC. SHALL BE CONTINUOUS BETWEEN CONNECTIONS OR SUPPORTS. SPLICES IN MEMBERS SHALL NOT BE PERMITTED WITHOUT WRITTEN APPROVAL BY THE ENGINEER OF RECORD.
13. EXISTING STRUCTURAL STEEL HAS LEAD PAINT COATING. LEAD ABATEMENT BY LICENSED CONTRACTOR MAY BE REQUIRED WHEN CONNECTING TO OR DISTURBING THE PAINT ON EXISTING BEAMS AND GRATING.

G. ADHESIVE/MECHANICAL ANCHORS

1. WITHOUT WRITTEN APPROVAL OF THE ENGINEER, CONTRACTOR SHALL NOT SUBSTITUTE POST-INSTALLED ANCHORS WHERE CAST-IN-PLACE ANCHORS ARE SPECIFIED IN THE DRAWINGS.
2. WHERE STRUCTURAL DETAILS SPECIFY SPECIFIC BRANDS AND/OR TYPES OF ADHESIVES OR ANCHORS, SUBSTITUTIONS OF OTHER BRANDS AND/OR TYPES IS NOT ALLOWED, WITHOUT WRITTEN APPROVAL OF THE ENGINEER.
3. SUBSTITUTION REQUESTS FOR ALTERNATE PRODUCTS SHALL BE APPROVED IN WRITING BY THE STRUCTURAL ENGINEER OF RECORD PRIOR TO USE. SUBSTITUTION REQUESTS SHALL INCLUDE AN ICC ESR OR IAPMO REPORT AND SUPPORTING CALCULATIONS INDICATING COMPLIANCE WITH DESIGN INTENT.
4. ALL ADHESIVE/MECHANICAL ANCHORS SHALL BE INSTALLED, INCLUDING HOLE DRILLING AND PREPARATION, IN ACCORDANCE WITH AN APPROVED INDEPENDENT EVALUATION REPORT (ICC-ES, IAPMO, OR APPROVED EQUAL), AS INDICATED BELOW, AND IN ACCORDANCE WITH ALL MANUFACTURER'S PRINTED INSTALLATION INSTRUCTIONS (MPII).
5. ADHESIVE ANCHORS SHALL BE INSTALLED IN CONCRETE HAVING A MINIMUM AGE OF 21 DAYS AT TIME OF ANCHOR INSTALLATION. ADHESIVE ANCHORS SHALL NOT BE FULLY LOADED UNTIL CONCRETE HAS REACHED DESIGN STRENGTH.
6. UNLESS APPROVED BY THE ENGINEER OF RECORD, CONCRETE AND DRILLED ANCHOR HOLES SHALL BE DRY AND FREE OF WATER FOR 24 HOURS PRIOR TO ADHESIVE INSTALLATION. CONTACT THE ENGINEER OF RECORD FOR GUIDANCE IF THE CONTRACTOR CHOOSES TO INSTALL IN WET OR DAMP HOLES.
7. CONCRETE TEMPERATURE AT THE TIME OF INSTALLATION SHALL BE MONITORED BY THE CONTRACTOR. CONTRACTOR SHALL COMPLY WITH ALL MANUFACTURER'S PRINTED INSTALLATION INSTRUCTIONS (MPII) RELATIVE TO SUBSTRATE TEMPERATURE.
8. INSTALLATION OF ADHESIVE ANCHORS HORIZONTALLY OR UPWARDLY INCLINED TO SUPPORT SUSTAINED TENSION LOADS SHALL BE PERFORMED BY PERSONNEL CERTIFIED BY AN APPLICABLE CERTIFICATION PROGRAM. CERTIFICATION SHALL INCLUDE WRITTEN AND PERFORMANCE TESTS IN ACCORDANCE WITH THE ACI ADHESIVE INSTALLER CERTIFICATION PROGRAM, OR EQUIVALENT IN ACCORDANCE WITH ACI 318-11 D.9.2.2. PROOF OF CURRENT CERTIFICATION SHALL BE SUBMITTED TO THE ENGINEER FOR APPROVAL PRIOR TO INSTALLATION. CONTINUOUS SPECIAL INSPECTION SHALL BE PROVIDED FOR THESE ANCHORS.
9. UNLESS NOTED OTHERWISE, ALL ADHESIVE ANCHORS INTO CONCRETE SHALL BE:
   a. HILTI HIT-RE 500V3 (ESR-3814), OR HILTI HIT-HY 200-A (ESR-3187).
   b. SIMPSON SET-3G (ESR-4057), OR AT-XP (ER-0263).
   c. DEWALT PURE 110+ (ESR-3298), OR AC200+ GOLD (ESR-4027-COLD WEATHER).
10. UNLESS NOTED OTHER WISE, ALL MECHANICAL ANCHORS INTO CONCRETE SHALL BE:
    a. HILTI KWIK BOLT TZ (ESR-1917).
    b. SIMPSON STRONG-BOLT 2 (ESR-3037).
11. UNLESS NOTED OTHERWISE, ALL SCREW ANCHORS INTO CONCRETE SHALL BE:
    a. SIMPSON TITEN HD (ESR-2713).
    b. DEWALT SCREWBOLT+ (ESR-2526).
    c. HILTI KWIK HUS-EZ (ESR-3027).
12. THE TESTING LABORATORY WILL PERFORM VISUAL INSPECTION OF ANCHORS AND DOWELS AS SPECIFIED IN THE SPECIAL INSPECTION SCHEDULE AND THE APPROVED INDEPENDENT EVALUATION REPORT. TENSION TESTING CAN BE REQUIRED AT THE DIRECTION OF THE STRUCTURAL ENGINEER OF RECORD OR THE SPECIAL INSPECTOR.
13. IF REINFORCEMENT IS ENCOUNTERED DURING DRILLING, ABANDON THAT HOLE AND SHIFT THE ANCHOR LOCATION TO AVOID THE REINFORCEMENT. PROVIDE A MINIMUM SPACE OF (2) ANCHOR HOLE DIAMETERS OR 1 INCH, WHICH EVER IS LARGER, OF SOUND CONCRETE/MASONRY BETWEEN THE ANCHOR AND THE ABANDONED HOLE. FILL THE ABANDONED HOLE WITH NON-SHRINK GROUT. AT CONTRACTORS OPTION, LOCATE EXISTING REINFORCEMENT PRIOR TO DRILLING/CORING. IF THE ANCHOR OR DOWEL CANNOT BE SHIFTED AS NOTED ABOVE, THE ENGINEER WILL DETERMINE A NEW LOCATION.
14. LOCATE REINFORCEMENT AND CONFIRM FINAL ANCHOR LOCATIONS PRIOR TO FABRICATING PLATES, MEMBERS, OR OTHER STEEL ASSEMBLIES ATTACHED WITH MECHANICAL ANCHORS.

I. COLD-FORMED STEEL

1. LIGHT GAUGE STEEL FRAMING
   a. STEEL FRAMING SIZE DESIGNATORS USED IN THE DRAWINGS FOLLOW THE CONVENTION ESTABLISHED BY THE STEEL STUD MANUFACTURERS' ASSOCIATION (SSMA) AND THE NORTH AMERICAN STEEL FRAMING ALLIANCE (NASFA). FRAMING MEMBERS PROVIDED SHALL MEET OR EXCEED ALL SSMA AND NASFA STANDARDS AND DESIGN PROPERTIES.
   b. ALL LOAD BEARING STUDS (AND/OR) JOIST FRAMING MEMBERS ALONG WITH ALL RUNNERS, BRIDGING, AND END-TRACKS SHALL BE OF THE DESIGNATION SHOWN ON THE PLANS. ALL OF THE ABOVE ELEMENTS SHALL BE FORMED FROM STEEL MEETING REQUIREMENTS OF ASTM A1011/A1011M-04. ALL COMPONENTS SHALL BE GALVANIZED. ALL COMPONENTS SHALL HAVE THE FOLLOWING YIELD STRESSES :

COMPONENT	BASE METAL THICKNESS	YIELD STRESS
STUDS, JOISTS & TRACKS	33 & 43 MIL	33,000 PSI
	54, 68 & 97 MILL	50,000 PSI
END CLOSURES & BRIDGING	33, 43, 54 & 68 MILL	33,000 PSI

   c. FOLLOW ALL MANUFACTURERS' RECOMMENDATIONS FOR THE USE OF THESE PRODUCTS.
   d. UNLESS NOTED OTHERWISE, ALL WELDED CONNECTIONS SHALL BE IN ACCORDANCE WITH AWS D1.3 AND THE STRUCTURAL DETAILS. ALL WELDS SHALL BE COMPLETED USING E60XX ELECTRODES.
2. SHEATHING SHALL BE APA RATED SHEATHING, EXPOSURE I, EXTERIOR GLUE, FIRE RETARDANT, AND PANEL INDEX RATING AS NOTED BELOW UNLESS NOTED OTHERWISE :

LOCATION	THICKNESS	PANEL INDEX
WALLS :	15/32"	24/0
ROOFS :	19/32"	32/16

   a. INDIVIDUAL PIECES OF SHEATHING AT ROOF, FLOOR, AND SHEAR WALLS SHALL NOT BE SMALLER THAN 24" IN EITHER DIRECTION AND SHALL SPAN A MINIMUM OF TWO FRAMING SPACES, UNO.
   b. UNLESS NOTED OTHERWISE, ALL WALL SHEATHING AT SHEAR WALLS SHALL HAVE FLAT STUD BLOCKING AT ALL PANEL EDGES. SEE DETAIL 11/S202.
   c. FOR MAXIMUM OPENINGS IN PLYWOOD SEE DETAIL 1/S206.
3. CONNECTIONS, FASTENERS
   a. UNLESS NOTED OTHERWISE, #8 TEK SCREWS SHALL BE USED TO FASTEN ALL PLYWOOD SHEARWALL SHEATHING TO STUDS AND BLOCKING AS FOLLOWS :
      1. PANEL EDGE SCREWS "ES": 6"O.C.
      2. PANEL FIELD SCREWS "FS": 12"O.C. AT INTERIOR SUPPORTS IN FIELD OF PANEL.
      3. THE HEAD OF ALL SCREWS SHALL BE SCREWED FLUSH WITH THE SURFACE OF THE SHEATHING.
   b. ALL SCREWS SHALL CONFORM TO CFSEI TECH NOTE (F701-12) AND SHALL HAVE THE FOLLOWING MINIMUM PROPERTIES :

SCREW SIZE	SHANK DIAMETER	HEAD DIAMETER
NO. 6	0.138"	0.272"
NO. 8	0.164"	0.272"
NO. 10	0.190"	0.340"
NO. 12	0.216"	0.340"

   c. UNLESS NOTED OTHERWISE, ALL FRAMING ANCHORS, CLIPS, HOLD DOWNS, STRAPS, ETC. TO BE PROVIDED BY THE STEEL NETWORK OR APPROVED EQUAL.
   d. UNLESS NOTED OTHERWISE, ALL EXTERIOR WALL BOTTOM TRACKS TO BE ANCHORED TO THE CONCRETE SLAB WITH 3/8" DIAMETER HILTI KWIK HUS-EZ SCREW ANCHORS WITH 2-1/2" EMBEDMENT AT 12"O.C.
4. UNLESS NOTED OTHERWISE, ALL STEEL STUD WALLS SHALL BE CONTINUOUS BETWEEN TOP AND BOTTOM TRACKS WITH NO SPLICES.
5. UNLESS NOTED OTHERWISE, ALL STEEL STUD JOISTS AND BOX HEADER COMPONENTS SHALL BE CONTINUOUS WITH NO SPLICES BETWEEN BEARING SUPPORTS.
6. ALL TOP AND BOTTOM TRACKS OF STUD WALLS AND BOX HEADERS SHALL BE CONTINUOUS. WHERE LONG TRACKS ARE NOT AVAILABLE, TRACKS MAY BE WELDED TOGETHER PER NOTE 1D OF THESE NOTES, ON ALL SIDES OF TRACKS MAY BE SPLICED PER DETAIL 2/S201.
7. SEE TYPICAL DETAILS FOR REINFORCEMENT OF KNOCK OUT HOLES AT BEARING AND POINT LOAD LOCATIONS ON STEEL JOISTS AND BOX HEADERS.
8. UNLESS NOTED OTHERWISE, ALL WALLS SHALL BE 362S162-54 STUDS SPACED AT 16"O.C. WITH 362T125-54 TRACKS. ATTACH TRACK TO STUDS WITH (1) #8 TEK SCREW EACH SIDE OF STUD.

J. EXISTING BUILDING NOTES

1. ARW ENGINEERS EXPRESSLY DISCLAIMS RESPONSIBILITY FOR ANY PORTION OF THE EXISTING BUILDING NOT SPECIFICALLY ADDRESSED IN THESE DRAWINGS.
2. DRAWINGS AND DETAILS HAVE BEEN PREPARED TO REFLECT THE EXISTING CONDITIONS AND CONFIGURATIONS OF STRUCTURAL ELEMENTS. HOWEVER, THE CONTRACTOR IS ULTIMATELY RESPONSIBLE FOR VERIFYING ALL EXISTING CONDITIONS AND ALERTING THE ENGINEER OF ANY DISCREPANCIES FOUND PRIOR TO FABRICATING OR INSTALLING STRUCTURAL ELEMENTS.
3. THE CONTRACTOR IS RESPONSIBLE FOR MAKING SURE THAT THE BUILDING AND ELEMENTS WITHIN THE BUILDING REMAIN STABLE UNTIL CONSTRUCTION IS COMPLETE. AT NO ADDITIONAL COST TO THE OWNER, THE CONTRACTOR SHALL BE RESPONSIBLE FOR PROVIDING SHORING OR OTHER TEMPORARY SUPPORT OF STRUCTURAL MEMBERS UNTIL THE FINAL CONFIGURATION HAS BEEN COMPLETED.

REV	APPROVED DATE	DESCRIPTION	JCN	REDLINE DATE	APVD

DEPARTMENT OF TRANSPORTATION
FEDERAL AVIATION ADMINISTRATION
ATO - TECHNICAL OPERATIONS WESTERN SERVICE AREA

ARTCC
RECONFIGURE M1 ROOM

STRUCTURAL NOTES

PALMDALE LOS ANGELES CTR CA

REGISTERED PROFESSIONAL ENGINEER DAVID C. FIERRO No. S 4219 Exp. 12/31/23 STRUCTURAL STATE OF CALIFORNIA 10-19-2021

CLH ARCHITECTS ENGINEERS
Case, Lowe & Hart, Inc. 2484 Washington Blvd. Suite 510 Ogden, Utah 84401-2346 801.399.5821 www.clhae.com

E-Corp BUILDING A WORLD OF DIFFERENCE

REVIEWED BY	SUBMITTED BY	APPROVED BY
	ART GAPASIN	DARYL KITCHEN
	PROJECT ENGINEER	MGR. ENGINEERING - LA

DESIGNED	A. Bown	ISSUED BY	DATE 08.20.2021 / JCN 1004394
DRAWN	Z. Thorner	ENGINEERING SERVICES ENROUTE/FSS	DRAWING NO ZLA-D-ARTCC- S001 / REV
CHECKED	S. Ericksen		

ROOF DECK SCHEDULE

AREA	DECK			ATTACHMENT						MIN. SHEAR CAPACITY	MAX. FLEXIBILITY FACTOR	COMMENTS
				SUPPORTS		SIDE SEAMS			SUPPORTS PARALLEL TO FLUTES			
	DEPTH	TYPE	GA.	SCREWS	PATTERN	#10 SCREWS	TOP SEAM WELD	PUNCH LOCK(1)	#12 SCREWS			
A	1 1/2	B	20	#12	36/4	24"o.c.	---	---	12"o.c.	261 PLF	100.6	---

FASTENING PATTERNS

SCREW PATTERN : 36/4

NOTES :
1. ALL ROOF DECKING TO BE SUPPLIED BY VERCO, OR APPROVED EQUAL. ALTERNATE DECKING SHALL BE SUBMITTED WITH CURRENT ICC APPROVAL TO ENGINEER FOR REVIEW AND APPROVAL. ALTERNATE DECKING SYSTEMS SHALL MEET OR EXCEED THE MINIMUM SHEAR CAPACITY AND SHALL PROVIDE LESS THAN OR EQUAL TO THE MAXIMUM FLEXIBILITY FACTOR LISTED IN THE SCHEDULE.
2. USE NESTABLE (OVERLAPPING) SIDE SEAMS AT SCREW ATTACHMENTS AND INTERLOCKING SIDE SEAMS AT WELDS.
3. ALL DECK WITH A PROFILE DEPTH OF 2" OR LESS SHALL HAVE NESTED OR TELESCOPED END LAPS.

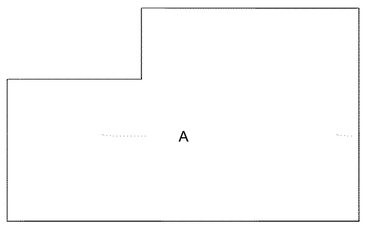

KEY PLAN

SPECIAL INSPECTION SCHEDULE 1, 2

ESTABLISHED PER 2019 CBC SECTION 110 AND CHAPTER 17

ITEM	CONTINUOUS[3]	PERIODIC[3]	REFERENCE	COMMENTS
PRE-FAB CONSTRUCTION (CBC 1704.2)			REFERENCE NOTES P1 & P2	P1. SPECIAL INSPECTION IS NOT REQUIRED WHERE THE WORK IS DONE ON THE PREMISES OF A FABRICATOR REGISTERED AND APPROVED TO PERFORM SUCH WORK WITHOUT SPECIAL INSPECTION, PROVIDED THE FABRICATOR COMPLIES WITH CBC. P2. INSPECTION FOR PREFABRICATED CONSTRUCTION SHALL BE THE SAME AS IF THE MATERIAL USED IN THE CONSTRUCTION TOOK PLACE ON SITE. SPECIAL INSPECTION WILL NOT BE REQUIRED DURING PREFABRICATION IF THE APPROVED AGENCY CERTIFIES THE CONSTRUCTION AND FURNISHES EVIDENCE OF COMPLIANCE. (SEE NOTE 2).
COLD FORMED FRAMING (CBC 1705.11.2 & 1705.12.32)				CF1. SPECIAL INSPECTION IS NOT REQUIRED FOR COLD-FORMED STEEL LIGHT-FRAME SHEAR WALLS, BRACES, DIAPHRAGMS, COLLECTORS (DRAG STRUTS) AND HOLDOWNS WHERE SHEATHING IS WOOD STRUCTURAL PANEL OR STEEL SHEETS ON ONLY ONE SIDE OF THE SHEAR WALL, SHEAR PANEL OR DIAPHRAGM ASSEMBLY AND THE FASTENER SPACING OF THE SHEATHING IS MORE THAN 4"o.c.
LIGHT GAUGE METAL FRAMING WELDING		●		
SHEAR WALL & DIAPHRAGM ATTACHMENTS		●		
DRAG STRUT & BRACE INSTALLATION		●		
HOLDOWN INSTALLATION		●		

GENERAL SPECIAL INSPECTION NOTES :

1. THE ITEMS MARKED WITH A "●" IN THE SPECIAL INSPECTION SCHEDULE SHALL BE INSPECTED IN ACCORDANCE WITH CBC CHAPTER 17 BY A CERTIFIED SPECIAL INSPECTOR FROM AN ESTABLISHED TESTING AGENCY. FOR MATERIAL SAMPLING AND TESTING REQUIREMENTS, REFER TO THE MATERIAL SAMPLING AND TESTING SECTION, THE PROJECT SPECIFICATIONS, AND THE SPECIFIC GENERAL NOTES SECTIONS. THE TESTING AGENCY SHALL SEND COPIES OF ALL STRUCTURAL TESTING AND INSPECTION REPORTS DIRECTLY TO THE ARCHITECT, ENGINEER, CONTRACTOR, AND BUILDING OFFICIAL. ANY ITEMS WHICH FAIL TO COMPLY WITH THE APPROVED CONSTRUCTION DOCUMENTS SHALL IMMEDIATELY BE BROUGHT TO THE ATTENTION OF THE CONTRACTOR FOR CORRECTION. IF DISCREPANCIES ARE NOT CORRECTED, THEY SHALL BE BROUGHT TO THE ATTENTION OF THE BUILDING OFFICIAL, ARCHITECT, AND ENGINEER PRIOR TO COMPLETION OF THAT PHASE OF WORK. SPECIAL INSPECTION TESTING REQUIREMENTS APPLY EQUALLY TO ALL BIDDER DESIGNED COMPONENTS.
2. ANY CONSTRUCTION OR MATERIAL THAT HAS FAILED INSPECTION SHALL BE SUBJECT TO REMOVAL AND REPLACEMENT.
3. CONTINUOUS SPECIAL INSPECTION MEANS THE FULL-TIME OBSERVATION OF WORK REQUIRING SPECIAL INSPECTION BY AN APPROVED SPECIAL INSPECTOR WHO IS PRESENT IN THE AREA WHERE THE WORK IS BEING PERFORMED. PERIODIC SPECIAL INSPECTION MEANS THE PART-TIME OR INTERMITTENT OBSERVATION OF WORK REQUIRING SPECIAL INSPECTION BY AN APPROVED SPECIAL INSPECTOR WHO IS PRESENT IN THE AREA WHERE THE WORK HAS BEEN OR IS BEING PERFORMED AND AT THE COMPLETION OF THE WORK. (CBC SECTION 202)

BEAM CONNECTION SCHEDULE

BEAM DEPTH	SHEAR PLATE INFORMATION			BOLTS W/ STANDARD WASHERS OVER SLOTS		WELD 'A'	COMMENTS
	PL. DIMENSIONS W/ SHORT-SLOTTED HOLES	Lev	Leh	No.	SIZE		
W8	PL. 1/4" x 4"	1 1/2"	2"	2	3/4" Ø	3/16"	
W14, W16	PL. 5/16" x 4"	1 1/2"	2"	3	3/4" Ø	1/4"	

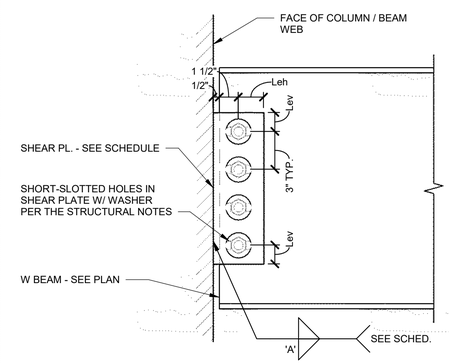

LEGEND OF SYMBOLS AND ABBREVIATIONS

AB	=	ANCHOR BOLT
ABV	=	ABOVE
ARCH	=	ARCHITECT
BLW	=	BELOW
BN	=	BOUNDARY NAILING
CL	=	CENTERLINE
COL	=	COLUMN
CONC	=	CONCRETE
DIA / Ø	=	DIAMETER
DBE	=	DECK BEARING ELEVATION
ELEV	=	ELEVATION
EN	=	EDGE NAILING
EOD	=	EDGE OF DECK
FFE	=	FINISHED FLOOR ELEVATION
HSA	=	HEADED STUD ANCHOR
JBE	=	JOIST BEARING ELEVATION
MAX	=	MAXIMUM
MECH	=	MECHANICAL
MEZZ	=	MEZZANINE
MIN	=	MINIMUM
OAE	=	OR APPROVED EQUAL
OPP	=	OPPOSITE
PAF	=	POWDER ACTUATED FASTENER
PL	=	PLATE
REINF	=	REINFORCING
REQ'D	=	REQUIRED
SIM	=	SIMILAR
SSH	=	STEEL STUD HEADER
SSJ	=	STEEL STUD JAMB
SSS	=	STEEL STUD SILL
SSW	=	STEEL STUD WALL
TOB	=	TOP OF BEAM ELEVATION
TOG	=	TOP OF GIRDER ELEVATION
TOS	=	TOP OF STEEL ELEVATION
TYP	=	TYPICAL
UNO	=	UNLESS NOTED OTHERWISE

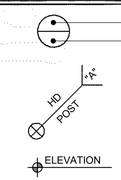

HD - SIMPSON HOLDOWN SIZE POST - SIZE OF END POST CONNECTED TO HOLDOWN "A" - PLAN CONFIGURATION AT HOLDOWN AT FOUNDATION

REV	APPROVED DATE	DESCRIPTION	JCN	REDLINE DATE	APVD

DEPARTMENT OF TRANSPORTATION
FEDERAL AVIATION ADMINISTRATION
ATO - TECHNICAL OPERATIONS — WESTERN SERVICE AREA

ARTCC
RECONFIGURE M1 ROOM

SCHEDULES

PALMDALE — LOS ANGELES CTR — CA

REGISTERED PROFESSIONAL ENGINEER DAVID L. PIERRE No. S 4219 Exp. 12/31/23 STRUCTURAL STATE OF CALIFORNIA
11-19-2021

CLH ARCHITECTS ENGINEERS
Case, Lowe & Hart, Inc. 2484 Washington Blvd. Suite 510 Ogden, Utah 84401-2346 801.399.5821 www.clhae.com

E-Corp
BUILDING A WORLD OF DIFFERENCE

REVIEWED BY	SUBMITTED BY	APPROVED BY
	ART GAPASIN	DARYL KITCHEN
	PROJECT ENGINEER	MGR. ENGINEERING - LA

DESIGNED	A. Bown	ISSUED BY	ENGINEERING SERVICES ENROUTE/FSS
DRAWN	Z. Thorner	DATE	08.20.2021
CHECKED	S. Ericksen	JCN	1004394
DRAWING NO	ZLA-D-ARTCC- S002	REV	

STRUCTURAL STEEL SPECIAL INSPECTION SCHEDULE

ESTABLISHED PER 2019 CBC SECTION 1705.2.1

INSPECTION TASKS PRIOR TO WELDING (TABLE N5.4-1)	FABRICATOR QUALITY CONTROL		SPECIAL INSPECTOR QUALITY ASSURANCE	
	CONTINUOUS	PERIODIC	CONTINUOUS	PERIODIC
WELDER QUALIFICATION RECORDS AND CONTINUITY RECORDS	●			●
WELDING PROCEDURE SPECIFICATIONS (WPSs) AVAILABLE	●		●	
MANUFACTURER CERTIFICATIONS FOR WELDING CONSUMABLES AVAILABLE	●		●	
MATERIAL IDENTIFICATION (TYPE / GRADE)		●		●
WELDER IDENTIFICATION SYSTEM[1]		●		●
FIT-UP OF GROOVE WELDS (INCLUDING JOINT GEOMETRY)				
* JOINT PREPARATION				
* DIMENSIONS (ALIGNMENT, ROOT OPENING, ROOT FACE, BEVEL)				
* CLEANLINESS (CONDITION OF STEEL SURFACES)		●		●
* TACKING (TACK WELD QUALITY AND LOCATION)				
* BACKING TYPE AND FIT (IF APPLICABLE)				
FIT-UP OF CJP GROOVE WELDS OFHSS T-, Y-, AND K-JOINTS WITHOUT BACKING (INCLUDING JOINT GEOMETRY)				
* JOINT PREPARATIONS				
* DIMENSIONS (ALIGNMENT, ROOT OPENING, ROOT FACE, BEVEL)	●			●
* CLEANLINESS (CONDITION OF STEEL SURFACES)				
* TACKING (TACK WELD QUALITY AND LOCATION)				
CONFIGURATION AND FINISH OF ACCESS HOLES		●		●
FIT-UP OF FILLET WELDS				
* DIMENSIONS (ALIGNMENT, GAPS AT ROOT)		●		●
* CLEANLINESS (CONDITION OF STEEL SURFACES)				
* TACKING (TACK WELD QUALITY AND LOCATION)				
CHECK WELDING EQUIPMENT		●		

[1]THE FABRICATOR OR ERECTOR, AS APPLICABLE, SHALL MAINTAIN A SYSTEM BY WHICH A WELDER WHO HAS WELDED A JOINT OR MEMBER CAN BE IDENTIFIED. STAMPS, IF USED, SHALL BE THE LOW-STRESS TYPE.

INSPECTION TASKS DURING WELDING (TABLE N5.4-2)	CONTINUOUS	PERIODIC	CONTINUOUS	PERIODIC
CONTROL AND HANDLING OF WELDING CONSUMABLES				
* PACKAGING		●		●
* EXPOSURE CONTROL				
NO WELDING OVER CRACKED TACK WELDS		●		●
ENVIRONMENTAL CONDITIONS				
* WIND SPEED WITHIN LIMITS		●		●
* PRECIPITATION AND TEMPERATURE				
WPS FOLLOWED				
* SETTINGS ON WELDING EQUIPMENT				
* TRAVEL SPEED				
* SELECTED WELDING MATERIALS		●		●
* SHIELDING GAS TYPE / FLOW RATE				
* PREHEAT APPLIED				
* INTERPASS TEMPERATURE MAINTAINED (MIN. / MAX)				
* PROPER POSITION (F, V, H, OH)				
WELDING TECHNIQUES				
* INTERPASS AND FINAL CLEANING				
* EACH PASS WITHIN PROFILE LIMITATIONS		●		●
* EACH PASS MEETS QUALITY REQUIREMENTS				
PLACEMENT AND INSTALLATION OF STEEL HEADED STUD ANCHORS	●		●	

INSPECTION TASKS AFTER WELDING (TABLE N5.4-3)	CONTINUOUS	PERIODIC	CONTINUOUS	PERIODIC
WELDS CLEANED		●		●
SIZE, LENGTH AND LOCATION OF WELDS	●		●	
WELDS MEET VISUAL ACCEPTANCE CRITERIA				
* CRACK PROHIBITION				
* WELD / BASE-METAL FUSION				
* CRATER CROSS SECTION				
* WELD PROFILES	●		●	
* WELD SIZE				
* UNDERCUT				
* POROSITY				
ARC STRIKES	●		●	
K-AREA[1]	●		●	
WELD ACCESS HOLES IN ROLLED HEAVY SHAPES AND BUILT-UP HEAVY SHAPES[2]	●		●	
BACKING REMOVED AND WELD TABS REMOVED (IF REQUIRED)	●		●	
REPAIR ACTIVITIES	●		●	
DOCUMENT ACCEPTANCE OR REJECTION OF WELDED JOINT OR MEMBER	●		●	
NO PROHIBITED WELDS HAVE BEEN ADDED WITHOUT THE APPROVAL OF THE EOR		●		●

[1]WHEN WELDING OF DOUBLER PLATES, CONTINUITY PLATES OR STIFFENERS HAS BEEN PERFORMED IN THE K-AREA, VISUALLY INSPECT THE WEB K-AREA FOR CRACKS WITHIN 3 IN. (75mm) OF THE WELD)
[2]AFTER ROLLED HEAVY SHAPES (SEE SECTION A3.1c) AND BUILT-UP HEAVY SHAPES (SEE SECTION A3.1d) ARE WELDED, VISUALLY INSPECT THE WELD ACCESS HOLE FOR CRACKS.

NOTES

1. PERIODIC - OBSERVE THESE ITEMS ON A RANDOM BASIS. OPERATIONS NEED NOT BE DELAYED PENDING THESE INSPECTIONS.
2. CONTINUOUS - PERFORM THESE TASKS FOR EACH WELDED JOINT OR MEMBER.
3. QUALITY CONTROL (QC) SHALL BE PROVIDED BY THE FABRICATOR AND ERECTOR.
4. QUALITY ASSURANCE (QA) SHALL BE PROVIDED BY OTHERS WHEN REQUIRED BY THE AUTHORITY HAVING JURISDICTION (AHJ), APPLICABLE BUILDING CODE (ABC), PURCHASER, OWNER, OR ENGINEER OF RECORD (EOR). NONDESTRUCTIVE TESTING (NDT) SHALL BE PERFORMED BY THE AGENCY OR FIRM RESPONSIBLE FOR QUALITY ASSURANCE, EXCEPT AS PERMITTED IN ACCORDANCE WITH SECTION N8.
5. QC AND QA INSPECTORS SHALL BE QUALIFIED IN ACCORDANCE WITH AISC 360-16 CHAPTER N4.
6. NONDESTRUCTIVE TESTING PERSONNEL SHALL BE QUALIFIED IN ACCORDANCE WITH AISC 360-16 CHAPTER N4.3.
7. NONDESTRUCTIVE TESTING OF WELDED JOINTS SHALL COMPLY WITH AISC 360-16 CHAPTER N5.5a AND b.
8. OBSERVATION OF WELDING OPERATIONS AND VISUAL INSPECTION OF IN-PROCESS AND COMPLETED WELDS SHALL BE THE PRIMARY METHOD TO CONFIRM THAT THE MATERIALS, PROCEDURES AND WORKMANSHIP ARE IN CONFORMANCE WITH THE CONSTRUCTION DOCUMENTS. FOR STRUCTURAL STEEL, ALL PROVISIONS OF AWS D1.1 / D1.1M STRUCTURAL WELDING CODE - STEEL FOR STATICALLY LOADED STRUCTURES SHALL APPLY.
9. THERMALLY CUT SURFACES OF ACCESS HOLES SHALL BE TESTED BY QA USING MT OR PT, WHEN THE FLANGE THICKNESS EXCEEDS 2 IN. (50mm) FOR ROLLED SHAPES, OR WHEN THE WEB THICKNESS EXCEEDS 2 IN. (50mm) FOR BUILT-UP SHAPES. ANY CRACK SHALL BE DEEMED UNACCEPTABLE REGARDLESS OF SIZE OR LOCATION.
10. WHEN REQUIRED BY APPENDIX 3, TABLE A-3.1, WELDED JOINTS REQUIRING WELD SOUNDNESS TO BE ESTABLISHED BY RADIOGRAPHICS OR ULTRASONIC INSPECTION SHALL BE TESTED BY QA AS PRESCRIBED. REDUCTION IN THE RATE OF UT IS PROHIBITED.
11. REDUCTION OF RATE OF ULTRASONIC TESTING - THE RATE OF UT IS ONLY PERMITTED TO BE REDUCED IF APPROVED BY THE EOR AND THE AHJ PER AISC 360-16 CHAPTER N5.5e.
12. FOR STRUCTURES IN RISK CATEGORY II, WHERE THE INITIAL RATE FOR UT IS 10%, THE NDT RATE FOR AN INDIVIDUAL WELDER OR WELDING OPERATOR SHALL BE INCREASED TO 100% SHOULD THE REJECT RATE, THE NUMBER OF WELDS CONTAINING UNACCEPTABLE DEFECTS DIVIDED BY THE NUMBER OF WELDS COMPLETED, EXCEEDS 5% OF THE WELDS TESTED FOR THE WELDER OR WELDING OPERATOR. A SAMPLING OF AT LEAST 20 COMPLETED WELDS FOR A JOB SHALL BE MADE PRIOR TO IMPLEMENTING SUCH AN INCREASE. WHEN THE REJECT RATE FOR THE WELDER OR WELDING OPERATOR, AFTER A SAMPLING OF AT LEAST 40 COMPLETED WELDS, HAS FALLEN TO 5% OR LESS, THE RATE OF UT SHALL BE RETURNED TO 10%. FOR EVALUATING THE REJECT RATE OF CONTINUOUS WELDS OVER 3 FT (1M) IN LENGTH WHERE THE EFFECTIVE THROAT IS 1 IN. (25mm) OR LESS, EACH 12 IN. (300mm) INCREMENT OR FRACTION THEREOF SHALL BE CONSIDERED AS ONE WELD. FOR EVALUATING THE REJECT RATE ON CONTINUOUS WELDS OVER 3 FT (1M) IN LENGTH WHERE THE EFFECTIVE THROAT IS GREATER THAN 1 IN. (25mm), EACH 6 IN. (150mm) OF LENGTH OR FRACTION THEREOF SHALL BE CONSIDERED ON WELD.
13. ALL NDT PERFORMED SHALL BE DOCUMENTED. FOR SHOP FABRICATION, THE NDT REPORT SHALL IDENTIFY THE TESTED WELD BY PIECE MARK AND LOCATION IN THE PIECE. FOR FIELD WORK, THE NDT REPORT SHALL IDENTIFY THE TESTED WELD BY LOCATION IN THE STRUCTURE, PIECE MARK, AND LOCATION IN THE PIECE. WHEN A WELD IS REJECTED ON THE BASIS OF NDT, THE NDT RECORD SHALL INDICATE THE LOCATION OF THE DEFECT AND THE BASIS OF REJECTION
14. DEMAND CRITICAL WELDS SHALL MEET THE PROVISION FOUND IN AISC 341-16 AND WELDING METHODS, PROCEDURES AND QUALITY CONTROL SHALL COMPLY WITH AWS D1.1 AND THE FOLLOWING:
    a. ARC STRIKES, GOUGES AND OTHER IMPERFECTIONS WITHIN OR ADJACENT TO THE JOINT, SHALL BE REPAIRED OR REMOVED.
    b. PREHEAT AND INTER-PASS REQUIREMENTS AS OUTLINED IN SECTION 3.5.
    c. UNREPAIRED CRACKS, GOUGES, AND NOTCHES WILL NOT BE PERMITTED IN THE JOINT AREA.
    d. USE ELECTRODES WITH CHARPY V-NOTCH ABSORBED ENERGY EQUAL TO OR GREATER THAN 20 FT-LBS AT 20 DEGREES FAHRENHEIT UNDER AWS A5 CLASSIFICATION TEST METHODS, AND 40 FT-LBS AT 70 DEGREES FAHRENHEIT USING TEST PROCEDURES PRESCRIBED IN APPENDIX X OF AISC 358. ACCEPTABLE ELECTRODES INCLUDE E70TG-K2, E71 T-1.

INSPECTION TASKS PRIOR TO BOLTING (TABLE N5.6-1)	CONTINUOUS	PERIODIC	CONTINUOUS	PERIODIC
MANUFACTURER'S CERTIFICATIONS AVAILABLE FOR FASTENER MATERIALS		●	●	
FASTENERS MARKED IN ACCORDANCE WITH ASTM REQUIREMENTS		●		●
PROPER FASTENERS SELECTED FOR THE JOINT DETAIL (GRADE, TYPE, BOLT LENGTH IF THREADS ARE TO BE EXCLUDED FROM SHEAR PLANE)		●		●
PROPER BOLTING PROCEDURES SELECTED FOR JOINT DETAIL		●		●
CONNECTING ELEMENTS, INCLUDING THE APPROPRIATE FAYING SURFACE CONDITION AND HOLE PREPARATION, IF SPECIFIED, MEET APPLICABLE REQUIREMENTS		●		●
PRE-INSTALLATION VERIFICATION TESTING BY INSTALLATION PERSONNEL OBSERVED AND DOCUMENTED FOR FASTENER ASSEMBLIES AND METHODS USED	●			●
PROPER STORAGE PROVIDED FOR BOLTS, NUTS, WASHERS AND OTHER FASTENER COMPONENTS		●		●

INSPECTION TASKS DURING BOLTING (TABLE N5.6-2)	CONTINUOUS	PERIODIC	CONTINUOUS	PERIODIC
FASTENER ASSEMBLIES, PLACED IN ALL HOLES AND WASHERS (IF REQUIRED) ARE POSITIONED AS REQUIRED		●		●
JOINT BROUGHT TO THE SNUG-TIGHT CONDITION PRIOR TO THE PRETENSIONING OPERATION		●		●
FASTENER COMPONENT NOT TURNED BY THE WRENCH PREVENTED FROM ROTATING		●		●
FASTENERS ARE PRETENSIONED IN ACCORDANCE WITH THE RCSC SPECIFICATION, PROGRESSING SYSTEMATICALLY FROM THE MOST RIGID POINT TOWARD THE FREE EDGES		●		●

INSPECTION TASKS AFTER BOLTING (TABLE N5.6-3)	CONTINUOUS	PERIODIC	CONTINUOUS	PERIODIC
DOCUMENT ACCEPTANCE OR REJECTION OF BOLTED CONNECTIONS	●		●	

NOTES

1. PERIODIC - OBSERVE THESE ITEMS ON A RANDOM BASIS. OPERATIONS NEED NOT BE DELAYED PENDING THESE INSPECTIONS.
2. CONTINUOUS - PERFORM THESE TASKS FOR EACH BOLTED CONNECTION.
3. QUALITY CONTROL (QC) SHALL BE PROVIDED BY THE FABRICATOR AND ERECTOR.
4. QUALITY ASSURANCE (QA) SHALL BE PROVIDED BY OTHERS WHEN REQUIRED BY THE AUTHORITY HAVING JURISDICTION (AHJ), APPLICABLE BUILDING CODE (ABC), PURCHASER, OWNER, OR ENGINEER OF RECORD (EOR). NONDESTRUCTIVE TESTING (NDT) SHALL BE PERFORMED BY THE AGENCY OR FIRM RESPONSIBLE FOR QUALITY ASSURANCE, EXCEPT AS PERMITTED IN ACCORDANCE WITH SECTION N7.
5. FOR SNUG-TIGHT JOINTS, PRE-INSTALLATION VERIFICATION TESTING AS SPECIFIED IN TABLE N5.6-1 AND MONITORING OF THE INSTALLATION PROCEDURES AS SPECIFIED IN TABLE N5.6-2 ARE NOT APPLICABLE. THE QCI AND QAI NEED NOT BE PRESENT DURING THE INSTALLATION OF FASTENERS IN SNUG-TIGHT JOINTS.
6. FOR PRETENSIONED JOINTS AND SLIP-CRITICAL JOINTS, WHEN THE INSTALLER IS USING THE TURN-OF-NUT METHOD WITH MATCHMARKING TECHNIQUES, THE DIRECT-TENSION-INDICATOR METHOD, OR THE TWIST-OFF-TYPE TENSION CONTROL BOLT METHOD, MONITORING OF BOLT PRETENSIONING PROCEDURES SHALL BE AS SPECIFIED IN TABLE N5.6-2. THE QCI AND QAI NEED NOT BE PRESENT DURING THE INSTALLATION OF FASTENERS WHEN THESE METHODS ARE USED BY THE INSTALLER.
7. FOR PRETENSIONED JOINTS AND SLIP-CRITICAL JOINTS, WHEN THE INSTALLER IS USING THE CALIBRATED WRENCH METHOD OR THE TURN-OF-NUT METHOD WITHOUT MATCHMARKING, MONITORING OF BOLT PRETENSIONING PROCEDURES SHALL BE AS SPECIFIED IN TABLE N5.6-2. THE QCI AND QAI SHALL BE ENGAGED IN THEIR ASSIGNED INSPECTION DUTIES DURING INSTALLATION OF FASTENERS WHEN THESE METHODS ARE USED BY THE INSTALLER.
8. OBSERVATION OF BOLTING OPERATIONS SHALL BE THE PRIMARY METHOD USED TO CONFIRM THAT THE MATERIALS, PROCEDURES AND WORKMANSHIP INCORPORATED IN CONSTRUCTION ARE IN CONFORMANCE WITH THE CONSTRUCTION DOCUMENTS AND THE PROVISIONS OF THE RCSC SPECIFICATION.

GENERAL STEEL SPECIAL INSPECTION NOTES :

1. QUALITY ASSURANCE (QA) INSPECTION OF FABRICATED ITEMS SHALL BE MADE AT THE FABRICATOR'S PLANT. THE QUALITY ASSURANCE INSPECTOR (QAI) SHALL SCHEDULE THIS WORK TO MINIMIZE INTERRUPTION TO THE WORK OF THE FABRICATOR.
2. QA INSPECTION OF THE ERECTED STEEL SYSTEM SHALL BE MADE AT THE PROJECT SITE. THE QAI SHALL SCHEDULE THIS WORK TO MINIMIZE INTERRUPTION TO THE WORK OF THE ERECTOR.
3. WHERE A TASK IS NOTED TO BE PERFORMED BY BOTH QC AND QA, IT IS PERMITTED TO COORDINATE THE INSPECTION FUNCTION BETWEEN THE QCI AND QAI SO THAT THE INSPECTION FUNCTIONS ARE PERFORMED BY ONLY ONE PARTY. WHERE QA RELIES UPON INSPECTION FUNCTIONS PERFORMED BY QC, THE APPROVAL OF THE ENGINEER OF RECORD AND THE AUTHORITY HAVING JURISDICTION IS REQUIRED.
4. THE FABRICATOR'S QCI SHALL INSPECT THE FABRICATED STEEL TO VERIFY COMPLIANCE WITH THE DETAILS SHOWN ON THE SHOP DRAWINGS, SUCH AS PROPER APPLICATION OF JOINT DETAILS AT EACH CONNECTION. THE ERECTOR'S QCI SHALL INSPECT THE ERECTED STEEL FRAME TO VERIFY COMPLIANCE WITH THE DETAILS SHOWN ON THE ERECTION DRAWINGS, SUCH AS BRACES, STIFFENERS, MEMBER LOCATIONS AND PROPER APPLICATION OF JOINT DETAILS AT EACH CONNECTION.
5. THE QAI SHALL BE ON THE PREMISES FOR INSPECTION DURING THE PLACEMENT OF ANCHOR RODS AND OTHER EMBEDMENTS SUPPORTING STRUCTURAL STEEL FOR COMPLIANCE WITH THE CONSTRUCTION DOCUMENTS. AS A MINIMUM, THE DIAMETER, GRADE, TYPE AND LENGTH OF THE ANCHOR ROD OR EMBEDDED ITEM, AND THE EXTENT OR DEPTH OF EMBEDMENT INTO THE CONCRETE, SHALL BE VERIFIED PRIOR TO PLACEMENT OF THE CONCRETE.
6. THE QAI SHALL INSPECT THE FABRICATED STEEL OR ERECTED STEEL FRAME, AS APPROPRIATE, TO VERIFY COMPLIANCE WITH THE DETAILS SHOWN ON THE CONSTRUCTION DOCUMENTS, SUCH AS BRACES, STIFFENERS, MEMBER LOCATIONS AND PROPER APPLICATION OF JOINT DETAILS AT EACH CONNECTION.
7. QUALITY ASSURANCE (QA) INSPECTIONS, EXCEPT NONDESTRUCTIVE TESTING (NDT), MAY BE WAIVED WHEN THE WORK IS PERFORMED IN A FABRICATING SHOP OR BY AN ERECTOR APPROVED BY THE AUTHORITY HAVING JURISDICTION (AHJ) TO PERFORM THE WORK WITHOUT QA. NDT OF WELDS COMPLETED IN AN APPROVED FABRICATOR'S SHOP MAY BE PERFORMED BY THAT FABRICATOR WHEN APPROVED BY THE AHJ. WHEN THE FABRICATOR PERFORMS THE NDT, THE QA AGENCY SHALL REVIEW THE FABRICATOR'S NDT REPORTS.
8. AT COMPLETION OF FABRICATION, THE APPROVED FABRICATOR SHALL SUBMIT A CERTIFICATE OF COMPLIANCE TO THE AHJ STATING THAT THE MATERIALS SUPPLIED AND WORK PERFORMED BY THE FABRICATOR ARE IN ACCORDANCE WITH THE CONSTRUCTION DOCUMENTS. AT COMPLETION OF ERECTION, THE APPROVED ERECTOR SHALL SUBMIT A CERTIFICATE OF COMPLIANCE TO THE AHJ STATING THAT THE MATERIALS SUPPLIED AND WORK PERFORMED BY THE ERECTOR ARE IN ACCORDANCE WITH THE CONSTRUCTION DOCUMENTS.
9. IDENTIFICATION AND REJECTION OF MATERIAL OR WORKMANSHIP THAT IS NOT IN CONFORMANCE WITH THE CONSTRUCTION DOCUMENTS, SHALL BE PERMITTED AT ANY TIME DURING THE PROGRESS OF THE WORK. HOWEVER, THIS PROVISION SHALL NOT RELIEVE THE OWNER OR THE INSPECTOR OF THE OBLIGATION FOR TIMELY, IN-SEQUENCE INSPECTIONS. NONCONFORMING MATERIAL AND WORKMANSHIP SHALL BE BROUGHT TO THE IMMEDIATE ATTENTION OF THE FABRICATOR OR ERECTOR, AS APPLICABLE.
10. NONCONFORMING MATERIAL OR WORKMANSHIP SHALL BE BROUGHT INTO CONFORMANCE, OR MADE SUITABLE FOR ITS INTENDED PURPOSE AS DETERMINED BY THE ENGINEER OF RECORD.
11. CONCURRENT WITH THE SUBMITTAL OF SUCH REPORTS TO THE AHJ, EOR OR OWNER, THE QA AGENCY SHALL SUBMIT TO THE FABRICATOR AND ERECTOR:
    (1) NONCONFORMANCE REPORTS
    (2) REPORTS OF REPAIR, REPLACEMENT OR ACCEPTANCE OF NONCONFORMING ITEMS.

REGISTERED PROFESSIONAL ENGINEER — DAVID L. PIERCE — No. S 4219 — Exp. 12-31-2021 — STRUCTURAL — STATE OF CALIFORNIA — 11-19-2021

CLH ARCHITECTS ENGINEERS
Case, Lowe & Hart, Inc. 2484 Washington Blvd. Suite 510 Ogden, Utah 84401-2346 801.399.5821 www.clhac.com

E-Corp BUILDING A WORLD OF DIFFERENCE

REV	APPROVED DATE	DESCRIPTION	JCN	REDLINE DATE	APVD

DEPARTMENT OF TRANSPORTATION
FEDERAL AVIATION ADMINISTRATION
ATO - TECHNICAL OPERATIONS — WESTERN SERVICE AREA

ARTCC
RECONFIGURE M1 ROOM

SCHEDULES

PALMDALE — LOS ANGELES CTR — CA

REVIEWED BY	SUBMITTED BY	APPROVED BY
	ART GAPASIN	DARYL KITCHEN
	PROJECT ENGINEER	MGR. ENGINEERING - LA

DESIGNED A. Bown	ISSUED BY ENGINEERING SERVICES ENROUTE/FSS	DATE 08.20.2021	JCN 1004394
DRAWN Z. Thorner		DRAWING NO ZLA-D-ARTCC- S003	REV
CHECKED S. Ericksen			

X:\DRAWINGS 2019\19521 - FAA En Route Engineering Center\S-19521 - FAA En Route Engineering Center - v.20.rvt
11/29/2021 10:55:33 AM

NOTE: SEE SHEET S102 FOR FRAMING NOTES

SHEAR WALLS - SEE STRUCTURAL NOTES FOR PLYWOOD SHEATHING AND FASTENING REQUIRED AT SHEARWALLS

⊗ SIMPSON HOLDOWN - SEE DETAIL 3/S204

⊗ ⊗ DOUBLE SIMPSON HOLDOWN - SEE DETAIL 4/S204

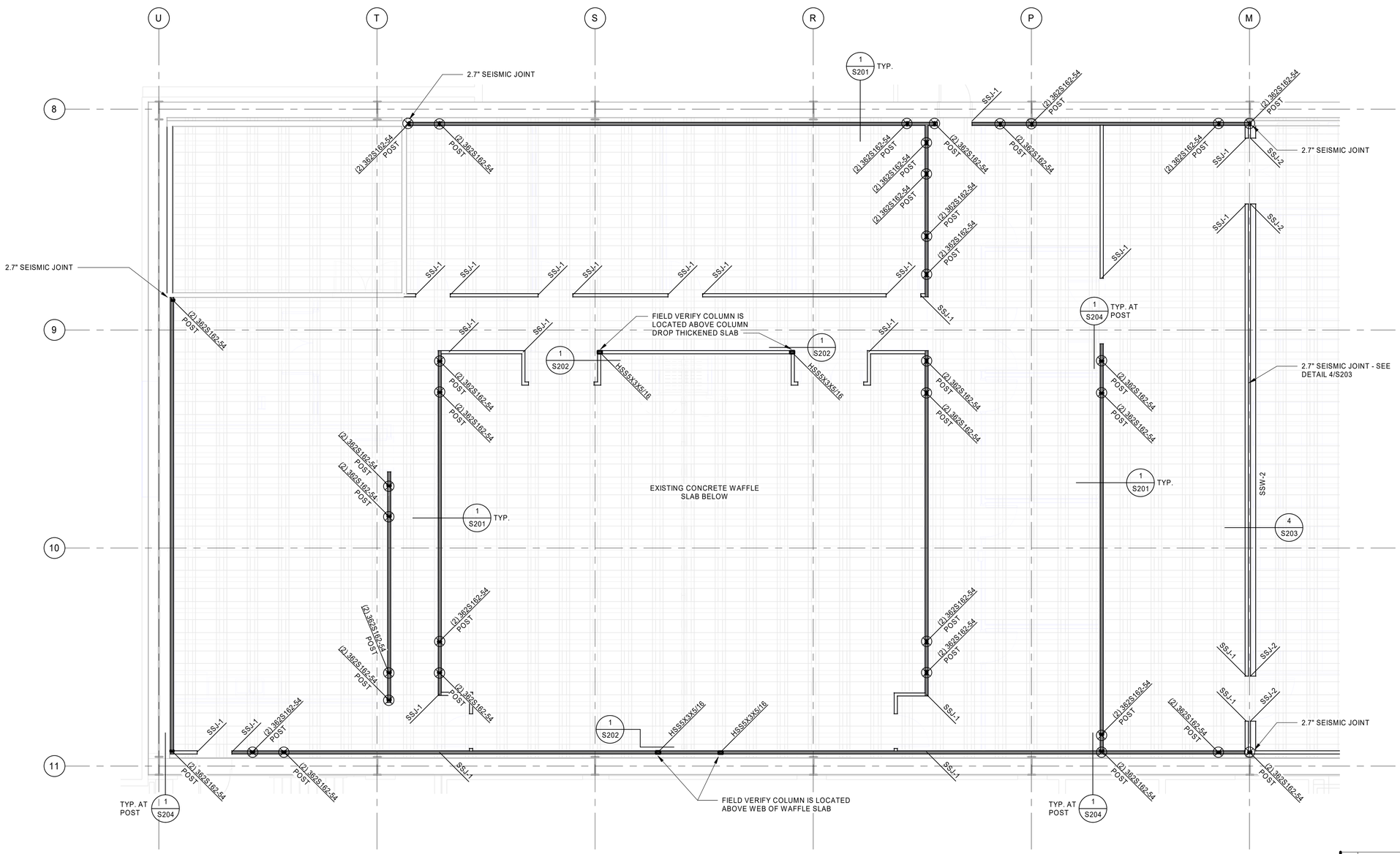

Level 1

SCALE : 3/16" = 1'-0"

A S101

REV	APPROVED DATE	DESCRIPTION	JCN	REDLINE DATE	APVD

DEPARTMENT OF TRANSPORTATION
FEDERAL AVIATION ADMINISTRATION
ATO - TECHNICAL OPERATIONS — WESTERN SERVICE AREA

ARTCC
RECONFIGURE M1 ROOM

FOOTING AND FOUNDATION PLAN

PALMDALE — LOS ANGELES CTR — CA

REGISTERED PROFESSIONAL ENGINEER PAUL C. PIERCE No. S 4219 Exp. 12/31/23 STRUCTURAL STATE OF CALIFORNIA 11-19-2021

CLH ARCHITECTS ENGINEERS
Case, Lowe & Hart, Inc. 2484 Washington Blvd. Suite 510 Ogden, Utah 84401-2346 801.399.5821 www.clhae.com

E-Corp BUILDING A WORLD OF DIFFERENCE

REVIEWED BY	SUBMITTED BY	APPROVED BY
	ART GAPASIN	DARYL KITCHEN
	PROJECT ENGINEER	MGR. ENGINEERING - LA

DESIGNED A. Bown	ISSUED BY ENGINEERING SERVICES ENROUTE/FSS	DATE 08.20.2021	JCN 1004394
DRAWN Z. Thorner		DRAWING NO ZLA-D-ARTCC- S101	REV
CHECKED S. Ericksen			

X:\DRAWINGS 2019\19521 - FAA En Route Engineering Center/S-19521 - FAA En Route Engineering Center - v.20.rvt

2/10/2022 10:02:14 AM

FRAMING NOTES :

1. SSH-1 (STEEL STUD HEADER). AT 3 5/8" WALL, USE (2) 600S162-68 VERTICAL WITH (2) 362T125-68, TOP AND BOTTOM. AT 6" WALL, USE (2) 600S162-68 VERTICAL WITH (2) 600T125-68, TOP AND BOTTOM. SEE DETAILS 6/S201, 5/S205, 6/S205, AND 7/S205, FOR DIFFERENT CONDITIONS.
2. SSW-1 (STEEL STUD WALL) = 362S162-54 AT 16"o.c., ALL WALLS SHALL BE SSW-1 UNLESS NOTED OTHERWISE. SSW-2 (STEEL STUD WALL) = 600S162-554 AT 16"o.c. BRIDGING IS REQUIRED AT 4'-0"o.c. AT ALL WALLS EXCEPT WHERE WALL IS SHEATHED ON BOTH SIDES WITH SHEATHING AND OR GYP BOARD. SEE DETAIL 3/S201.
3. SSJ-1 (STEEL STUD JAMB) = (2) 362S162-54, SEE DETAIL 7/S203 AND 1/S204. SEE DETAIL 2/S205 FOR TOP OF JAMB CONNECTION. SSJ-2 (STEEL STUD JAMB) = (2) 600S162-54.
4. SEE DETAIL 2/S204 FOR REQUIRED DETAILING AT SMALL PENETRATIONS IN DECK.
5. — — WIRE ROPE LOCATIONS. SEE DETAIL 6/S203 AND 8/S205.
6. SEE ARCHITECTURAL DRAWINGS A502 AND A503 FOR ADDITIONAL STRUCTURAL WORK AND INFORMATION.
7. — — BLOCKING. SEE DETAIL 10/S202.
8. – – – – – SIMPSON STRAP

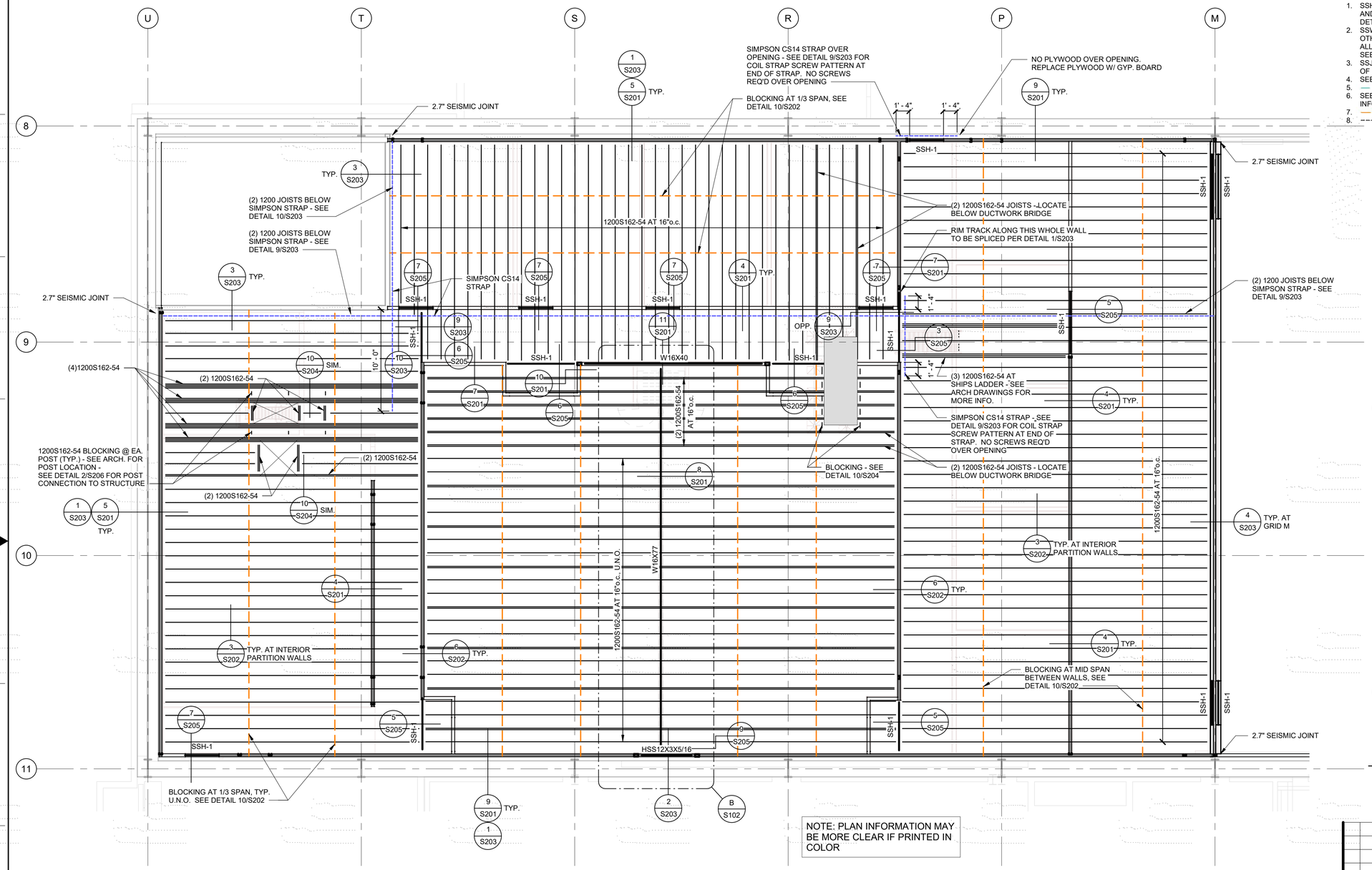

NOTE: PLAN INFORMATION MAY BE MORE CLEAR IF PRINTED IN COLOR

MEZZANINE PLAN

SCALE : 3/16" = 1'-0"

A S102

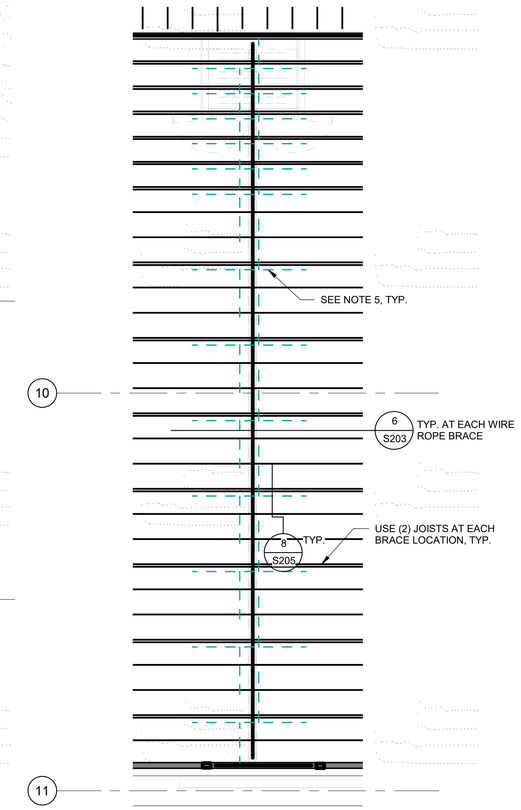

WIRE LAYOUT PLAN

SCALE : 1/4" = 1'-0"

B S102

REV	APPROVED DATE	DESCRIPTION	JCN	REDLINE DATE	APVD

DEPARTMENT OF TRANSPORTATION
FEDERAL AVIATION ADMINISTRATION
ATO - TECHNICAL OPERATIONS — WESTERN SERVICE AREA

ARTCC RECONFIGURE M1 ROOM

MEZZANINE FRAMING PLAN

PALMDALE — LOS ANGELES CTR — CA

REGISTERED PROFESSIONAL ENGINEER CHRIS L. PIERCE No. S 4219 Exp. 12-31-21 STRUCTURAL STATE OF CALIFORNIA 11-19-2021

CLH ARCHITECTS ENGINEERS
Case, Lowe & Hart, Inc. 2484 Washington Blvd. Suite 510 Ogden, Utah 84401-2346 801.399.5821 www.clhac.com

E-Corp BUILDING A WORLD OF DIFFERENCE

REVIEWED BY	SUBMITTED BY	APPROVED BY
	ART GAPASIN	DARYL KITCHEN
	PROJECT ENGINEER	MGR. ENGINEERING - LA

DESIGNED	A. Bown	ISSUED BY	DATE 08.20.2021	JCN 1004394
DRAWN	Z. Thorner	ENGINEERING SERVICES ENROUTE/FSS	DRAWING NO ZLA-D-ARTCC- S102	REV
CHECKED	S. Ericksen			

X:\DRAWINGS 2019\19521 - FAA En Route Engineering Center\S-19521 - FAA En Route Engineering Center - v.20.rvt

11/29/2021 10:55:37 AM

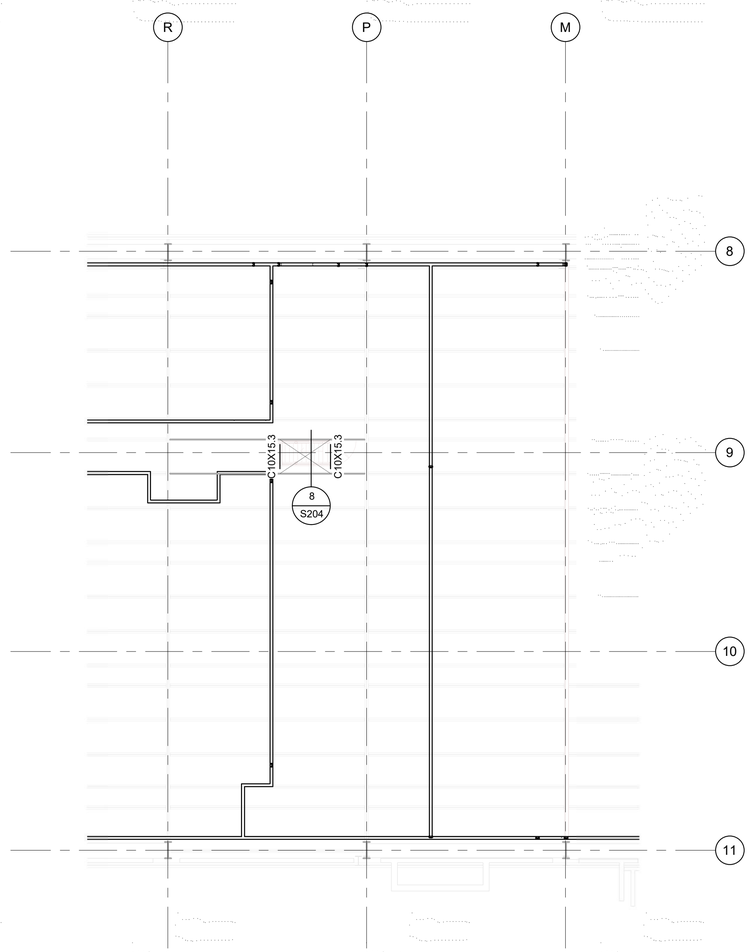

ATTIC FRAMING PLAN

SCALE : 1/8" = 1'-0"

A
S103

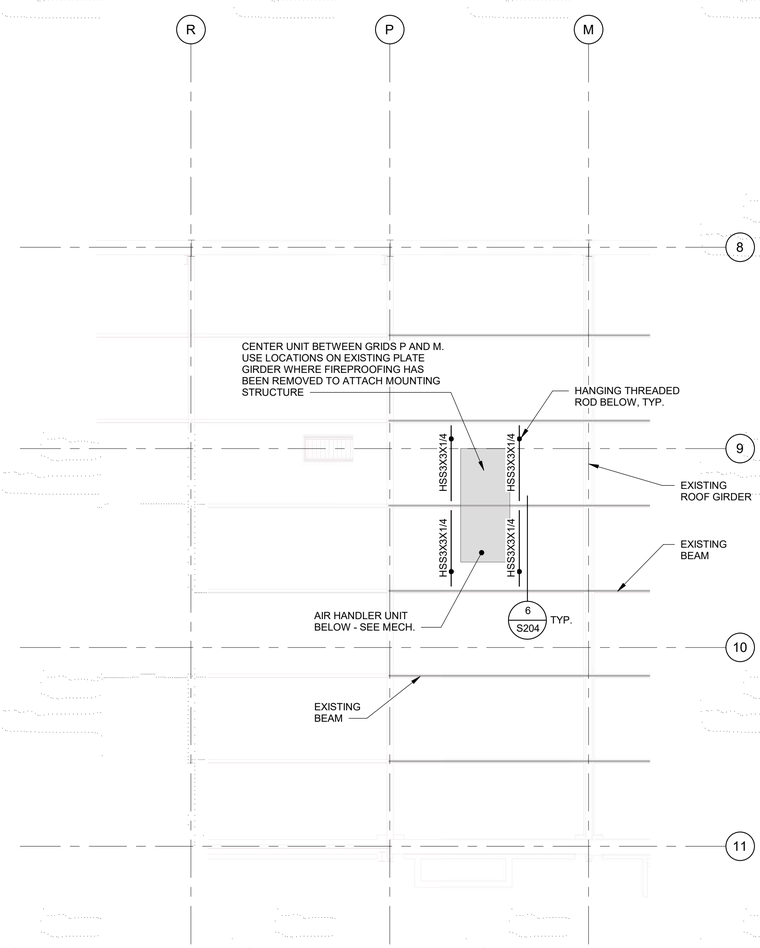

EXISTING ROOF FRAMING PLAN

SCALE : 1/8" = 1'-0"

B
S103

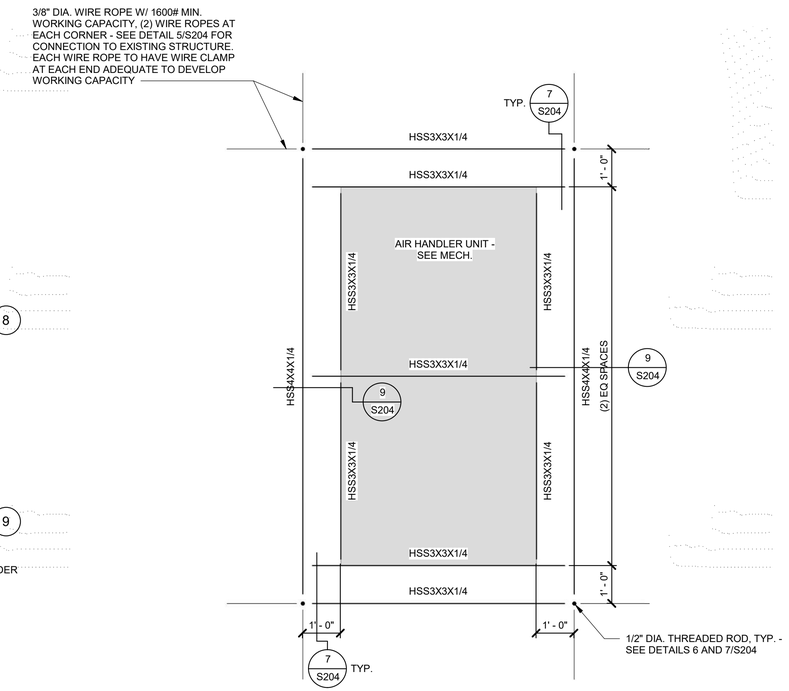

HANGING SUPPORT FRAMING AT AHU

SCALE : 1/2" = 1'-0"

C
S103

REV	APPROVED DATE	DESCRIPTION	JCN	REDLINE DATE	APVD

DEPARTMENT OF TRANSPORTATION
FEDERAL AVIATION ADMINISTRATION
ATO - TECHNICAL OPERATIONS — WESTERN SERVICE AREA

ARTCC
RECONFIGURE M1 ROOM

FRAMING PLANS

PALMDALE — LOS ANGELES CTR — CA

REGISTERED PROFESSIONAL ENGINEER DAVID FIEDLER No. S 4219 Exp. 12.31.23 STRUCTURAL STATE OF CALIFORNIA
11-19-2021

CLH ARCHITECTS ENGINEERS
Case, Lowe & Hart, Inc. 2484 Washington Blvd. Suite 510 Ogden, Utah 84401-2346 801.399.5821 www.clhae.com

E-Corp
BUILDING A WORLD OF DIFFERENCE

REVIEWED BY	SUBMITTED BY		APPROVED BY	
	ART GAPASIN		DARYL KITCHEN	
	PROJECT ENGINEER		MGR. ENGINEERING - LA	
	DESIGNED A. Bown	ISSUED BY	DATE 08.20.2021	JCN 1004394
	DRAWN Z. Thorner	ENGINEERING SERVICES ENROUTE/FSS	DRAWING NO ZLA-D-ARTCC- S103	REV
	CHECKED S. Ericksen			

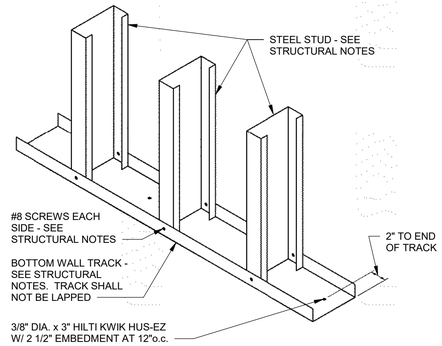

TYPICAL BOTTOM TRACK CONNECTION (1 / S201)

SCALE : NONE

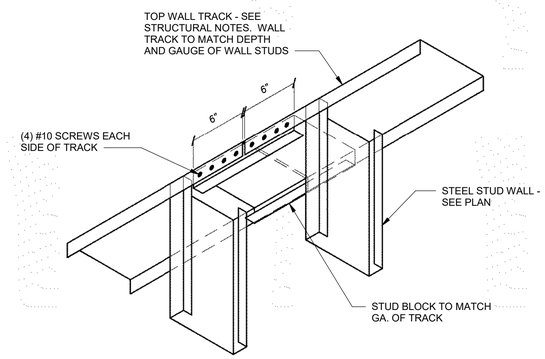

TYP. TRACK SPLICE DETAIL (2 / S201)

SCALE : NONE

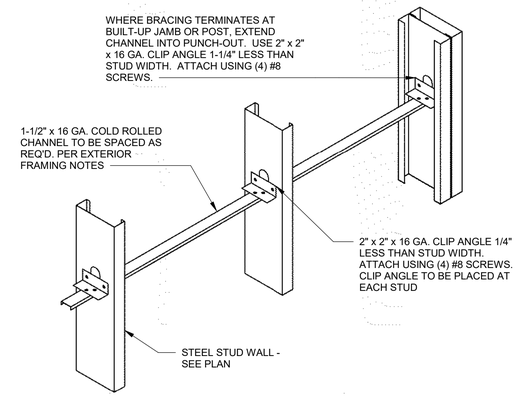

TYPICAL BRIDGING DETAIL (3 / S201)

SCALE : NONE

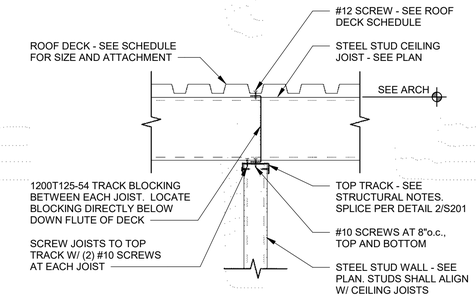

DETAIL (4 / S201)

SCALE : NONE

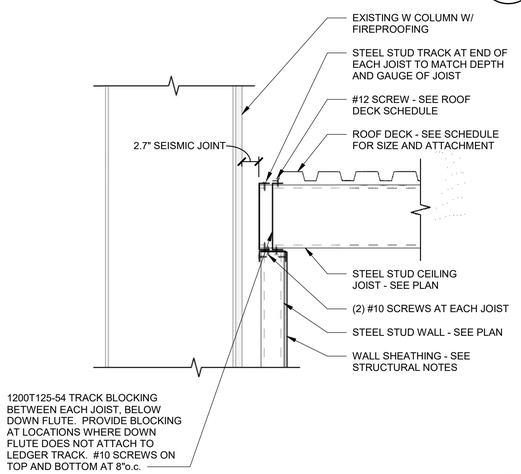

DETAIL (5 / S201)

SCALE : NONE

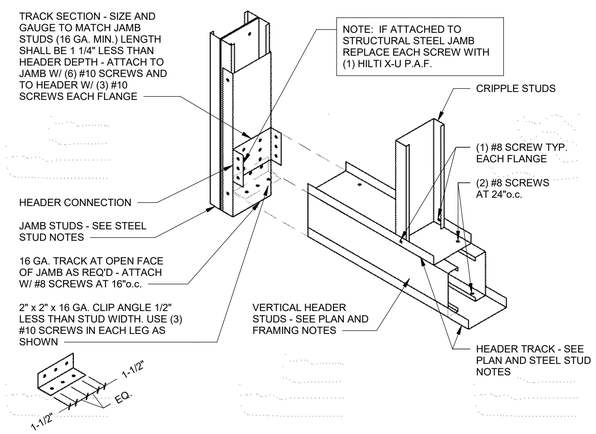

TYP. BOX HEADER CONNECTION (6 / S201)

SCALE : NONE

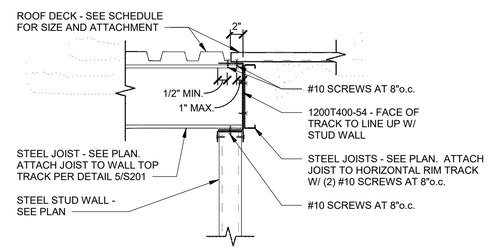

DETAIL (7 / S201)

SCALE : NONE

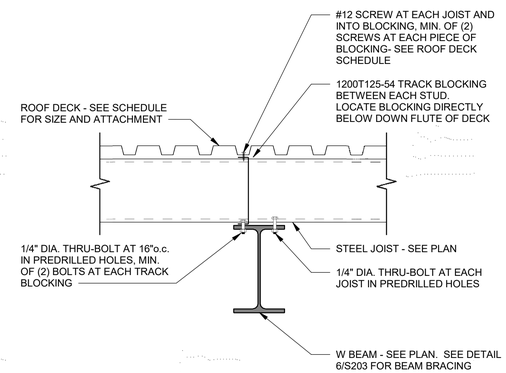

DETAIL (8 / S201)

SCALE : NONE

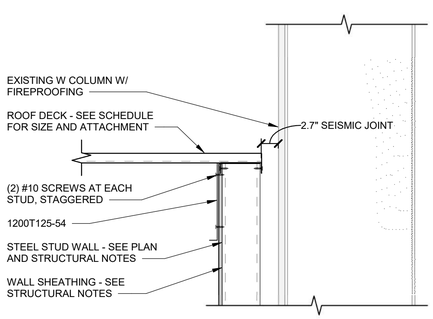

DETAIL (9 / S201)

SCALE : NONE

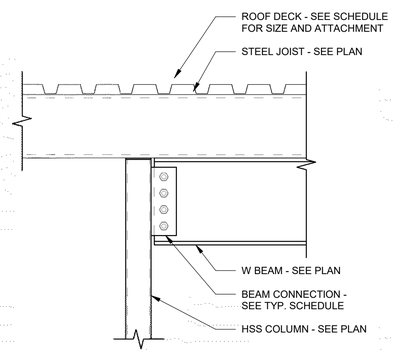

DETAIL (10 / S201)

SCALE : NONE

NOTE: JOISTS NOT SHOWN FOR CLARITY. SEE DETAIL 7/S201

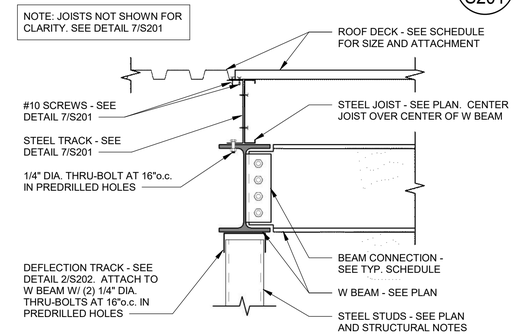

DETAIL (11 / S201)

SCALE : NONE

REV	APPROVED DATE	DESCRIPTION	JCN	REDLINE DATE	APVD

DEPARTMENT OF TRANSPORTATION
FEDERAL AVIATION ADMINISTRATION
ATO - TECHNICAL OPERATIONS — WESTERN SERVICE AREA

ARTCC RECONFIGURE M1 ROOM

DETAILS

PALMDALE — LOS ANGELES CTR — CA

REGISTERED PROFESSIONAL ENGINEER — DAVID L. PIERRON — No. S 4219 — Exp. 12/31/23 — STRUCTURAL — STATE OF CALIFORNIA — 11-19-2021

CLH ARCHITECTS ENGINEERS
Case, Lowe & Hart, Inc. 2484 Washington Blvd. Suite 510 Ogden, Utah 84401-2346 801.399.5821 www.clhae.com

E-Corp — BUILDING A WORLD OF DIFFERENCE

REVIEWED BY	SUBMITTED BY	APPROVED BY
	ART GAPASIN	DARYL KITCHEN
	PROJECT ENGINEER	MGR. ENGINEERING - LA

DESIGNED	A. Bown	ISSUED BY: ENGINEERING SERVICES ENROUTE/FSS	DATE 08.20.2021 — JCN 1004394
DRAWN	Z. Thorner		DRAWING NO ZLA-D-ARTCC- S201 — REV
CHECKED	S. Ericksen		

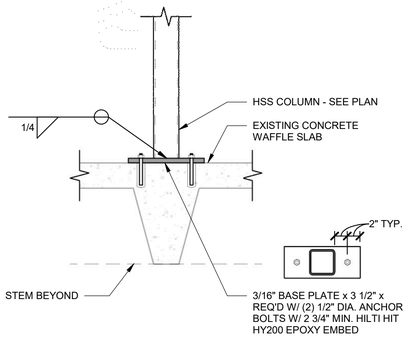

DETAIL 1 S202
SCALE : NONE

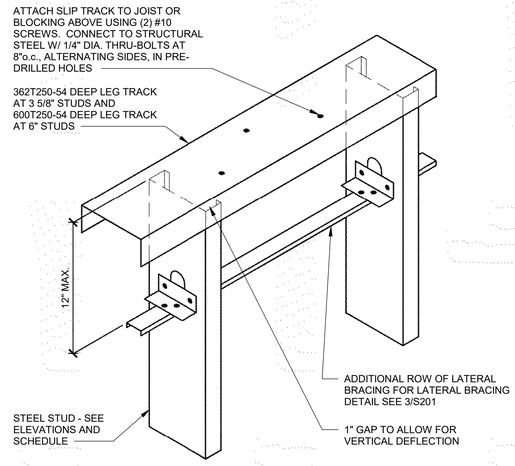

TYPICAL DEFLECTION TRACK 2 S202
SCALE : NONE

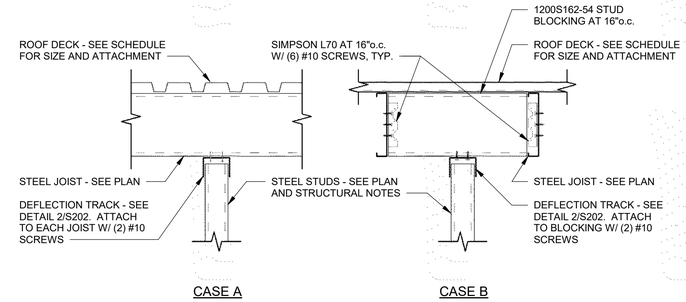

DETAIL 3 S202
SCALE : NONE

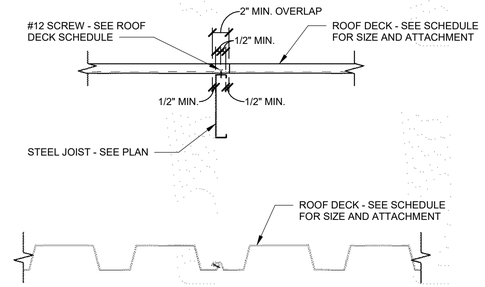

TYP. DECK SPLICE DETAIL 4 S202
SCALE : NONE

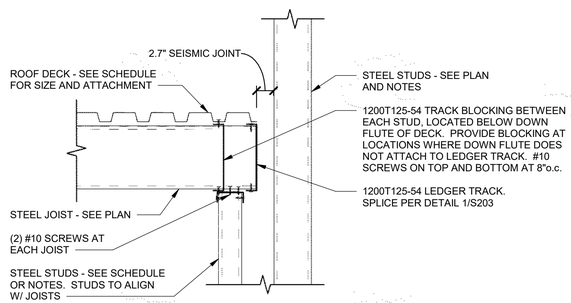

DETAIL 5 S202
SCALE : NONE

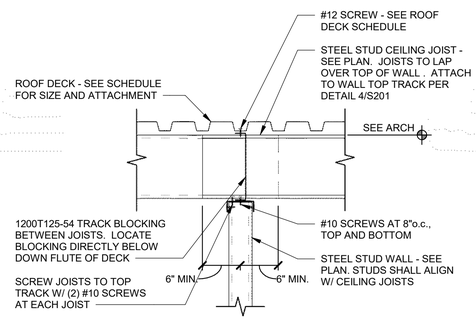

DETAIL 6 S202
SCALE : NONE

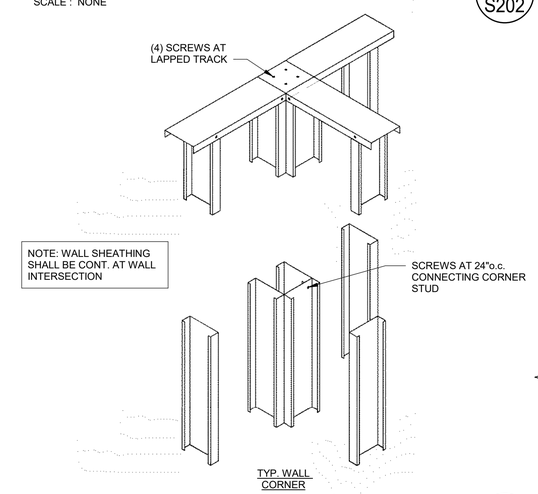

INTERSECTION AT SHEAR WALLS 7 S202
SCALE : NONE

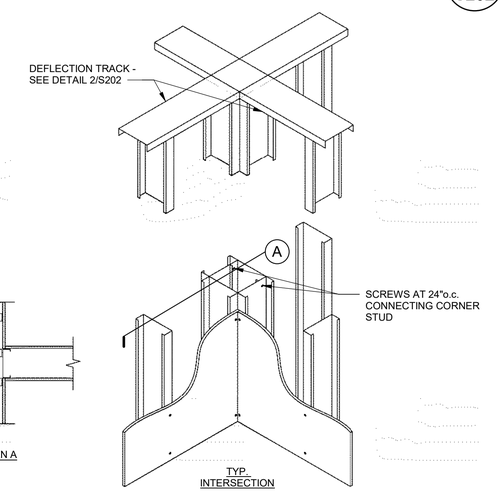

INTERSECTION AT INTERIOR NON-BEARING WALLS 8 S202
SCALE : NONE

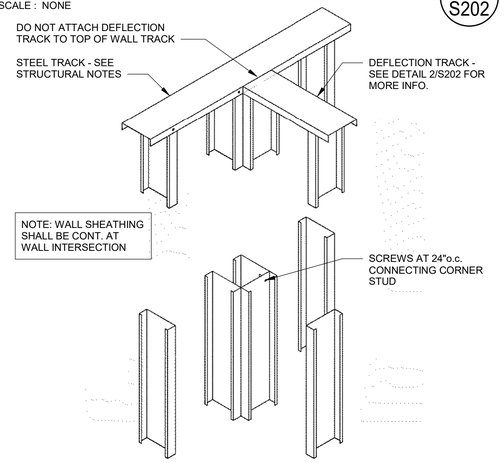

INTERSECTION AT SHEAR WALL AND NON-LOAD BEARING WALL 9 S202
SCALE : NONE

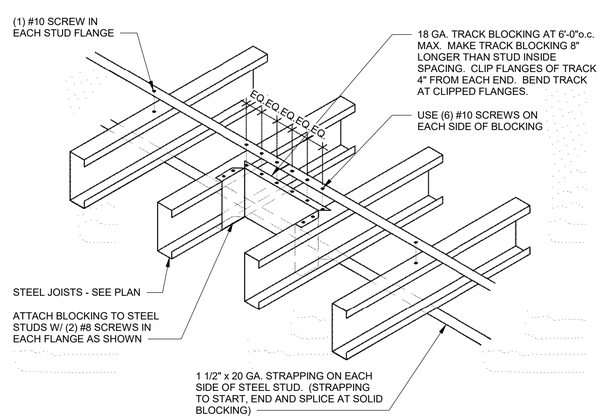

DETAIL 10 S202
SCALE : NONE

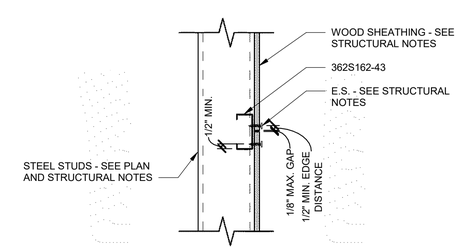

TYP. SHEATHING SPLICE DETAIL 11 S202
SCALE : NONE

REV	APPROVED DATE	DESCRIPTION	JCN	REDLINE DATE	APVD

DEPARTMENT OF TRANSPORTATION
FEDERAL AVIATION ADMINISTRATION
ATO - TECHNICAL OPERATIONS — WESTERN SERVICE AREA

ARTCC RECONFIGURE M1 ROOM

DETAILS

PALMDALE — LOS ANGELES CTR — CA

REGISTERED PROFESSIONAL ENGINEER — DAVID K. PIERCE — No. S 4219 — Exp. 12-31-22 — STRUCTURAL — STATE OF CALIFORNIA — 11-19-2021

CLH ARCHITECTS ENGINEERS
Case, Lowe & Hart, Inc. 2484 Washington Blvd. Suite 510 Ogden, Utah 84401-2346 801.399.5821 www.clhac.com

E-Corp
BUILDING A WORLD OF DIFFERENCE

REVIEWED BY	SUBMITTED BY	APPROVED BY
	ART GAPASIN	DARYL KITCHEN
	PROJECT ENGINEER	MGR. ENGINEERING - LA

DESIGNED	A. Bown	ISSUED BY	DATE 08.20.2021	JCN 1004394
DRAWN	Z. Thorner	ENGINEERING SERVICES ENROUTE/FSS	DRAWING NO ZLA-D-ARTCC- S202	REV
CHECKED	S. Ericksen			

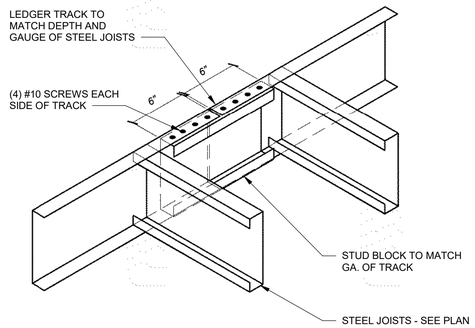

TYP. RIM TRACK SPLICE DETAIL

SCALE : NONE

1 / S203

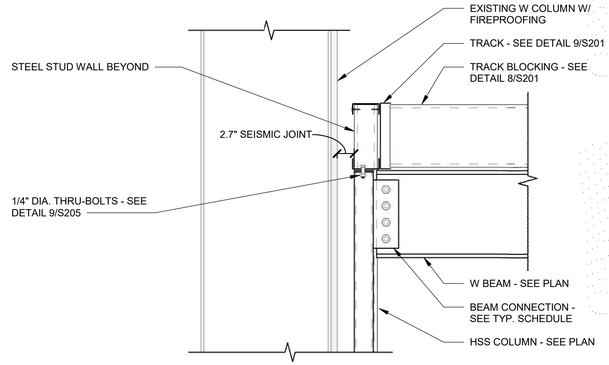

DETAIL

SCALE : NONE

2 / S203

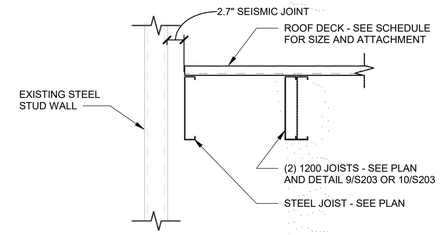

DETAIL

SCALE : NONE

3 / S203

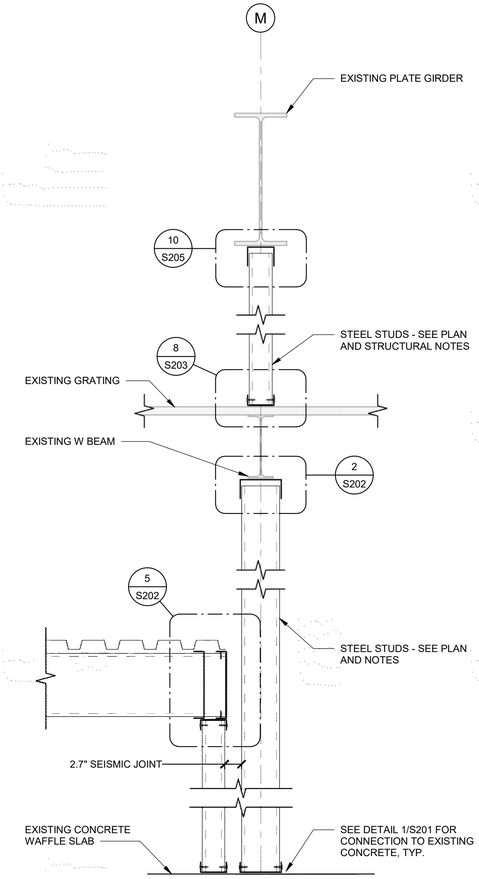

DETAIL

SCALE : NONE

4 / S203

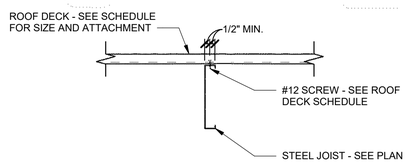

TYP. DECK TO JOIST ATTACHMENT

SCALE : NONE

5 / S203

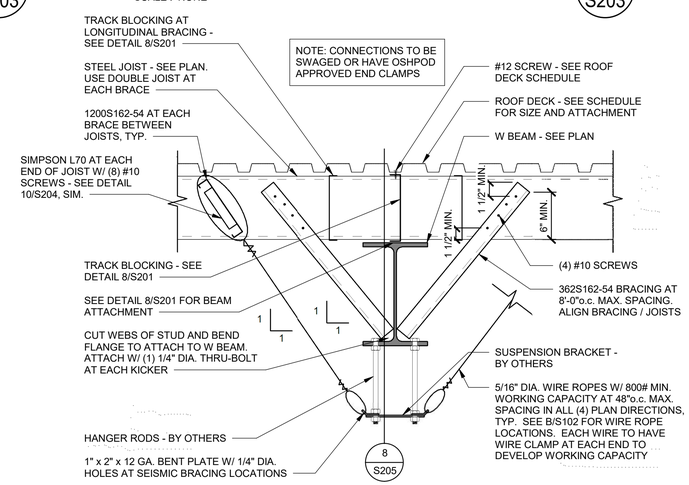

DETAIL

SCALE : NONE

6 / S203

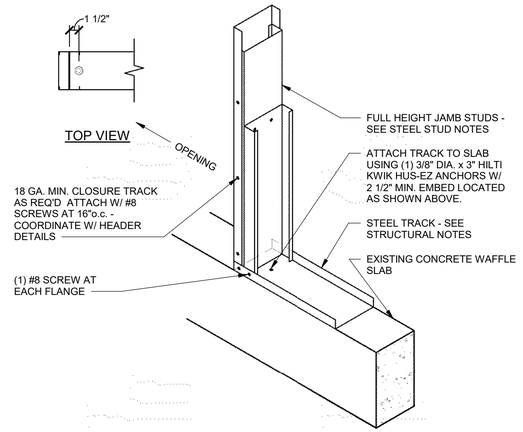

DOOR JAMB ANCHORAGE

SCALE : NONE

7 / S203

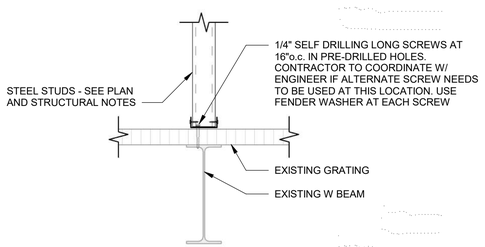

DETAIL

SCALE : NONE

8 / S203

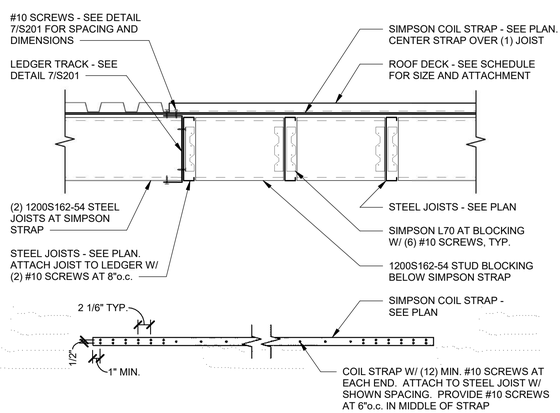

DETAIL

SCALE : NONE

9 / S203

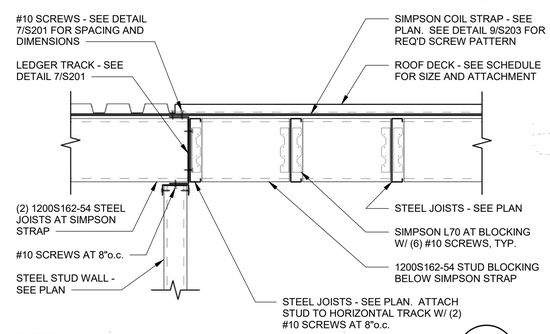

DETAIL

SCALE : NONE

10 / S203

REV	APPROVED DATE	DESCRIPTION	JCN	REDLINE DATE	APVD

DEPARTMENT OF TRANSPORTATION
FEDERAL AVIATION ADMINISTRATION
ATO - TECHNICAL OPERATIONS — WESTERN SERVICE AREA

ARTCC RECONFIGURE M1 ROOM

DETAILS

PALMDALE — LOS ANGELES CTR — CA

REGISTERED PROFESSIONAL ENGINEER — CHRIS L. PIERSON — No. S 4219 — Exp. 12/31/21 — STRUCTURAL — STATE OF CALIFORNIA — 11-19-2021

CLH ARCHITECTS ENGINEERS
Case, Lowe & Hart, Inc. 2484 Washington Blvd. Suite 510 Ogden, Utah 84401-2346 801.399.5821 www.clhac.com

E-Corp — BUILDING A WORLD OF DIFFERENCE

REVIEWED BY	SUBMITTED BY: ART GAPASIN, PROJECT ENGINEER		APPROVED BY: DARYL KITCHEN, MGR. ENGINEERING - LA
	DESIGNED: A. Bown	ISSUED BY: ENGINEERING SERVICES ENROUTE/FSS	DATE: 08.20.2021 — JCN: 1004394
	DRAWN: Z. Thorner		DRAWING NO: ZLA-D-ARTCC- S203 — REV
	CHECKED: S. Ericksen		

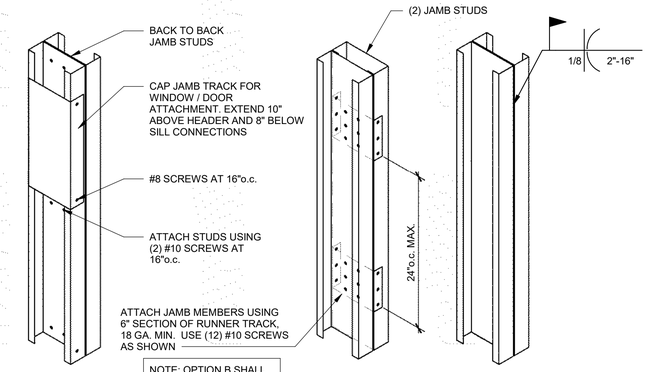

NOTE: OPTION B SHALL NOT BE USED AT STEEL STUD POSTS AT HOLDOWN LOCATIONS

TYPICAL BUILT-UP STUDS STITCHING DETAIL

SCALE : NONE

1 / S204

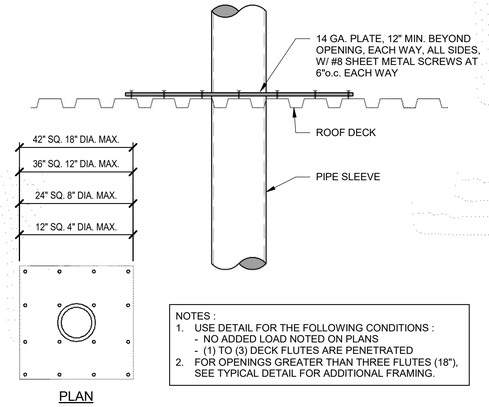

NOTES :
1. USE DETAIL FOR THE FOLLOWING CONDITIONS :
   - NO ADDED LOAD NOTED ON PLANS
   - (1) TO (3) DECK FLUTES ARE PENETRATED
2. FOR OPENINGS GREATER THAN THREE FLUTES (18"), SEE TYPICAL DETAIL FOR ADDITIONAL FRAMING.

TYP. FRAMING @ SMALL ROOF OPENINGS DETAIL

SCALE : NONE

2 / S204

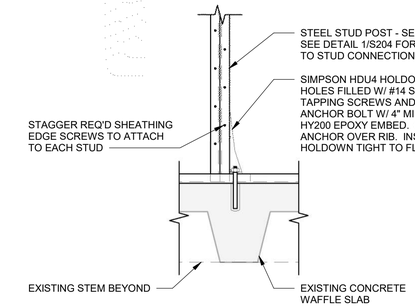

NOTE: MUST SCAN CONCRETE PRIOR TO DRILLING FOR ANCHOR BOLT TO ENSURE EXISTING REINFORCEMENT IS NOT STRUCK. LOCATE HOLDOWN ON FIRST STEM RUNNING PERPENDICULAR TO THE SHEAR WALL, CLOSEST TO THE END OF THE SHEAR WALL.

DETAIL

SCALE : NONE

3 / S204

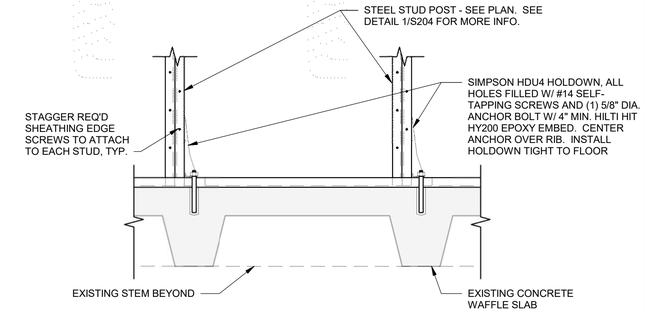

NOTE: MUST SCAN CONCRETE PRIOR TO DRILLING FOR ANCHOR BOLT TO ENSURE EXISTING REINFORCEMENT IS NOT STRUCK. LOCATE HOLDOWNS ON FIRST TWO STEMS RUNNING PERPENDICULAR TO THE SHEAR WALL, CLOSEST TO THE END OF THE SHEAR WALL.

DETAIL

SCALE : NONE

4 / S204

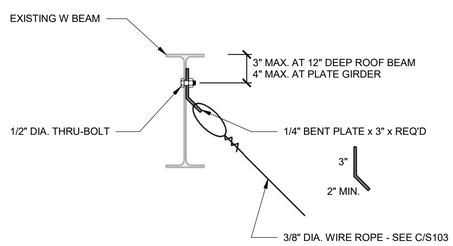

NOTE: CONNECTIONS TO BE SWAGED OR HAVE OSHPOD APPROVED END CLAMPS

DETAIL

SCALE : NONE

5 / S204

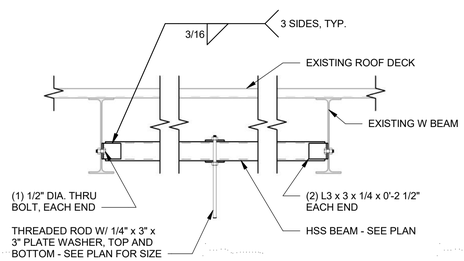

DETAIL

SCALE : NONE

6 / S204

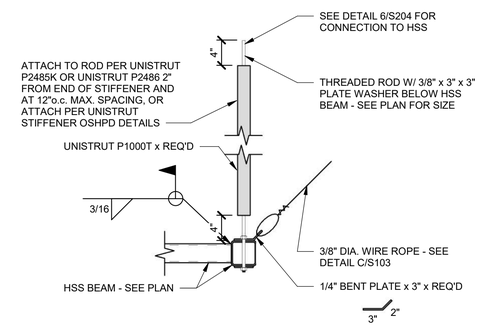

NOTE: CONNECTIONS TO BE SWAGED OR HAVE OSHPOD APPROVED END CLAMPS

DETAIL

SCALE : NONE

7 / S204

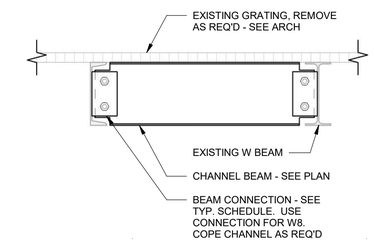

DETAIL

SCALE : NONE

8 / S204

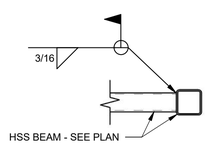

DETAIL

SCALE : NONE

9 / S204

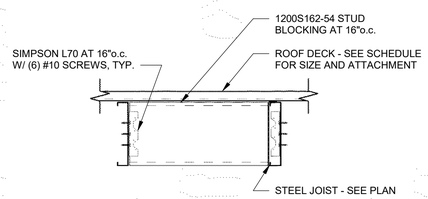

DETAIL

SCALE : NONE

10 / S204

REV	APPROVED DATE	DESCRIPTION	JCN	REDLINE DATE	APVD

DEPARTMENT OF TRANSPORTATION
FEDERAL AVIATION ADMINISTRATION
ATO - TECHNICAL OPERATIONS — WESTERN SERVICE AREA

ARTCC RECONFIGURE M1 ROOM

DETAILS

PALMDALE — LOS ANGELES CTR — CA

REGISTERED PROFESSIONAL ENGINEER — DAVID L. PIERCE — No. S 4219 — Exp. 12/31/23 — STRUCTURAL — STATE OF CALIFORNIA — 11-19-2021

CLH ARCHITECTS ENGINEERS
Case, Lowe & Hart, Inc. 2484 Washington Blvd. Suite 510 Ogden, Utah 84401-2346 801.399.5821 www.clhae.com

E-Corp — BUILDING A WORLD OF DIFFERENCE

REVIEWED BY	SUBMITTED BY		APPROVED BY	
	ART GAPASIN		DARYL KITCHEN	
	PROJECT ENGINEER		MGR. ENGINEERING - LA	
	DESIGNED A. Bown	ISSUED BY	DATE 08.20.2021	JCN 1004394
	DRAWN Z. Thorner	ENGINEERING SERVICES ENROUTE/FSS	DRAWING NO ZLA-D-ARTCC- S204	REV
	CHECKED S. Ericksen			

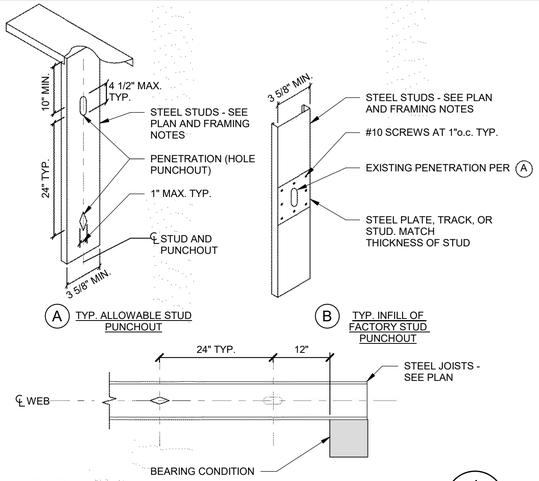

TYP. DETAIL

SCALE : NONE

1 / S205

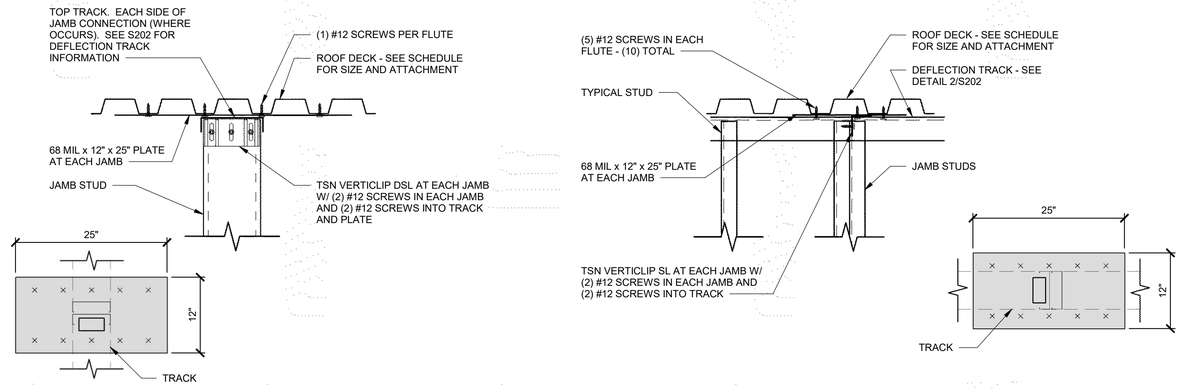

TYPICAL JAMB DEFLECTION CONNECTION DETAIL

SCALE : NONE

2 / S205

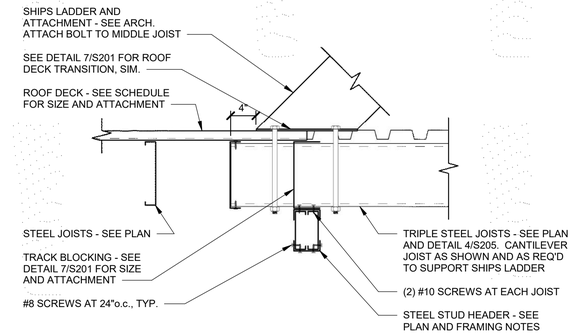

DETAIL

SCALE : NONE

3 / S205

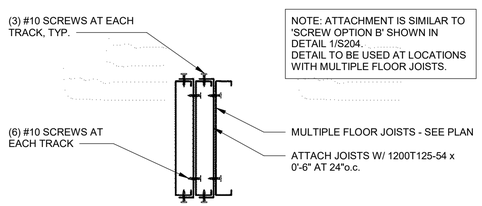

NOTE: ATTACHMENT IS SIMILAR TO "SCREW OPTION B" SHOWN IN DETAIL 1/S204. DETAIL TO BE USED AT LOCATIONS WITH MULTIPLE FLOOR JOISTS.

DETAIL

SCALE : NONE

4 / S205

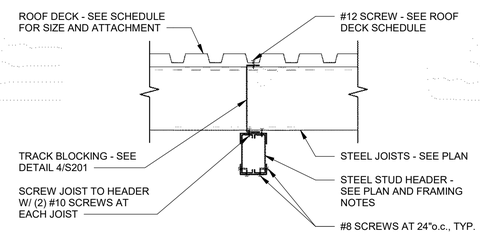

NOTE: WHERE JOIST IS NOT CONT. OVER TOP OF WALL / HEADER, SEE DETAIL 6/S202 FOR JOIST CONNECTION

DETAIL

SCALE : NONE

5 / S205

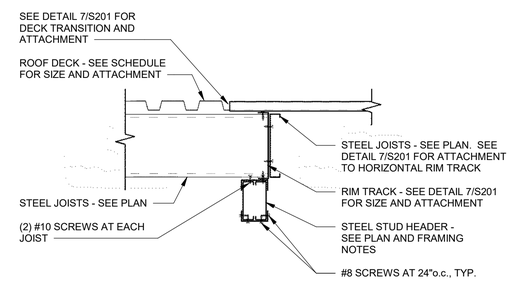

DETAIL

SCALE : NONE

6 / S205

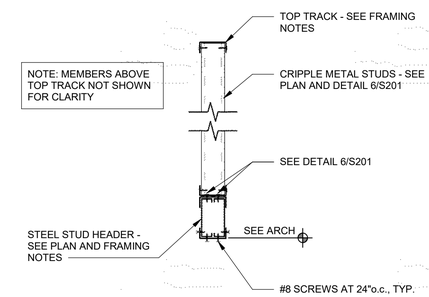

NOTE: MEMBERS ABOVE TOP TRACK NOT SHOWN FOR CLARITY

DETAIL

SCALE : NONE

7 / S205

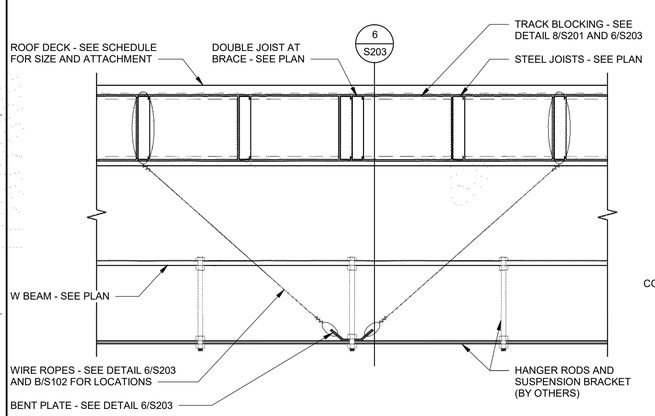

DETAIL

SCALE : NONE

8 / S205

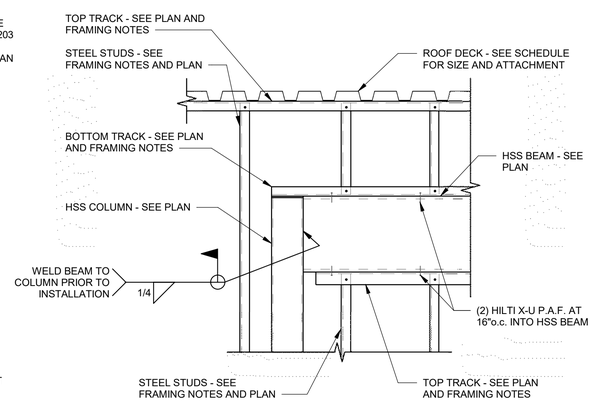

DETAIL

SCALE : NONE

9 / S205

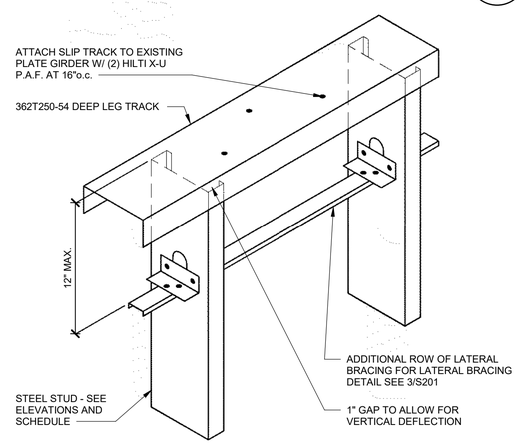

TYP. DEFLECTION TRACK

SCALE : NONE

10 / S205

REV	APPROVED DATE	DESCRIPTION	JCN	REDLINE DATE	APVD

DEPARTMENT OF TRANSPORTATION
FEDERAL AVIATION ADMINISTRATION
ATO - TECHNICAL OPERATIONS — WESTERN SERVICE AREA

ARTCC
RECONFIGURE M1 ROOM

DETAILS

PALMDALE — LOS ANGELES CTR — CA

REGISTERED PROFESSIONAL ENGINEER — DAVID L. PIERCE — No. S 4219 — Exp. 6/30/23 — STRUCTURAL — STATE OF CALIFORNIA — 11-19-2021

CLH ARCHITECTS ENGINEERS
Case, Lowe & Hart, Inc. 2484 Washington Blvd. Suite 510 Ogden, Utah 84401-2346 801.399.5821 www.clhae.com

E-Corp — BUILDING A WORLD OF DIFFERENCE

REVIEWED BY	SUBMITTED BY		APPROVED BY	
	ART GAPASIN		DARYL KITCHEN	
	PROJECT ENGINEER		MGR. ENGINEERING - LA	
	DESIGNED A. Bown	ISSUED BY	DATE 08.20.2021	JCN 1004394
	DRAWN Z. Thorner	ENGINEERING SERVICES ENROUTE/FSS	DRAWING NO ZLA-D-ARTCC- S205	REV
	CHECKED S. Ericksen			

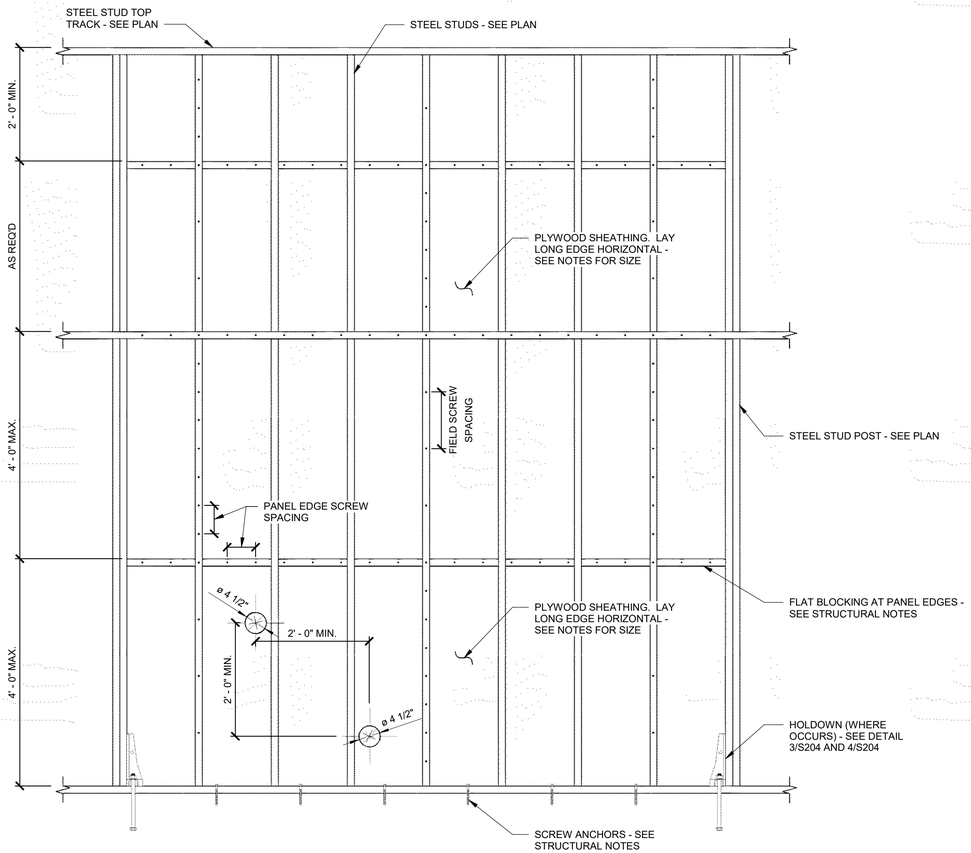

NOTES:
1. THE MAXIMUM ACCUMULATED LENGTH OF OPENINGS IN A SHEAR WALL PANEL SHALL NOT EXCEED 20% OF WALL LENGTH. MAXIMUM LENGTH OF EACH OPENING SHALL NOT EXCEED 4 1/2" IN ANY DIRECTION.
2. (2) 4 1/2" WIDE CUTS = 9" IN A 4'-0" PANEL. THE 20% ALLOWABLE EQUALS 9.6". (NO CUTS OR HOLES IN SHEATHING WITHIN 16" OF CORNERS)

DETAIL 1/S206
SCALE : NONE

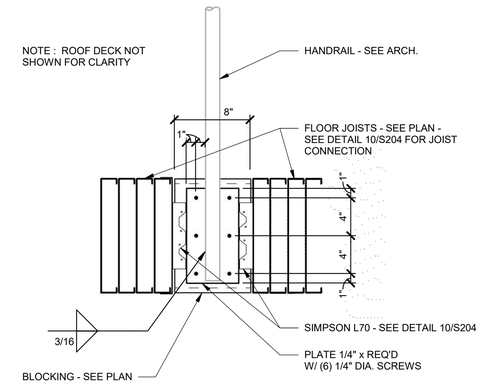

DETAIL 2/S206
SCALE : NONE

REV	APPROVED DATE	DESCRIPTION	JCN	REDLINE DATE	APVD

DEPARTMENT OF TRANSPORTATION
FEDERAL AVIATION ADMINISTRATION
ATO - TECHNICAL OPERATIONS — WESTERN SERVICE AREA

ARTCC RECONFIGURE M1 ROOM
DETAILS

PALMDALE — LOS ANGELES CTR — CA

REVIEWED BY

SUBMITTED BY: ART GAPASIN, PROJECT ENGINEER
APPROVED BY: DARYL KITCHEN, MGR. ENGINEERING - LA
DESIGNED: Designer
DRAWN: Author
CHECKED: Checker
ISSUED BY: ENGINEERING SERVICES ENROUTE/FSS
DATE: 08.20.2021
JCN: 1004394
DRAWING NO: ZLA-D-ARTCC- S206
REV

CLH ARCHITECTS ENGINEERS
Case, Lowe & Hart, Inc. 2484 Washington Blvd. Suite 510 Ogden, Utah 84401-2346 801.399.5821 www.clhae.com

E-Corp
BUILDING A WORLD OF DIFFERENCE

REGISTERED PROFESSIONAL ENGINEER DAVID L. PIERCE No. S 4219 Exp. 12.31.23 STRUCTURAL STATE OF CALIFORNIA
11-19-2021

X:\DRAWINGS 2019\19521 - FAA En Route Engineering Center\S-19521 - FAA En Route Engineering Center - v.20.rvt
11/29/2021 10:55:46 AM

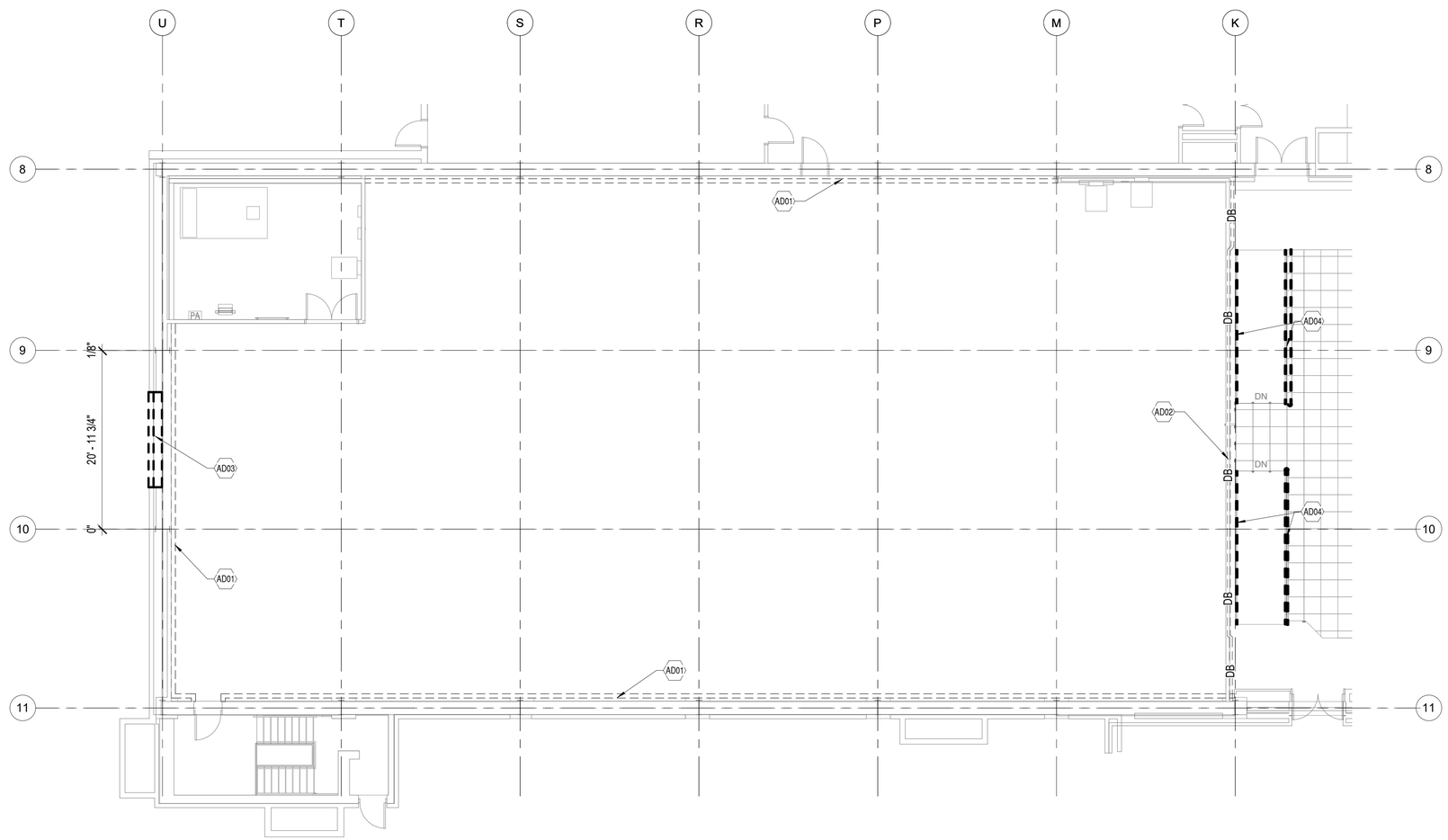

C8 DEMO FLOOR PLAN

1/8" = 1'-0"

0 4' 8' 16'

GENERAL NOTES:

A. DEVELOP RISK MITIGATION PLANS WITH COR ON THE FOLLOWING ISSUES:
   a. DISRUPTION TO THE CONTROL ROOM 1052.
   b. MAINTAINING SECURITY TO THE BUILDING DURING THE WORK.
   c. MAINTAINING ACCESS AS REQUIRED FOR FAA TO THE CONTROL WING.
   d. STAGING OF DEMOLITION OF THE CONTROL ROOM WALL AND CONSTRUCTION OF THE NEW WALL ON GRIDLINE "M".

B. CONTRACTOR SHALL PROVIDE DUST-PROOF PARTITIONS MAINTAINED AT ALL TIMES TO PREVENT INTRUSION OF CONSTRUCTION DUST AND DEBRIS FROM ENTERING THE FACILITY.

C. THE CONTRACT DOCUMENTS ASSUME THERE IS NO ASBESTOS CONTAINING OR OTHER HAZARDOUS MATERIALS WITHIN THE WORK AREA.

D. ALL DEBRIS SHALL BE REMOVED FROM THE BUILDING AND ALL AREAS SHALL BE LEFT IN A BROOM-CLEAN CONDITION AT THE END OF EACH WORK SHIFT.

E. CONTRACTOR SHALL DEMO REMAINING MATERIALS THAT WERE LEFT THAT IS NOTING BEING USED FOR NEW INSTALLATION OF SYSTEMS(ELECTRICAL, HVAC MECHANICAL, CONTROLS,ETC

F. DEMO OF UPPER WALL SEPARATING DSR ATTIC AND M1 STILL NEEDS TO BE COMPLETED AT THE END OF PROJECT AFTER THE MAJOR PORTION OF HE M1 PROJECT IS COMPLETED TO REUSE IN DSR ATTIC AND NEW CONTROL ROOM FLOOR.

G. DEMO OF DUST BARRIER WALL IN THE CONTROL ROOM COMES LAST AND DUST CONTROL MEASURES SHALL BE TAKEN IN DSR ATTIC AND CONTROL ROOM WHEN DEMO OF DUST BARRIER WALL IS COMPLETED.

H. DEMO AND REMOVAL OF ANY CONTROL AND ELECTRICAL WIRING, CONDUIT, SUPPORTS, HANGERS THAT ARE NOT BEING REUSED IN REQUIRED.

I. CONTRACTOR SHALL FIELD VERIFY THAT ALL PREVIOUS DEMO WAS COMPLETED TO COMPLETE THE CONTRACT.

J. CONTRACTOR IS REQUIRED TO FINISH ANY UNFINISHED.

K. CONTRACTOR TO VERIFY ALL DEMO OF ORIGINAL M1 CEILING IS COMPLETED . FIELD VERIFY, CONTRACTOR SHALL COMPLETE ANY DEMO THAT WAS NOT PERFORMED.

DEMOLITION KEY NOTES

AD01 REMOVE METAL STUD AND GWB PARTITIONS AND DOOR ASSEMBLIES AS INDICATED.

AD02 PROVIDE DUST BARRIERS.

AD03 REMOVE (E) KO PANEL FOR CONSTRUCTION AND REPLACE AT END OF CONSTRUCTION.

AD04 REMOVE EXISTING GUARDRAIL AND HANDRAIL AND REPLACE, MEETING ABA.

DEMO LEGEND

= = = = = = = PARTITIONS, DOORS, TO BE REMOVED

= = =DB= = = = DUST BARRIER

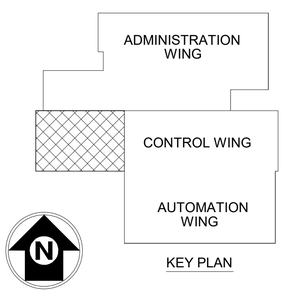

KEY PLAN

REV	APPROVED DATE	DESCRIPTION	JCN	REDLINE DATE	APVD

DEPARTMENT OF TRANSPORTATION
FEDERAL AVIATION ADMINISTRATION
ATO - TECHNICAL OPERATIONS WESTERN SERVICE AREA

ARTCC
RECONFIGURE M1 ROOM

DEMO FLOOR PLAN

STATE OF UTAH
STEVEN J. PETERSON
6830295-0301
LICENSED ARCHITECT
02/04/2022

CLH ARCHITECTS ENGINEERS
Case, Lowe & Hart, Inc. 2484 Washington Blvd. Suite 510 Ogden, Utah 84401-2346 801.399.5821 www.clhac.com

E-Corp
BUILDING A WORLD OF DIFFERENCE

PALMDALE LOS ANGELES CTR CA

REVIEWED BY	SUBMITTED BY		APPROVED BY	
	ART GAPASIN		DARYL KITCHEN	
	PROJECT ENGINEER		MGR. ENGINEERING - LA	
	DESIGNED KDL	ISSUED BY	DATE 02.04.2021	JCN 1004394
	DRAWN KDL	ENGINEERING SERVICES ENROUTE/FSS	DRAWING NO ZLA-D-ARTCC- AD101	REV
	CHECKED SJP			

16530
2/4/2022 9:03:32 AM

ARCHITECTURAL NOTES

1. THE STRUCTURAL DRAWINGS PRECEDENCE ARCHITECTURAL DRAWINGS AS THE PRIMARY CONTRACT DOCUMENTS. ANY CONFLICTS BETWEEN ARCHITECTURAL DRAWINGS AND EXISTING CONDITIONS AND/OR DRAWINGS OF OTHER DISCIPLINES SHALL BE IMMEDIATELY REPORTED TO THE ARCHITECT.

2. THE CONTRACTOR SHALL VERIFY ALL EXISTING CONDITIONS PRIOR TO ANY WORK. ITEMS AND DIMENSIONS BETWEEN EXISTING AND NEW PORTIONS OF THE PROJECT SHALL BE VERIFIED TO ENSURE COORDINATION.

3. THE CONTRACTOR SHALL SUBMIT ANY PROPOSED CHANGES OR MODIFICATIONS OF THE CONTRACT DOCUMENTS, IN WRITING, TO THE ARCHITECT BEFORE PROCEEDING WITH ANY ACTION.

4. WHERE SPECIFIC DETAILS ARE NOT PROVIDED, TYPICAL OR SIMILAR INDUSTRY STANDARD DETAILS SHALL APPLY. IF FURTHER DETAIL IS REQUIRED CONTACT ARCHITECT.

5. DETAILS ARE PROVIDED FOR VISUAL REPRESENTATION OF DESIGN INTENT. OFTEN THE DETAILS ARE BASED ON A BASIS-OF-DESIGN PRODUCT AND/OR MATERIAL AND MAY BE DIAGRAMMATIC IN NATURE.

6. IF A DIFFERENT PRODUCT OR MATERIAL FROM THAT INDICATED ON THE DRAWINGS OR SPECIFICATIONS IS SUBSTITUTED, IT IS THE RESPONSIBILITY OF THE CONTRACTOR TO PROVIDE ALTERNATE DETAILS AS REQUIRED FOR THE ARCHITECT TO REVIEW.

7. GENERALLY, DIMENSIONS SHOWN OF ARCHITECTURAL DRAWINGS ARE TAKEN FROM THE CORE STRUCTURE FACE (IE. CONCRETE WALL=FACE OF WALL; STUD WALL=FACE OF STUD).

8. ANY ADDITIONAL BLOCKING, BRACING, TRIM, FLASHING, SEALANTS, ETC. REQUIRED FOR INSTALLATION OF COMPLETE SYSTEMS_ PERTAINING TO DOORS, WINDOWS, OPENINGS, PENETRATIONS, ETC. ARE EXPECTED TO BE PROVIDED AND INSTALLED BY THE CONTRACTOR.

9. ASSUME ALL GYP. BD. WALLS TO HAVE TOPSET RUBBER BASE INSTALLED UNLESS NOTED OTHERWISE.

10. PROVIDE SEALANT OR TRIM AS APPROPRIATE WHERE DISSIMILAR MATERIALS COME IN CONTACT.

11. PROVIDE FLOORING TRANSITION WHERE DISSIMILAR FLOORING MATERIALS OCCUR.

12. PAINT ALL MISCELLANEOUS SURFACES, SUPPORTS, METALS, ETC. IF PERMANENTLY ATTACHED TO PAINTED SURFACE OR EXPOSED TO THE ELEMENTS.

SYMBOLS

1 View Name 1/8" = 1'-0"	VIEW TITLE
0 1" 2"	GRAPHIC SCALE
	NORTH ARROW w/ TRUE NORTH
0	GRID INDICATOR
SIM 1 A101	SECTION CALLOUT
SIM 1 A101	DETAIL CALLOUT
SIM 1 A101	DETAIL CALLOUT
Ref 1 A101 Ref 1	ELEVATION CALLOUT
Name Elevation	LEVEL / ELEVATION CALLOUT
100'-0"	SPOT ELEVATION CALLOUT
1:12	ROOF SLOPE INDICATOR
Room name 101	ROOM TAG
101A	DOOR TAG
A	WALL TAG
11	WINDOW TAG
A	DEMOLITION KEYNOTE
FD	FIRE RISER

ABBREVIATIONS

&	AND	JAN	JANITOR
L	ANGLE	JST	JOIST
@	AT	JT	JOINT
#	POUND OR NUMBER	K.O.	KNOCK OUT
AC	ACOUSTICAL		
A.F.F.	ABOVE FINISH FLOOR	LAM	LAMINATE
ALUM	ALUMINUM	LAV	LAVATORY
APPROX	APPROXIMATE		
ARCH	ARCHITECTURAL	MAX	MAXIMUM
ASPH	ASPHALT	MAS	MASONRY
		MECH	MECHANICAL
BD	BOARD	MEMB	MEMBRANE
BITUM	BITUMINOUS	MTL	METAL
BLDG	BUILDING	MFTR	MANUFACTURER
BLKG	BLOCKING	MH	MANHOLE
BRG	BEARING	MIN	MINIMUM
BTM	BOTTOM	MISC	MISCELLANEOUS
		M.O.	MASONRY OPENING
C	TOP OF FINISH CONCRETE	MTD	MOUNTED
C.I.	CAST IRON		
C.J.	CONTROL JOINT	N	NORTH
C.L.	CENTER LINE	N.I.C.	NOT IN CONTRACT
CLG	CEILING	NO or #	NUMBER
CLR	CLEAR	NOM	NOMINAL
C.M.U.	CONCRETE MASONRY UNIT	N.T.S.	NOT TO SCALE
C.O.	CLEAN OUT		
C.O.T.G.	CLEAN OUT AT GRADE	O.C.	ON CENTER
COL	COLUMN	O.D.	OUTSIDE DIAMETER (DIM)
CONC	CONCRETE	OFF	OFFICE
CONN	CONNECTION	OH	OVERHEAD
CONSTR	CONSTRUCTION	OPNG	OPENING
CONT	CONTINUOUS	OPP	OPPOSITE
C.T.	CERAMIC TILE		
CTR	CENTER	PL	PLATE
		PLAM	PLASTIC LAMINATE
D.C.W.	DOMESTIC COLD WATER	PLYWD	PLYWOOD
D.H.W.	DOMESTIC HOT WATER	P.O.C.	POINT OF CONNECTION
D.F.	DRINKING FOUNTAIN	PNL	PANEL
DTL	DETAIL	PR	PAIR
DIA	DIAMETER	PT	POINT
DIM	DIMENSION		
DISP	DISPENSER	Q.T.	QUARRY TILE
DN	DOWN		
DRN	DRAIN	RAD	RADIUS
DS	DOWNSPOUT	R.D.	ROOF DRAIN
DWG	DRAWING	REF	REFERENCE
		REINF	REINFORCED
E	EAST	REQD	REQUIRED
EA	EACH	RESIL	RESILIENT
E.I.F.S.	EXTERIOR INSULATION FINISH SYSTEM	RFG	ROOFING
E.J.	EXPANSION JOINT	RM	ROOM
EL	ELEVATION	RS	RESINOUS FLOORING
ELEC	ELECTRICAL	R.O.	ROUGH OPENING
ENGR	ENGINEER		
EQ	EQUAL	S	SOUTH
EQUIP	EQUIPMENT	SCH	SCHEDULE
(E)	EXISTING	SECT	SECTION
EXP	EXPANSION	SHT	SHEET
EXT	EXTERIOR	SIM	SIMILAR
		SPECS	SPECIFICATION
F.A.	FIRE ALARM	SQ	SQUARE
F.D.	FLOOR DRAIN	S.S.	SANITARY SEWER
FDN	FOUNDATION	S.ST	STAINLESS STEEL
F.E.	FIRE EXTINGUISHER	STD	STANDARD
F.E.C.	FIRE EXTINGUISHER CABINET	STL	STEEL
FIN	FINISH	STOR	STORAGE
FLR	FLOOR	STR	STRUCTURAL
FLASH	FLASHING	SUSP	SUSPENDED
FLUOR	FLUORESCENT	SYM	SYMMETRICAL
F.O.	FACE OF	SYS	SYSTEM
F.R.	FIRE RATED		
FT	FOOR OR FEET	TLT	TOILET (ROOM)
FTG	FOOTING	TRTD	TREATED (PRESERVATIVE
FUT	FUTURE	T & B	TOP & BOTTOM
		T.O.	TOP OF
GA	GAUGE	TRANS	TRANSFORMER
GALV	GALVANIZED	TYP	TYPICAL
GND	GROUND		
GR	GRADE	U.N.O.	UNLESS NOTED OTHERWISE
G.W.B.	GYPSUM WALL BOARD	UT	URINAL
GYP	GYPSUM		
		VERT	VERTICAL
H.B.	HOSE BIBB	VEST	VESTIBULE
HC	HANDICAP		
H.M.	HOLLOW METAL	W	WEST
HORIZ	HORIZONTAL	w/	WITH
HGT	HEIGHT	WC	WATER CLOSET
		WD	WOOD
I.D.	INSIDE DIAMETER (DIM)	W/O	WITHOUT
IN	INCH, INCHES	WP	WATERPROOF
INSUL	INSULATION		
INT	INTERIOR		

STATE OF UTAH
STEVEN J. PETERSON
6830295-0301
LICENSED ARCHITECT
02/04/2022

CLH ARCHITECTS ENGINEERS
Case, Lowe & Hart, Inc. 2484 Washington Blvd.
Suite 510 Ogden, Utah 84401-2346
801.399.5821 www.clhae.com

E-Corp
BUILDING A WORLD OF DIFFERENCE

REV	APPROVED DATE	DESCRIPTION	JCN	REDLINE DATE	APVD

DEPARTMENT OF TRANSPORTATION
FEDERAL AVIATION ADMINISTRATION
ATO - TECHNICAL OPERATIONS WESTERN SERVICE AREA

ARTCC
RECONFIGURE M1 ROOM

ARCHITECTURAL NOTES

PALMDALE LOS ANGELES CTR CA

REVIEWED BY	SUBMITTED BY: ART GAPASIN, PROJECT ENGINEER		APPROVED BY: DARYL KITCHEN, MGR. ENGINEERING - LA
	DESIGNED KDL	ISSUED BY: ENGINEERING SERVICES ENROUTE/FSS	DATE 02.04.2021 / JCN 1004394
	DRAWN KDL		DRAWING NO ZLA-D-ARTCC- A001 / REV
	CHECKED SJP		

2/4/2022 9:03:09 AM 19530

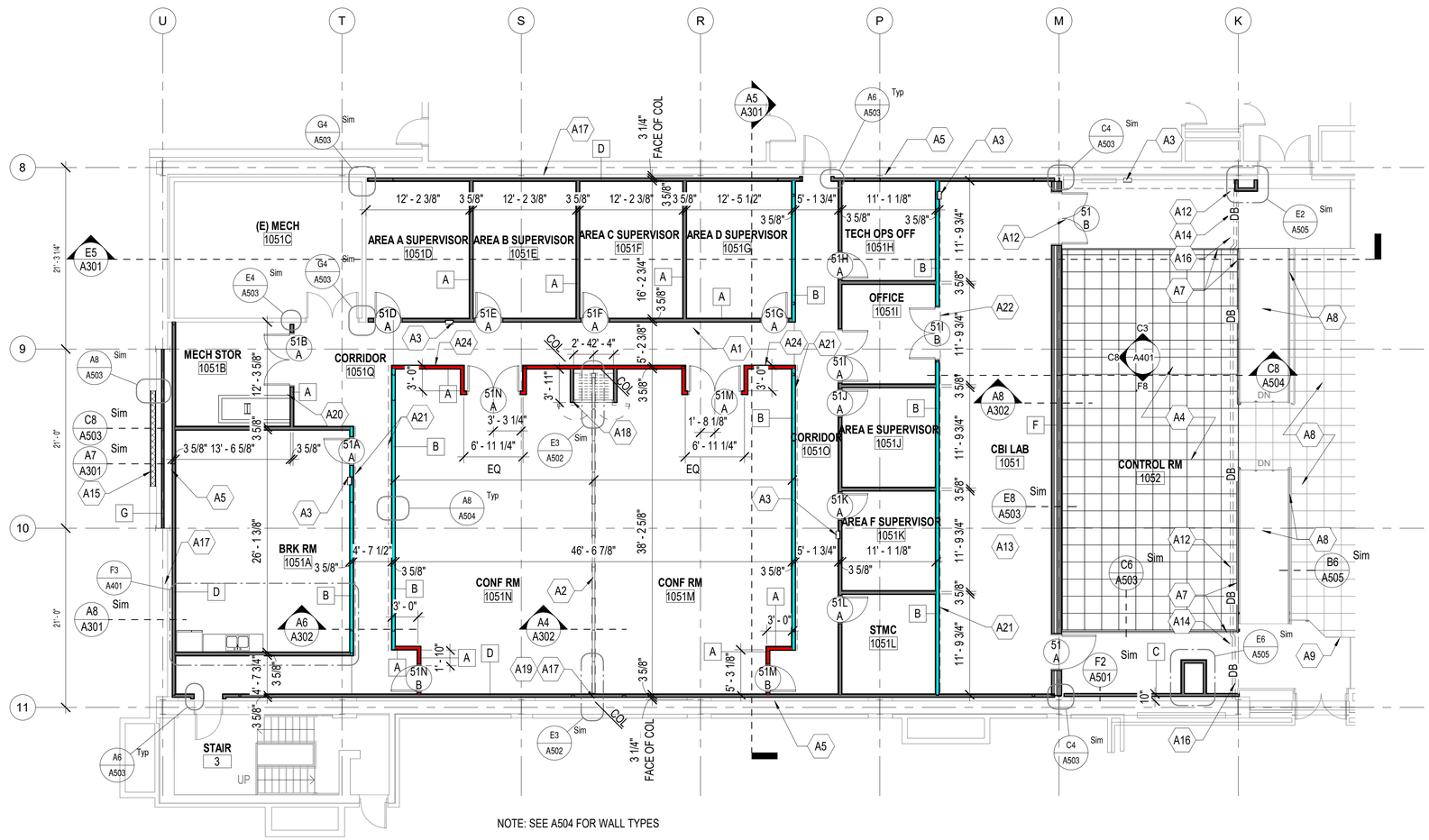

C8 MAIN FLOOR PLAN
1/8" = 1'-0"

KEY NOTES:

- A1 PROVIDE VERTICAL CONTROL JOINTS AT 30'-0" IN NEW GWB. SEE DETAIL C7/A504, ALIGN JOINTS WITH DOOR JAMBS WHERE POSSIBLE. CONTROL JOINT IS NOT REQUIRED IN SHEAR WALLS- WALL TYPE "B"
- A2 PROVIDE OPERABLE (STACKABLE) PARTITION, MOUNTED TO BEAM ABOVE
- A3 SEMI-RECESSED FIRE EXTINGUISHER CABINET WITH DRY CHEMICAL FIRE EXTINGUISHER. PROVIDE BLOCKING AS REQUIRED. FIELD VERIFY EXACT LOCATION WITH PROJECT MANAGER
- A4 NEW RAISED FLOOR, SEE SPECIFICATION.
- A5 2.7" EXP JOINT BETWEEN EXISTING WALL AND NEW PARTITION.
- A6 PROVIDE HORIZONTAL BLOCKING FOR FLAT-SCREEN TV INSTALLATION (TV BY OTHERS). PROVIDE RECEPTACLE AT 48"AFF-SEE ELECTRICAL. COORDINATE EXACT LOCATION WITH COR.
- A7 NEW RAISED FLOOR SYSTEM GUARD RAILS.
- A8 EXISTING RAISED FLOOR SYSTEM & RAMPS. REMOVE (E) GUARDRAIL AND PROVIDE NEW GUARDRAIL TO MEET ABA.
- A9 PROVIDE NEW GUARD RAIL AT EXISTING RAISED FLOOR RAMP.
- A10 BRIDGE GALLERY ABOVE AT COLUMN LINE 'K'.
- A11 LOCATION OF NEW DOOR IN ATTIC ALONG COLUMN LINE 'M' IS APPROXIMATE. COORDINATE EXACT LOCATION WITH THE LOCATION OF EXISTING BEAM HANGERS.
- A12 INSTALL #6 DRYWALL SCREWS @ 12" O.C. ON EXISTING DRYWALL OVER BRIDGE AND 12" O.C. ON HORIZ TRACK.
- A13 R-13 BATT INSUL ON TOP OF CEILING PANELS- TYP ALL ROOMS
- A14 TEMP DUST PARTITION
- A15 INFILL EXISTING KO WALL PANEL WITH METAL PANELS TO MATCH EXISTING COLOR AND PROFILES.
- A16 FOR ENTIRE LENGTH (62 LINEAR FEET): PROVIDE PATCHING COMPOUND ON EXISTING DAMAGED VINYL GYPSUM WALL BETWEEN BRIDGE CEILING AND NEW CEILING TO HIDE ALL SCREWS, TEARS AND OTHER DAMAGE. PATCHING COMPOUND SHALL BE INSTALLED TO MAKE SMOOTH SEAMLESS SURFACE. PAINT ALL EXPOSED SURFACES.
- A17 WHERE PERIMETER INSULATION WITH VAPOR BARRIER IS MISSING OR DAMAGED, FURNISH AND INSTALL NEW INSULATION AND VAPOR BARRIER TO MATCH EXISTING.
- A18 PROVIDE SIGN THAT STATES "STORAGE FOR FOLDING PARTITION SHALL BE ON THIS SIDE ONLY".
- A19 PROVIDE SIGN THAT STATES "STORAGE OF FOLDING PARTITION PROHIBITED AT THIS END"
- A20 PROVIDE SIGN THAT STATES "NO STORAGE ALLOWED ON MEZZANINE".
- A21 INSTALL PLYWOOD SHEATHING ON THIS FACE OF WALL.
- A22 PROVIDE RETURN AIR OPENING OVER DOOR SEE MECH TO SIZE.
- A23 PROVIDE SELF-CLOSING PIPE GATE
- A24 PROVIDE RETURN AIR OPENING IN FIRE WALL STUD SPACE- SEE MECH AND STRUCTURAL.

GENERAL NOTES:

1. THE CONTRACTOR SHALL FIELD VERIFY ALL CONDITIONS PRIOR TO ANY WORK AND SHALL BE RESPONSIBLE FOR ALL WORK AND MATERIALS INCLUDING THOSE FURNISHED BY SUBCONTRACTORS.
2. ALL DIMENSIONS ON THE PLAN ARE FROM STUD SURFACE TO STUD SURFACE UNLESS OTHERWISE INDICATED.
3. IT SHALL BE THE RESPONSIBILITY OF THE CONTRACTOR TO LOCATE ALL EXISTING UTILITIES WHETHER SHOWN HEREIN OR NOT AND TO PROTECT THEM FROM DAMAGE.
4. ALL DEBRIS SHALL BE REMOVED FROM THE BUILDING AND ALL AREAS SHALL BE LEFT IN A BROOM CLEAN CONDITION AT THE END OF EACH WORK SHIFT.
5. THE CONTRACTOR IS SOLELY RESPONSIBLE FOR ALL CONSTRUCTION MEANS AND METHODS AND SHALL MAINTAIN THE STRUCTURAL INTEGRITY OF ANY CONSTRUCTION UNTIL ALL LOAD CARRYING SYSTEMS ARE COMPLETED.
6. REFER TO SHEET A504 FOR PARTITION TYPE.
7. DO NOT PROVIDE OR INSTALL GYPSUM BOARD MANUFACTURED IN CHINA.
8. CONTRACTOR SHALL PATCH ALL WALLS WHERE DEVICES HAVE BEEN REMOVED, INCLUDING BUT NOT LIMITED TO FIRE EXTINGUISHER CABINETS, AED CABINETS, LIGHT SWITCHES AND FIRE ALARM EQUIPMENT.
9. NEW METAL STUD TO EXTEND TO NEW MEZZANINE DECK. GYPSUM BOARD TO EXTEND 6" ABOVE CEILING TYP EXCEPT AT FIRE PARTITIONS AND SHEAR WALLS GYPSUM BOARD TO EXTEND TO DECK.
10. REFER TO STRUCTURAL DRAWINGS FOR METAL STUD DESIGN.
11. EXISTING PAINT ON STEEL BEAMS AND GRATING CONTAINS LEAD AND WILL NEED TO HAVE ABATEMENT PREFORMED, BY LICENSED CONTRACTOR.

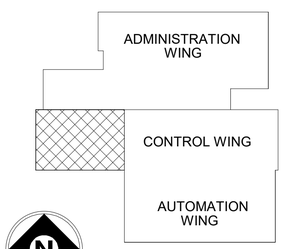

KEY PLAN

REV	APPROVED DATE	DESCRIPTION	JCN	REDLINE DATE	APVD

STATE OF UTAH
STEVEN J. PETERSON
6830295-0301
LICENSED ARCHITECT
02/04/2022

CLH ARCHITECTS ENGINEERS
Case, Lowe & Hart, Inc. 2484 Washington Blvd.
Suite 510 Ogden, Utah 84401-2346
801.399.5821 www.clhae.com

E-Corp
BUILDING A WORLD OF DIFFERENCE

DEPARTMENT OF TRANSPORTATION
FEDERAL AVIATION ADMINISTRATION
ATO - TECHNICAL OPERATIONS WESTERN SERVICE AREA

ARTCC
RECONFIGURE M1 ROOM

MAIN FLOOR PLAN

PALMDALE LOS ANGELES CTR CA

REVIEWED BY	SUBMITTED BY		APPROVED BY	
	ART GAPASIN		DARYL KITCHEN	
	PROJECT ENGINEER		MGR. ENGINEERING - LA	
	DESIGNED KDL	ISSUED BY	DATE 02.04.2021	JCN 1004394
	DRAWN KDL	ENGINEERING SERVICES ENROUTE/FSS	DRAWING NO ZLA-D-ARTCC- A101	REV
	CHECKED SJP			

19530
2/4/2022 9:03:12 AM

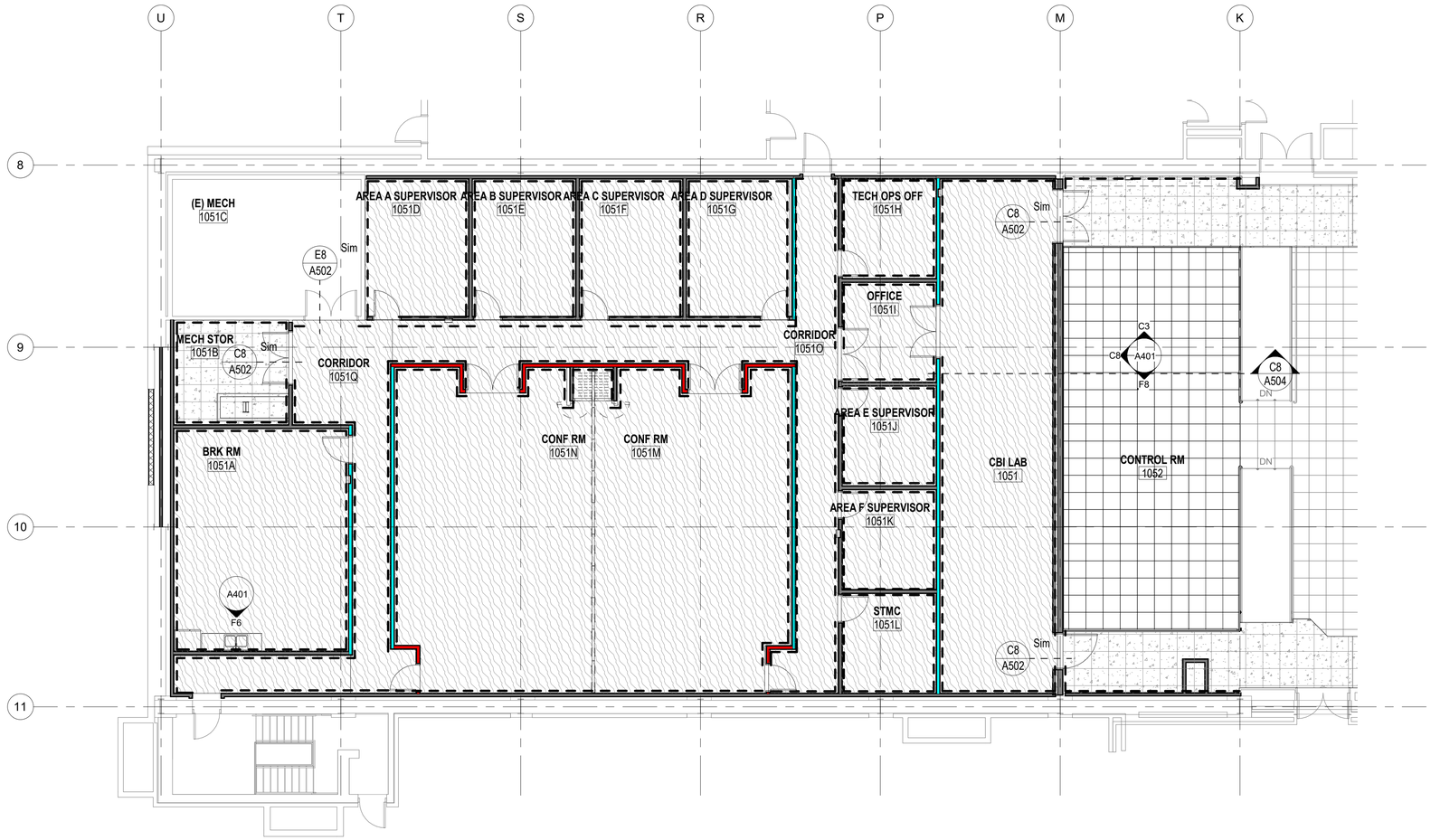

C8 MAIN FLOOR FINISH PLAN
1/8" = 1'-0"
0 4' 8' 16'

FINISHES LEGEND

- RB-1 RUBBER BASE
- EXISTING FLOORING
- VINYL COMPOSITION TILE
- RAISED FLOOR
- CPT-1 CARPET

GENERAL NOTES:

1. SEE ROOM FINISH SCHEDULE ON THIS SHEET FOR ADDITIONAL INFORMATION
2. WORK ON EAST SIDE OF DUST BARRIER WALL SHALL BE BETWEEN MIDNIGHT AND 5:30 AM PST. NOISY WORK IS FROM 2:00 AM TILL 5:00 AM. COORDINATE WITH COR.
3. MATCH NEW VINYL COMPOSITION TILE (VCT) IN NORTH CONTROL ROOM AREA WITH EXISTING VCT IN SOUTH ENTRANCE OF CONTROL ROOM. COORDINATE WITH COR.

MATERIAL FINISHES SCHEDULE

PAINT

PT-1 SHERWIN WILLIAMS- SW 7036 ACCCESSIBLE BEIGE, SATIN SHEEN, WALLS
PT-2 SHERWIN WILLIAMS- SW 7643 PUSSY WILLOW, SATIN SHEEN, WALLS
PT-3 SHERWIN WILLIAMS- SW 7612 MOUNTAIN STREAM, SATIN SHEEN, WALLS
PT-4 SHERWIN WILLIAMS- SW 7032 WARM STONE, SATIN SHEEN, WALLS

CARPET & RUBBER BASE

CPT-1 MASLAND SPEAK T503 VIBRATO #50308 AZORES 24x 24 TILE 1/4 TURN LAY
CPT-2 "HOUSTON" FROM DISCOVERY ECO SERIES BY JULIE INDUSTRIES
RB-1 ROPPE- #150 DARK GRAY, 4", INCLUDE OUTSIDE PREMOLDED CORNERS.

ACOUSTICAL WALL PANEL

AWP ACOUSTICORD TRI/KES SOURSE-ONE ACS-32 HEATHER 6'-7" WIDE INSTALL HORIZONTALLY

ACOUSTICAL CEILING TILE

ACP1 24"x 24"x 5/8" ANGLED TEGULAR, CAC=35, ARMSTRONG 816 (ANGLED TEGULAR) OR OLYMPIA MICRO CLIMAPLUS 4221 BY USG

WOOD

WD-1 NATURAL MAPLE STAIN, WOOD SATIN

SOLID SURFACE

SS-1 COLOR TO BE SELECTED IN SHOP DRAWINGS

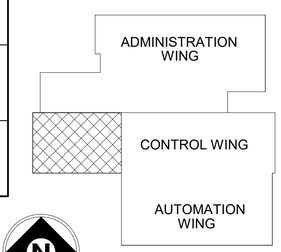

KEY PLAN

FINISH SCHEDULE

ROOM NUMBER	NAME	FLOOR NAME	WALL BASE	WALL FINISHES NORTH	WALL FINISHES WEST	WALL FINISHES SOUTH	WALL FINISHES EAST	CEILING FINISH	CEILING HEIGHT	COMMENTS
3	STAIR	-	-	-	-	-	-	-		NO WORK IN THIS AREA
1051	CBI LAB	CPT-1	RB-1	PT-2	PT-2	PT-1	PT-1	ACP-1	9' - 0"	
1051A	BRK RM	VCT-1	RB-1	PT-1	PT-2	PT-3	PT-1	ACP-1	9' - 0"	WD-1 FOR MILLWORK/SS-1 FOR COUNTERTOP
1051B	MECH STOR	CPT-1	RB-1	PT-1	PT-3	PT-1	PT-1	ACP-1	9' - 0"	
1051C	(E) MECH	-	-	-	-	-	-	-		NO WORK IN THIS AREA
1051D	AREA A SUPERVISOR	CPT-1	RB-1	PT-1	PT-1	PT-3	PT-1	ACP-1	9' - 0"	
1051E	AREA B SUPERVISOR	CPT-1	RB-1	PT-1	PT-1	PT-3	PT-1	ACP-1	9' - 0"	
1051F	AREA C SUPERVISOR	CPT-1	RB-1	PT-1	PT-1	PT-3	PT-1	ACP-1	9' - 0"	
1051G	AREA D SUPERVISOR	CPT-1	RB-1	PT-1	PT-1	PT-3	PT-1	ACP-1	9' - 0"	
1051H	TECH OPS OFF	CPT-1	RB-1	PT-1	PT-1	PT-1	PT-3	ACP-1	9' - 0"	
1051I	OFFICE	CPT-1	RB-1	PT-1	PT-1	PT-1	PT-3	ACP-1	9' - 0"	
1051J	AREA E SUPERVISOR	CPT-1	RB-1	PT-1	PT-1	PT-1	PT-3	ACP-1	9' - 0"	
1051K	AREA F SUPERVISOR	CPT-1	RB-1	PT-1	PT-1	PT-1	PT-3	ACP-1	9' - 0"	
1051L	STMC	CPT-1	RB-1	PT-3	PT-1	PT-1	PT-1	ACP-1	9' - 0"	
1051M	CONF RM	CPT-1	RB-1	PT-2	PT-1	PT-1		ACP-1	10' - 0"	PROVIDE SLIDER "IN USE / NOT IN USE" 8 ON NORTH END OF ROOM, AND 9 ON SOUTH END
1051N	CONF RM	CPT-1	RB-1	PT-2		PT-1	PT-1	ACP-1	10' - 0"	PROVIDE SLIDER "IN USE / NOT IN USE" 8 ON NORTH END OF ROOM, AND 9 ON SOUTH END
1051O	CORRIDOR	CPT-1	RB-1	PT-1	PT-2	PT-1	PT-2	ACP-1	9' - 0"	
1051P	CORRIDOR	CPT-1	RB-1	PT-2		PT-2		ACP-1	9' - 0"	
1051Q	CORRIDOR	CPT-1	RB-1	PT-2	PT-2	PT-2	PT-2	ACP-1	9' - 0"	
1051R	CORRIDOR	CPT-1	RB-1	PT-2		PT-2	PT-2	ACP-1	9' - 0"	
1052	CONTROL RM	CPT-1/VCT-1	RB-1	PT-1	AWP/PT-1	AWP/PT-1	PT-1	ACP-1	12' - 0"	
MEZZ	Room									PROVIDE (2) ONE AT WEST LADDER AND ONE AT EAST LADDER

REV	APPROVED DATE	DESCRIPTION	JCN	REDLINE DATE	APVD

STATE OF UTAH
STEVEN J. PETERSON
6830295-0301
LICENSED ARCHITECT
02/04/2022

CLH ARCHITECTS ENGINEERS
Case, Lowe & Hart, Inc. 2484 Washington Blvd. Suite 510 Ogden, Utah 84401-2346 801.399.5821 www.clhae.com

E-Corp
BUILDING A WORLD OF DIFFERENCE

DEPARTMENT OF TRANSPORTATION
FEDERAL AVIATION ADMINISTRATION
ATO - TECHNICAL OPERATIONS WESTERN SERVICE AREA

ARTCC
RECONFIGURE M1 ROOM

FINISH PLAN

PALMDALE LOS ANGELES CTR CA

REVIEWED BY	SUBMITTED BY	APPROVED BY
	ART GAPASIN	DARYL KITCHEN
	PROJECT ENGINEER	MGR. ENGINEERING - LA
	DESIGNED KDL	ISSUED BY: ENGINEERING SERVICES ENROUTE/FSS — DATE 02.04.2021 — JCN 1004394
	DRAWN KDL	DRAWING NO ZLA-D-ARTCC- A102 — REV
	CHECKED SJP	

19530
2/4/2022 9:03:15 AM

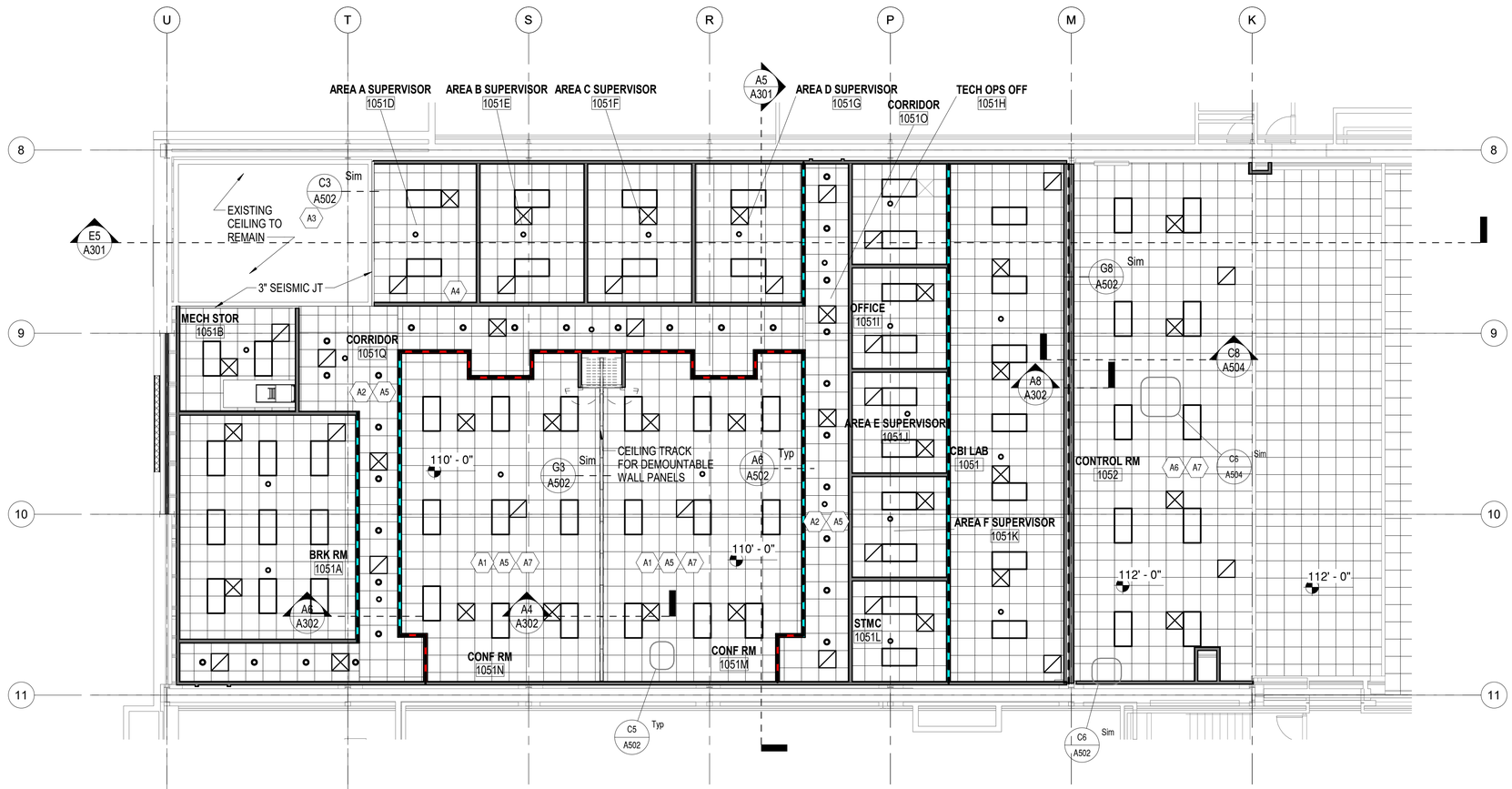

MAIN FLOOR REFLECTED CEILING PLAN

C8

1/8" = 1'-0"

0 4' 8' 16'

GENERAL NOTES

1. THE CONTRACTOR SHALL FIELD VERIFY ALL CONDITIONS PRIOR TO ANY WORK AND SHALL BE RESPONSIBLE FOR ALL WORK AND MATERIALS INCLUDING THOSE FURNISHED BY SUBCONTRACTORS.
2. THE ACOUSTICAL CEILING GRID SHALL BE BALANCED AS INDICATED ON THE DRAWING.
3. ACOUSTICAL CEILING HEIGHT SHALL BE AT 9'-0" AFF IN ALL ROOMS EXCEPT CONF RM WHICH ARE 10'-0", UNLESS NOTED OTHERWISE.
4. LOCATE CEILING MOUNTED FIXTURES, I.E. SMOKE DETECTORS, HEAT DETECTORS, DOWN LIGHTS, SPEAKERS, EXIT SIGNS, ETC. IN THE CENTER OF CEILING PANELS.
5. REFER TO SHEET A501 FOR SUSPENDED ACOUSTICAL CEILING SEISMIC RESTRAINTS.
6. MINIMUM ALLOWABLE CEILING TILE WIDTH TO BE NO LESS THAN 6".
7. PROVIDE R-13 BATT OVER ALL ACOUSTIC CEILING SYSTEMS.

SHEET KEY NOTES

- A1 ACOUSTICAL CEILING HEIGHT @ 10'-0" AFF
- A2 ACOUSTICAL CEILING @ 9'-0" A.F.F. TYPICAL UNLESS NOTED OTHERWISE.
- A3 NO WORK IN THIS AREA.
- A4 MINIMUM ALLOWABLE CEILING TILE WIDTH TO BE NO LESS THAN 4".
- A5 CENTER FULL-WIDTH ACT TILE IN ALL CORRIDORS
- A6 NEW CONTROL ROOM ACT CEILING HGT. AT 10'-6" AFF.
- A7 PROVIDE BRACING AT 12' ON CENTER EACH WAY MAXIMUM THROUGHOUT THE ROOM. COORDINATE ACTUAL LOCATION OF BRACES IN THE FIELD. COORDINATE WITH COR. SEE D8/A504 FOR TENSION OR COMPRESSION BRACES. THE CEILING SHALL NOT BE BRACED TO THE OBSERVATION BRIDGE WALL.

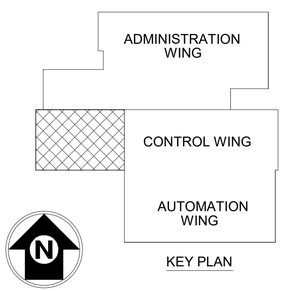

KEY PLAN

REFLECTED CEILING LEGEND

- LIGHT FIXTURE SEE ELECTRICAL SHEETS
- DIFFUSERS SEE MECHANICAL SHEETS
- DIFFUSERS SEE MECHANICAL SHEETS
- SP CEILING MOUNTED SPEAKERS SEE ELECTRICAL SHEETS
- WALLS WITH GYP. BD. EXTEND TO DECK AND SEALED

STATE OF UTAH
STEVEN J. PETERSON
6830295-0301
LICENSED ARCHITECT

02/04/2022

CLH ARCHITECTS ENGINEERS
Case, Lowe & Hart, Inc. 2484 Washington Blvd. Suite 510 Ogden, Utah 84401-2346 801.399.5821 www.clhae.com

E-Corp
BUILDING A WORLD OF DIFFERENCE

REV	APPROVED DATE	DESCRIPTION	JCN	REDLINE DATE	APVD

DEPARTMENT OF TRANSPORTATION
FEDERAL AVIATION ADMINISTRATION
ATO - TECHNICAL OPERATIONS WESTERN SERVICE AREA

ARTCC RECONFIGURE M1 ROOM

REFLECTED CEILING PLAN

PALMDALE LOS ANGELES CTR CA

REVIEWED BY	SUBMITTED BY	APPROVED BY
	ART GAPASIN	DARYL KITCHEN
	PROJECT ENGINEER	MGR. ENGINEERING - LA

DESIGNED KDL	ISSUED BY	DATE 02.04.2021	JCN 1004394
DRAWN KDL	ENGINEERING SERVICES ENROUTE/FSS	DRAWING NO ZLA-D-ARTCC- A103	REV
CHECKED SJP			

2/4/2022 9:03:18 AM 16530

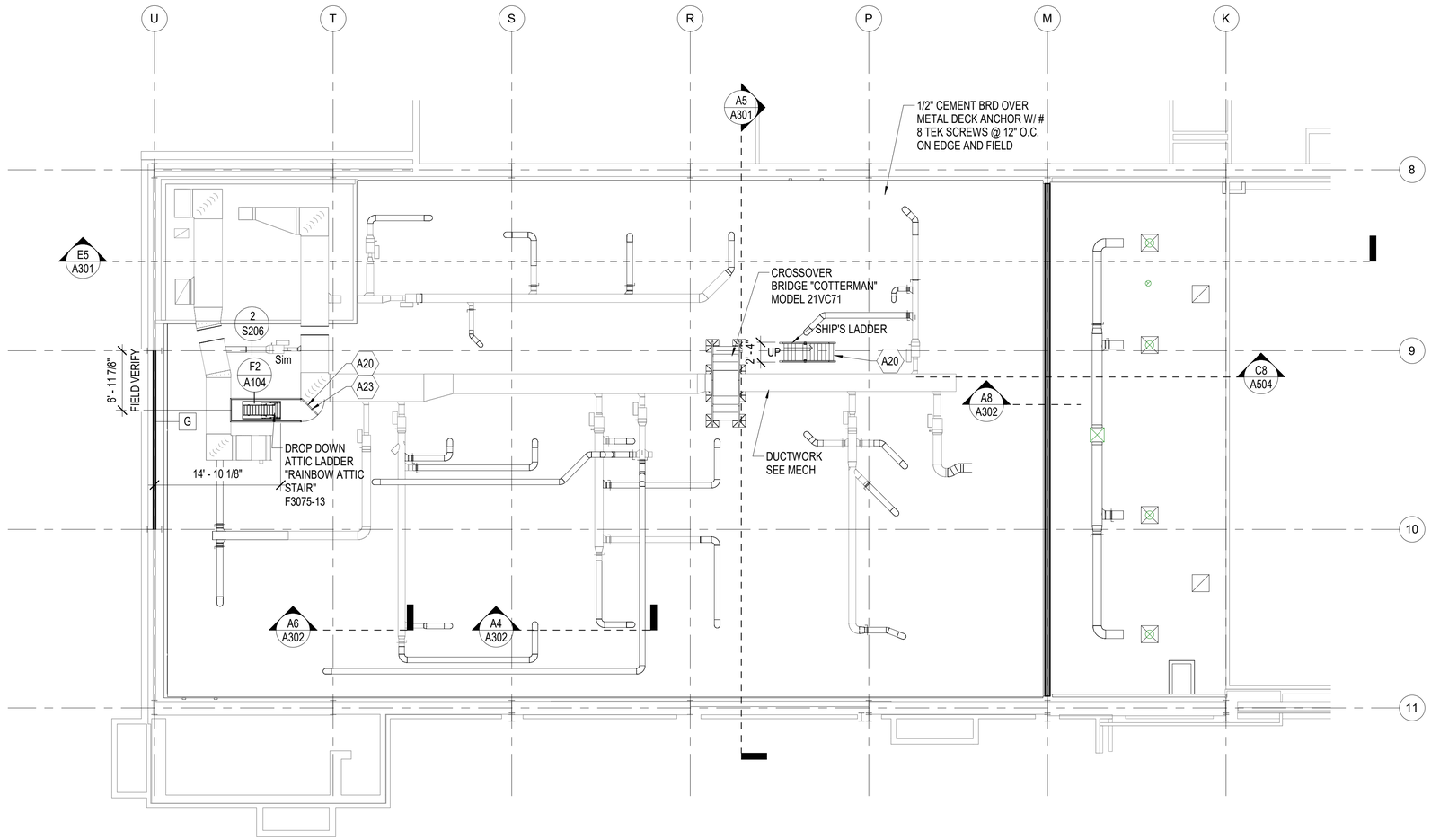

C8 MEZZANINE FLOOR PLAN
1/8" = 1'-0"
0 4' 8' 16'

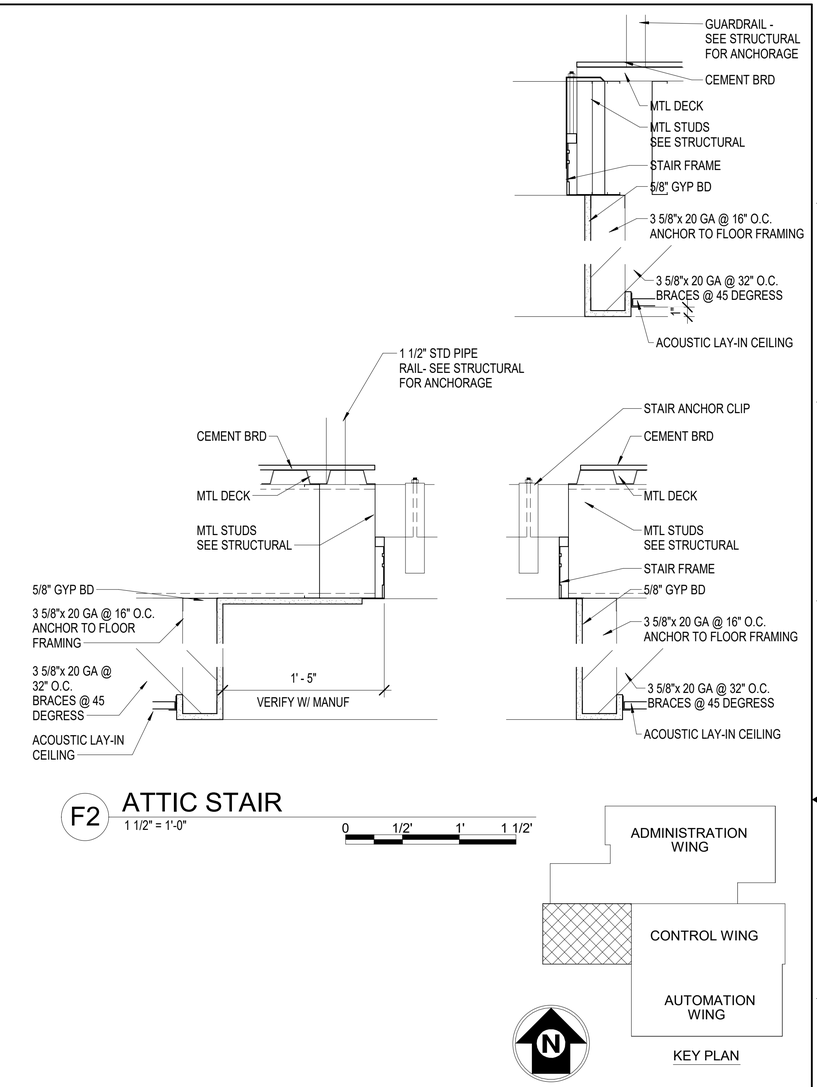

F2 ATTIC STAIR
1 1/2" = 1'-0"
0 1/2' 1' 1 1/2'

KEY PLAN

REV	APPROVED DATE	DESCRIPTION	JCN	REDLINE DATE	APVD

DEPARTMENT OF TRANSPORTATION
FEDERAL AVIATION ADMINISTRATION
ATO - TECHNICAL OPERATIONS — WESTERN SERVICE AREA

ARTCC
RECONFIGURE M1 ROOM

MEZZANINE PLAN

PALMDALE — LOS ANGELES CTR — CA

STATE OF UTAH
STEVEN J. PETERSON
6830295-0301
LICENSED ARCHITECT
02/04/2022

CLH ARCHITECTS ENGINEERS
Case, Lowe & Hart, Inc. 2484 Washington Blvd. Suite 510 Ogden, Utah 84401-2346
801.399.5821 www.clhae.com

E-Corp
BUILDING A WORLD OF DIFFERENCE

REVIEWED BY	SUBMITTED BY: ART GAPASIN, PROJECT ENGINEER		APPROVED BY: DARYL KITCHEN, MGR. ENGINEERING - LA
DESIGNED KDL	ISSUED BY	DATE 02.04.2021	JCN 1004394
DRAWN KDL	ENGINEERING SERVICES ENROUTE/FSS	DRAWING NO ZLA-D-ARTCC- A104	REV
CHECKED SJP			

19530
2/4/2022 9:03:19 AM

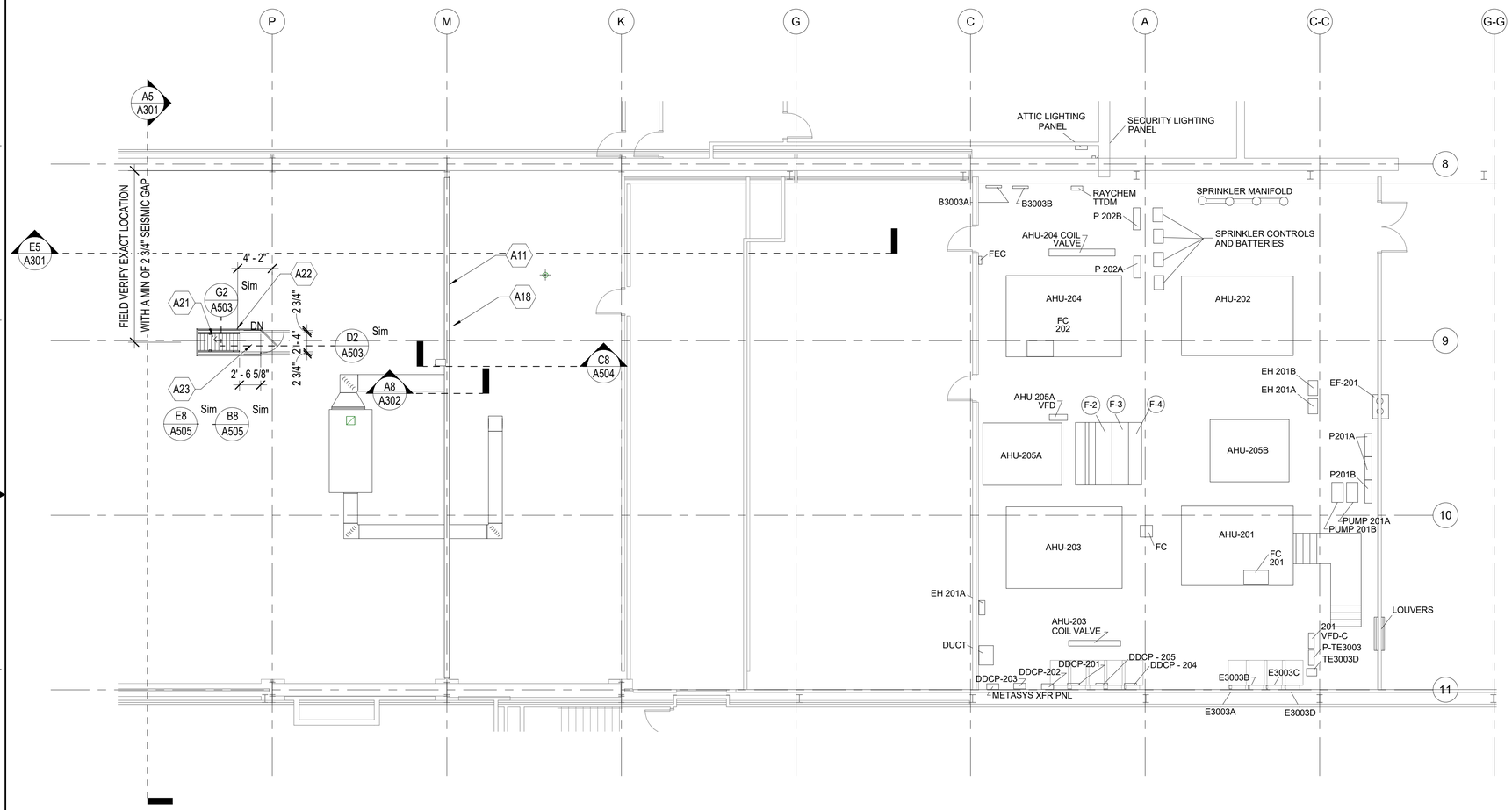

C8 PARTIAL ATTIC PLAN

1/8" = 1'-0"

0 4' 8' 16'

KEY NOTES:

- A1 PROVIDE VERTICAL CONTROL JOINTS AT 30'-0" IN NEW GWB. SEE DETAIL C7/A504, ALIGN JOINTS WITH DOOR JAMBS WHERE POSSIBLE.
- A2 PROVIDE OPERABLE (STACKABLE) PARTITION, MOUNTED TO BEAM ABOVE
- A3 SEMI-RECESSED FIRE EXTINGUISHER CABINET WITH DRY CHEMICAL FIRE EXTINGUISHER. PROVIDE BLOCKING AS REQUIRED. FIELD VERIFY EXACT LOCATION WITH PROJECT MANAGER
- A4 NEW RAISED FLOOR, SEE SPECIFICATION.
- A5 2.7" EXP JOINT BETWEEN EXISTING WALL AND NEW PARTITION.
- A6 PROVIDE HORIZONTAL BLOCKING FOR FLAT-SCREEN TV INSTALLATION (TV BY OTHERS). PROVIDE RECEPTACLE AT 48"AFF-SEE ELECTRICAL. COORDINATE EXACT LOCATION WITH COR.
- A7 NEW RAISED FLOOR SYSTEM GUARD RAILS.
- A8 EXISTING RAISED FLOOR SYSTEM & RAMPS. REMOVE (E) GUARDRAIL AND PROVIDE NEW GUARDRAIL TO MEET ABA.
- A9 PROVIDE NEW GUARD RAIL AT EXISTING RAISED FLOOR RAMP.
- A10 BRIDGE GALLERY ABOVE AT COLUMN LINE 'K'.
- A11 LOCATION OF NEW DOOR IN ATTIC ALONG COLUMN LINE 'M' IS APPROXIMATE. COORDINATE EXACT LOCATION WITH THE LOCATION OF EXISTING BEAM HANGERS.
- A12 INSTALL #6 DRYWALL SCREWS @ 12" O.C. ON EXISTING DRYWALL OVER BRIDGE AND 12" O.C. ON HORIZ TRACK.
- A13 R-13 BATT INSUL ON TOP OF CEILING PANELS- TYP ALL ROOMS
- A14 TEMP DUST PARTITION
- A15 INFILL EXISTING KO WALL PANEL WITH CONCRETE PANELS AND METAL PANELS TO MATCH EXISTING COLOR AND PROFILES.
- A16 FOR ENTIRE LENGTH (62 LINEAR FEET): PROVIDE PATCHING COMPOUND ON EXISTING DAMAGED VINYL GYPSUM WALL BETWEEN BRIDGE CEILING AND NEW CEILING TO HIDE ALL SCREWS, TEARS AND OTHER DAMAGE. PATCHING COMPOUND SHALL BE INSTALLED TO MAKE SMOOTH SEAMLESS SURFACE. PAINT ALL EXPOSED SURFACES.
- A17 WHERE PERIMETER INSULATION WITH VAPOR BARRIER IS MISSING OR DAMAGED, FURNISH AND INSTALL NEW INSULATION AND VAPOR BARRIER TO MATCH EXISTING.
- A18 PROVIDE SIGN THAT STATES "STORAGE FOR FOLDING PARTITION SHALL BE ON THIS SIDE ONLY".
- A19 PROVIDE SIGN THAT STATES "STORAGE OF FOLDING PARTITION PROHIBITED AT THIS END"
- A20 PROVIDE SIGN THAT STATES "NO STORAGE ALLOWED ON MEZZANINE".
- A21 NEW SHIPP'S LADDER, SEE STRUCTURAL FOR ADDITION STEEL FRAMING FOR NEW OPENING.
- A22 NEW PIPE GUARDRAIL, REMOVE EXISTING GRATING AS REQUIRED TO WELD NEW PIPE VERTICALS TO BEAMS.
- A23 NEW 42" PIPE GATE WITH STOP AND SPRING HINGES

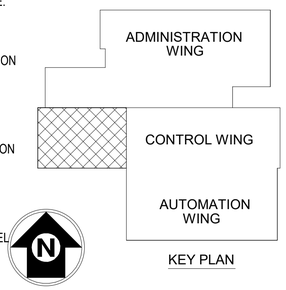

KEY PLAN

REV	APPROVED DATE	DESCRIPTION	JCN	REDLINE DATE	APVD

DEPARTMENT OF TRANSPORTATION
FEDERAL AVIATION ADMINISTRATION
ATO - TECHNICAL OPERATIONS — WESTERN SERVICE AREA

ARTCC RECONFIGURE M1 ROOM

PARTIAL ATTIC PLAN

PALMDALE — LOS ANGELES CTR — CA

STATE OF UTAH — STEVEN J. PETERSON 6830295-0301 — LICENSED ARCHITECT

02/04/2022

CLH ARCHITECTS ENGINEERS
Case, Lowe & Hart, Inc. 2484 Washington Blvd. Suite 510 Ogden, Utah 84401-2346 801.399.5821 www.clhac.com

E-Corp — BUILDING A WORLD OF DIFFERENCE

REVIEWED BY	SUBMITTED BY	APPROVED BY
	ART GAPASIN	DARYL KITCHEN
	PROJECT ENGINEER	MGR. ENGINEERING - LA

DESIGNED	KDL	ISSUED BY	DATE 02.04.2021 JCN 1004394
DRAWN	KDL	ENGINEERING SERVICES ENROUTE/FSS	DRAWING NO ZLA-D-ARTCC- A105 REV
CHECKED	SJP		

19530
2/4/2022 9:03:20 AM

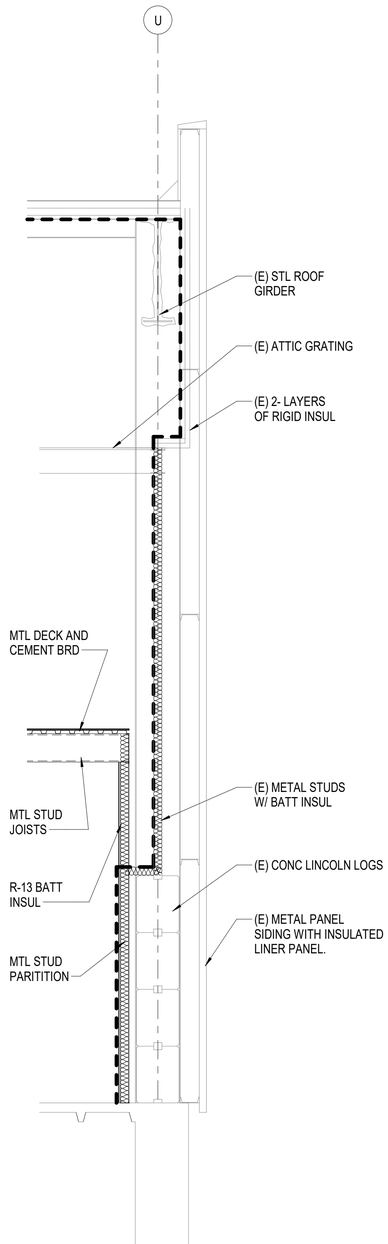

GRID U -EXISTING EXTERIOR CONDITION

A8 WALL DETAIL AT GRID U
3/8" = 1'-0"
0 2' 4' 6'

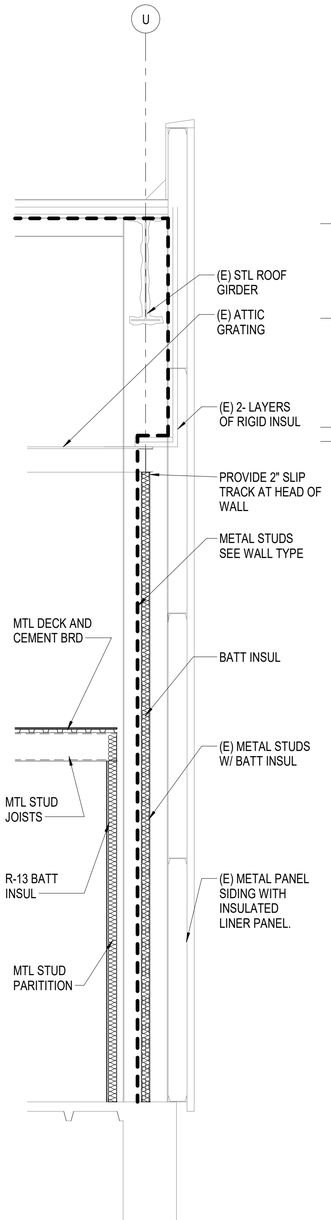

GRID U AT KNOCK OUT

A7 WALL DETAIL AT GRID U AT KO
3/8" = 1'-0"
0 2' 4' 6'

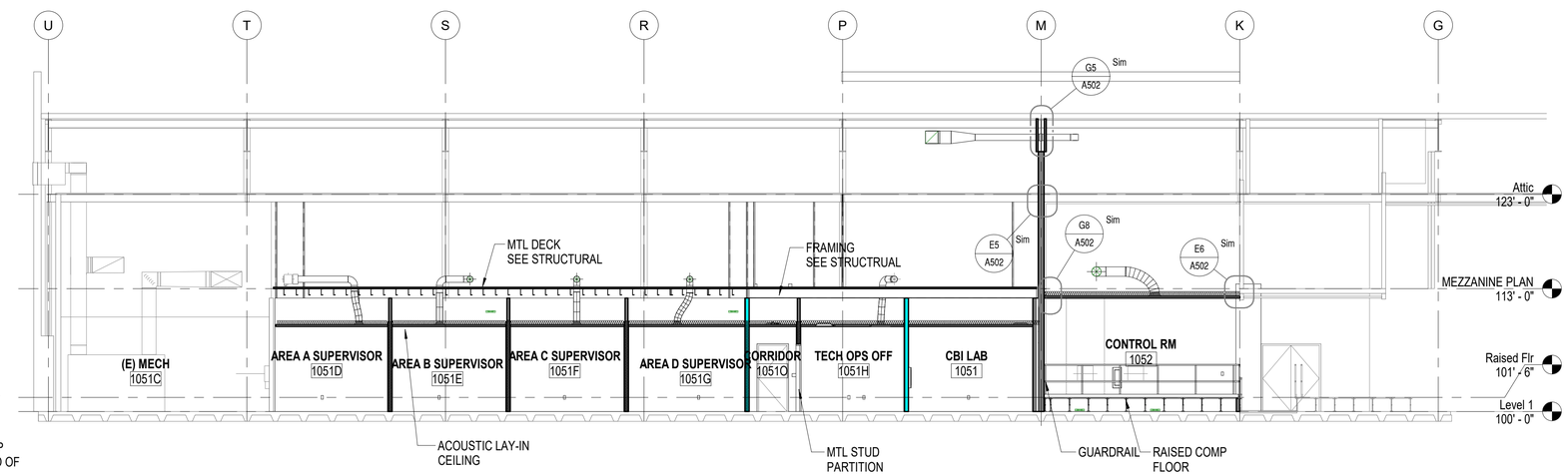

E5 BUILDING SECTION
1/8" = 1'-0"
0 4' 8' 16'

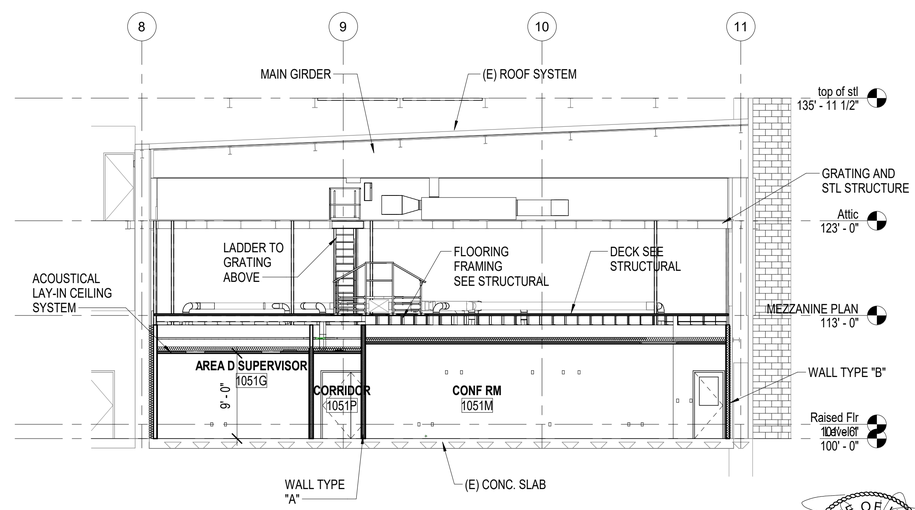

A5 BUILDING SECTION
1/8" = 1'-0"
0 4' 8' 16'

STATE OF UTAH
STEVEN J. PETERSON
6830295-0301
LICENSED ARCHITECT
02/04/2022

CLH ARCHITECTS ENGINEERS
Case, Lowe & Hart, Inc. 2484 Washington Blvd. Suite 510 Ogden, Utah 84401-2346
801.399.5821 www.clhae.com

E-Corp
BUILDING A WORLD OF DIFFERENCE

REV	APPROVED DATE	DESCRIPTION	JCN	REDLINE DATE	APVD

DEPARTMENT OF TRANSPORTATION
FEDERAL AVIATION ADMINISTRATION
ATO - TECHNICAL OPERATIONS — WESTERN SERVICE AREA

ARTCC RECONFIGURE M1 ROOM

BUILDING SECTIONS

PALMDALE — LOS ANGELES CTR — CA

REVIEWED BY	SUBMITTED BY: ART GAPASIN, PROJECT ENGINEER	APPROVED BY: DARYL KITCHEN, MGR. ENGINEERING - LA
DESIGNED KDL	ISSUED BY: ENGINEERING SERVICES ENROUTE/FSS	DATE 02.04.2021 — JCN 1004394
DRAWN KDL		DRAWING NO ZLA-D-ARTCC- A301 — REV
CHECKED SJP		

2/4/2022 9:03:23 AM 19530

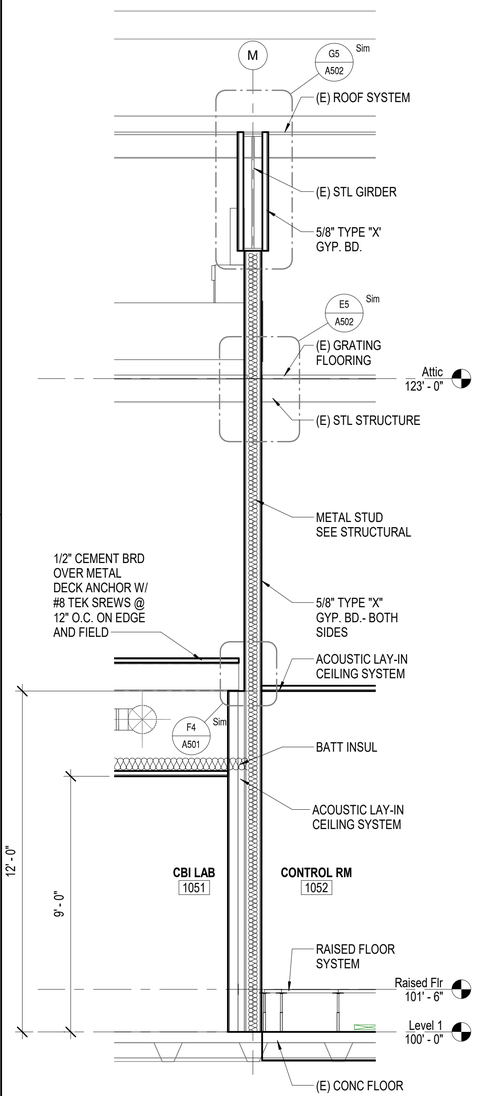

A8 WALL SECTION
3/8" = 1'-0"

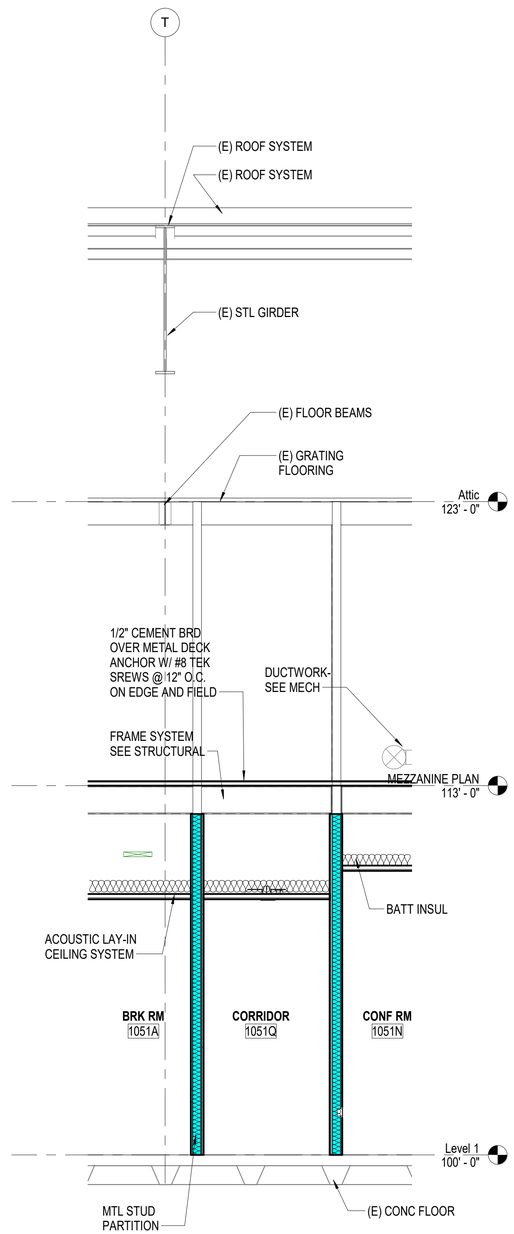

A6 WALL SECTION
3/8" = 1'-0"

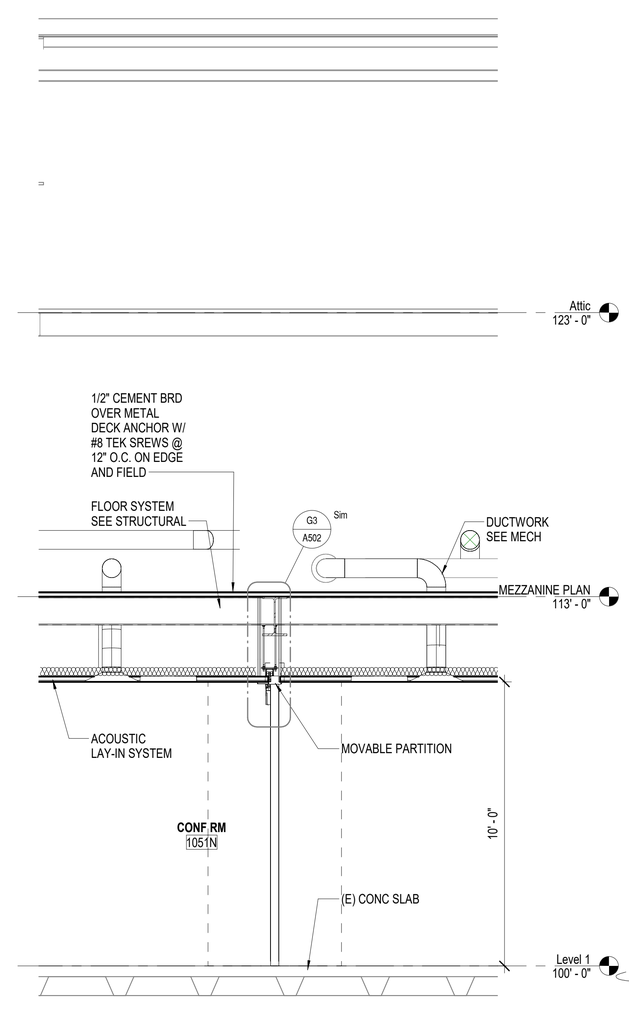

A4 WALL SECTION
3/8" = 1'-0"

STATE OF UTAH
STEVEN J. PETERSON
6830295-0301
LICENSED ARCHITECT
02/04/2022

CLH ARCHITECTS ENGINEERS
Case, Lowe & Hart, Inc. 2484 Washington Blvd.
Suite 510 Ogden, Utah 84401-2346
801.399.5821 www.clhac.com

E-Corp
BUILDING A WORLD OF DIFFERENCE

REV	APPROVED DATE	DESCRIPTION	JCN	REDLINE DATE	APVD

DEPARTMENT OF TRANSPORTATION
FEDERAL AVIATION ADMINISTRATION
ATO - TECHNICAL OPERATIONS WESTERN SERVICE AREA

ARTCC
RECONFIGURE M1 ROOM

SECTIONS

PALMDALE LOS ANGELES CTR CA

REVIEWED BY	SUBMITTED BY: ART GAPASIN, PROJECT ENGINEER	APPROVED BY: DARYL KITCHEN, MGR. ENGINEERING - LA
DESIGNED KDL	ISSUED BY: ENGINEERING SERVICES ENROUTE/FSS	DATE 02.04.2021 JCN 1004394
DRAWN KDL		DRAWING NO ZLA-D-ARTCC- A302 REV
CHECKED SJP		

16530
2/4/2022 9:03:24 AM

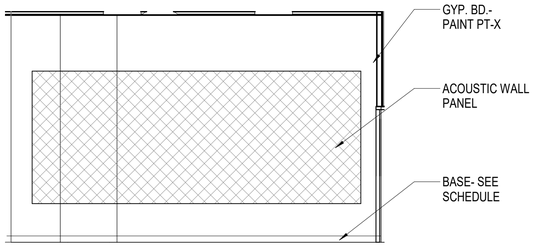

F8 INTERIOR ELEVATION
1/4" = 1'-0"
0 2' 4' 8'

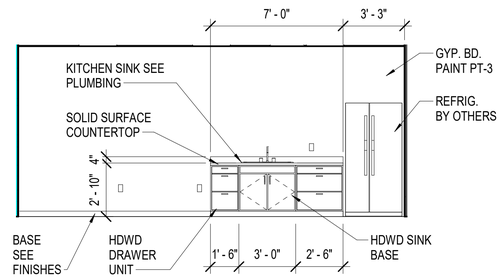

F6 INTERIOR ELEVATION
1/4" = 1'-0"
0 2' 4' 8'

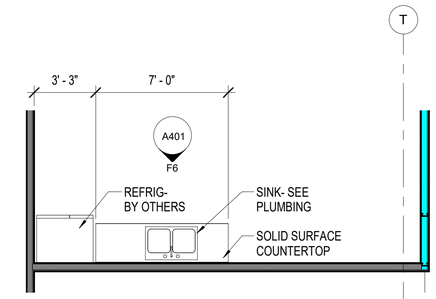

F3 ENLARGED BREAK AREA PLAN
1/4" = 1'-0"
0 2' 4' 8'

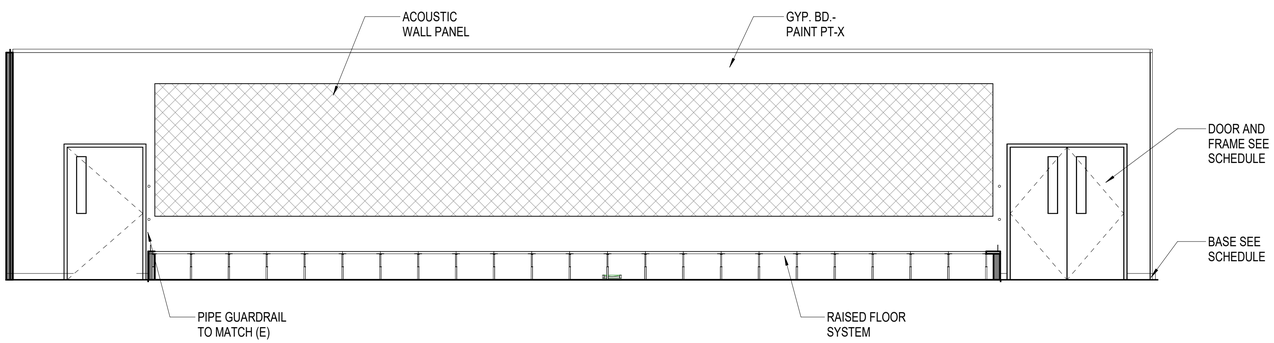

C8 INTERIOR ELEVATION
1/4" = 1'-0"
0 2' 4' 8'

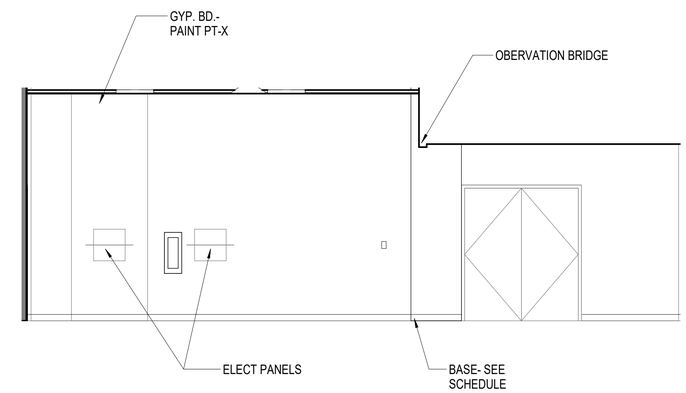

C3 INTERIOR ELEVATION
1/4" = 1'-0"
0 2' 4' 8'

REV	APPROVED DATE	DESCRIPTION	JCN	REDLINE DATE	APVD

DEPARTMENT OF TRANSPORTATION
FEDERAL AVIATION ADMINISTRATION
ATO - TECHNICAL OPERATIONS WESTERN SERVICE AREA

ARTCC
RECONFIGURE M1 ROOM

ENLARGED PLAN AND ELEVATIONS

PALMDALE LOS ANGELES CTR CA

STATE OF UTAH
STEVEN J. PETERSON
6830295-0301
LICENSED ARCHITECT
02/04/2022

CLH ARCHITECTS ENGINEERS
Case, Lowe & Hart, Inc. 2484 Washington Blvd.
Suite 510 Ogden, Utah 84401-2346
801.399.5821 www.clhae.com

E-Corp
BUILDING A WORLD OF DIFFERENCE

REVIEWED BY	SUBMITTED BY	APPROVED BY
	ART GAPASIN	DARYL KITCHEN
	PROJECT ENGINEER	MGR. ENGINEERING - LA
	DESIGNED KDL	ISSUED BY: ENGINEERING SERVICES ENROUTE/FSS
	DRAWN KDL	DATE 02.04.2021 JCN 1004394
	CHECKED SJP	DRAWING NO ZLA-D-ARTCC- A401 REV

2/4/2022 9:03:25 AM 18930

SIGN SCHEDULE

ROOM NUMBER	SIGN WORDS	SIGN TYPE	COMMENTS
3	STAIR NO. 3	7,5	NO WORK IN THIS AREA
1051	1051 M1 ROOM	4,5	
1051A	1051A BREAK ROOM	4	WD-1 FOR MILLWORK/SS-1 FOR COUNTERTOP
1051B	1051B MECHANICAL STORAGE	1	
1051C	1051C MECHANICAL ROOM	4,6	NO WORK IN THIS AREA
1051D	1051D AREA A SUPERVISOR	1	
1051E	1051E AREA B SUPERVISOR	1	
1051F	1051F AREA C SUPERVISOR	1	
1051G	1051G AREA D SUPERVISOR	1	
1051H	1051H TECH OPS OFFICE	1	
1051I	1051I OFFICE	1	
1051J	1051J AREA E SUPERVISOR	1	
1051K	1051K AREA F SUPERVISOR	1	
1051L	1051L STMC	1	
1051M	1051M CONFERENCE ROOM	3,8,9	PROVIDE SLIDER "IN USE / NOT IN USE" 8 ON NORTH END OF ROOM, AND 9 ON SOUTH END
1051N	1051N CONFERENCE ROOM	3,8,9	PROVIDE SLIDER "IN USE / NOT IN USE" 8 ON NORTH END OF ROOM, AND 9 ON SOUTH END
1051O	NA		
1051P	NA		
1051Q	NA		
1051R	NA		
1052	NA		
MEZZ	NO STORAGE OR STAGGING OF COMBUSTIBULES IN ALLOWED	8	PROVIDE (2) ONE AT WEST LADDER AND ONE AT EAST LADDER

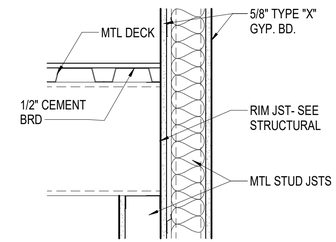

F4 FIRE WALL AT DECK
1 1/2" = 1'-0"

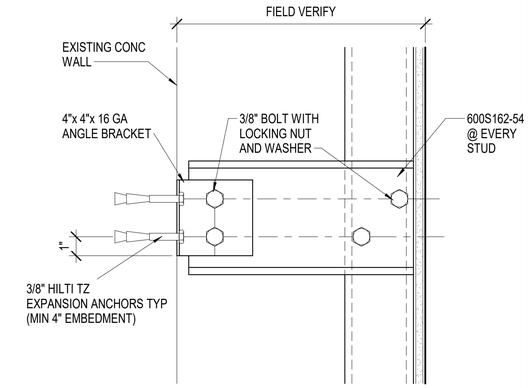

F2 WALL BRACE
3" = 1'-0"

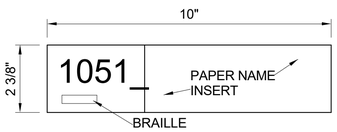

TYPE 1 - APCO AC114

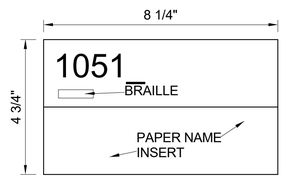

TYPE 2 - APCO AC170

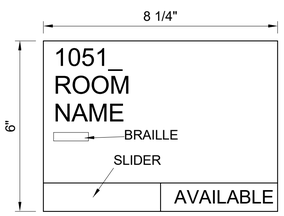

TYPE 3 - APCO AC126

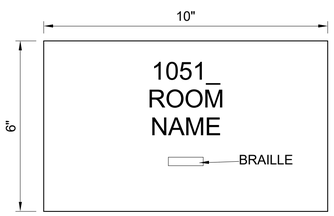

TYPE 4 - APCO AC169

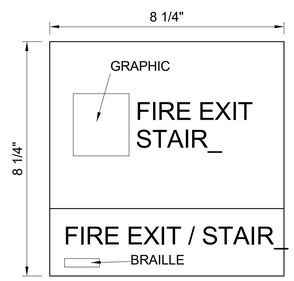

TYPE 7 - APCO AC136

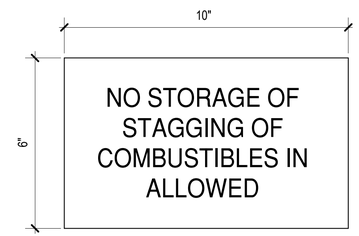

TYPE 8

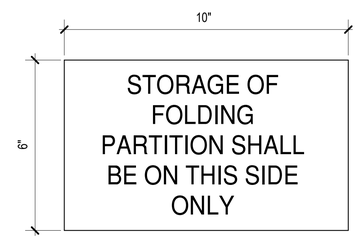

TYPE 9

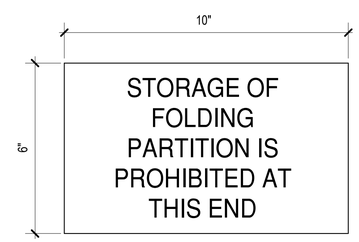

TYPE 10

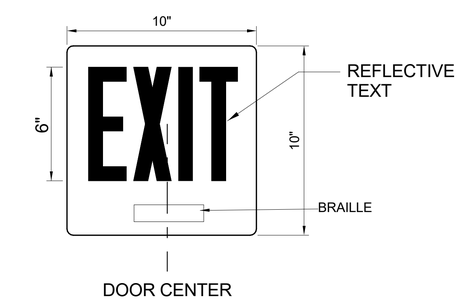

TYPE 5

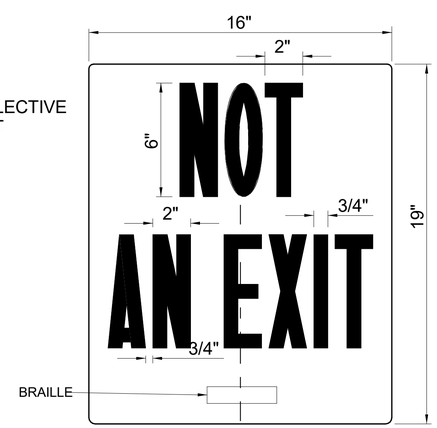

TYPE 6

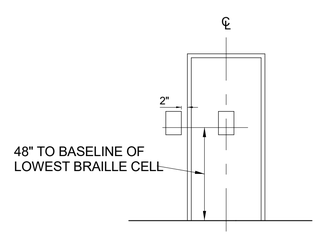

ROOM SIGNAGE MOUNTING HEIGHTS
SCALE: NTS.

A8 SIGNS
NTS

STATE OF UTAH
STEVEN J. PETERSON
6830295-0301
LICENSED ARCHITECT
02/04/2022

CLH ARCHITECTS ENGINEERS
Case, Lowe & Hart, Inc. 2484 Washington Blvd. Suite 510 Ogden, Utah 84401-2346 801.399.5821 www.clhae.com

E-Corp
BUILDING A WORLD OF DIFFERENCE

REV	APPROVED DATE	DESCRIPTION	JCN	REDLINE DATE	APVD

DEPARTMENT OF TRANSPORTATION
FEDERAL AVIATION ADMINISTRATION
ATO - TECHNICAL OPERATIONS — WESTERN SERVICE AREA

ARTCC
RECONFIGURE M1 ROOM

DETAILS

PALMDALE — LOS ANGELES CTR — CA

REVIEWED BY	SUBMITTED BY: ART GAPASIN, PROJECT ENGINEER	APPROVED BY: DARYL KITCHEN, MGR. ENGINEERING - LA
DESIGNED KDL	ISSUED BY: ENGINEERING SERVICES ENROUTE/FSS	DATE 02.04.2021 — JCN 1004394
DRAWN KDL		DRAWING NO ZLA-D-ARTCC- A501 — REV
CHECKED SJP		

2/4/2022 9:03:26 AM 18530

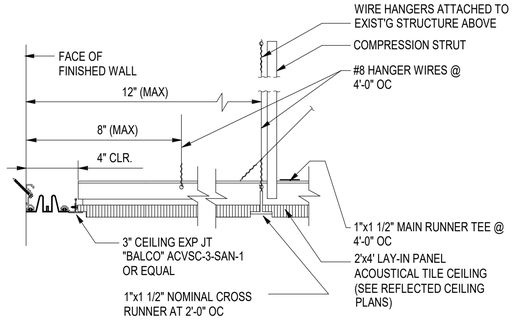

G8 SUSENDED ACOUSTICAL CLG @ GRID M
NTS

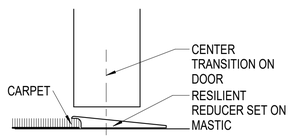

E8 FLOOR TRANSITION- CARPET/SLAB
6" = 1'-0"
0 1" 2" 3" 4"

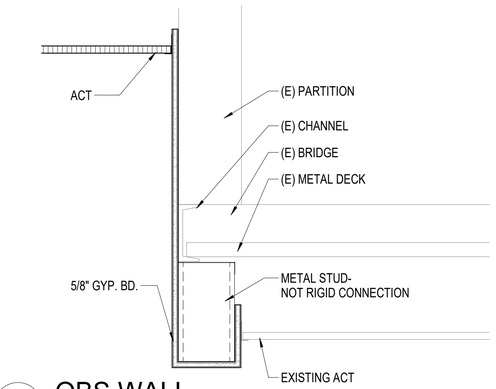

E6 OBS WALL
1 1/2" = 1'-0"
0 1/2' 1' 1 1/2'

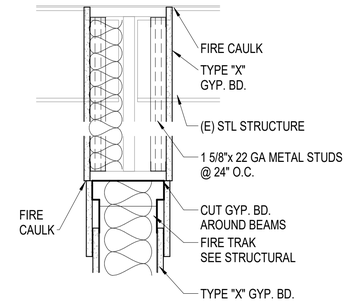

G5 GIRDER STUD WRAP
1 1/2" = 1'-0"
0 1/2' 1' 1 1/2'

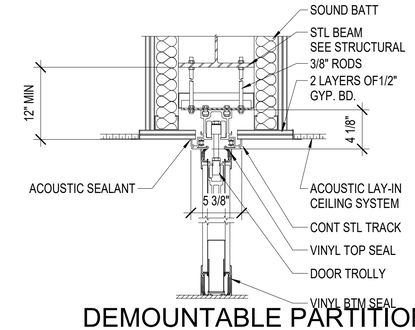

G3 DEMOUNTABLE PARTITION HEAD
1 1/2" = 1'-0"
0 1/2' 1' 1 1/2'

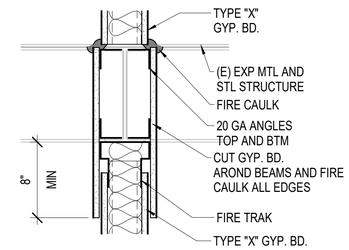

E5 FIRE WALL AT GRATING
1 1/2" = 1'-0"
0 1/2' 1' 1 1/2'

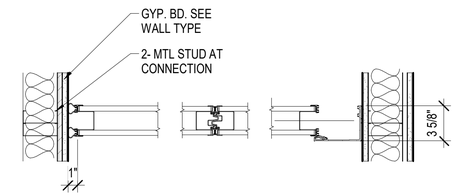

E3 DEMOUNTABLE PARTITION JAMB
1 1/2" = 1'-0"
0 1/2' 1' 1 1/2'

C8 FLOOR TRANSITION- VCT/CARPET
6" = 1'-0"
0 1" 2" 3" 4"

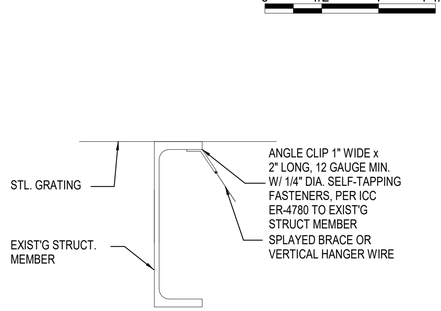

C6 HANGER WIRE ATTACHMENT
NTS

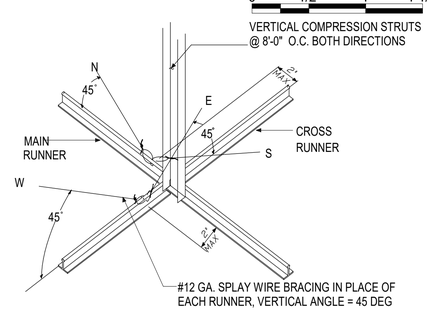

C5 TYPICAL SWAY BRACE
NTS

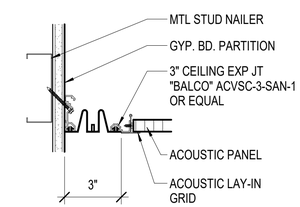

C3 EXP JT IN CLG TO WALL
3" = 1'-0"
0 3" 6" 9"

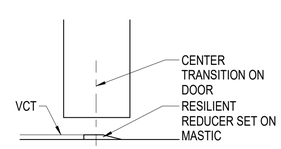

A8 FLOOR TRANSITION- VCT/SLAB
6" = 1'-0"
0 1" 2" 3" 4"

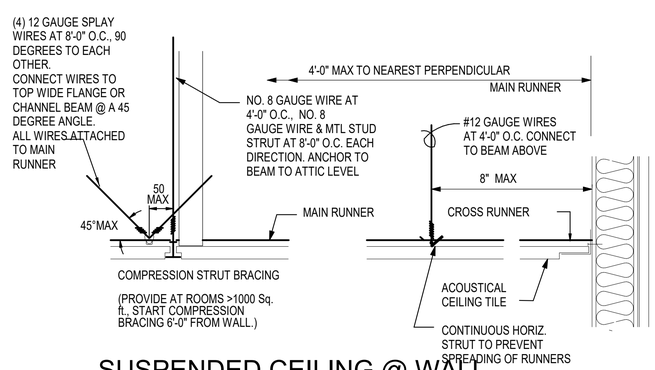

A6 SUSPENDED CEILING @ WALL BRACE SYSTEM
NTS

REV	APPROVED DATE	DESCRIPTION	JCN	REDLINE DATE	APVD

STATE OF UTAH
STEVEN J. PETERSON
6830295-0301
LICENSED ARCHITECT
02/04/2022

CLH ARCHITECTS ENGINEERS
Case, Lowe & Hart, Inc. 2484 Washington Blvd. Suite 510 Ogden, Utah 84401-2346 801.399.5821 www.clhac.com

E-Corp
BUILDING A WORLD OF DIFFERENCE

DEPARTMENT OF TRANSPORTATION
FEDERAL AVIATION ADMINISTRATION
ATO - TECHNICAL OPERATIONS WESTERN SERVICE AREA

ARTCC
RECONFIGURE M1 ROOM

DETAILS

PALMDALE LOS ANGELES CTR CA

REVIEWED BY	SUBMITTED BY	APPROVED BY
	ART GAPASIN	DARYL KITCHEN
	PROJECT ENGINEER	MGR. ENGINEERING - LA

DESIGNED	KDL	ISSUED BY	ENGINEERING SERVICES ENROUTE/FSS
DRAWN	KDL		
CHECKED	SJP		

DATE 02.04.2021 JCN 1004394
DRAWING NO ZLA-D-ARTCC- A502 REV

16930
2/4/2022 9:03:27 AM

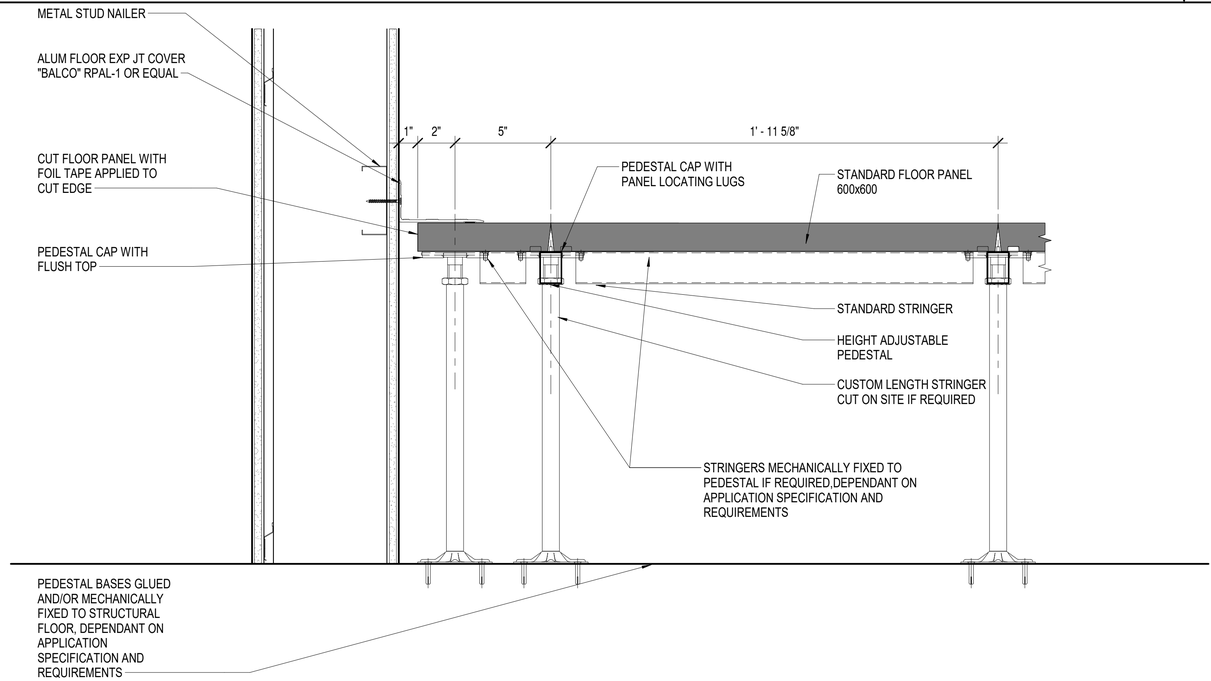

STRINGERS SHOWN ARE AN OPTIONAL REQUIREMENT DEPENDANT ON FLOOR HEIGHT AND LOADING

E8 COMPUTER FLOOR
3" = 1'-0"

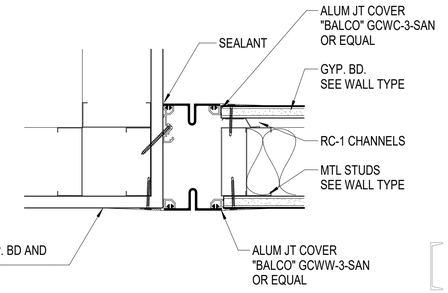

G4 SEISMIC JT AT MECH RM
3" = 1'-0"

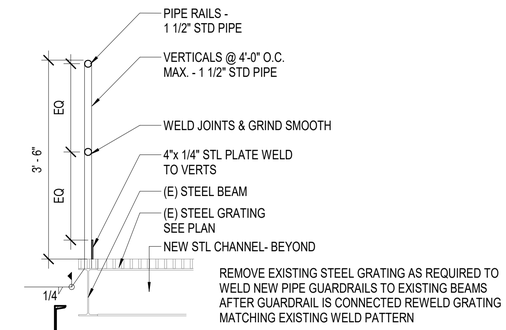

G2 PIPE GUARDRAIL
3/4" = 1'-0"

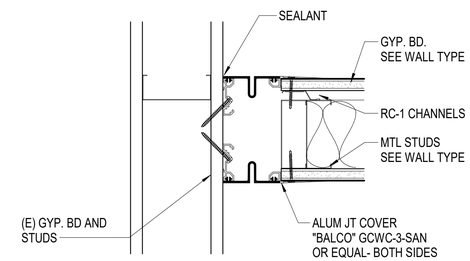

E4 SEISMIC JT AT MECH RM 1
3" = 1'-0"

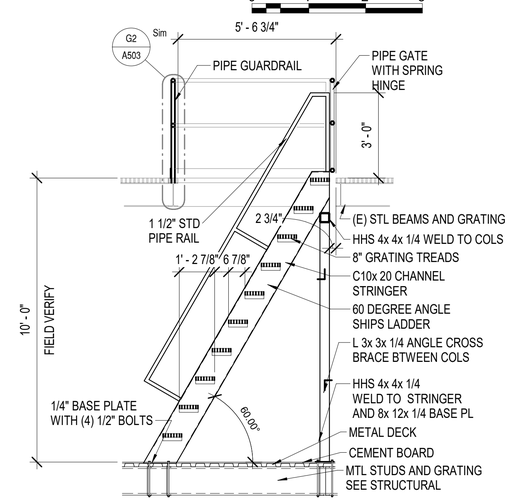

NOTE: SEE STRUCTURAL FOR ADDITION INFORMATION ON STRUCTURE

D2 SHIP'S LADDER
3/8" = 1'-0"

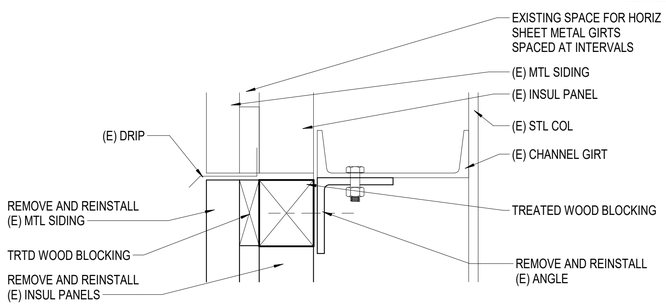

C8 OK HEAD
3" = 1'-0"

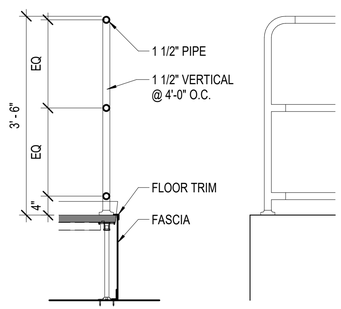

NOTE: ALL MATERIAL AND PROFILES TO MATCH EXISTING RAIL

C6 GUARDRAIL AT COMP FLOOR
3/4" = 1'-0"

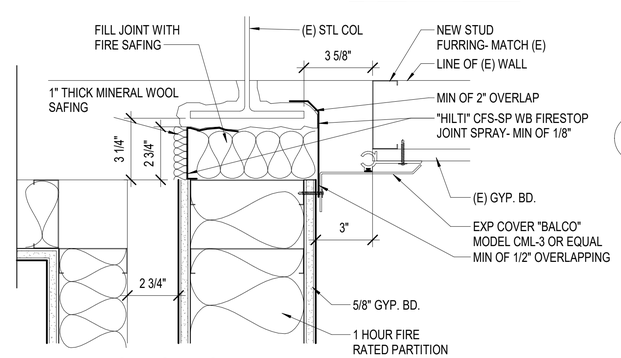

C4 SEISMIC JT AT M8
3" = 1'-0"

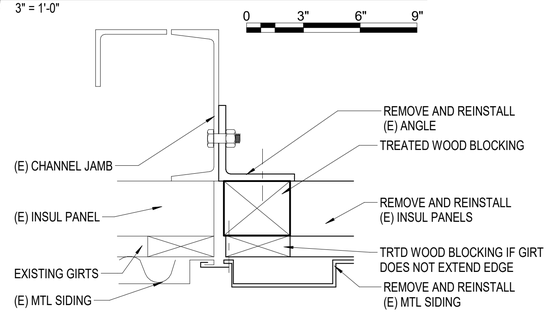

A8 OK JAMB
3" = 1'-0"

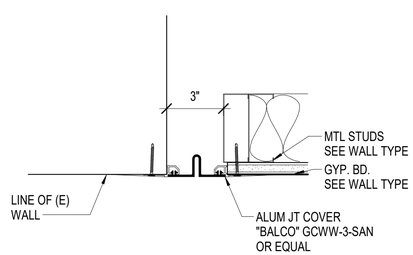

A6 SEISMIC JT AT DOOR
3" = 1'-0"

REV	APPROVED DATE	DESCRIPTION	JCN	REDLINE DATE	APVD

DEPARTMENT OF TRANSPORTATION
FEDERAL AVIATION ADMINISTRATION
ATO - TECHNICAL OPERATIONS — WESTERN SERVICE AREA

ARTCC
RECONFIGURE M1 ROOM
DETAILS

STATE OF UTAH — STEVEN J. PETERSON 6830295-0301 — LICENSED ARCHITECT
02/04/2022

CLH ARCHITECTS ENGINEERS
Case, Lowe & Hart, Inc. 2484 Washington Blvd. Suite 510 Ogden, Utah 84401-2346 801.399.5821 www.clhae.com

E-Corp — BUILDING A WORLD OF DIFFERENCE

PALMDALE — LOS ANGELES CTR — CA

REVIEWED BY	SUBMITTED BY: ART GAPASIN, PROJECT ENGINEER	APPROVED BY: DARYL KITCHEN, MGR. ENGINEERING - LA
DESIGNED KDL	ISSUED BY: ENGINEERING SERVICES ENROUTE/FSS	DATE 02.04.2021 — JCN 1004394
DRAWN KDL		DRAWING NO ZLA-D-ARTCC- A503 — REV
CHECKED SJP		

19530
2/4/2022 9:03:28 AM

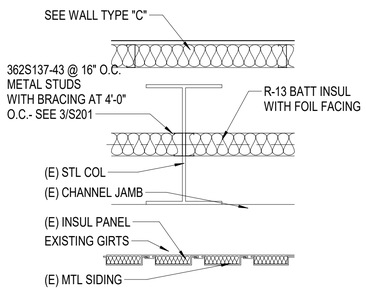

G8 WALL TYPE "G"
1" = 1'-0"

0 1/2' 1' 2'

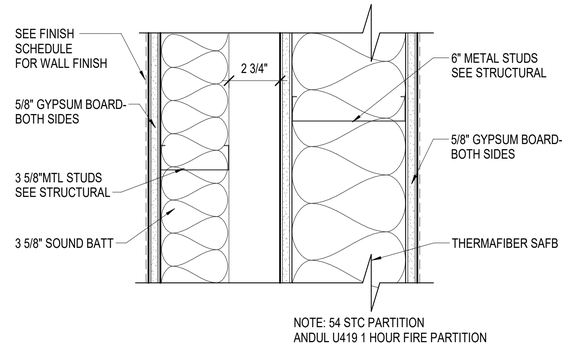

G6 WALL TYPE "F"
3" = 1'-0"

0 3" 6" 9"

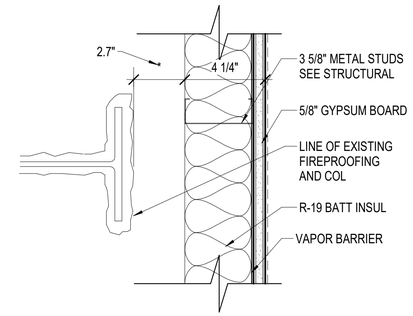

G4 WALL TYPE "C"
3" = 1'-0"

0 3" 6" 9"

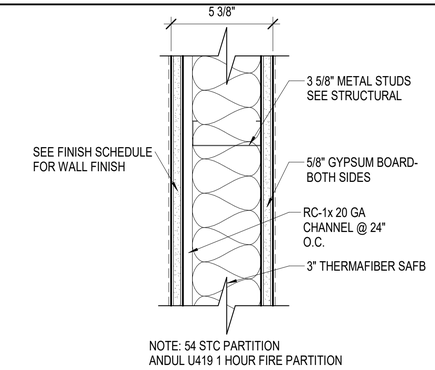

G2 WALL TYPE "A"
3" = 1'-0"

0 3" 6" 9"

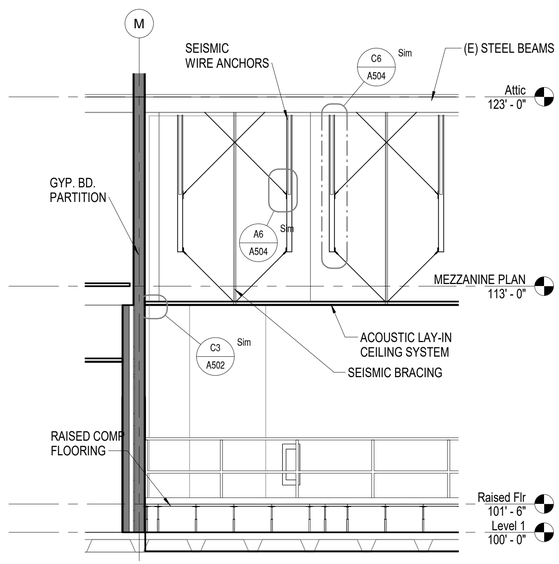

C8 CEILING BRACING DETAIL
1/4" = 1'-0"

0 2' 4' 8'

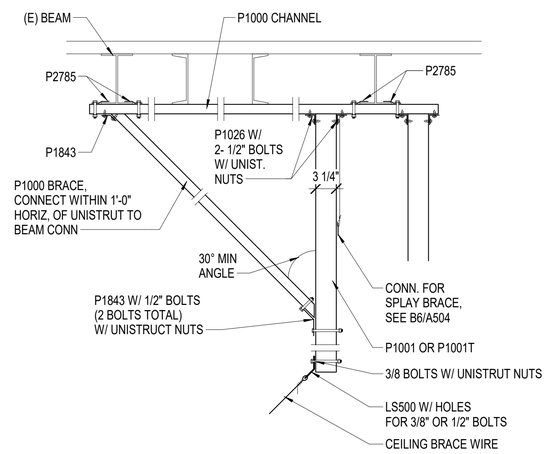

C6 LINE 8 OR LINE 11 DETAIL
1" = 1'-0"

0 1/2' 1' 2'

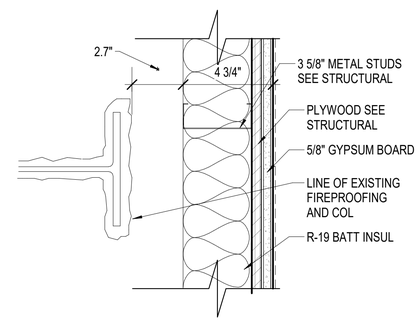

D4 WALL TYPE "D"
3" = 1'-0"

0 3" 6" 9"

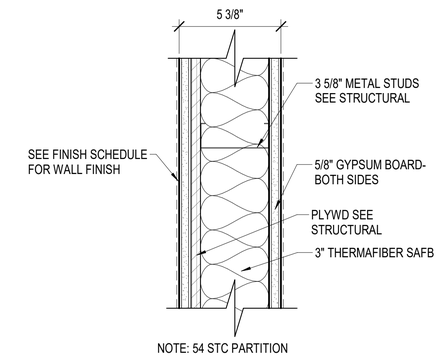

D2 WALL TYPE "B"
3" = 1'-0"

0 3" 6" 9"

NOTE: REFER TO STRUCTURAL DRAWINGS FOR BRACING, BLOCKING, ANCHORAGE INFORMATION, ETC FOR ALL METAL STUDS

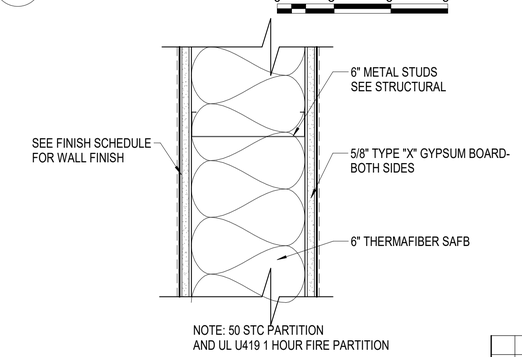

B4 WALL TYPE "E"
3" = 1'-0"

0 3" 6" 9"

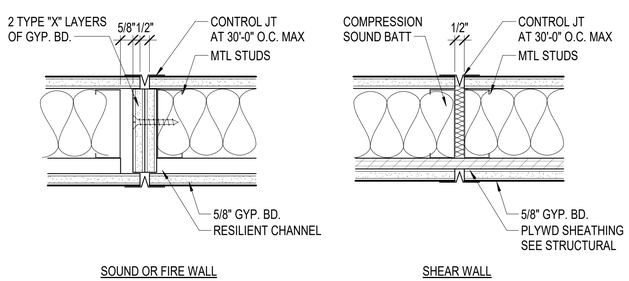

A8 GYP. BD. CONTROL JT
3" = 1'-0"

0 3" 6" 9"

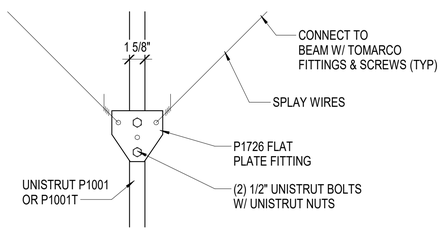

A6 SPLAY WIRE DETAIL
1 1/2" = 1'-0"

0 1/2' 1' 1 1/2'

REV	APPROVED DATE	DESCRIPTION	JCN	REDLINE DATE	APVD

STATE OF UTAH
STEVEN J. PETERSON
6830295-0301
LICENSED ARCHITECT
02/04/2022

DEPARTMENT OF TRANSPORTATION
FEDERAL AVIATION ADMINISTRATION
ATO - TECHNICAL OPERATIONS — WESTERN SERVICE AREA

ARTCC
RECONFIGURE M1 ROOM
WALL TYPES AND DETAILS

PALMDALE — LOS ANGELES CTR — CA

CLH ARCHITECTS ENGINEERS
Case, Lowe & Hart, Inc. 2484 Washington Blvd. Suite 510 Ogden, Utah 84401-2346 801.399.5821 www.clhae.com

E-Corp
BUILDING A WORLD OF DIFFERENCE

REVIEWED BY	SUBMITTED BY	APPROVED BY
	ART GAPASIN	DARYL KITCHEN
	PROJECT ENGINEER	MGR. ENGINEERING - LA

DESIGNED	KDL	ISSUED BY	DATE 02.04.2021	JCN 1004394
DRAWN	KDL	ENGINEERING SERVICES ENROUTE/FSS	DRAWING NO ZLA-D-ARTCC- A504	REV
CHECKED	SJP			

2/4/2022 9:03:29 AM
18530

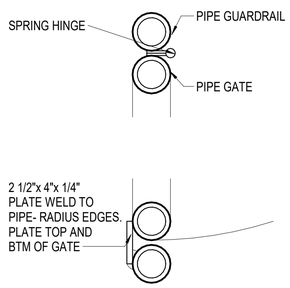

E8 PIPE GATE
3" = 1'-0"

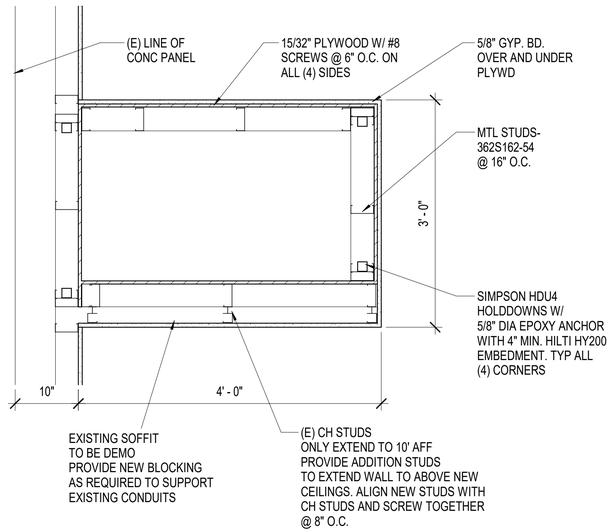

E6 SOUTH WALL CHASE
1" = 1'-0"

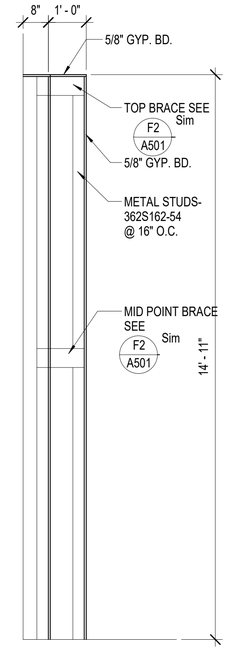

E4 NORTH WALL CHASE SECTION
1/2" = 1'-0"

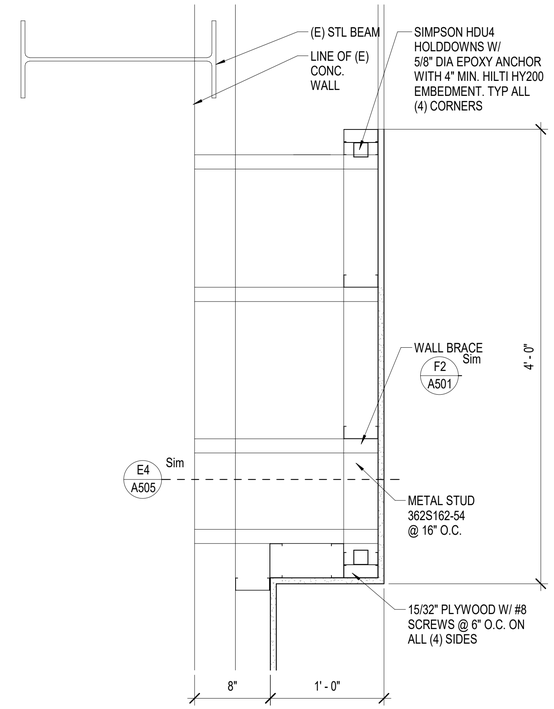

E2 NORTH WALL CHASE
1 1/2" = 1'-0"

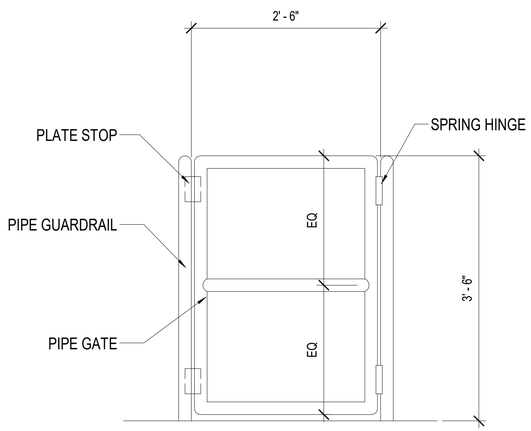

B8 GATE ELEVATION
1" = 1'-0"

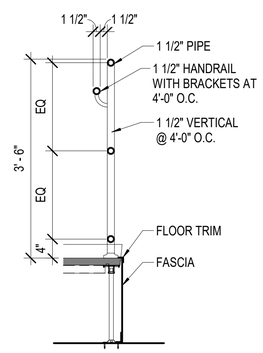

NOTE: ALL MATERIAL AND
PROFILES TO MATCH EXISTING RAIL

B6 GUARDRAIL AT COMP FLOOR WITH HANDRAIL
3/4" = 1'-0"

REV	APPROVED DATE	DESCRIPTION	JCN	REDLINE DATE	APVD

STATE OF UTAH
STEVEN J. PETERSON
6830295-0301
LICENSED ARCHITECT
02/04/2022

CLH ARCHITECTS ENGINEERS
Case, Lowe & Hart, Inc. 2484 Washington Blvd.
Suite 510 Ogden, Utah 84401-2346
801.399.5821 www.clhac.com

E-Corp
BUILDING A WORLD OF DIFFERENCE

DEPARTMENT OF TRANSPORTATION
FEDERAL AVIATION ADMINISTRATION
ATO - TECHNICAL OPERATIONS WESTERN SERVICE AREA

ARTCC
RECONFIGURE M1 ROOM

DETAILS

PALMDALE LOS ANGELES CTR CA

REVIEWED BY

SUBMITTED BY: ART GAPASIN, PROJECT ENGINEER
APPROVED BY: DARYL KITCHEN, MGR. ENGINEERING - LA

DESIGNED Designer
DRAWN Author
CHECKED Checker
ISSUED BY ENGINEERING SERVICES ENROUTE/FSS
DATE 02.04.2021
JCN 1004394
DRAWING NO ZLA-D-ARTCC- A505
REV

16530
2/4/2022 9:03:30 AM

DOOR SCHEDULE

DOOR NUMBER	TYPE	DOOR MATERIAL	DOOR WIDTH	DOOR HEIGHT	DOOR THICKNESS	TOTAL DOOR WIDTH	FRAME TYPE	FRAME MATERIAL	DETAILS HEAD	DETAILS JAMB	DETAILS THRESHOLD	GLAZING	HARDWARE GROUP	FIRE RATING	STC RATING	COMMENTS
51 A	N	HM	4' - 0"	7' - 0"	1 3/4"	3'-0"	G1	HM	D8/A601	D7/A601		60 GLASS	SEE SPECS	60 MIN	45	
51 B	N	HM	3' - 0"	7' - 0"	1 3/4"	6'-0"	G2	HM	D8/A601	D7/A601		60 GLASS	SEE SPECS	60 MIN	45	PAIR OF HM DOORS
51A A	N	WD	3' - 0"	7' - 0"	1 3/4"	3'-0"	G1	HM	F2/A601	E2/A601	-	TEMP	SEE SPECS	-	45	
51B A	F	WD	3' - 0"	7' - 0"	1 3/4"	6'-0"	G2	HM	C5/A601	A5/A601	-	-	SEE SPECS	-	-	PAIR OF WOOD DOORS
51D A	F	WD	3' - 0"	7' - 0"	1 3/4"	3'-0"	G1	HM	C5/A601	A5/A601	-		SEE SPECS	-	45	
51E A	F	WD	3' - 0"	7' - 0"	1 3/4"	3'-0"	G1	HM	C5/A601	A5/A601	-		SEE SPECS	-	45	
51F A	F	WD	3' - 0"	7' - 0"	1 3/4"	3'-0"	G1	HM	C5/A601	A5/A601	-		SEE SPECS	-	45	
51G A	F	WD	3' - 0"	7' - 0"	1 3/4"	3'-0"	G1	HM	C5/A601	A5/A601	-		SEE SPECS	-	45	
51H A	F	WD	3' - 0"	7' - 0"	1 3/4"	3'-0"	G1	HM	C5/A601	A5/A601	-		SEE SPECS	-	45	
51I A	F	WD	3' - 0"	7' - 0"	1 3/4"	6'-0"	G2	HM	C5/A601	A5/A601	-		SEE SPECS	-	45	PAIR OF WOOD DOORS
51I B	F	WD	3' - 0"	7' - 0"	1 3/4"	6'-0"	G2	HM	F2/A601	E2/A601	-		SEE SPECS	-	45	LOCKS ONLY NO HANDLES, PAIR OF WOOD DOORS
51J A	F	WD	3' - 0"	7' - 0"	1 3/4"	3'-0"	G1	HM	C5/A601	A5/A601	-		SEE SPECS	-	45	
51K A	F	WD	3' - 0"	7' - 0"	1 3/4"	3'-0"	G1	HM	C5/A601	A5/A601	-		SEE SPECS	-	45	
51L A	F	WD	3' - 0"	7' - 0"	1 3/4"	3'-0"	G1	HM	C5/A601	A5/A601	-		SEE SPECS	-	45	
51M A	N	WD	3' - 0"	7' - 0"	1 3/4"	6'-0"	G2	HM	C5/A601	A5/A601	-	FIRELITE	SEE SPECS	20 MIN	49	PAIR OF WOOD DOORS
51M B	N	WD	3' - 0"	7' - 0"	1 3/4"	3'-0"	G1	HM	C5/A601	A5/A601	-	FIRELITE	SEE SPECS	20 MIN	49	
51N A	N	WD	3' - 0"	7' - 0"	1 3/4"	6'-0"	G2	HM	C5/A601	A5/A601	-	FIRELITE	SEE SPECS	20 min	49	PAIR OF WOOD DOORS
51N B	N	WD	3' - 0"	7' - 0"	1 3/4"	3'-0"	G1	HM	C5/A601	A5/A601	-	FIRELITE	SEE SPECS	20 MIN	49	

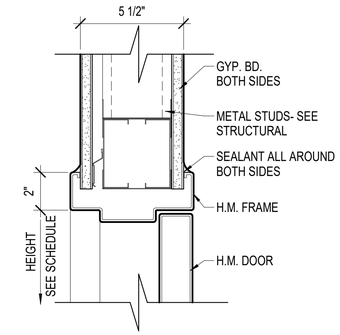

F3 DOOR HEAD- MTL STUDS
3" = 1'-0"

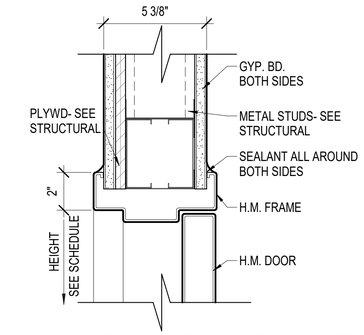

F2 DOOR HEAD- SHEAR MTL STUDS
3" = 1'-0"

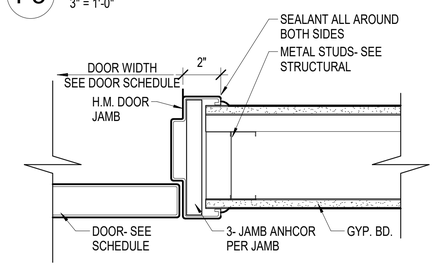

E3 DOOR JAMB- MTL STUDS
3" = 1'-0"

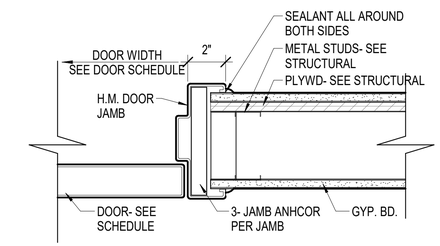

E2 DOOR JAMB- SHEAR MTL STUDS
3" = 1'-0"

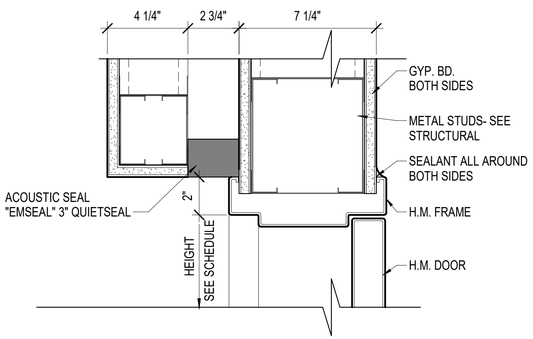

D8 DOOR HEAD- GRID M
3" = 1'-0"

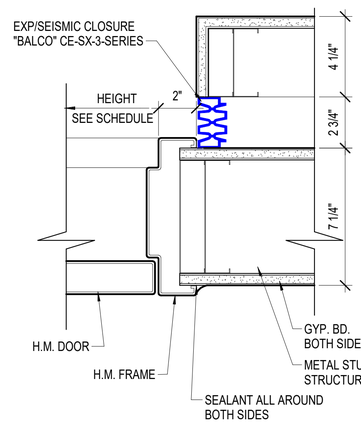

D7 DOOR JAMB- GRID M
3" = 1'-0"

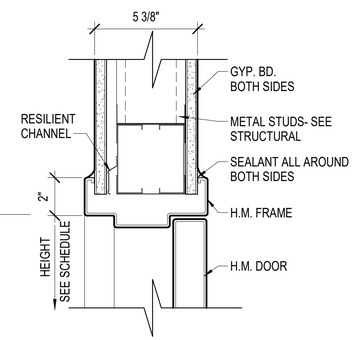

C5 DOOR HEAD- SOUND MTL STUDS
3" = 1'-0"

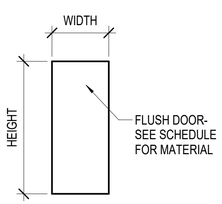

DOOR TYPE F

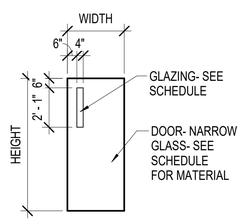

DOOR TYPE N

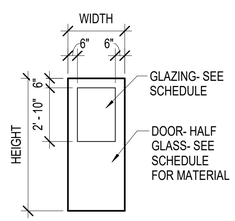

DOOR TYPE G

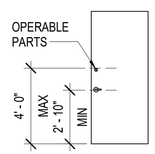

ADA MOUNTING HEIGHT

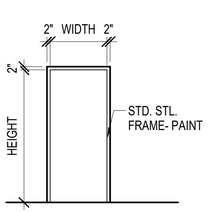

FRAME TYPE G1

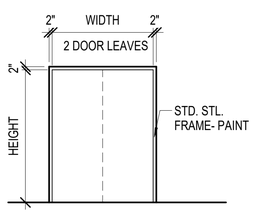

FRAME TYPE G2

C8 DOOR AND FRAME TYPES
1/4" = 1'-0"

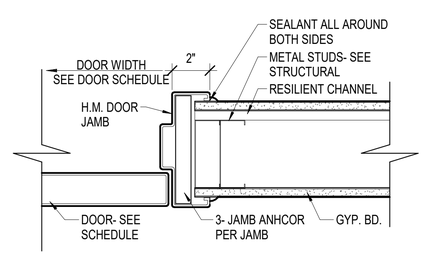

A5 DOOR JAMB- SOUND MTL STUDS
3" = 1'-0"

REV	APPROVED DATE	DESCRIPTION	JCN	REDLINE DATE	APVD

DEPARTMENT OF TRANSPORTATION
FEDERAL AVIATION ADMINISTRATION
ATO - TECHNICAL OPERATIONS — WESTERN SERVICE AREA

STATE OF UTAH — STEVEN J. PETERSON 6830295-0301 — LICENSED ARCHITECT
02/04/2022

CLH ARCHITECTS ENGINEERS
Case, Lowe & Hart, Inc. 2484 Washington Blvd. Suite 510 Ogden, Utah 84401-2346 801.399.5821 www.clhac.com

E-Corp
BUILDING A WORLD OF DIFFERENCE

ARTCC
RECONFIGURE M1 ROOM

DOOR SCHEDULE AND TYPES

PALMDALE — LOS ANGELES CTR — CA

REVIEWED BY	SUBMITTED BY: ART GAPASIN, PROJECT ENGINEER	APPROVED BY: DARYL KITCHEN, MGR. ENGINEERING - LA
DESIGNED KDL	ISSUED BY: ENGINEERING SERVICES ENROUTE/FSS	DATE 02.04.2021 — JCN 1004394
DRAWN KDL		DRAWING NO ZLA-D-ARTCC- A601 — REV
CHECKED SJP		

19530
2/4/2022 9:03:31 AM

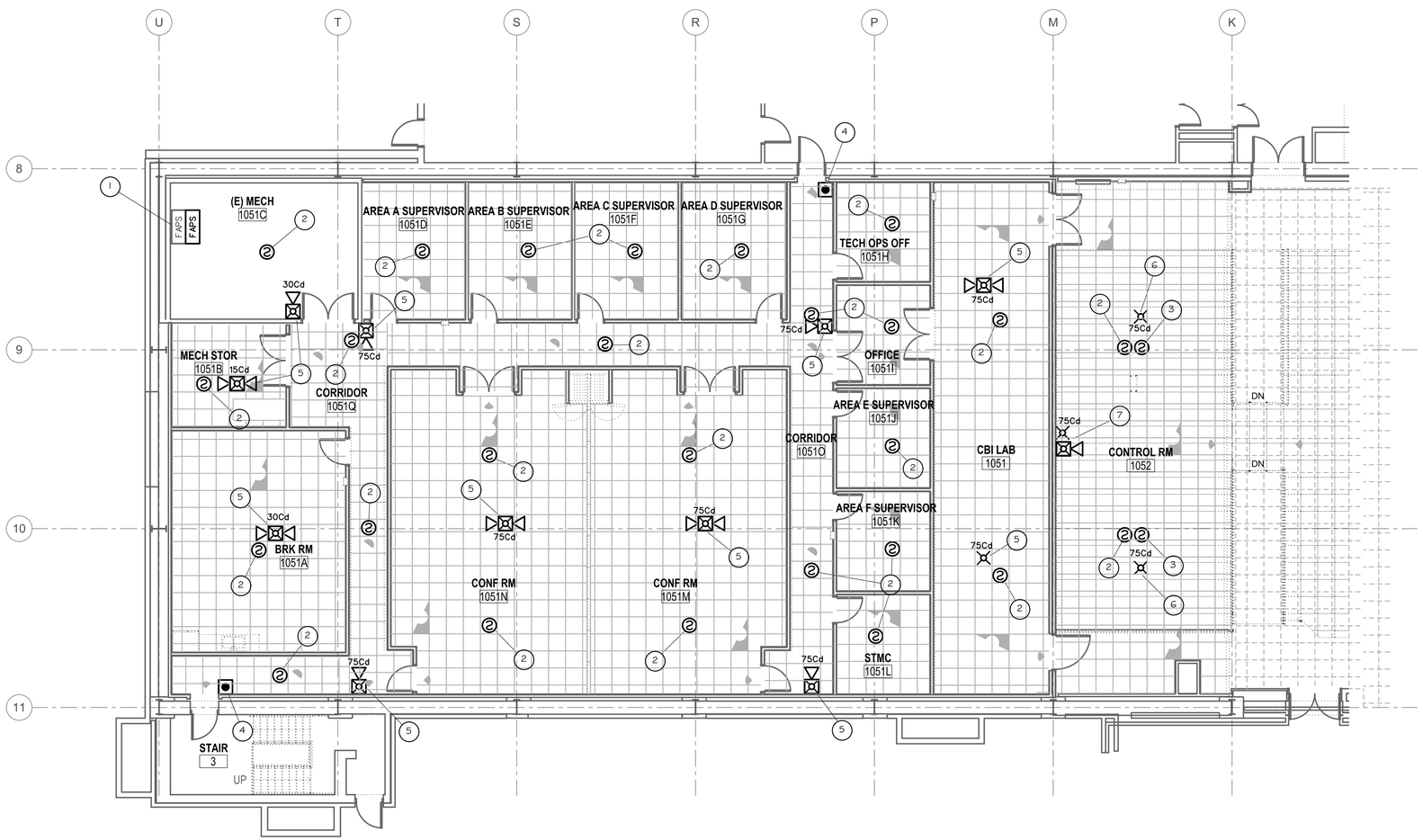

1 FIRE ALARM PLAN - MAIN FLOOR

1/8" = 1'-0"

0 4' 8' 16'

FIRE ALARM GEN NOTES

1. SCOPE OF WORK: WORK SHALL INCLUDE REMODEL/EXPANSION OF EXISTING FIRE ALARM SYSTEM THROUGHOUT TENANT IMPROVEMENT AREA. DESIGN AND INSTALLATION OF FIRE ALARM SYSTEM SHALL COMPLY WITH ALL APPLICABLE PROVISIONS OF NFPA 72 AND FAA STANDARDS.
2. APPLICABLE CODES AND STANDARDS:
   A.INTERNATIONAL BUILDING CODE 2018 EDITION
   B.NFPA 70 2018 EDITION
   C.NFPA 72 2016 EDITION
   D. FAA FIRE LIFE SAFETY TECHNICAL IMPLEMENTATION GUIDANCE, 2017
3. QUALITY ASSURANCE: ALL NEW EQUIPMENT, MATERIAL AND DEVICES USED FOR THE FIRE ALARM SYSTEM EXPANSION SHALL BE UL LISTED AND/OR FM APPROVED FOR USE IN FIRE PROTECTION SYSTEMS. ALL INITIATING DEVICES SHALL BE LISTED COMPATIBLE WITH THE EXISTING FIRE ALARM CONTROL PANEL (FACP).
4. SUBMITTALS: FIRE ALARM SYSTEM CONTRACTOR SHALL PREPARE AND SUBMIT SHOP DRAWINGS TO ALL AUTHORITIES HAVING JURISDICTION FOR REVIEW/APPROVAL PRIOR TO ORDERING OR INSTALLING ANY EQUIPMENT. SUBMITTALS SHALL CONFORM TO THE CONSTRUCTION DOCUMENTS REQUIREMENTS OF NFPA 72.
5. SYSTEM TYPE: FIRE ALARM SYSTEM SHALL MEET THE REQUIREMENTS FOR PROTECTED PREMISE FIRE ALARM SYSTEMS. SYSTEM PROVIDES OFF-PREMISE NOTIFICATION OF STATUS TO OFF-PREMISE FIRE ALARM RECEIVING STATION. FIRE ALARM SYSTEM SHALL TRANSMIT FIRE ALARM SIGNALS (WATER FLOW SWITCHES, MANUAL PULL STATIONS, WET CHEMICAL SYSTEM ACTIVATION AND SMOKE DETECTOR), SUPERVISORY SIGNALS (VALVE TAMPER SWITCHES AND DUCT SMOKE DETECTORS) AND TROUBLE SIGNALS TO OFF-PREMISE FIRE ALARM RECEIVING STATION VIA EXISTING TRANSMISSION METHOD
6. WIRING/CONDUIT: ALL WIRING TO NEW. WIRING SHALL BE FREE OF OPENS, SHORTS AND GROUNDS. ALL WIRING SHALL BE INSTALLED IN RIGID, EMT OR FLEXIBLE CONDUIT. ALL PENETRATIONS THROUGH RATED PARTITIONS SHALL BE FIRE STOPPED WITH A SUITABLE CAULKING COMPOUND. ALL WIRING USED IN THE FIRE ALARM SYSTEM SHALL BE FPL (FIRE POWER LIMITED) WITH 300V INSULATION OR EQUIVALENT AS PER NFPA 70 ARTICLE 760.
7. WIRING STYLES (PER NFPA 72): INITIATING DEVICE CIRCUITS SHALL MEET THE REQUIREMENTS FOR CLASS A STYLE D. CIRCUITS. NOTIFICATION APPLIANCE CIRCUITS SHALL MEET THE REQUIREMENTS FOR CLASS A STYLE Z CIRCUITS.
8. TESTING: CONTRACTOR SHALL SCHEDULE AND PERFORM ALL ACCEPTANCE TESTS REQUIRED BY NFPA 72. TESTING SHALL BE WITNESSED BY FAA AND/OR LOCAL FIRE DEPARTMENT.

FIRE ALARM KEY NOTES

1. EXISTING NOTIFICATION APPLIANCE POWER SUPPLY(S) (WHEELOCK POWERPATH) TO REMAIN. RECONFIGURE POWER SUPPLY(S) TO PROVIDE 24 VDC POWER TO NEW NOTIFICATION APPLIANCES INSTALLED AS PART OF TENANT IMPROVEMENT. INSTALL ADDITIONAL POWER SUPPLIES AS REQUIRED TO MEET CIRCUIT POWER REQUIREMENTS.
2. INSTALL NEW SMOKE DETECTORS BELOW CEILINGS THROUGHOUT TENANT IMPROVEMENT AREAS OF MAIN FLOOR. DETECTORS SHALL BE COMPATIBLE WITH AND CONNECTED TO EXISTING FACP. UPDATE FACP PROGRAMMING AS REQUIRED.
3. INSTALL NEW SMOKE DETECTORS BELOW SUB-FLOOR ADDED IN CONTROL ROOM 1052. DETECTORS SHALL BE COMPATIBLE WITH AND CONNECTED TO EXISTING FACP. UPDATE FACP PROGRAMMING AS REQUIRED.
4. INSTALL NEW FIRE ALARM PULL STATION AT EACH EXIT DOOR FROM TENANT IMPROVEMENT AREA. WALL MOUNT BETWEEN 42" AND 48" AFF TO CENTER OF PULL STATION. PULL STATION SHALL BE COMPATIBLE WITH AND CONNECTED TO EXISTING FACP. UPDATE FACP PROGRAMMING AS REQUIRED.
5. INSTALL NEW FIRE ALARM NOTIFICATION APPLIANCE TO PROVIDE AUDIBLE AND/OR VISIBLE NOTIFICATION THROUGHOUT TENANT IMPROVEMENT AREA. CONNECT TO NEW OR EXISTING NOTIFICATION APPLIANCE POWER SUPPLIES IN MECHANICAL 105C. AUDIBLE AND VISIBLE SIGNALS SHALL BE SYNCHRONIZED.
6. INSTALL STAGE 1 FIRE ALARM STROBES ON CEILING IN CONTROL ROOM. CONFIGURE STROBES TO ACTIVATE UPON ACTUATION OF ANY SINGLE SMOKE DETECTOR LOCATED ON CEILING IN MAIN FLOOR TENANT IMPROVEMENT AREA.
7. INSTALL STAGE 2 FIRE ALARM STROBE AND CHIME ON WALL IN CONTROL ROOM. CONFIGURE STROBE AND CHIME TO ACTIVATE UPON ACTUATION OF ANY HEAT DETECTOR OR PULL STATION LOCATED IN MAIN FLOOR TENANT IMPROVEMENT AREA.
8. SMOKE DAMPER. SEE MECHANICAL PLANS FOR LOCATION. INSTALL FIRE ALARM RELAY TO PROVIDE DAMPER ACTUATION. PROGRAM RELAY TO CLOSE DAMPER UPON ACTUATION OF ANY AREA SMOKE DETECTOR LOCATED IN AREA SERVED BY DAMPER.
9. APPROXIMATE LOCATION OF AIR HANDLER AHU-206. AREA SERVED BY AHU-206 IS PROTECTED THROUGHOUT BY SPOT TYPE SMOKE DETECTORS INSTALLED ON CEILING. INSTALL RELAY FROM FIRE ALARM SYSTEM TO SHUT DOWN AIR HANDLER UPON ACTUATION OF ANY SINGLE SMOKE DETECTOR IN AREA SERVED BY AHU-206.

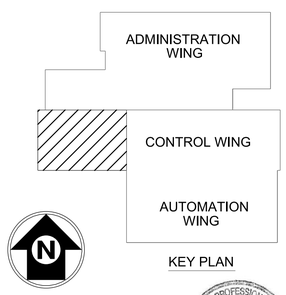

KEY PLAN

REGISTERED PROFESSIONAL ENGINEER
GREGORY T. JONES
No. M20884
MECHANICAL
STATE OF CALIFORNIA
02/04/2022

REV	APPROVED DATE	DESCRIPTION	JCN	REDLINE DATE	APVD

DEPARTMENT OF TRANSPORTATION
FEDERAL AVIATION ADMINISTRATION
ATO - TECHNICAL OPERATIONS WESTERN SERVICE AREA

ARTCC
RECONFIGURE M1 ROOM

FIRE ALARM PLAN - MAIN LEVEL

PALMDALE LOS ANGELES CTR CA

CLH ARCHITECTS ENGINEERS
Case, Lowe & Hart, Inc. 2484 Washington Blvd. Suite 510 Ogden, Utah 84401-2346 801.399.5821 www.clhae.com

E-Corp
BUILDING A WORLD OF DIFFERENCE

REVIEWED BY	SUBMITTED BY	APPROVED BY
	ART GAPASIN	DARYL KITCHEN
	PROJECT ENGINEER	MGR. ENGINEERING - LA

DESIGNED	GTJ	ISSUED BY	DATE 08.20.2021 JCN 1004394
DRAWN	NSS	ENGINEERING SERVICES ENROUTE/FSS	DRAWING NO ZLA-D-ARTCC- FP101 REV
CHECKED	GTJ		

17500

5/5/2020 11:59:52 AM

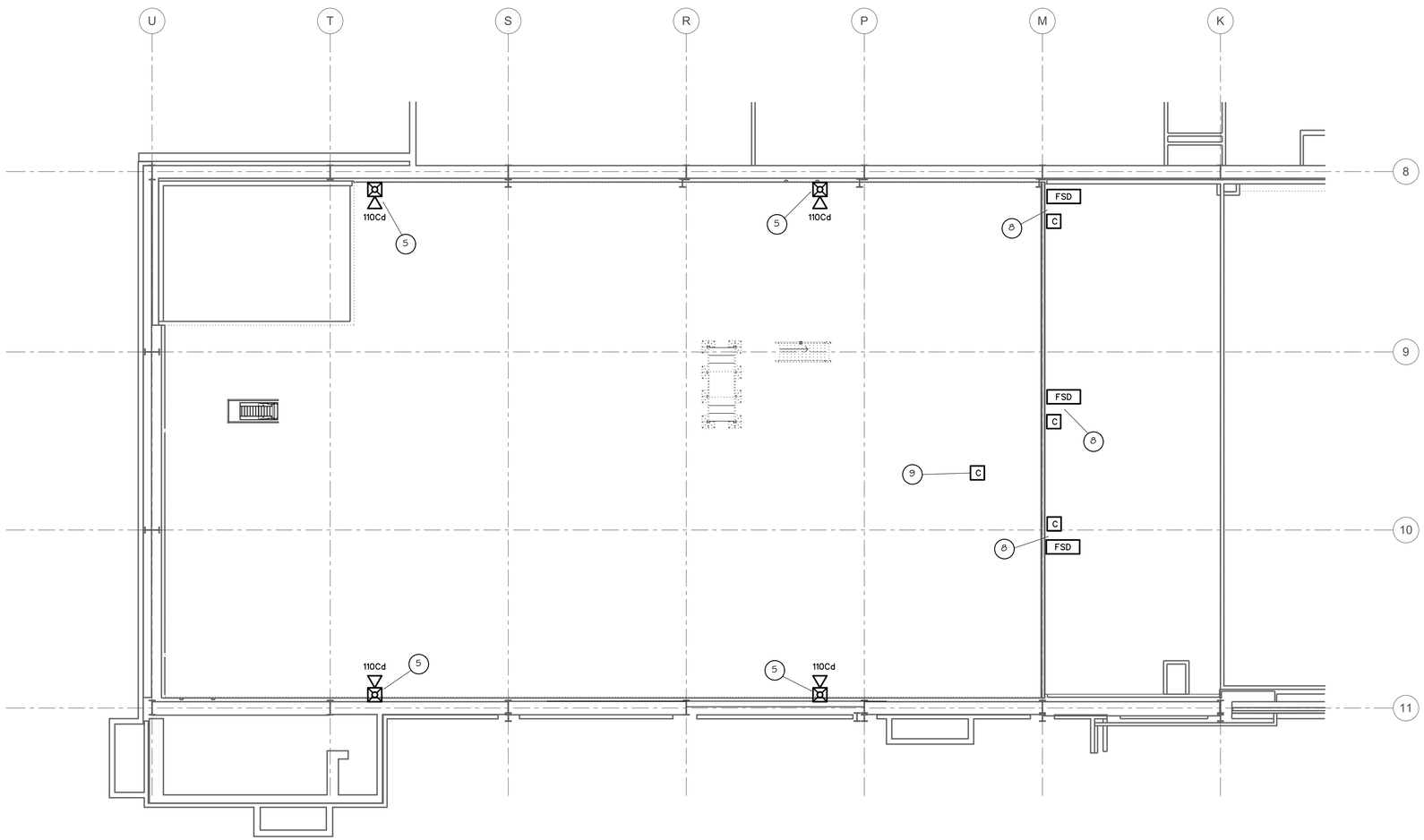

1 FIRE ALARM PLAN - MEZZANINE LEVEL

1/8" = 1'-0"

0 4' 8' 16'

FIRE ALARM GEN NOTES

1. SCOPE OF WORK: WORK SHALL INCLUDE REMODEL/EXPANSION OF EXISTING FIRE ALARM SYSTEM THROUGHOUT TENANT IMPROVEMENT AREA. DESIGN AND INSTALLATION OF FIRE ALARM SYSTEM SHALL COMPLY WITH ALL APPLICABLE PROVISIONS OF NFPA 72 AND FAA STANDARDS.

2. APPLICABLE CODES AND STANDARDS:
A.INTERNATIONAL BUILDING CODE 2018 EDITION
B.NFPA 70 2018 EDITION
C.NFPA 72 2016 EDITION
D. FAA FIRE LIFE SAFETY TECHNICAL IMPLEMENTATION GUIDANCE, 2017

QUALITY ASSURANCE: ALL NEW EQUIPMENT, MATERIAL AND DEVICES USED FOR THE FIRE ALARM SYSTEM EXPANSION SHALL BE UL LISTED AND/OR FM APPROVED FOR USE IN FIRE PROTECTION SYSTEMS. ALL INITIATING DEVICES SHALL BE LISTED COMPATIBLE WITH THE EXISTING FIRE ALARM CONTROL PANEL (FACP).

SUBMITTALS: FIRE ALARM SYSTEM CONTRACTOR SHALL PREPARE AND SUBMIT SHOP DRAWINGS TO ALL AUTHORITIES HAVING JURISDICTION FOR REVIEW/APPROVAL PRIOR TO ORDERING OR INSTALLING ANY EQUIPMENT. SUBMITTALS SHALL CONFORM TO THE CONSTRUCTION DOCUMENTS REQUIREMENTS OF NFPA 72.

SYSTEM TYPE: FIRE ALARM SYSTEM SHALL MEET THE REQUIREMENTS FOR PROTECTED PREMISE FIRE ALARM SYSTEMS. SYSTEM PROVIDES OFF-PREMISE NOTIFICATION OF STATUS TO OFF-PREMISE FIRE ALARM RECEIVING STATION. FIRE ALARM SYSTEM SHALL TRANSMIT FIRE ALARM SIGNALS (WATER FLOW SWITCHES, MANUAL PULL STATIONS, WET CHEMICAL SYSTEM ACTIVATION AND SMOKE DETECTOR), SUPERVISORY SIGNALS (VALVE TAMPER SWITCHES AND DUCT SMOKE DETECTORS) AND TROUBLE SIGNALS TO OFF-PREMISE FIRE ALARM RECEIVING STATION VIA EXISTING TRANSMISSION METHOD

WIRING/CONDUIT: ALL WIRING TO NEW. WIRING SHALL BE FREE OF OPENS, SHORTS AND GROUNDS. ALL WIRING SHALL BE INSTALLED IN RIGID, EMT OR FLEXIBLE CONDUIT. ALL PENETRATIONS THROUGH RATED PARTITIONS SHALL BE FIRE STOPPED WITH A SUITABLE CAULKING COMPOUND. ALL WIRING USED IN THE FIRE ALARM SYSTEM SHALL BE FPL (FIRE POWER LIMITED) WITH 300V INSULATION OR EQUIVALENT AS PER NFPA 70 ARTICLE 760.

WIRING STYLES (PER NFPA 72): INITIATING DEVICE CIRCUITS SHALL MEET THE REQUIREMENTS FOR CLASS A STYLE D. CIRCUITS. NOTIFICATION APPLIANCE CIRCUITS SHALL MEET THE REQUIREMENTS FOR CLASS A STYLE Z CIRCUITS.

TESTING: CONTRACTOR SHALL SCHEDULE AND PERFORM ALL ACCEPTANCE TESTS REQUIRED BY NFPA 72. TESTING SHALL BE WITNESSED BY FAA AND/OR LOCAL FIRE DEPARTMENT.

FIRE ALARM KEY NOTES

1. EXISTING NOTIFICATION APPLIANCE POWER SUPPLY(S) (WHEELOCK POWERPATH) TO REMAIN. RECONFIGURE POWER SUPPLY(S) TO PROVIDE 24 VDC POWER TO NEW NOTIFICATION APPLIANCES INSTALLED AS PART OF TENANT IMPROVEMENT. INSTALL ADDITIONAL POWER SUPPLIES AS REQUIRED TO MEET CIRCUIT POWER REQUIREMENTS.

2. INSTALL NEW SMOKE DETECTORS BELOW CEILINGS THROUGHOUT TENANT IMPROVEMENT AREAS OF MAIN FLOOR. DETECTORS SHALL BE COMPATIBLE WITH AND CONNECTED TO EXISTING FACP. UPDATE FACP PROGRAMMING AS REQUIRED.

3. INSTALL NEW SMOKE DETECTORS BELOW SUB-FLOOR ADDED IN CONTROL ROOM 1052. DETECTORS SHALL BE COMPATIBLE WITH AND CONNECTED TO EXISTING FACP. UPDATE FACP PROGRAMMING AS REQUIRED.

4. INSTALL NEW FIRE ALARM PULL STATION AT EACH EXIT DOOR FROM TENANT IMPROVEMENT AREA. WALL MOUNT BETWEEN 42" AND 48" AFF TO CENTER OF PULL STATION. PULL STATION SHALL BE COMPATIBLE WITH AND CONNECTED TO EXISTING FACP. UPDATE FACP PROGRAMMING AS REQUIRED.

5. INSTALL NEW FIRE ALARM NOTIFICATION APPLIANCE TO PROVIDE AUDIBLE AND/OR VISIBLE NOTIFICATION THROUGHOUT TENANT IMPROVEMENT AREA. CONNECT TO NEW OR EXISTING NOTIFICATION APPLIANCE POWER SUPPLIES IN MECHANICAL 105C. AUDIBLE AND VISIBLE SIGNALS SHALL BE SYNCHRONIZED.

6. INSTALL STAGE 1 FIRE ALARM STROBES ON CEILING IN CONTROL ROOM. CONFIGURE STROBES TO ACTIVATE UPON ACTUATION OF ANY SINGLE SMOKE DETECTOR LOCATED ON CEILING IN MAIN FLOOR TENANT IMPROVEMENT AREA.

7. INSTALL STAGE 2 FIRE ALARM STROBE AND CHIME ON WALL IN CONTROL ROOM. CONFIGURE STROBE AND CHIME TO ACTIVATE UPON ACTUATION OF ANY HEAT DETECTOR OR PULL STATION LOCATED IN MAIN FLOOR TENANT IMPROVEMENT AREA.

8. SMOKE DAMPER. SEE MECHANICAL PLANS FOR LOCATION. INSTALL FIRE ALARM RELAY TO PROVIDE DAMPER ACTUATION. PROGRAM RELAY TO CLOSE DAMPER UPON ACTUATION OF ANY AREA SMOKE DETECTOR LOCATED IN AREA SERVED BY DAMPER.

9. APPROXIMATE LOCATION OF AIR HANDLER AHU-206. AREA SERVED BY AHU-206 IS PROTECTED THROUGHOUT BY SPOT TYPE SMOKE DETECTORS INSTALLED ON CEILING. INSTALL RELAY FROM FIRE ALARM SYSTEM TO SHUT DOWN AIR HANDLER UPON ACTUATION OF ANY SINGLE SMOKE DETECTOR IN AREA SERVED BY AHU-206.

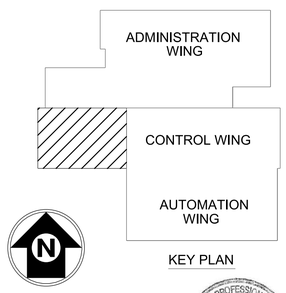

KEY PLAN

REGISTERED PROFESSIONAL ENGINEER
GREGORY T. JONES
No. M30224
MECHANICAL
STATE OF CALIFORNIA
02/04/2022

REV	APPROVED DATE	DESCRIPTION	JCN	REDLINE DATE	APVD

DEPARTMENT OF TRANSPORTATION
FEDERAL AVIATION ADMINISTRATION
ATO - TECHNICAL OPERATIONS WESTERN SERVICE AREA

ARTCC
RECONFIGURE M1 ROOM

FIRE ALARM PLAN - MEZZANINE LEVEL

PALMDALE LOS ANGELES CTR CA

CLH ARCHITECTS ENGINEERS
Case, Lowe & Hart, Inc. 2484 Washington Blvd. Suite 510 Ogden, Utah 84401-2346 801.399.5821 www.clhae.com

E-Corp
BUILDING A WORLD OF DIFFERENCE

REVIEWED BY	SUBMITTED BY	APPROVED BY
	ART GAPASIN	DARYL KITCHEN
	PROJECT ENGINEER	MGR. ENGINEERING - LA

DESIGNED	GTJ	ISSUED BY	DATE 08.20.2021 JCN 1004394
DRAWN	NSS	ENGINEERING SERVICES ENROUTE/FSS	DRAWING NO ZLA-D-ARTCC- FP102 REV
CHECKED	GTJ		

17500

5/5/2020 11:59:52 AM

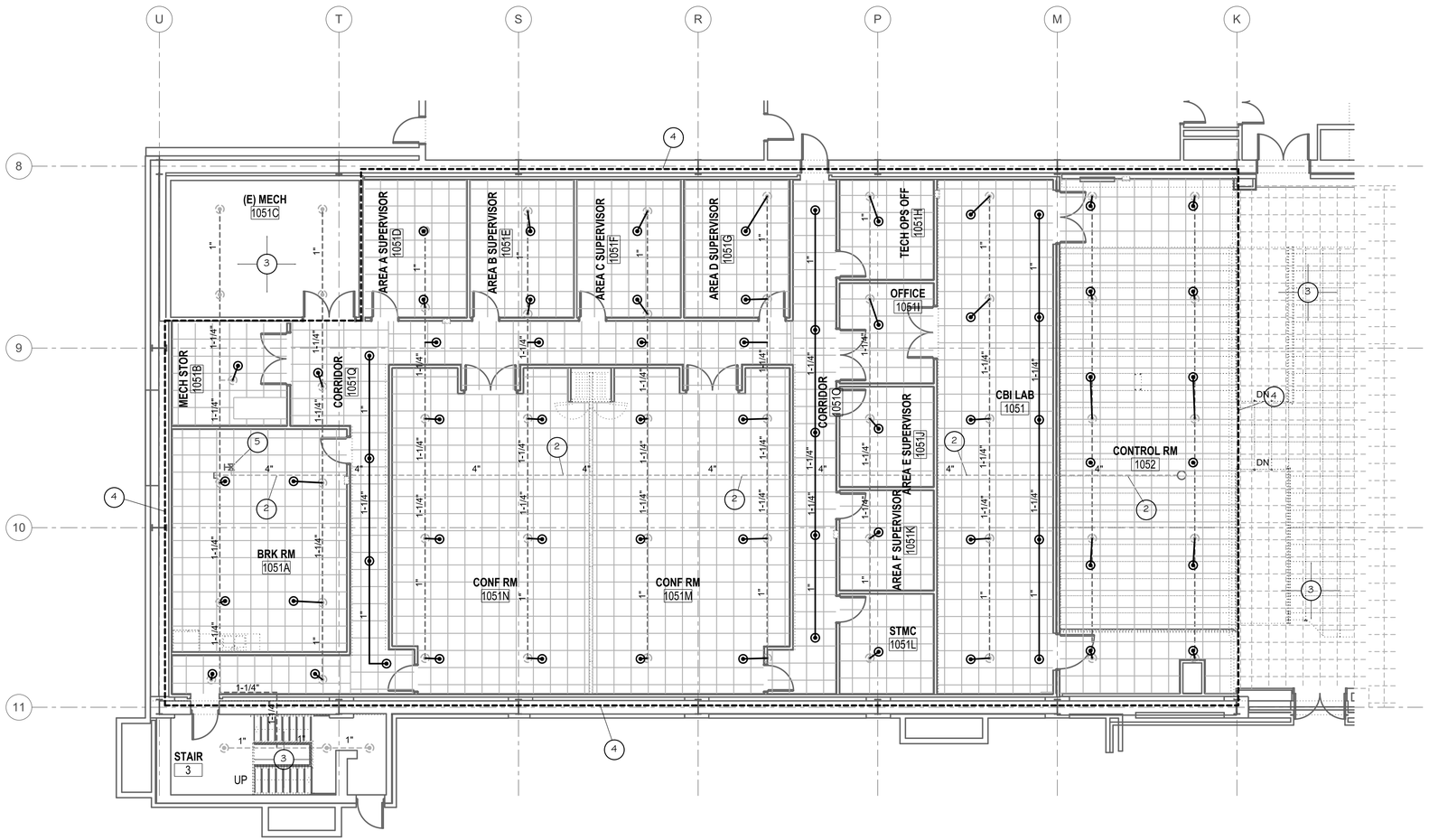

1 FIRE SPRINKLER PLAN - MAIN LEVEL

1/8" = 1'-0"

0 4' 8' 16'

FIRE SPKR GEN. NOTES

1. THE FIRE SPRINKLER SYSTEM IS DESIGNED TO COMPLY WITH THE APPLICABLE PROVISIONS OF THE FOLLOWING CODES AND STANDARDS:
   A. FAA FIRE LIFE SAFETY TECHNICAL IMPLEMENTATION GUIDANCE, 2017
   B. NFPA 13 INSTALLATION OF FIRE SPRINKLER SYSTEMS 2016 EDITION
2. THE DESIGN OF THE FIRE SPRINKLER SYSTEM CONTAINED ON THIS DRAWING IS CONCEPTUAL IN NATURE. THE LOCATIONS SHOWN ON THESE DRAWINGS FOR SPRINKLERS, PIPING AND OTHER FIRE PROTECTION EQUIPMENT ARE APPROXIMATE AND MUST BE ADJUSTED WHERE REQUIRED TO MATCH ACTUAL BUILDING CONDITIONS. THE FIRE SPRINKLER CONTRACTOR SHALL BE RESPONSIBLE TO FIELD VERIFY EXISTING CONDITIONS, DEVELOP THE FINAL DESIGN FOR FIRE SPRINKLER SYSTEM, PREPARE SHOP DRAWINGS, HYDRAULIC CALCULATIONS AND OBTAIN APPROVAL FROM AUTHORITY HAVING JURISDICTION.
3. FURNISH ALL MATERIALS, EQUIPMENT AND SUPPLIES AND PERFORM ALL WORK AND OPERATIONS TO REMODEL AND MAKE FUNCTIONAL THE EXISTING CYCLING TYPE PRE-ACTION FIRE SPRINKLER SYSTEMS TO PROTECT TENANT IMPROVEMENT AREAS. THE SYSTEM DESIGN SHALL MEET THE REQUIREMENTS OF FAA STANDARDS, NFPA 13 2016 EDITION AND BE IN ACCORDANCE WITH THE DRAWINGS AND SPECIFICATIONS.
4. FIRE SPRINKLER DESIGN DENSITIES:
   MECHANICAL, STORAGE, CBI LAB AND ATTIC SPACE – ORDINARY HAZARD GROUP 1. 0.15 GPM/SQ FT OVER 1,950 SQ FT WITH 250 GPM HOSE ALLOWANCE.
   ALL OTHER AREAS – LIGHT HAZARD. 0.10 GPM/SQ FT OVER 1,950 SQ FT WITH 100 GPM HOSE ALLOWANCE
5. MAXIMUM COVERAGE PER SPRINKLER HEAD.
   A. ORDINARY HAZARD: 130 SQ. FT.
   B. LIGHT HAZARD: 225 SQ. FT.
6. ALL DEVICES AND MATERIALS USED FOR THE INSTALLATION OF THE FIRE SPRINKLER SYSTEM SHALL BE U.L. LISTED AND/OR FM APPROVED FOR USE IN FIRE PROTECTION SYSTEMS.
7. NEW FIRE SPRINKLER PIPING SHALL BE STEEL PIPE CONFORMING TO ANSI/ASTM A53, ASTM A135 OR A795. PIPING SHALL BE DOMESTIC, BLACK STEEL, SCHEDULE 40 PIPING.
8. FITTINGS:
   A. PIPING 2" AND SMALLER IN NOMINAL DIAMETER SHALL BE JOINED WITH THREADED JOINTS USING CAST IRON FITTINGS AND COUPLINGS.
   B. PIPING 2-1/2" AND LARGER IN NOMINAL DIAMETER SHALL BE JOINED WITH ROLL GROOVED JOINTS USING RUBBER GASKETED VICTAULIC STYLE FITTINGS AND COUPLINGS.
   C. PLAIN END FITTINGS MAY NOT BE USED.
9. HANGERS:
   1-1/4" AND SMALLER PIPE: MINIMUM ONE HANGER PER LENGTH OF PIPE AND MAXIMUM 12'-0" BETWEEN HANGERS.
   1-1/2" AND LARGER: MINIMUM ONE HANGER PER LENGTH OF PIPE AND MAXIMUM 15'-0" BETWEEN HANGERS.
10. FIRE SPRINKLERS – STANDARD ORIFICE (K-5.6), FACTORY WHITE, GLASS BULB, UPRIGHT OR PENDENT, ORDINARY TEMPERATURE RATED.
11. CONTRACTOR SHALL PREPARE AND SUBMIT COMPLETE SHOP DRAWINGS AND HYDRAULIC CALCULATIONS IN ACCORDANCE WITH NFPA 13 FOR REVIEW AND APPROVAL TO THE PROJECT ENGINEER AND THE FAA PRIOR TO ORDERING, FABRICATING OR INSTALLING ANY EQUIPMENT.
12. CONTRACTOR SHALL PERFORM ALL TESTING AND COMMISSIONING REQUIRED BY NFPA 13 AND NFPA 72 AND RECOMMENDED BY EQUIPMENT MANUFACTURERS. ALL TESTING SHALL BE WITNESSED AND APPROVED BY THE FAA.

FIRE SPKR KEY NOTES

1. EXISTING 4" FEED MAIN FROM PRE-ACTION FIRE SPRINKLER RISERS TO REMAIN
2. EXISTING 4" FIRE SPRINKLER CROSS MAIN TO REMAIN. LOCATION AND SIZE ARE APPROXIMATE. CONTRACTOR SHALL FIELD VERIFY.
3. EXISTING FIRE SPRINKLER SYSTEM IN ATTIC SPACE AND PORTIONS OF BUILDING NOT UNDERGOING TENANT IMPROVEMENT TO REMAIN.
4. TENANT IMPROVEMENT TO OCCUR IN AREA SHOWN. DEMO, MODIFY, ADJUST AND/OR ADD FIRE SPRINKLERS AND PIPING AS REQUIRED TO ACCOMMODATE REMODEL AND ENSURE FIRE SPRINKLER PROTECTION THROUGHOUT AREA IN ACCORDANCE WITH NFPA 13. REFER TO ARCHITECTURAL PLANS TO DETERMINE SCOPE AND EXTENT OF REMODEL. COORDINATE WITH MECHANICAL AND ELECTRICAL SYSTEMS. LOCATIONS OF FIRE SPRINKLERS AND PIPING ON DRAWINGS IS APPROXIMATE AND SHOULD BE FIELD VERIFIED BY CONTRACTOR.
5. EXISTING LOW POINT DRAIN FOR PRE-ACTION FIRE SPRINKLER SYSTEM TO REMAIN. FIELD LOCATE. PIPING SLOPES TO WEST END OF CROSS MAIN.

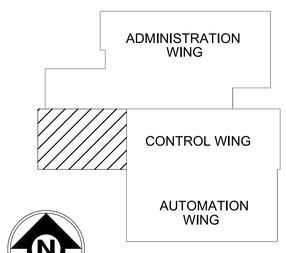

KEY PLAN

PROFESSIONAL ENGINEER
GREGORY T. JONES
No. M30284
MECHANICAL
STATE OF CALIFORNIA
02/04/2022

REV	APPROVED DATE	DESCRIPTION	JCN	REDLINE DATE	APVD

DEPARTMENT OF TRANSPORTATION
FEDERAL AVIATION ADMINISTRATION
ATO - TECHNICAL OPERATIONS — WESTERN SERVICE AREA

ARTCC
RECONFIGURE M1 ROOM

FIRE SPRINKLER PLAN MAIN LEVEL

PALMDALE — LOS ANGELES CTR — CA

CLH ARCHITECTS ENGINEERS
Case, Lowe & Hart, Inc. 2484 Washington Blvd. Suite 510 Ogden, Utah 84401-2346
801.399.5821 www.clhae.com

E-Corp
BUILDING A WORLD OF DIFFERENCE

REVIEWED BY	SUBMITTED BY	APPROVED BY
	ART GAPASIN	DARYL KITCHEN
	PROJECT ENGINEER	MGR. ENGINEERING - LA

DESIGNED GTJ	ISSUED BY	DATE 08.20.2021	JCN 1004394
DRAWN NSS	ENGINEERING SERVICES ENROUTE/FSS	DRAWING NO ZLA-D-ARTCC- FP103	REV
CHECKED GTJ			

17500

5/5/2020 11:59:52 AM

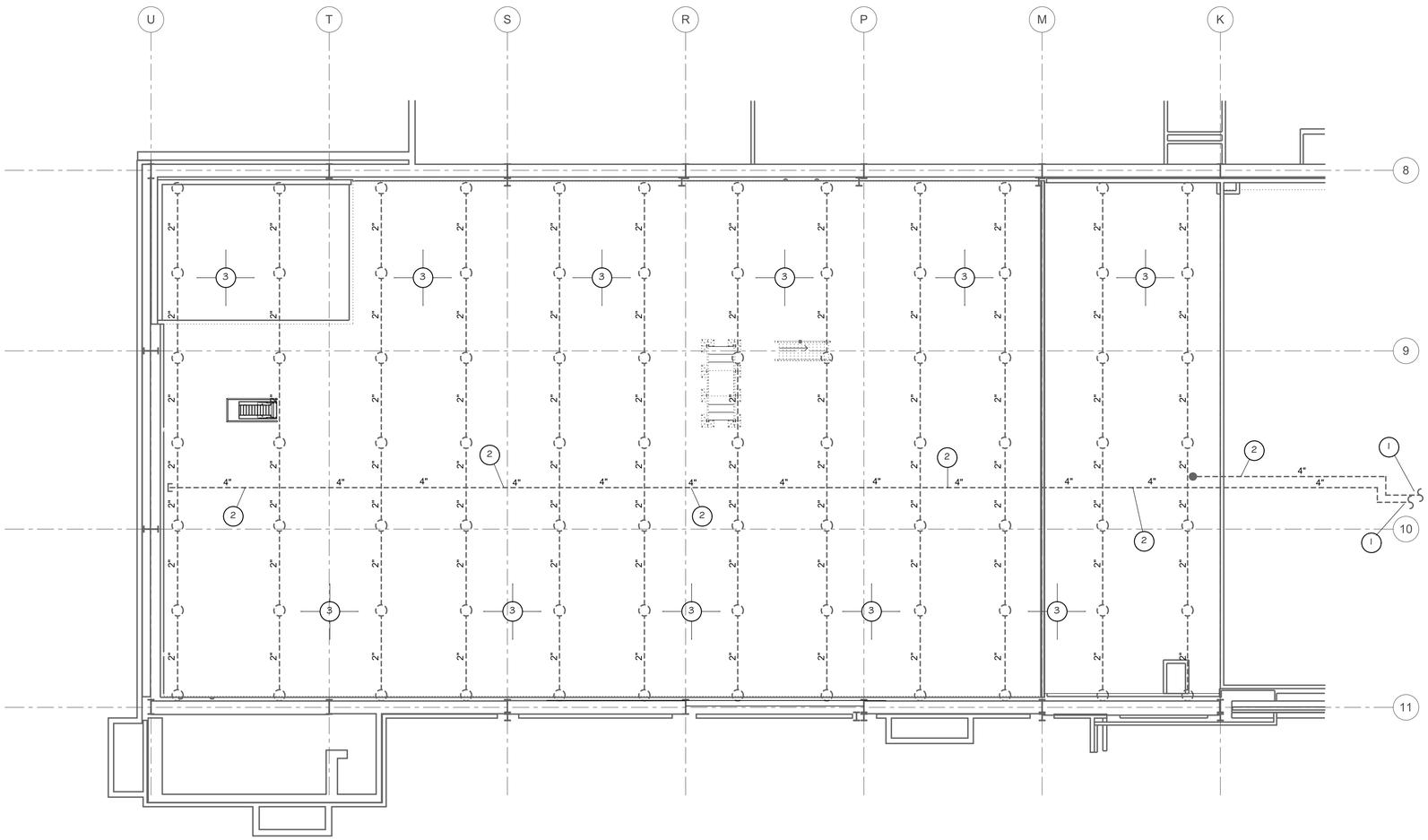

1 FIRE SPRINKLER PLAN - ATTIC LEVEL
1/8" = 1'-0"
0 4' 8' 16'

FIRE SPKR GEN. NOTES

1. THE FIRE SPRINKLER SYSTEM IS DESIGNED TO COMPLY WITH THE APPLICABLE PROVISIONS OF THE FOLLOWING CODES AND STANDARDS:
   A. FAA FIRE LIFE SAFETY TECHNICAL IMPLEMENTATION GUIDANCE, 2017
   B. NFPA 13 INSTALLATION OF FIRE SPRINKLER SYSTEMS 2016 EDITION
2. THE DESIGN OF THE FIRE SPRINKLER SYSTEM CONTAINED ON THIS DRAWING IS CONCEPTUAL IN NATURE. THE LOCATIONS SHOWN ON THESE DRAWINGS FOR SPRINKLERS, PIPING AND OTHER FIRE PROTECTION EQUIPMENT ARE APPROXIMATE AND MUST BE ADJUSTED WHERE REQUIRED TO MATCH ACTUAL BUILDING CONDITIONS. THE FIRE SPRINKLER CONTRACTOR SHALL BE RESPONSIBLE TO FIELD VERIFY EXISTING CONDITIONS, DEVELOP THE FINAL DESIGN FOR FIRE SPRINKLER SYSTEM, PREPARE SHOP DRAWINGS, HYDRAULIC CALCULATIONS AND OBTAIN APPROVAL FROM AUTHORITY HAVING JURISDICTION.
3. FURNISH ALL MATERIALS, EQUIPMENT AND SUPPLIES AND PERFORM ALL WORK AND OPERATIONS TO REMODEL AND MAKE FUNCTIONAL THE EXISTING CYCLING TYPE PRE–ACTION FIRE SPRINKLER SYSTEMS TO PROTECT TENANT IMPROVEMENT AREAS. THE SYSTEM DESIGN SHALL MEET THE REQUIREMENTS OF FAA STANDARDS, NFPA 13 2016 EDITION AND BE IN ACCORDANCE WITH THE DRAWINGS AND SPECIFICATIONS.
4. FIRE SPRINKLER DESIGN DENSITIES:
   MECHANICAL, STORAGE, CBI LAB AND ATTIC SPACE – ORDINARY HAZARD GROUP 1. 0.15 GPM/SQ FT OVER 1,950 SQ FT WITH 250 GPM HOSE ALLOWANCE.
   ALL OTHER AREAS – LIGHT HAZARD. 0.10 GPM/SQ FT OVER 1,950 SQ FT WITH 100 GPM HOSE ALLOWANCE
5. MAXIMUM COVERAGE PER SPRINKLER HEAD.
   A. ORDINARY HAZARD: 130 SQ. FT.
   B. LIGHT HAZARD: 225 SQ. FT.
6. ALL DEVICES AND MATERIALS USED FOR THE INSTALLATION OF THE FIRE SPRINKLER SYSTEM SHALL BE U.L. LISTED AND/OR FM APPROVED FOR USE IN FIRE PROTECTION SYSTEMS.
7. NEW FIRE SPRINKLER PIPING SHALL BE STEEL PIPE CONFORMING TO ANSI/ASTM A53, ASTM A135 OR A795. PIPING SHALL BE DOMESTIC, BLACK STEEL, SCHEDULE 40 PIPING.
8. FITTINGS:
   A. PIPING 2" AND SMALLER IN NOMINAL DIAMETER SHALL BE JOINED WITH THREADED JOINTS USING CAST IRON FITTINGS AND COUPLINGS.
   B. PIPING 2–1/2" AND LARGER IN NOMINAL DIAMETER SHALL BE JOINED WITH ROLL GROOVED JOINTS USING RUBBER GASKETED VICTAULIC STYLE FITTINGS AND COUPLINGS.
   C. PLAIN END FITTINGS MAY NOT BE USED.
9. HANGERS:
   1–1/4" AND SMALLER PIPE: MINIMUM ONE HANGER PER LENGTH OF PIPE AND MAXIMUM 12'–0" BETWEEN HANGERS.
   1–1/2" AND LARGER: MINIMUM ONE HANGER PER LENGTH OF PIPE AND MAXIMUM 15'–0" BETWEEN HANGERS.
10. FIRE SPRINKLERS – STANDARD ORIFICE (K–5.6), FACTORY WHITE, GLASS BULB, UPRIGHT OR PENDENT, ORDINARY TEMPERATURE RATED.
11. CONTRACTOR SHALL PREPARE AND SUBMIT COMPLETE SHOP DRAWINGS AND HYDRAULIC CALCULATIONS IN ACCORDANCE WITH NFPA 13 FOR REVIEW AND APPROVAL TO THE PROJECT ENGINEER AND THE FAA PRIOR TO ORDERING, FABRICATING OR INSTALLING ANY EQUIPMENT.
12. CONTRACTOR SHALL PERFORM ALL TESTING AND COMMISSIONING REQUIRED BY NFPA 13 AND NFPA 72 AND RECOMMENDED BY EQUIPMENT MANUFACTURERS. ALL TESTING SHALL BE WITNESSED AND APPROVED BY THE FAA.

FIRE SPKR KEY NOTES

1. EXISTING 4" FEED MAIN FROM PRE–ACTION FIRE SPRINKLER RISERS TO REMAIN
2. EXISTING 4" FIRE SPRINKLER CROSS MAIN TO REMAIN. LOCATION AND SIZE ARE APPROXIMATE. CONTRACTOR SHALL FIELD VERIFY.
3. EXISTING FIRE SPRINKLER SYSTEM IN ATTIC SPACE AND PORTIONS OF BUILDING NOT UNDERGOING TENANT IMPROVEMENT TO REMAIN.
4. TENANT IMPROVEMENT TO OCCUR IN AREA SHOWN. DEMO, MODIFY, ADJUST AND/OR ADD FIRE SPRINKLERS AND PIPING AS REQUIRED TO ACCOMMODATE REMODEL AND ENSURE FIRE SPRINKLER PROTECTION THROUGHOUT AREA IN ACCORDANCE WITH NFPA 13. REFER TO ARCHITECTURAL PLANS TO DETERMINE SCOPE AND EXTENT OF REMODEL. COORDINATE WITH MECHANICAL AND ELECTRICAL SYSTEMS. LOCATIONS OF FIRE SPRINKLERS AND PIPING ON DRAWINGS IS APPROXIMATE AND SHOULD BE FIELD VERIFIED BY CONTRACTOR.
5. EXISTING LOW POINT DRAIN FOR PRE–ACTION FIRE SPRINKLER SYSTEM TO REMAIN. FIELD LOCATE. PIPING SLOPES TO WEST END OF CROSS MAIN.

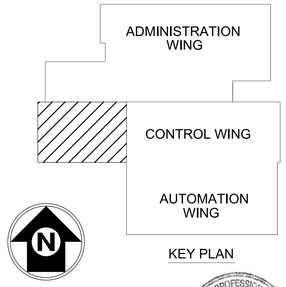

KEY PLAN

REGISTERED PROFESSIONAL ENGINEER
GREGORY T. JONES
No. M30284
MECHANICAL
STATE OF CALIFORNIA
02/04/2022

REV	APPROVED DATE	DESCRIPTION	JCN	REDLINE DATE	APVD

DEPARTMENT OF TRANSPORTATION
FEDERAL AVIATION ADMINISTRATION
ATO - TECHNICAL OPERATIONS — WESTERN SERVICE AREA

ARTCC
RECONFIGURE M1 ROOM

FIRE SPRINKLER PLAN ATTIC LEVEL

PALMDALE — LOS ANGELES CTR — CA

CLH ARCHITECTS ENGINEERS
Case, Lowe & Hart, Inc. 2484 Washington Blvd. Suite 510 Ogden, Utah 84401-2346 801.399.5821 www.clhae.com

E-Corp
BUILDING A WORLD OF DIFFERENCE

REVIEWED BY	SUBMITTED BY	APPROVED BY
	ART GAPASIN	DARYL KITCHEN
	PROJECT ENGINEER	MGR. ENGINEERING - LA

DESIGNED	GTJ	ISSUED BY	DATE 08.20.2021 JCN 1004394
DRAWN	NSS	ENGINEERING SERVICES ENROUTE/FSS	DRAWING NO ZLA-D-ARTCC- FP104 REV
CHECKED	GTJ		

17500
5/5/2020 11:59:52 AM

DETECTION KEY NOTES

1. EXISTING HEAT DETECTOR TO VIKING FIRECYCLE, SINGLE INTERLOCK PRE-ACTION FIRE SPRINKLER SYSTEM TO REMAIN. PROTECT DEVICE IN PLACE DURING REMODEL OF ADJACENT AREAS.
2. INSTALL NEW, FIXED TEMPERATURE (140 DEGREES F), SPOT TYPE HEAT DETECTOR FOR VIKING FIRECYCLE, SINGLE INTERLOCK PRE-ACTION FIRE SPRINKLER SYSTEM. DETECTOR SHALL BE VIKING MULTI-CYCLE OH DETECTOR, MODEL C OR EQUAL. MOUNT DETECTOR ON UNDERSIDE OF CEILING AND CONNECT TO EXISTING FIRECYCLE CONTROL PANEL.

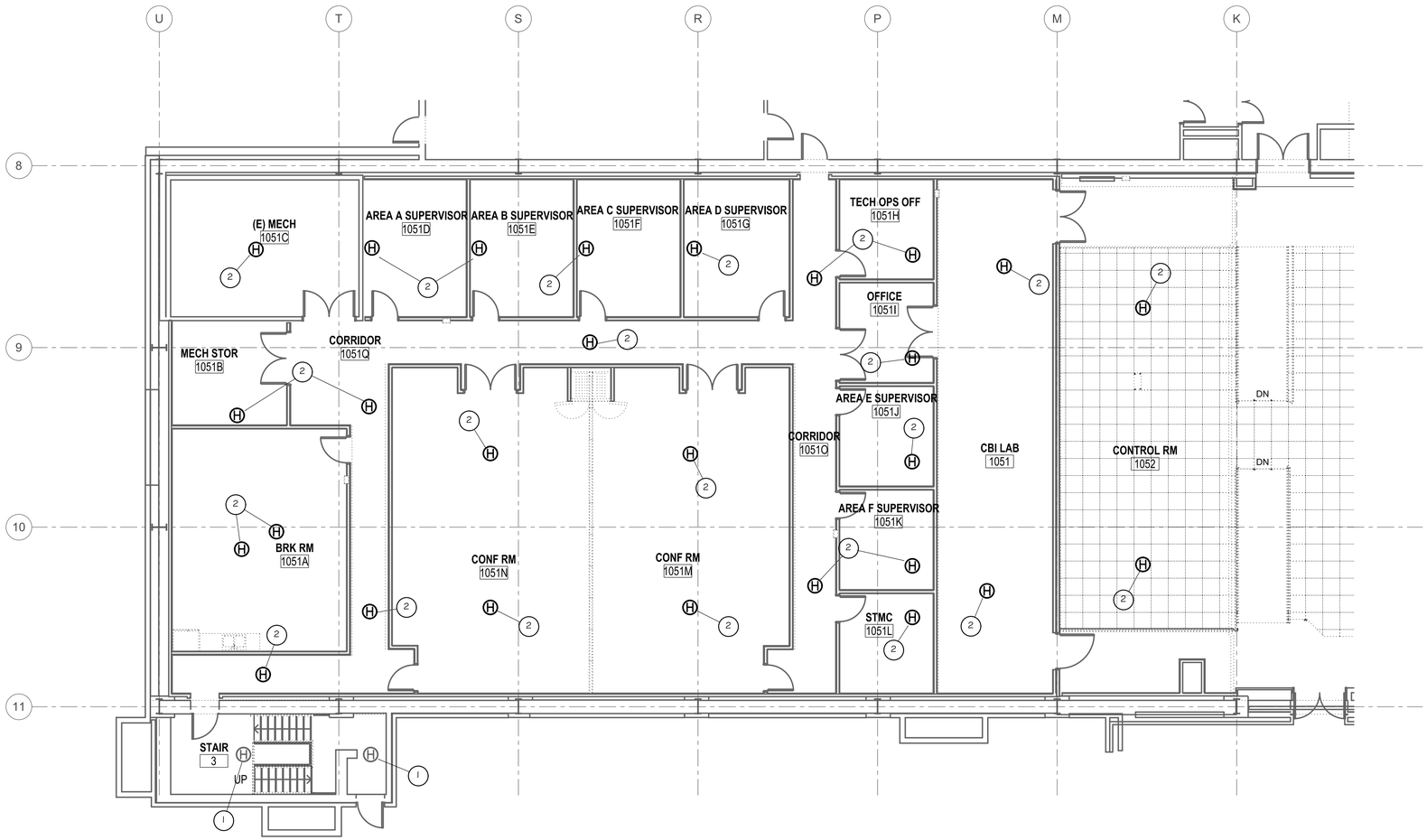

1 PRE-ACTION DETECTION PLAN - MAIN LEVEL

1/8" = 1'-0"

0 4' 8' 16'

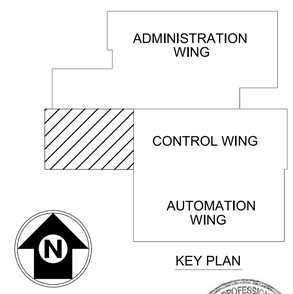

KEY PLAN

REGISTERED PROFESSIONAL ENGINEER
GREGORY T. JONES
No. M30984
MECHANICAL
STATE OF CALIFORNIA
02/04/2022

REV	APPROVED DATE	DESCRIPTION	JCN	REDLINE DATE	APVD

DEPARTMENT OF TRANSPORTATION
FEDERAL AVIATION ADMINISTRATION
ATO - TECHNICAL OPERATIONS — WESTERN SERVICE AREA

ARTCC
RECONFIGURE M1 ROOM

PRE-ACTION DETECTION PLAN - MAIN LEVEL

PALMDALE — LOS ANGELES CTR — CA

CLH ARCHITECTS ENGINEERS
Case, Lowe & Hart, Inc. 2484 Washington Blvd. Suite 510 Ogden, Utah 84401-2346 801.399.5821 www.clhac.com

E-Corp
BUILDING A WORLD OF DIFFERENCE

REVIEWED BY	SUBMITTED BY	APPROVED BY
	ART GAPASIN	DARYL KITCHEN
	PROJECT ENGINEER	MGR. ENGINEERING - LA
	DESIGNED GTJ	ISSUED BY: ENGINEERING SERVICES ENROUTE/FSS
	DRAWN NSS	DATE 08.20.2021 — JCN 1004394
	CHECKED GTJ	DRAWING NO ZLA-D-ARTCC- FP105 — REV

17520

5/5/2020 11:59:52 AM

DETECTION KEY NOTES

1. EXISTING HEAT DETECTOR TO VIKING FIRECYCLE, SINGLE INTERLOCK PRE-ACTION FIRE SPRINKLER SYSTEM TO REMAIN. PROTECT DEVICE IN PLACE DURING REMODEL OF ADJACENT AREAS.

2. INSTALL NEW, FIXED TEMPERATURE (140 DEGREES F), SPOT TYPE HEAT DETECTOR FOR VIKING FIRECYCLE, SINGLE INTERLOCK PRE-ACTION FIRE SPRINKLER SYSTEM. DETECTOR SHALL BE VIKING MULTI-CYCLE OH DETECTOR, MODEL C OR EQUAL. MOUNT DETECTOR ON UNDERSIDE OF CEILING AND CONNECT TO EXISTING FIRECYCLE CONTROL PANEL.

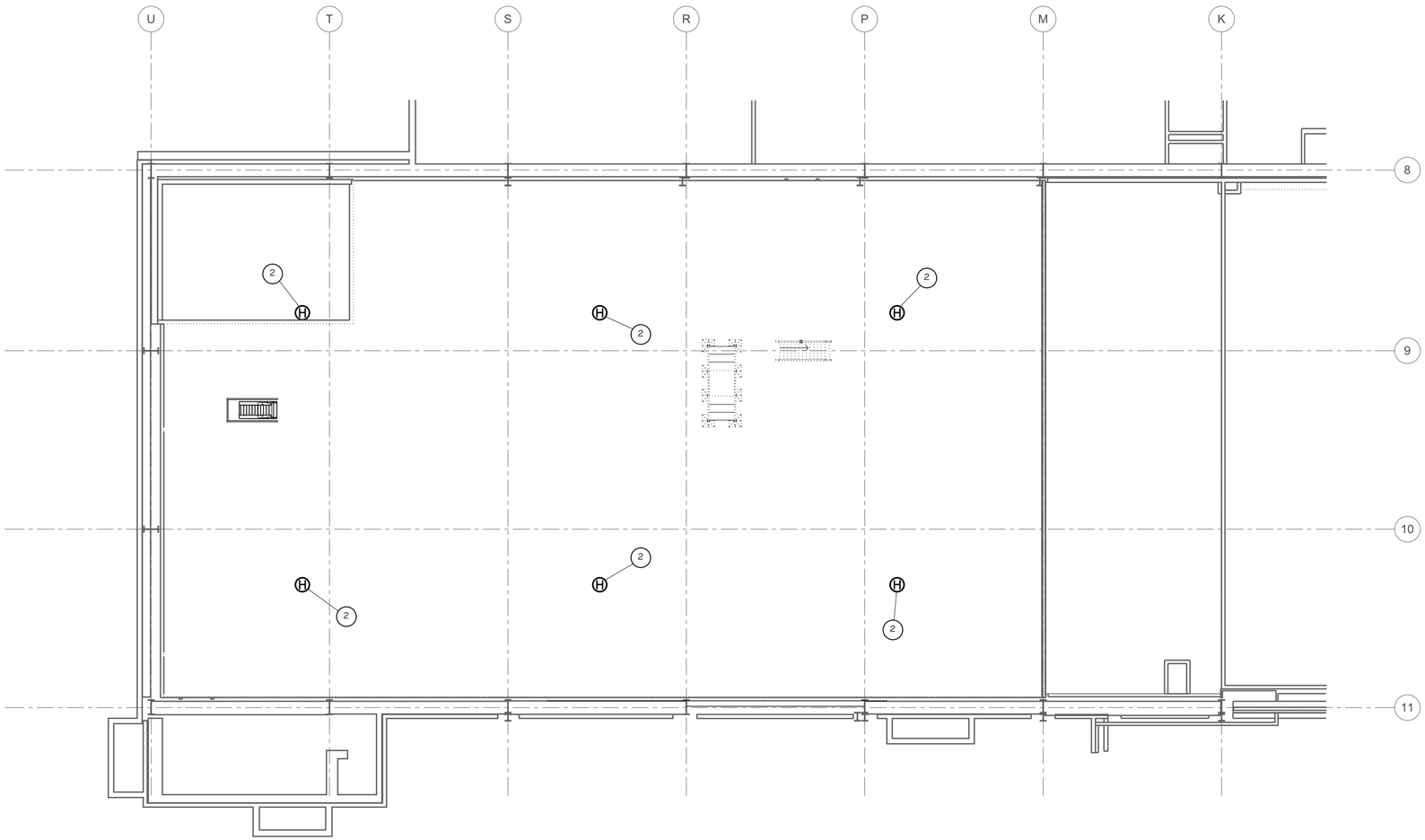

1 PRE-ACTION DETECTION PLAN - ATTIC LEVEL

1/8" = 1'-0"

0 4' 8' 16'

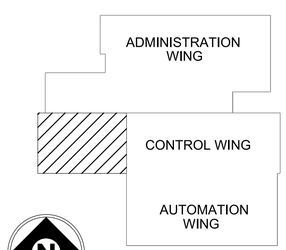

KEY PLAN

REGISTERED PROFESSIONAL ENGINEER
GREGORY T. JONES
No. M30884
MECHANICAL
STATE OF CALIFORNIA
02/04/2022

REV	APPROVED DATE	DESCRIPTION	JCN	REDLINE DATE	APVD

DEPARTMENT OF TRANSPORTATION
FEDERAL AVIATION ADMINISTRATION
ATO - TECHNICAL OPERATIONS — WESTERN SERVICE AREA

ARTCC
RECONFIGURE M1 ROOM

PRE-ACTION DETECTION PLAN - ATTIC LEVEL

PALMDALE — LOS ANGELES CTR — CA

CLH ARCHITECTS ENGINEERS
Case, Lowe & Hart, Inc. 2484 Washington Blvd. Suite 510 Ogden, Utah 84401-2346
801.399.5821 www.clhae.com

E-Corp
BUILDING A WORLD OF DIFFERENCE

REVIEWED BY	SUBMITTED BY	APPROVED BY
	ART GAPASIN	DARYL KITCHEN
	PROJECT ENGINEER	MGR. ENGINEERING - LA

DESIGNED	GTJ	ISSUED BY: ENGINEERING SERVICES ENROUTE/FSS	DATE 08.20.2021 — JCN 1004394
DRAWN	NSS		DRAWING NO ZLA-D-ARTCC- FP106 — REV
CHECKED	GTJ		

1/7500

5/5/2020 11:59:52 AM

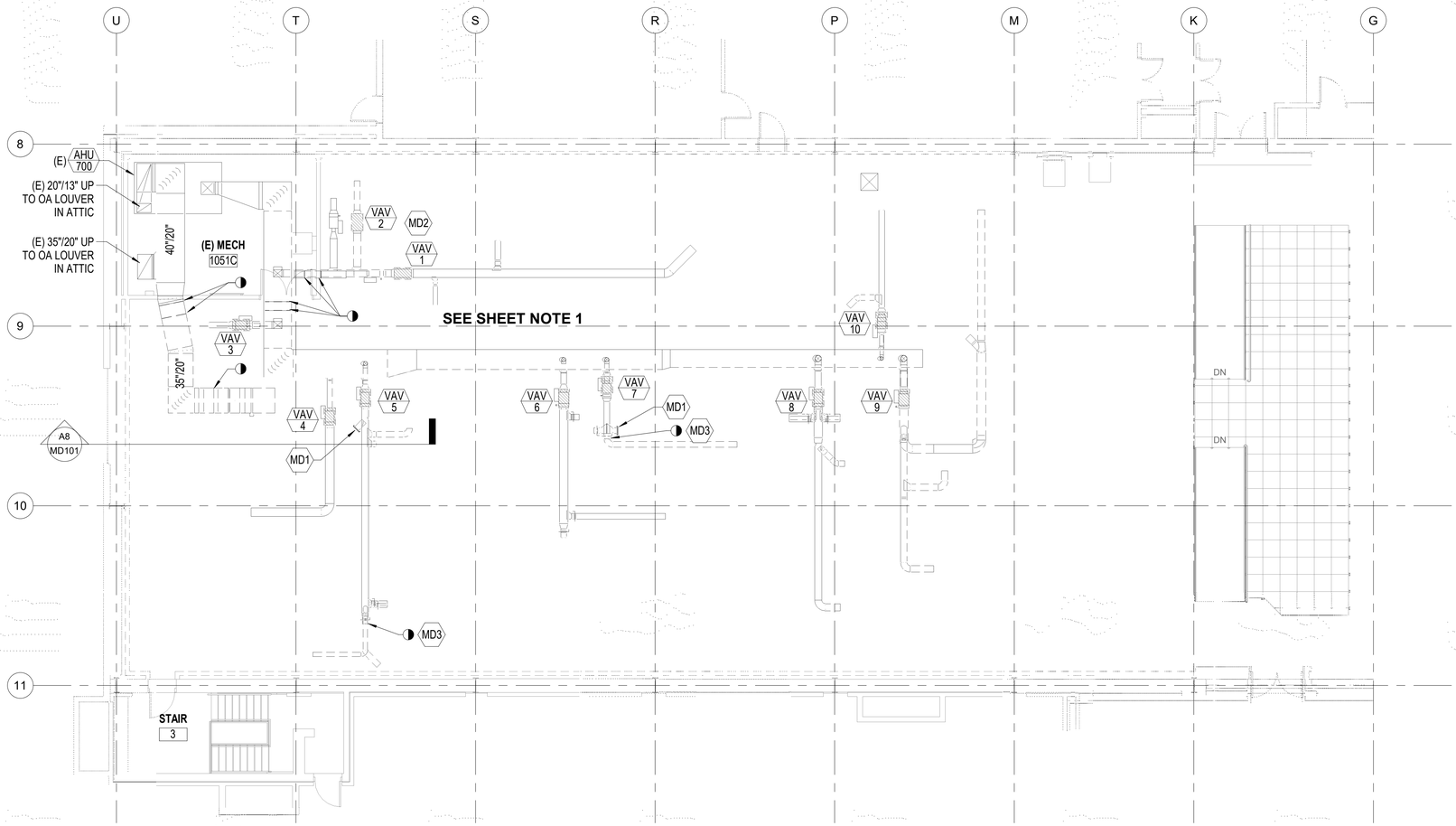

FIRST FLOOR MECHANICAL DEMOLITION PLAN

D8 1/8" = 1'-0"

0 4' 8' 16'

SHEET NOTES

1. DISCONNECT (E) MAIN DUCTS, VAV BOXES, AND ALL DUCTWORK ABOVE THE MEZZANINE. RETAIN FOR REINSTALLATION ABOVE THE NEW MEZZANINE.

2. PATCH HOLES IN MAIN DUCT AND SEAL PER SMACNA STANDARDS.M001.

MECHANICAL DEMOLITION KEYED NOTES

MARK	NOTE
MD1	CAP (E) TAKE-OFF.
MD2	ALL (E) VAVs TO BE RAISED TO HIGHER ELEVATION AND REUSED.
MD3	DISCONNECT (E) DUCTWORK DOWN STREAM OF THIS POINT IN PREPARATION FOR NEW DUCTS.

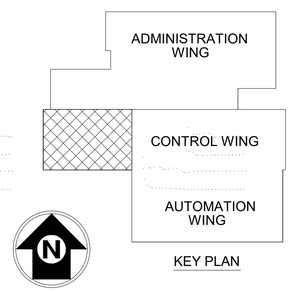

KEY PLAN

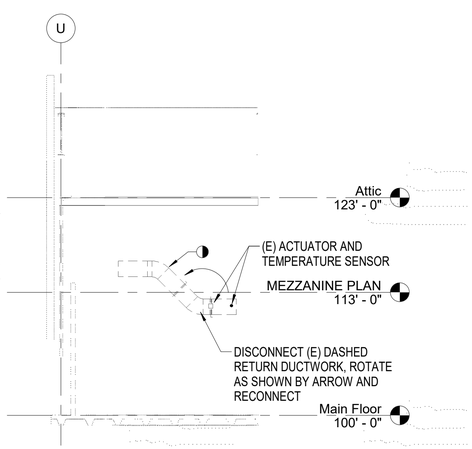

MECHANICAL DEMOLITION SECTION

A8 1/8" = 1'-0"

0 4' 8' 16'

LICENSED PROFESSIONAL ENGINEER
JOSIAH TROY SMALLEY
M 38465
MECHANICAL
STATE OF CALIFORNIA
EXPIRES: 09/30/2023

CLH ARCHITECTS ENGINEERS
Case, Lowe & Hart, Inc. 2484 Washington Blvd. Suite 510 Ogden, Utah 84401-2346 801.399.5821 www.clhac.com

E-Corp
BUILDING A WORLD OF DIFFERENCE

REV	APPROVED DATE	DESCRIPTION	JCN	REDLINE DATE	APVD

DEPARTMENT OF TRANSPORTATION
FEDERAL AVIATION ADMINISTRATION
ATO - TECHNICAL OPERATIONS WESTERN SERVICE AREA

ARTCC
RECONFIGURE M1 ROOM

MECHANICAL DEMOLITION PLAN

PALMDALE LOS ANGELES CTR CA

REVIEWED BY	SUBMITTED BY: ART GAPASIN, PROJECT ENGINEER		APPROVED BY: DARYL KITCHEN, MGR. ENGINEERING - LA
DESIGNED MTS	ISSUED BY: ENGINEERING SERVICES ENROUTE/FSS	DATE 02.04.2021	JCN 1004394
DRAWN GM, JAC		DRAWING NO ZLA-D-ARTCC- MD101	REV
CHECKED MTS			

15530

2/4/2022 11:34:13 AM

AIR HANDLING UNIT SCHEDULE

MARK	MANUFACTURER & MODEL	LOCATION	SERVICE	WEIGHT (LBS)	SUPPLY AIR FAN						CHILLED WATER COIL												HOT WATER COIL									FILTER SECTION											NOTES
					AIRFLOW CFM	MIN OA CFM	ESP (W.G.)	FAN RPM	BHP	MOTOR HP	CAPACITY		EAT		LAT		EWT (°F)	LWT (°F)	GPM	ROWS	APD IN W.G.	WPD FT W.G.	EAT (°F)	LAT (°F)	EWT (°F)	LWT (°F)	GPM	CAPACITY MBH	ROWS	APD IN W.G.	WPD FT W.G.	TYPE	INITIAL APD IN W.G.	FINAL APD IN W.G.	TYPE	INITIAL APD IN W.G.	FINAL APD IN W.G.	VOLT/ PHASE	HZ	FLA	LRC	
											SENS.	TOTAL	DB (°F)	WB (°F)	DB (°F)	WB (°F)																										
(E) AHU-700	MCQUAY VISION	1007	1ST FL. CONTROL WING	-	5460	1654	2	1750	8.09	10	235	245	86	63	50	49	45	55	50	6	0.95	6.7	31	96	180	160	13	158	1	0.05	3.1	30% PRE	0.63	1	65%	0.77	1.2	480/3	60	12.9	106	1, 2
AHU-206	TEMTROL ITF	ATTIC	DSR EXPANSION AREA	2000	2000	200	1.2	1750	2.7	3		60	78		50		45	55	12				36	90	180	160	1.7	17	1			30% PRE		1	30%	0.28	0.901	480	60	--	--	3, 4

NOTES:
1. INTERNAL STATIC PRESSURE SHALL INCLUDE OUTDOOR AIR LOUVER WITH BIRD SCREEN, OUTDOOR AND RETURN AIR DAMPERS, PRE- AND MAIN FILTERS, AND HEATING AND CHILLED WATER COILS.
2. MCQUAY VISION, DRAW-THROUGH, DANFOSS VFD, PREMIUM EFF. MOTOR (91.7%)
3. CUSTOM MADE TO MEET SPECIFICATIONS, WITH LOW FREQUENCY SOUND REDUCTION FOR QUIET OPERATION. PROVIDE WITH PREMIUM EFFICIENCY MOTOR (INVERTER RATED) AND VARIABLE FREQUENCY DRIVE (VFD) WITH BYPASS, ABB-ACH550.
4. AHU-206 SHALL BE CONSTRUCTED AS SEPARATE MODULES (DEMOUNT) SO IT CAN BE BROUGHT INTO M1 ATTIC WHICH HAS LIMITED ACCESS.

DUCT SEALING & INSULATION R-VALUE SCHEDULE

DUCT TYPE	DUCT LOCATION		SEAL CLASS
	EXTERIOR	UNCONDITIONED SPACE	
SUPPLY	R-8	R-6	A
RETURN	R-8	R-6	A
EXHAUST	NONE	NONE	A

NOTES:
1. FOR THE INSULATION AS INSTALLED AND DO NOT INCLUDE AIR FILM RESISTANCE.
2. PRESSURE SENSITIVE TAPE SHALL NOT BE USED AS THE PRIMARY SEALANT, UNLESS IT HAS BEEN CERTIFIED TO COMPLY WITH UL-181A OR UL-181B BY AN INDEPENDENT TESTING LAB AND THE TAPE IS USED IN ACCORDANCE WITH THAT CERTIFICATION.
3. SEAL CLASS A: SEAL TRANSVERSE JOINTS, LONGITUDINAL SEAMS, & DUCT WALL PENETRATIONS

VAV TERMINAL SCHEDULE

MARK	CONDITION	MANUFACTURER & MODEL	VAV SYSTEM SERVICE	SERVES ROOMS(S)	INLET SIZE (IN)	NOMINAL CFM RANGE	DESIGN MAX CFM (COOLING)	DESIGN MIN CFM (HEATING)	DISCH NC WIDE OPEN	W.O. ΔPs	HOT WATER HEATING COIL							NOTES
											MBH	GPM	WPD MAX ("H20)	COIL CONN. (IN)	EAT (°F)	LAT (°F)	ROWS	
VAV-1	EXISTING, NEW CFM	TITUS DESV	AHU-700	1051E, 1051F, 1051G, 1051Q	7	70-650	650	173	28	0.7	6.6	1.0	2.0	1/2	53	92.8	1	SOUND ATTENUATOR
VAV-2	EXISTING, NEW CFM	TITUS DESV	AHU-701	1051D	5	40-350	175	40	25	0.7	1.6	1.0	2.0	1/2	53	95.1	1	SOUND ATTENUATOR
VAV-3	EXISTING, NEW CFM	TITUS DESV	AHU-702	1051B	5	40-350	150	40	25	0.7	1.4	1.0	2.0	1/2	53	95.1	1	SOUND ATTENUATOR
VAV-4	EXISTING, NEW CFM	TITUS DESV	AHU-703	1051A	7	70-650	520	114	28	0.7	4.8	1.0	2.0	1/2	53	95.1	1	SOUND ATTENUATOR
VAV-5	EXISTING	TITUS DESV	AHU-704	1051N	8	90-900	780	252	28	0.7	7.9	1.0	2.0	1/2	53	90.0	1	SOUND ATTENUATOR
VAV-6	EXISTING	TITUS DESV	AHU-705	1051M	9	120-1050	780	213	28	0.7	7.8	1.0	2.0	1/2	53	90.1	1	SOUND ATTENUATOR
VAV-7	EXISTING	TITUS DESV	AHU-706	1051Q	7	70-650	350	132	25	0.7	4.2	1.0	2.0	1/2	53	90.0	1	SOUND ATTENUATOR
VAV-8	EXISTING	TITUS DESV	AHU-707	1051J, 1051K, 1051L, 1051O	7	70-650	630	212	25	0.7	6.7	1.0	2.0	1/2	53	90.0	1	SOUND ATTENUATOR
VAV-9	EXISTING	TITUS DESV	AHU-708	1051	10	145-1400	1000	390	28	0.7	10.3	1.0	2.0	1/2	53	90.0	1	SOUND ATTENUATOR
VAV-10	EXISTING	TITUS DESV	AHU-709	1051H, 1051I, 1051O	6	45-500	455	88	25	0.7	2.8	1.0	2.0	1/2	53	90.0	1	SOUND ATTENUATOR

MECHANICAL LEGEND

SYMBOL	DESCRIPTION
L	LIQUID REFRIGERANT
S	SUCTION REFRIGERANT
OR	MANUAL VOLUME CONTROL DAMPER
OR	EXHAUST AIR DUCT - UP / DOWN
OR	RETURN/OUTSIDE AIR DUCT - UP / DOWN
OR	SUPPLY AIR DUCT - UP / DOWN
	MITERED ELBOW W/ TURNING VANES
OR	FLEX DUCT (MAX. LENGTH 4 FT.)
	BLIND FLANGE OR CAP
	PIPING DOWN
	PIPING UP
	PIPING TEE DOWN
	FLANGE
	UNION
	PUMP
T	THERMOSTAT
	EQUIPMENT SYMBOL
DET# SHT#	DETAIL SYMBOL
XX	SHEET KEYNOTE
	POINT OF CONNECTION
	POINT OF DISCONNECTION
	AIRFLOW DIRECTION
AFF	ABOVE FINISH FLOOR
(E)	EXISTING
N.I.C.	NOT IN CONTRACT
N.O.	NORMALLY OPEN
N.C.	NORMALLY CLOSED
TYP	TYPICAL

MECHANICAL GENERAL NOTES:

1. ALL EQUIPMENT MANUFACTURERS SHOWN AS A BASIS OF DESIGN. NOT INTENDED TO SOLE SOURCE EQUIPMENT MANUFACTURER.

2. ALL EQUIPMENT SHALL BE INSTALLED IN ACCORDANCE WITH THE LATEST STATE ADOPTED EDITION OF THE INTERNATIONAL MECHANICAL CODE AND SMACNA.

3. MECHANICAL PLANS ARE DIAGRAMMATIC ONLY. CONTRACTOR SHALL COORDINATE THEIR WORK WITH OTHER TRADES AND ACTUAL JOB SITE CONDITIONS. CONTRACTOR TO FIELD VERIFY QUANTITIES AND DIMENSION.

4. CONTRACTOR TO PROVIDE ALL NECESSARY MATERIALS, DUCTWORK, HANGERS, FITTINGS, OFFSETS, INSULATION AND ACCESSORIES LOGICALLY REQUIRED FOR A COMPLETE FUNCTIONAL AIR DELIVERY SYSTEM.

5. DUCT DIMENSIONS ON DRAWING ARE INSIDE DIMENSIONS. MINIMUM DUCTWORK GAUGE TO BE 26 GUAGE.

6. CONTRACTOR SHALL COORDINATE ALL SUPPLY DIFFUSER PLACEMENTS.

7. ALL SQUARE ELBOWS IN SUPPLY AND RETURN DUCTWORK SHALL HAVE SINGLE THICKNESS TURNING VANES.

8. INSULATED FLEXIBLE DUCT NOT TO EXCEED 4 FEET IN LENGTH.

9. CONNECTIONS TO SUPPLY DIFFUSERS TO BE MADE WITH A RIDGED CONNECTION SO THAT CLEAR AND UNOBSTRUCTED AIRLFLOW IS ACHIEVED.

10. MOUNT BOTTOM OF THERMOSTAT 48 INCHES ABOVE FINISHED FLOOR. RUN WIRING FROM THERMOSTAT LOCATION TO AIR HANDLER AND TERMINATE TO PROVIDE FOR A FULLY FUNCTIONAL SYSTEM.

11. CONTRACTOR TO FURNISH FILTERS.

12. CONTRACTOR TO FURNISH AND INSTALL CONDENSATE P-TRAP ON ALL NEW AIR HANDLERS PER DETAILS SHOWN ON DRAWINGS.

13. ALL PIPING THAT COMES IN CONTACT WITH A DISSIMILAR METAL TO BE PROTECTED AGAINST GALVANIC CORROSION.

14. REMOTE CONCEALED CEILING CABEL CONTROL SYSTEM REQUIRED FOR ALL MANUAL VOLUME DAMPERS IN HARD LID CEILING APPLICATIONS.

15. SEISMIC SUPORTS ARE NOT REQUIRED FOR HVAC DUCTWORK IF DUCTS ARE SUSPENDED FROM HANGERS 12 INCH OR LESS IN LENGTH.

16. REFER TO STRUCTURAL DETAILS FOR ALL EQUIPMENT AND DUCT PENETRATIONS THROUGH ROOF. IF DETAIL IS NOT PRESENT THEN CONTACT ENGINEER.

17. ALL EXPOSED DUCTWORK TO HAVE ALL LABELS AND WRITING REMOVED FROM DUCT.

18. AFTER AIR AND HYDRONIC SYSTEM BALANCING HAS BEEN COMPLETED, MARK ALL BALANCING DAMPER AND BALANCING VALVES TO PERMANENTLY INDICATE FINAL POSITION; IE AN ARROW OR DRAWING AN OUTLINE OF BALANCING HANDLE POSTION.

19. FIELD VERIFY EQUIPMENT, DUCTWORK AND PIPING SIZES PRIOR TO START OF WORK. COORDINATE INSTALLATION WITH LOCATION OF EXISTING PIPING, DUCTWORK, CONDUITS, STRUCTURE AND OTHER EXISTING EQUIPMENT.

20. INSTALLATION SHALL PROVIDE READY ACCESS TO DAMPERS, COILS AND OTHER DEVICES. ACCESS DOORS SHALL BE INSTALLED TO PROVIDE ADEQUATE CLEARANCES FOR DIRECT ACCESS.

21. DESIGNATE A PERSON TO BE RESPONSIBLE FOR FIRE PROTECTION DURING WELDING OR CUTTING OPERATIONS. PROVIDE TEMPORARY FIRE EXTINGUISHERS AND FIRE WATCH DURING CONSTRUCTION. COORDINATE WELDING WORK W/C.O.R. AS REQUIRED BY DIVISION SPECIFICATIONS.

22. FOR SUPPORT AND VIBRATION ISOLATION OF EQUIPMENT, DUCTWORK AND PIPING SEE SPECIFICATIONS AND DRAWINGS.

23. EQUIPMENT SHALL BE INSTALLED PER MANUFACTURER'S RECOMMENDATIONS AND INSTRUCTIONS.

24. SUPPLY AIR DUCTWORK SHALL BE INSULATED. FOR INSULATION REQUIREMENTS, REFER TO SPECIFICATION.

25. PROVIDE FIRE RATED SEALANT AT PIPE PENETRATIONS AND ABANDONED HOLES THROUGH FIRE RATED ASSEMBLIES. RATING OF SEALANT SHALL BE EQUAL TO OR EXCEED RATING OF FIRE RATED ASSEMBLY. PROVIDE UL APPROVED FIRE RATED SEALANT.

26. ELECTRICAL DEMOLITION AND INSTALLATION SHALL BE IN ACCORDANCE WITH ELECTRICAL DRAWINGS AND DIVISION 16 SPECIFICATIONS. PROVIDE SEISMIC RESTRAINTS AND VIBRATION ISOLATION FOR NEW EQUIPMENT, DUCTWORK, AND PIPING PER DIVISION 23 SPECIFICATION, "VIBRATION AND SEISMIC CONTROLS FOR HVAC".

27. LOCATIONS, SIZES, CLEARANCES AND CONFIGURATIONS OF EQUIPMENT SHOWN ARE BASED ON SPECIFIC SCHEDULED MANUFACTURERS AND MODEL NUMBERS. SUBSTITUTION OF SUCH EQUIPMENT MANUFACTURERS WILL REQUIRE THE CONTRACTOR'S PRIOR VERIFICATION OF CONFORMANCE PER THE REQUIREMENTS OF LOCATION, SIZE CLEARANCES AND CONFIGURATION AS COMPARED TO THE SPACE ALLOCATED TO HOUSE THE SPECIFIC EQUIPMENT. CONTRACTOR SHALL RESUBMIT THE PROPOSED EQUIPMENT TO THE CONTRACTING OFFICER TECHNICAL REPRESENTATIVE (COR) FOR APPROVAL, PRIOR TO INSTALLATION. THE CONTRACTOR SHALL BE RESPONSIBLE FOR ANY ADDITIONAL WORK, MATERIALS, ETC. REQUIRED AS A RESULT OF SUBSTITUTIONS. THE CONTRACTOR SHALL NOT BE COMPENSATED FOR ADDITIONAL COST OR TIME RESULTING FROM THE SUBSTITUTION OF MATERIALS OR EQUIPMENT.

28. FACILITY CONTAINS HAZARDOUS MATERIALS.

29. ALL DIMENSIONS ARE IN INCHES UNLESS OTHERWISE NOTED.

30. ALL AIRFLOW RATES SHOWN (CFM) ARE ACTUAL AIRFLOWS (ADJUSTED FOR ELEVATION).

31. DESIGN AND PROVIDE MINIMUM VENTILATION AS FOLLOWS DURING ALL PHASES OF CONSTRUCTION: 12,000 CFM (INDUSTRIAL VENTILATION FAN) AT 3" EXTERNAL STATIC PRESSURE. USE EXISTING WEST LOUVERS (EAST END) FOR EXHAUST. REMOVE TEMPORARY VENTILATION AND BLANK OFF LOUVERS AFTER COMPLETION OF CONSTRUCTION. PROVIDE ADDITIONAL VENTILATION IF REQUIRED FOR SPECIFIC ACTIVITIES CREATING ODORS, DUST, OR HAZARDOUS FUMES.

32. ALL EXISTING STRUCTURAL AND MISCELLANEOUS STEEL AND GRATINGS CONTAIN LEAD PAINT, APPROXIMATELY 60%. REFER TO SPECIFICATION SECTION 028050, "LEAD COATING WORK PRACTICES" FOR MORE INFORMATION.

GRILLE, REGISTER & DIFFUSER SCHEDULE

MARK	MANUFACTURER & MODEL	DESCRIPTION	MATERIAL	FINISH	FRAME	MAX NC	MAX CFM	NECK SIZE	MODULE SIZE	QTY	NOTES
CD-1	TITUS TMS	CEILING DIFFUSER	STEEL	#26 WHITE	LAY-IN	15	152	6	24x24	12	3 CONE FACE
CD-2	TITUS TMS	CEILING DIFFUSER	STEEL	#26 WHITE	LAY-IN	20	289	8	24x24	17	3 CONE FACE
CD-3	TITUS TMS	CEILING DIFFUSER	STEEL	#26 WHITE	LAY-IN	20	534	12	24x24	4	3 CONE FACE
RG-1	TITUS 50NT	RETURN GRILLE	STEEL	#26 WHITE	LAY-IN	N/A	N/A	N/A	24x24	18	1/2" SQUARE EGG CRATE

IN-LINE SUPPLY FAN SCHEDULE

MARK	MANUFACTURER & MODEL	DESCRIPTION	AREA SERVED	CFM	STATIC PRESS. (IN WC)	RPM	SOUND RATING (dBA)	ELECTRICAL		WEIGHT (LBS)	NOTES
								HP	VOLTS/ PHASE		
SF-1	GREENHECK CSP-A390	IN-LINE	FLIGHT DATA RACK	350	1/4	1350	41	0.07	115/1	23	1

NOTES:
1. LOCATED BELOW THE RAISED FLOOR IN THE CONTROL ROOM.

REV	APPROVED DATE	DESCRIPTION	JCN	REDLINE DATE	APVD

DEPARTMENT OF TRANSPORTATION
FEDERAL AVIATION ADMINISTRATION
ATO - TECHNICAL OPERATIONS — WESTERN SERVICE AREA

ARTCC
RECONFIGURE M1 ROOM

MECHANICAL LEGEND, NOTES AND SCHEDULES

PALMDALE — LOS ANGELES CTR — CA

LICENSED PROFESSIONAL ENGINEER — JOSIAH TROY SMALLEY — M 38465 — MECHANICAL — STATE OF CALIFORNIA — EXPIRES: 09/30/2023

CLH ARCHITECTS ENGINEERS
Case, Lowe & Hart, Inc. 2484 Washington Blvd. Suite 510 Ogden, Utah 84401-2346 801.399.5821 www.clhac.com

E-Corp
BUILDING A WORLD OF DIFFERENCE

REVIEWED BY	SUBMITTED BY	APPROVED BY
	ART GAPASIN	DARYL KITCHEN
	PROJECT ENGINEER	MGR. ENGINEERING - LA

DESIGNED — Designer
DRAWN — Author
CHECKED — Checker
ISSUED BY: ENGINEERING SERVICES ENROUTE/FSS
DATE 02.04.2021 — JCN 1004394
DRAWING NO ZLA-D-ARTCC- M001 — REV

2/4/2022 11:33:53 AM 19530

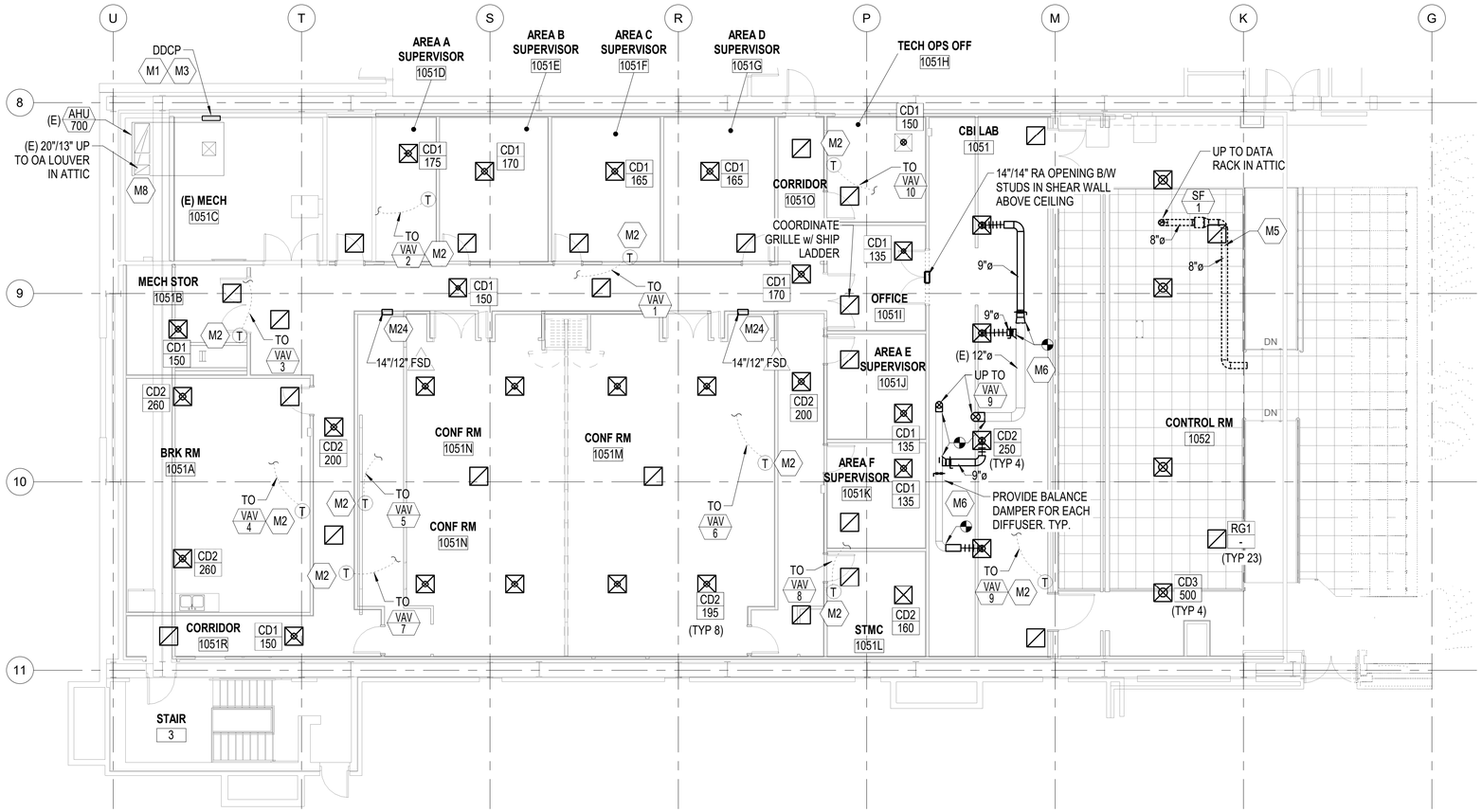

D8 FIRST FLOOR MECHANICAL PLAN

1/8" = 1'-0"

0 4' 8' 16'

MECHANICAL KEYED NOTES

MARK	NOTE (all notes may not appear on this sheet)
M1	FURNISH AND INSTALL NEW DDC CONTROL POINTS FOR VAV UNITS. RELOCATE AHU-700 PRESSURE SENSOR PD-2 TO NEW SHOWN LOCATION. SEE CONTROL DIAGRAMS AND DDCP POINT FUNCTION SCHEDULE FOR DETAILS. SEQUENCE OF OPERATIONS ARE PROVIDED IN MECHANICAL SPECIFICATIONS. VAV-1 THRU VAV-10 SERVE AHU-700.
M2	FURNISH AND INSTALL NEW THERMOSTATS. INTEGRATE NEW THERMOSTATS WITH EXISTING JCI DDC SYSTEM. THERMOSTATS ARE TO BE MOUNTED AT LEAST 4 FEET ABOVE FINISHED FLOOR. ACTUAL LOCATIONS SHALL BE COORDINATED WITH COR
M3	COORDINATE NEW DDCP DESIGNATION NUMBER WITH COR.
M4	RECONNECT DUCT WITH FLEXIBLE CONNECTION, SIZED TO MEET SEISMIC REQUIREMENTS. DUCTS ABOVE MECH 1051C SHALL BE SEISMICALLY BRACED FROM ABOVE. DUCTS ABOVE THE MEZZANINE SHALL BE SEISMICALLY BRACED FROM BELOW.
M5	THIS EXHAUST DUCT LINE IS LOCATED BELOW THE RAISED FLOOR. PENETRATE THE WALL UNDERNEATH THE CENTER OF THE RAMPS WITH AN 8" DIA DUCT. SEAL THE PENETRATION TO MINIMIZE AIR FLOW THROUGH THE WALL. FURNISH AND INSTALL AN INLINE FAN SET AT 350CFM 6-10FT FROM THE END OF THE DUCTLINE. COORDINATE THE LOCATION OF THE FLIGHT DATA RACK WITH THE COR TO DETERMINE THE FINAL END POINT OF THIS DUCTLINE.
M6	DUCTWORK SHOWN IS LOCATED ABOVE THE FIRST FLOOR ACOUSTIC CEILING.
M7	CLEAN ENTIRE RETURN AIR, OUTSIDE AND SUPPLY AIR DUCT RUNS BACK TO (E) AHU-700.
M8	REBALANCE AND REPROGRAM RETURN AIR AND OUTSIDE AIR TO THE NEW CFM VALUES.
M9	EXTEND CONTROL, POWER, AND CONDUIT FOR RETURN AIR CONTROL DAMPER ACTUATOR.
M10	AFMS-1 SHALL BE 6" ALUMINUM LO-FLO PITOT TRAVERSE STATION MFD BY AIR MONITOR CORP.
M11	ROUTE DUCT AS HIGH AS POSSIBLE AND PROVIDE TRANSITIONS TO MISS OBSTRUCTIONS, TYP ALL DUCT.
M12	PROVIDE RETURN AIR GRILLE IN WALL AND AIRTIGHT SEAL AT WALL PENETRATION. COORDINATE WITH GWB FRAMING.
M13	DISCONNECT EXISTING RETURN DUCT AT UPPER 45° ELBOW AND ROTATE135°. EXISTING RETURN AIR CONTROL DAMPER AND ACTUATOR TO BE RELOCATED WITH THE DUCT. SEISMIC BRACING REQUIRED FOR DUCT FROM MEZZANINE TO FLEXIBLE CONNECTION.
M14	COORDINATE WITH GWB FRAMING TO FRAME AROUND DUCT. SEAL DUCT PENETRATION TO WALL.
M15	COORDINATE AHU-206 LOCATION FOR MAINTENANCE ACCESS AND COIL REMOVAL ACCESS.
M16	PROVIDE GRAVITY SUPPORTS & SEISMIC BRACING OF UNIT IN ATTIC. PROVIDE STAMPED ENGINEERING DESIGN COORDINATED WITH MANUFACTURERS SEISMIC CERTIFICATION.
M17	FURNISH AND INSTALL PIPING AS SHOWN. SPECIFIC LOCATIONS OF PIPE LAYOUT SHALL BE SUBMITTED FOR APPROVAL TO THE COR. SHOP DRAWINGS SHALL BE REQUIRED FOR PIPE ARRANGEMENT. INSTALL AND INSULATE ALL PIPING PER MECHANICAL SPECIFICATIONS.
M18	PIPING SHOWN ARE LOCATED ON NEW MEZZANINE DECK.
M19	REFER TO DETAIL F2/M501 VAV RE-HEAT COIL CONNECTION DETAIL.
M20	AHU-206 AND ASSOCIATED PIPING SHALL BE SUPPORTED FROM ROOF STRUCTURE. PROVIDE NECESSARY SEISMIC BRACING AND VIBRATION ISOLATION.
M21	PIPING AT AHU SHALL BE PER DETAIL B5/M501 FOR HOT WATER & DETAIL B8/M501 FOR COLD WATER. USE 1" PIPE SIZE FOR HOT WATER MANIFOLD PIPING AND 1-1/4" FOR CHILLED WATER MANIFOLD PIPING. USE 1/2" CONTROL VALVE & 1/2" BALANCE VALVE (cv=2.5 FOR BALANCE VALVE) FOR HOT WATER. USE 3/4" CONTROL VALVE & 1" BALANCE VALVE (cv=2.5 FOR BALANCE VALVE) FOR CHILLED WATER.
M22	PROVIDE U.L. RATED FIRE STOPPING MATERIAL OR ASSEMBLY AT PIPE PENETRATION IN WALL ON GRIDLINE 'M'.
M23	TIE INTO AND EXTEND DRAIN PAN TO NEW LINE GRIDLINE 'M' WALL. NEW DRAIN PAN SHALL BE 18g STAIN LESS STEEL PROVIDE CONNECTION TO EXISTING DRAIN PAN SO THAT EXISTING AND NEW SECTION FORM ONE NEW WATERPROOF DRAIN PAN. SLOPE TO EXISTING DRAIN PAN. PROVIDE TRACETEK TT1000 X 25 FEET LONG SENSING CABLE WITH CONNECTOR KIT; CONNECT TO EXISTING LEAK DETECTION CABLE IN EXISTING DRAIN PAN.
M24	INSTALL FIRE / SMOKE DAMPER AS REQUIRED PER SMACNA AND NFPA LOCATE B/W STUDS.
M25	DUCTWORK EAST OF GRIDLINE 'M' REQUIRES SEISMIC BRACING.
M26	CUT HOLE IN PLATE COVERING EXISTING LOUVER TO CONNECT OSA DUCT. SEAL PENETRATION.

SHEET NOTES

1. BALANCE NEW SUPPLY AIR DIFFUSERS TO CFM VALUES SHOWN ON THIS SHEET.
2. THE CONTRACTOR SHALL ENSURE THAT THE MANUFACTURER'S RECOMMENDATIONS FOR MECHANICAL EQUIPMENT CLEARANCES ARE MET.
3. INSTALL NEW CEILING DIFFUSERS. SEE MECHANICAL SCHEDULE FOR DIFFUSER INFORMATION. FLEX DUCT SHALL NOT EXCEED 6 FEET IN LENGTH AND SHALL BE THE SAME DIAMETER AS THE DIFFUSER NECK.
4. RETURN GRILLES SHALL BE 24"X24" EGG-CRATE GRILLES.
5. ALL DUCTWORK SHOWN IS TO BE INSTALLED ABOVE THE NEW MEZZANINE DECK AND WHERE INDICATED BETWEEN THE NEW MEZZANINE DECK AND THE NEW ACOUSTICAL CEILING. DUCTWORK CONSTRUCTION AND INSTALLATION SHALL COMPLY WITH THE MECHANICAL SPECIFICATIONS AND SMACNA STANDARDS. INSTALL 45DEG "BOOT" TRANSITIONS FOR ALL NEW DUCT TAKE-OFFS. SEISMICALLY BRACE ALL NEW DUCTWORK PER MECHANICAL SPECIFICATIONS.
6. ALL NEW DUCT DIMENSIONS SHOWN ARE CLEAR OPENING INSIDE LINING DIMENSIONS. WHERE INDICATED, DUCT LINER SHALL BE INSTALLED PER MECHANICAL SPECIFICATIONS. DUCT LINER IS 1" THICK.

LICENSED PROFESSIONAL ENGINEER
MOSIAH TROY SMALLEY
M 38465
MECHANICAL
STATE OF CALIFORNIA
EXPIRES: 09/30/2023

CLH ARCHITECTS ENGINEERS
Case, Lowe & Hart, Inc. 2484 Washington Blvd. Suite 510 Ogden, Utah 84401-2346 801.399.5821 www.clhae.com

E-Corp
BUILDING A WORLD OF DIFFERENCE

REV	APPROVED DATE	DESCRIPTION	JCN	REDLINE DATE	APVD

DEPARTMENT OF TRANSPORTATION
FEDERAL AVIATION ADMINISTRATION
ATO - TECHNICAL OPERATIONS — WESTERN SERVICE AREA

ARTCC RECONFIGURE M1 ROOM

FIRST FLOOR MECHANICAL PLAN

PALMDALE — LOS ANGELES CTR — CA

REVIEWED BY	SUBMITTED BY: ART GAPASIN, PROJECT ENGINEER	APPROVED BY: DARYL KITCHEN, MGR. ENGINEERING - LA
DESIGNED: MTS	ISSUED BY: ENGINEERING SERVICES ENROUTE/FSS	DATE: 02.04.2021 — JCN: 1004394
DRAWN: GM, JAC		DRAWING NO: ZLA-D-ARTCC- M101 — REV
CHECKED: MTS		

2/8/2022 7:52:32 AM
16530

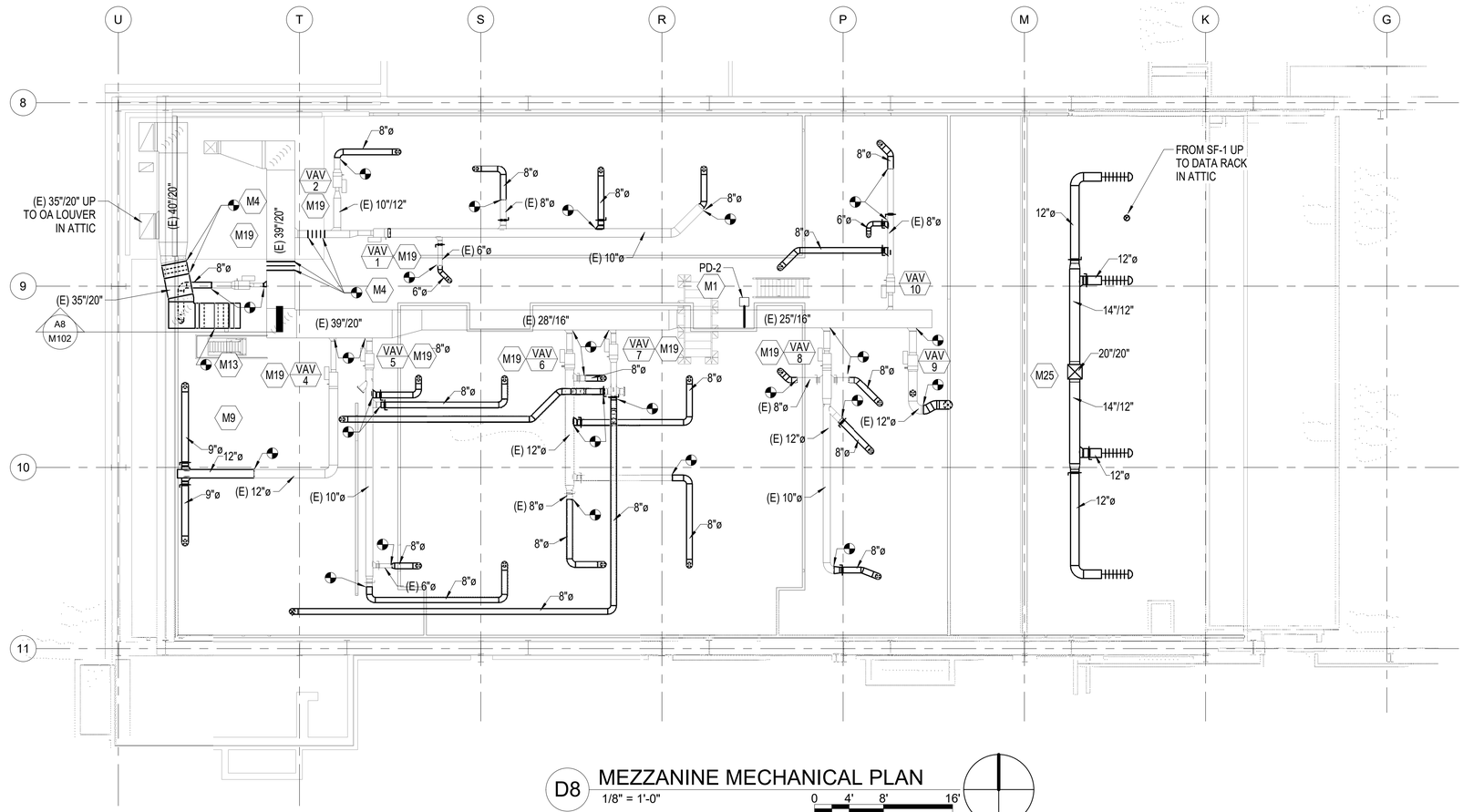

D8 MEZZANINE MECHANICAL PLAN

1/8" = 1'-0"

0 4' 8' 16'

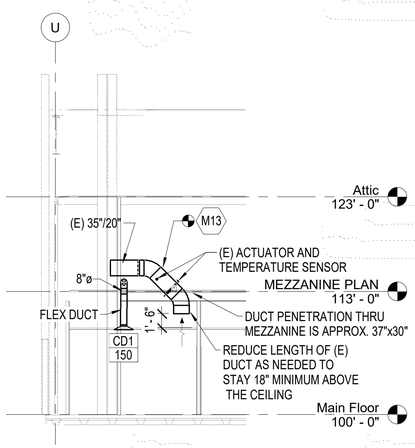

A8 MECHANICAL SECTION AT EXISTING RETURN AIR DUCT

1/8" = 1'-0"

0 4' 8' 16'

SHEET NOTES

1. RE-INSTALL (E) VAV BOXES ABOVE NEW MEZZANINE DECK.

2. INSTALL VAV BOXES AS CLOSE TO ORIGINAL LOCATIONS AS POSSIBLE TO MINIMIZE RELOCATING HOT WATER PIPING.

3. CONNECT VAV BOX INLETS TO SIDE OF MAIN DUCT.

4. MAINTAIN 2.5 DUCT DIA. DISTANCE B/W MAIN DUCT AND VAV BOX INLET. (RELOCATE HW PIPING IF NECESSARY.)

5. SUPPORT VAV BOXES AND DUCTWORK FROM THE HARD DECK BELOW, CLOSE ENOUGH TO MINIMIZE SEISMIC BRACING.

6. FOR SYMBOLS AND ABBREVIATIONS SEE DRAWING M001

7. MAKE FINAL LOCATIONS FOR NEW INSTALLATIONS WHERE INDICATED. WHERE ARCHITECTURAL FEATURES OR OTHER ITEMS CONFLICT WITH INSTALLATION, NOTIFY COR FOR A DETERMINATION OF FINAL LOCATION.

8. HWS, HWR, CWS, AND CWR TO M1 ROOM HAS BEEN SHUT OFF AT ISOLATION VALVES.

9. HWS, HWR PIPING FOR NEW VAV'S 5-10 HAS BEEN INSTALLED. SUPPORTS AND HANGERS NEED TO BE FIELD VERIFIED, INSERTS AND SHIELDS FOR HANGERS NEED TO BE FIELD VERIFIED. ALL HANGERS AND SUPPORTS NEED TO BE TIGHTENED AND VERIFIED.

10. BOTTOM OF PIPE DROPS FOR VAV'S NEED TO BE BRACED, LATERAL (BUT NOT VERTICAL) SEISMIC RESTRAINT. VAV SUPPORTS MAY BE USED TO CONNECT THE RESTRAINT, OR USE OTHER MEANS.

11. THE CONTRACTOR SHALL ENSURE THAT THE MANUFACTURER'S RECOMMENDATIONS FOR MECHANICAL EQUIPMENT CLEARANCES ARE MET.

12. ALL DUCTWORK SHOWN IS TO BE INSTALLED ABOVE THE NEW MEZZANINE DECK AND WHERE INDICATED BETWEEN THE NEW MEZZANINE DECK AND THE NEW ACOUSTICAL CEILING. DUCTWORK CONSTRUCTION AND INSTALLATION SHALL COMPLY WITH THE MECHANICAL SPECIFICATIONS AND SMACNA STANDARDS. INSTALL 45DEG "BOOT" TRANSITIONS FOR ALL NEW DUCT TAKE-OFFS. SEISMICALLY BRACE ALL NEW DUCTWORK PER MECHANICAL SPECIFICATIONS.

13. VEER FLEX PIPING HAS BEEN INSTALLED ON NEW VAV'S. SUPPORTS AND BRACING FOR VEER FLEX PIPING NEED TO BE CHECKED FOR PROPER INSTALLATION.

14. SEE APPROVED PIPING MECHANICAL SHOP DRAWINGS IN SUBMITTAL.

15. VAV'S 5-10 HAVE BEEN INSTALLED BUT NOT SEISMICALLY BRACED.

16. NO INSULATION FOR PIPING HAS BEEN INSTALLED.

17. INSULATION THAT WAS REMOVED ON PIPING TO CONNECT NEW PIPING SHALL BE REINSTALLED NEW.

18. COORDINATE DUCT PENETRATIONS IN MEZZANINE WITH STRUCTURE SO THAT DUCTS PASS BETWEEN JOISTS.

19. DUCT OPENINGS FOR INSULATED DUCTS TO INCLUDE 1" ALL AROUND CLEARANCE FOR INSULATION.

20.DUCT OPENINGS TO BE CUT BEFORE CEMENT BOARD IS PLACED.

21. DO NOT CUT DUCT PENETRATIONS ON LONGITUDINAL DECK SECTION SEAMS.

22. ALL NEW DUCT DIMENSIONS SHOWN ARE CLEAR OPENING INSIDE LINING DIMENSIONS. WHERE INDICATED, DUCT LINER SHALL BE INSTALLED PER MECHANICAL SPECIFICATIONS. DUCT LINER IS 1" THICK.

23. EXISTING VAV'S 1, 2, 3, & 4 SHALL BE SEISMICALLY BRACED.

24. PROVIDE DUCT SUPPORTS. SPACING PER SMACNA REQUIREMENTS. SEE DETAIL C2-M501.

MECHANICAL KEYED NOTES

MARK	NOTE (all notes may not appear on this sheet)
M1	FURNISH AND INSTALL NEW DDC CONTROL POINTS FOR VAV UNITS. RELOCATE AHU-700 PRESSURE SENSOR PD-2 TO NEW SHOWN LOCATION. SEE CONTROL DIAGRAMS AND DDCP POINT FUNCTION SCHEDULE FOR DETAILS. SEQUENCE OF OPERATIONS ARE PROVIDED IN MECHANICAL SPECIFICATIONS. VAV-1 THRU VAV-10 SERVE AHU-700.
M2	FURNISH AND INSTALL NEW THERMOSTATS. INTEGRATE NEW THERMOSTATS WITH EXISTING JCI DDC SYSTEM. THERMOSTATS ARE TO BE MOUNTED AT LEAST 4 FEET ABOVE FINISHED FLOOR. ACTUAL LOCATIONS SHALL BE COORDINATED WITH COR
M3	COORDINATE NEW DDCP DESIGNATION NUMBER WITH COR.
M4	RECONNECT DUCT WITH FLEXIBLE CONNECTION, SIZED TO MEET SEISMIC REQUIREMENTS. DUCTS ABOVE MECH 1051C SHALL BE SEISMICALLY BRACED FROM ABOVE. DUCTS ABOVE THE MEZZANINE SHALL BE SEISMICALLY BRACED FROM BELOW.
M5	THIS EXHAUST DUCT LINE IS LOCATED BELOW THE RAISED FLOOR. PENETRATE THE WALL UNDERNEATH THE CENTER OF THE RAMPS WITH AN 8" DIA DUCT. SEAL THE PENETRATION TO MINIMIZE AIR FLOW THROUGH THE WALL. FURNISH AND INSTALL AN INLINE FAN SET AT 350CFM 6-10FT FROM THE END OF THE DUCTLINE. COORDINATE THE LOCATION OF THE FLIGHT DATA RACK WITH THE COR TO DETERMINE THE FINAL END POINT OF THIS DUCTLINE.
M6	DUCTWORK SHOWN IS LOCATED ABOVE THE FIRST FLOOR ACOUSTIC CEILING.
M7	CLEAN ENTIRE RETURN AIR, OUTSIDE AND SUPPLY AIR DUCT RUNS BACK TO (E) AHU-700.
M8	REBALANCE AND REPROGRAM RETURN AIR AND OUTSIDE AIR TO THE NEW CFM VALUES.
M9	EXTEND CONTROL, POWER, AND CONDUIT FOR RETURN AIR CONTROL DAMPER ACTUATOR.
M10	AFMS-1 SHALL BE 6" ALUMINUM LO-FLO PITOT TRAVERSE STATION MFD BY AIR MONITOR CORP.
M11	ROUTE DUCT AS HIGH AS POSSIBLE AND PROVIDE TRANSITIONS TO MISS OBSTRUCTIONS, TYP ALL DUCT.
M12	PROVIDE RETURN AIR GRILLE IN WALL AND AIRTIGHT SEAL AT WALL PENETRATION. COORDINATE WITH GWB FRAMING.
M13	DISCONNECT EXISTING RETURN DUCT AT UPPER 45° ELBOW AND ROTATE135°. EXISTING RETURN AIR CONTROL DAMPER AND ACTUATOR TO BE RELOCATED WITH THE DUCT. SEISMIC BRACING REQUIRED FOR DUCT FROM MEZZANINE TO FLEXIBLE CONNECTION.
M14	COORDINATE WITH GWB FRAMING TO FRAME AROUND DUCT. SEAL DUCT PENETRATION TO WALL.
M15	COORDINATE AHU-206 LOCATION FOR MAINTENANCE ACCESS AND COIL REMOVAL ACCESS.
M16	PROVIDE GRAVITY SUPPORTS & SEISMIC BRACING OF UNIT IN ATTIC. PROVIDE STAMPED ENGINEERING DESIGN COORDINATED WITH MANUFACTURERS SEISMIC CERTIFICATION.
M17	FURNISH AND INSTALL PIPING AS SHOWN. SPECIFIC LOCATIONS OF PIPE LAYOUT SHALL BE SUBMITTED FOR APPROVAL TO THE COR. SHOP DRAWINGS SHALL BE REQUIRED FOR PIPE ARRANGEMENT. INSTALL AND INSULATE ALL PIPING PER MECHANICAL SPECIFICATIONS.
M18	PIPING SHOWN ARE LOCATED ON NEW MEZZANINE DECK.
M19	REFER TO DETAIL F2/M501 VAV RE-HEAT COIL CONNECTION DETAIL.
M20	AHU-206 AND ASSOCIATED PIPING SHALL BE SUPPORTED FROM ROOF STRUCTURE. PROVIDE NECESSARY SEISMIC BRACING AND VIBRATION ISOLATION.
M21	PIPING AT AHU SHALL BE PER DETAIL B5/M501 FOR HOT WATER & DETAIL B8/M501 FOR COLD WATER. USE 1" PIPE SIZE FOR HOT WATER MANIFOLD PIPING AND 1-1/4" FOR CHILLED WATER MANIFOLD PIPING. USE 1/2" CONTROL VALVE & 1/2" BALANCE VALVE (cv=2.5 FOR BALANCE VALVE) FOR HOT WATER. USE 3/4" CONTROL VALVE & 1" BALANCE VALVE (cv=2.5 FOR BALANCE VALVE) FOR CHILLED WATER.
M22	PROVIDE U.L. RATED FIRE STOPPING MATERIAL OR ASSEMBLY AT PIPE PENETRATION IN WALL ON GRIDLINE 'M'.
M23	TIE INTO AND EXTEND DRAIN PAN TO NEW LINE GRIDLINE 'M' WALL. NEW DRAIN PAN SHALL BE 18g STAIN LESS STEEL PROVIDE CONNECTION TO EXISTING DRAIN PAN SO THAT EXISTING AND NEW SECTION FORM ONE NEW WATERPROOF DRAIN PAN. SLOPE TO EXISTING DRAIN PAN. PROVIDE TRACETEK TT1000 X 25 FEET LONG SENSING CABLE WITH CONNECTOR KIT; CONNECT TO EXISTING LEAK DETECTION CABLE IN EXISTING DRAIN PAN.
M24	INSTALL FIRE / SMOKE DAMPER AS REQUIRED PER SMACNA AND NFPA LOCATE B/W STUDS.
M25	DUCTWORK EAST OF GRIDLINE 'M' REQUIRES SEISMIC BRACING.
M26	CUT HOLE IN PLATE COVERING EXISTING LOUVER TO CONNECT OSA DUCT. SEAL PENETRATION.

LICENSED PROFESSIONAL ENGINEER
MOSIAH TROY SMALLEY
M 38465
MECHANICAL
STATE OF CALIFORNIA
EXPIRES: 09/30/2023

CLH ARCHITECTS ENGINEERS
Case, Lowe & Hart, Inc. 2484 Washington Blvd. Suite 510 Ogden, Utah 84401-2346 801.399.5821 www.clhae.com

E-Corp
BUILDING A WORLD OF DIFFERENCE

REV	APPROVED DATE	DESCRIPTION	JCN	REDLINE DATE	APVD

DEPARTMENT OF TRANSPORTATION
FEDERAL AVIATION ADMINISTRATION
ATO - TECHNICAL OPERATIONS — WESTERN SERVICE AREA

ARTCC RECONFIGURE M1 ROOM

MEZZANINE MECHANICAL PLAN

PALMDALE — LOS ANGELES CTR — CA

REVIEWED BY	SUBMITTED BY: ART GAPASIN, PROJECT ENGINEER	APPROVED BY: DARYL KITCHEN, MGR. ENGINEERING - LA
DESIGNED: Designer	ISSUED BY: ENGINEERING SERVICES ENROUTE/FSS	DATE: 02.04.2021 — JCN: 1004394
DRAWN: Author		DRAWING NO: ZLA-D-ARTCC- M102 — REV
CHECKED: Checker		

2/4/2022 11:34:03 AM 16530

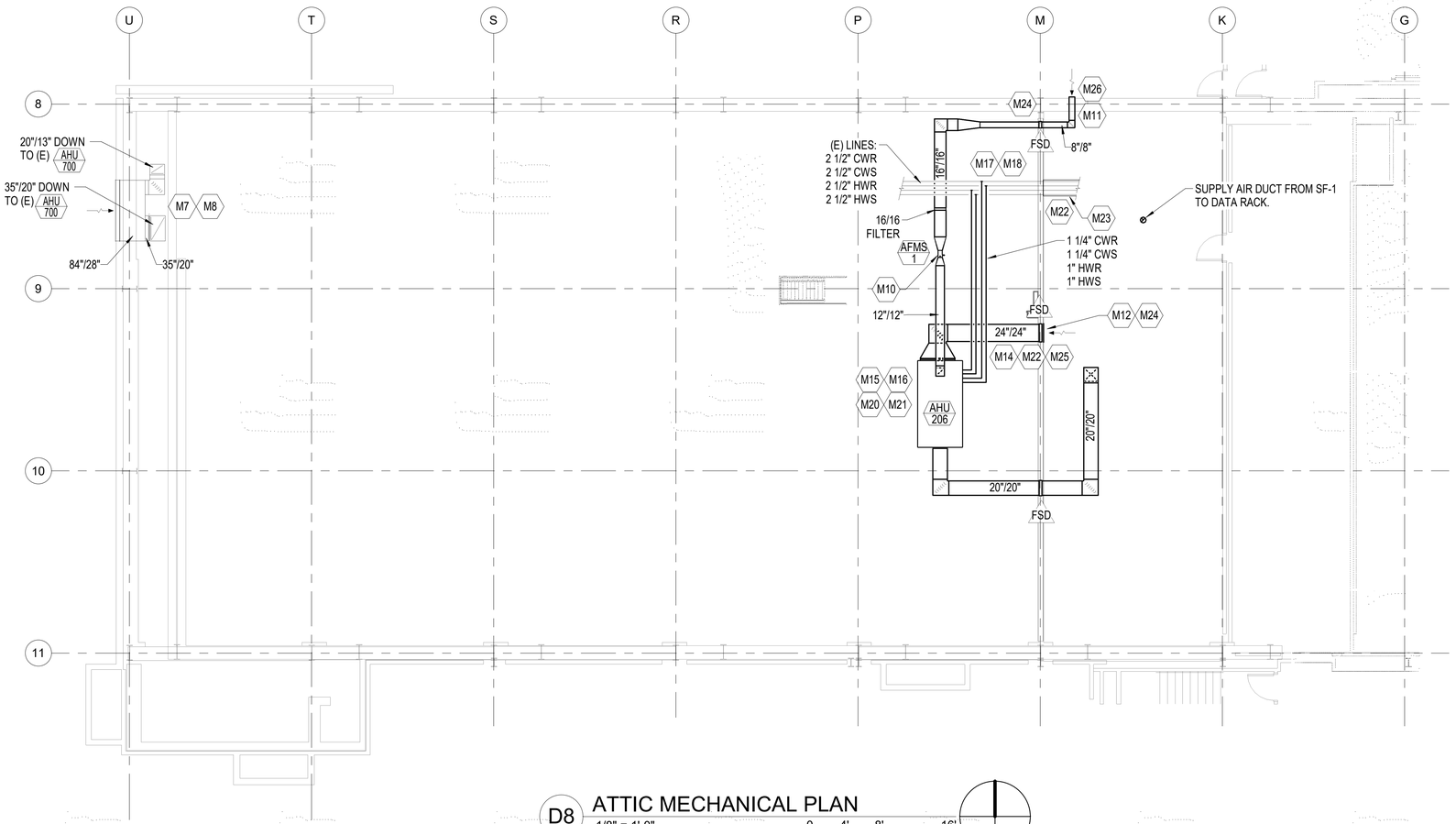

D8 ATTIC MECHANICAL PLAN

1/8" = 1'-0"

0 4' 8' 16'

MECHANICAL KEYED NOTES

MARK	NOTE (all notes may not appear on this sheet)
M1	FURNISH AND INSTALL NEW DDC CONTROL POINTS FOR VAV UNITS. RELOCATE AHU-700 PRESSURE SENSOR PD-2 TO NEW SHOWN LOCATION. SEE CONTROL DIAGRAMS AND DDCP POINT FUNCTION SCHEDULE FOR DETAILS. SEQUENCE OF OPERATIONS ARE PROVIDED IN MECHANICAL SPECIFICATIONS. VAV-1 THRU VAV-10 SERVE AHU-700.
M2	FURNISH AND INSTALL NEW THERMOSTATS. INTEGRATE NEW THERMOSTATS WITH EXISTING JCI DDC SYSTEM. THERMOSTATS ARE TO BE MOUNTED AT LEAST 4 FEET ABOVE FINISHED FLOOR. ACTUAL LOCATIONS SHALL BE COORDINATED WITH COR
M3	COORDINATE NEW DDCP DESIGNATION NUMBER WITH COR.
M4	RECONNECT DUCT WITH FLEXIBLE CONNECTION, SIZED TO MEET SEISMIC REQUIREMENTS. DUCTS ABOVE MECH 1051C SHALL BE SEISMICALLY BRACED FROM ABOVE. DUCTS ABOVE THE MEZZANINE SHALL BE SEISMICALLY BRACED FROM BELOW.
M5	THIS EXHAUST DUCT LINE IS LOCATED BELOW THE RAISED FLOOR. PENETRATE THE WALL UNDERNEATH THE CENTER OF THE RAMPS WITH AN 8" DIA DUCT. SEAL THE PENETRATION TO MINIMIZE AIR FLOW THROUGH THE WALL. FURNISH AND INSTALL AN INLINE FAN SET AT 350CFM 6-10FT FROM THE END OF THE DUCTLINE. COORDINATE THE LOCATION OF THE FLIGHT DATA RACK WITH THE COR TO DETERMINE THE FINAL END POINT OF THIS DUCTLINE.
M6	DUCTWORK SHOWN IS LOCATED ABOVE THE FIRST FLOOR ACOUSTIC CEILING.
M7	CLEAN ENTIRE RETURN AIR, OUTSIDE AND SUPPLY AIR DUCT RUNS BACK TO (E) AHU-700.
M8	REBALANCE AND REPROGRAM RETURN AIR AND OUTSIDE AIR TO THE NEW CFM VALUES.
M9	EXTEND CONTROL, POWER, AND CONDUIT FOR RETURN AIR CONTROL DAMPER ACTUATOR.
M10	AFMS-1 SHALL BE 6" ALUMINUM LO-FLO PITOT TRAVERSE STATION MFD BY AIR MONITOR CORP.
M11	ROUTE DUCT AS HIGH AS POSSIBLE AND PROVIDE TRANSITIONS TO MISS OBSTRUCTIONS, TYP ALL DUCT.
M12	PROVIDE RETURN AIR GRILLE IN WALL AND AIRTIGHT SEAL AT WALL PENETRATION. COORDINATE WITH GWB FRAMING.
M13	DISCONNECT EXISTING RETURN DUCT AT UPPER 45° ELBOW AND ROTATE135°. EXISTING RETURN AIR CONTROL DAMPER AND ACTUATOR TO BE RELOCATED WITH THE DUCT. SEISMIC BRACING REQUIRED FOR DUCT FROM MEZZANINE TO FLEXIBLE CONNECTION.
M14	COORDINATE WITH GWB FRAMING TO FRAME AROUND DUCT. SEAL DUCT PENETRATION TO WALL.
M15	COORDINATE AHU-206 LOCATION FOR MAINTENANCE ACCESS AND COIL REMOVAL ACCESS.
M16	PROVIDE GRAVITY SUPPORTS & SEISMIC BRACING OF UNIT IN ATTIC. PROVIDE STAMPED ENGINEERING DESIGN COORDINATED WITH MANUFACTURERS SEISMIC CERTIFICATION.
M17	FURNISH AND INSTALL PIPING AS SHOWN. SPECIFIC LOCATIONS OF PIPE LAYOUT SHALL BE SUBMITTED FOR APPROVAL TO THE COR. SHOP DRAWINGS SHALL BE REQUIRED FOR PIPE ARRANGEMENT. INSTALL AND INSULATE ALL PIPING PER MECHANICAL SPECIFICATIONS.
M18	PIPING SHOWN ARE LOCATED ON NEW MEZZANINE DECK.
M19	REFER TO DETAIL F2/M501 VAV RE-HEAT COIL CONNECTION DETAIL.
M20	AHU-206 AND ASSOCIATED PIPING SHALL BE SUPPORTED FROM ROOF STRUCTURE. PROVIDE NECESSARY SEISMIC BRACING AND VIBRATION ISOLATION.
M21	PIPING AT AHU SHALL BE PER DETAIL B5/M501 FOR HOT WATER & DETAIL B8/M501 FOR COLD WATER. USE 1" PIPE SIZE FOR HOT WATER MANIFOLD PIPING AND 1-1/4" FOR CHILLED WATER MANIFOLD PIPING. USE 1/2" CONTROL VALVE & 1/2" BALANCE VALVE (cv=2.5 FOR BALANCE VALVE) FOR HOT WATER. USE 3/4" CONTROL VALVE & 1" BALANCE VALVE (cv=2.5 FOR BALANCE VALVE) FOR CHILLED WATER.
M22	PROVIDE U.L. RATED FIRE STOPPING MATERIAL OR ASSEMBLY AT PIPE PENETRATION IN WALL ON GRIDLINE 'M'.
M23	TIE INTO AND EXTEND DRAIN PAN TO NEW LINE GRIDLINE 'M' WALL. NEW DRAIN PAN SHALL BE 18g STAIN LESS STEEL PROVIDE CONNECTION TO EXISTING DRAIN PAN SO THAT EXISTING AND NEW SECTION FORM ONE NEW WATERPROOF DRAIN PAN. SLOPE TO EXISTING DRAIN PAN. PROVIDE TRACETEK TT1000 X 25 FEET LONG SENSING CABLE WITH CONNECTOR KIT; CONNECT TO EXISTING LEAK DETECTION CABLE IN EXISTING DRAIN PAN.
M24	INSTALL FIRE / SMOKE DAMPER AS REQUIRED PER SMACNA AND NFPA LOCATE B/W STUDS.
M25	DUCTWORK EAST OF GRIDLINE 'M' REQUIRES SEISMIC BRACING.
M26	CUT HOLE IN PLATE COVERING EXISTING LOUVER TO CONNECT OSA DUCT. SEAL PENETRATION.

SHEET NOTES

1. FOR SYMBOLS AND ABBREVIATIONS SEE DRAWING M001

2. MAKE FINAL LOCATIONS FOR NEW INSTALLATIONS WHERE INDICATED. WHERE ARCHITECTURAL FEATURES OR OTHER ITEMS CONFLICT WITH INSTALLATION, NOTIFY COR FOR A DETERMINATION OF FINAL LOCATION.

3. HWS, HWR, CWS, AND CWR TO M1 ROOM HAS BEEN SHUT OFF AT ISOLATION VALVES.

4. HWS, HWR PIPING FOR NEW VAV'S 5-10 HAS BEEN INSTALLED. SUPPORTS AND HANGERS NEED TO BE FIELD VERIFIED, INSERTS AND SHIELDS FOR HANGERS NEED TO BE FIELD VERIFIED. ALL HANGERS AND SUPPORTS NEED TO TIGHTENED AND VERIFIED.

5. BOTTOM OF PIPE DROPS FOR VAV'S NEED TO BE BRACED, SEISMIC RESTRAINT. VAV SUPPORTS MAY BE USED TO CONNECT THE RESTRAINT, OR USE OTHER MEANS.

6. NEW ISOLATION VALVES FOR CWS, CWR, HWS, HWR FOR AHU-206 HAVE BEEN INSTALLED BUT NOT TESTED. NO PIPING FOR AHU-206 HAS BEEN INSTALLED PAST THE ISOLATION VALVES .

7. NO INSULATION FOR PIPING HAS BEEN INSTALLED.

8. SEE APPROVED PIPING MECHANICAL SHOP DRAWING SUBMITTAL.

9. INSULATION THAT WAS REMOVED ON PIPING TO CONNECT TO NEW PIPING SHALL BE REINSTALLED NEW.

10. THE CONTRACTOR SHALL ENSURE THAT THE MANUFACTURER'S RECOMMENDATIONS FOR MECHANICAL EQUIPMENT CLEARANCES ARE MET.

11. ALL NEW DUCT DIMENSIONS SHOWN ARE CLEAR OPENING INSIDE LINING DIMENSIONS. WHERE INDICATED, DUCT LINER SHALL BE INSTALLED PER MECHANICAL SPECIFICATIONS. DUCT LINER IS 1" THICK.

REV	APPROVED DATE	DESCRIPTION	JCN	REDLINE DATE	APVD

LICENSED PROFESSIONAL ENGINEER
JOSIAH TROY SMALLEY
M 38465
MECHANICAL
STATE OF CALIFORNIA
EXPIRES: 09/30/2023

CLH ARCHITECTS ENGINEERS
Case, Lowe & Hart, Inc. 2484 Washington Blvd. Suite 510 Ogden, Utah 84401-2346 801.399.5821 www.clhac.com

E-Corp
BUILDING A WORLD OF DIFFERENCE

DEPARTMENT OF TRANSPORTATION
FEDERAL AVIATION ADMINISTRATION
ATO - TECHNICAL OPERATIONS WESTERN SERVICE AREA

ARTCC
RECONFIGURE M1 ROOM

ATTIC MECHANICAL PLAN

PALMDALE LOS ANGELES CTR CA

REVIEWED BY	SUBMITTED BY		APPROVED BY	
	ART GAPASIN		DARYL KITCHEN	
	PROJECT ENGINEER		MGR. ENGINEERING - LA	
	DESIGNED MTS	ISSUED BY	DATE 02.04.2021	JCN 1004394
	DRAWN GM, JAC	ENGINEERING SERVICES ENROUTE/FSS	DRAWING NO ZLA-D-ARTCC- M103	REV
	CHECKED MTS			

15530

2/4/2022 11:34:05 AM

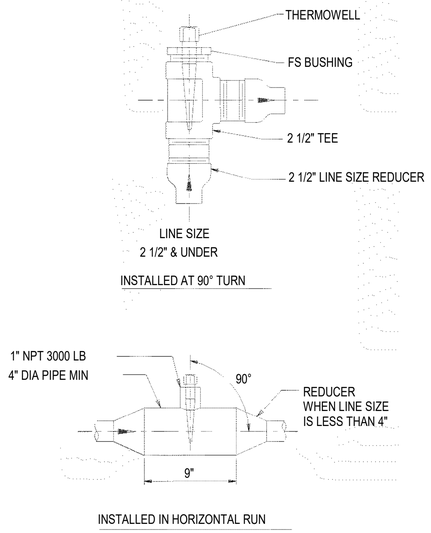

F8 THERMOWELL INSTALLATION DETAIL
NTS

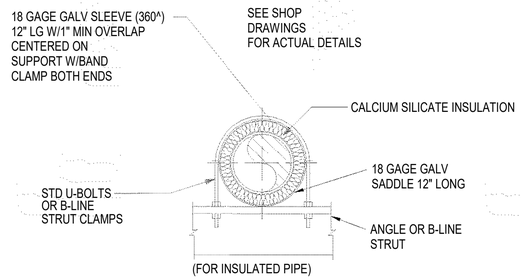

F6 'U' BOLT ASSEMBLY DETAIL
NTS

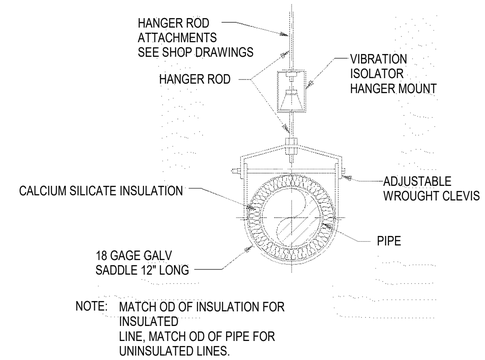

F4 PIPE HANGER DETAIL-SINGLE PIPE TYPE
NTS

SHEET NOTES

1. SEE APPROVED MECHANICAL HVAC SUBMITTALS.
2. COORDINATE WITH COR WORK THAT ALREADY HAS BEEN COMPLETED.
3. PIPING FOR VAV'S HAS BEEN INSTALLED. HANGERS, SUPPORTS AND BRACING FOR VAV'S NEED TO BE COMPLETED AND CHECKED. FINAL INSPECTION, QAQC AND TESTING STILL NEEDS TO BE COMPLETED.

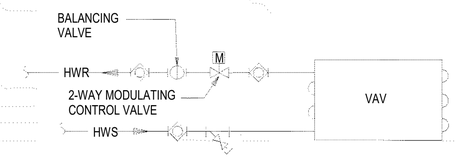

F2 PIPING CONNECTION TO VAV'S REHEAT COIL
NTS

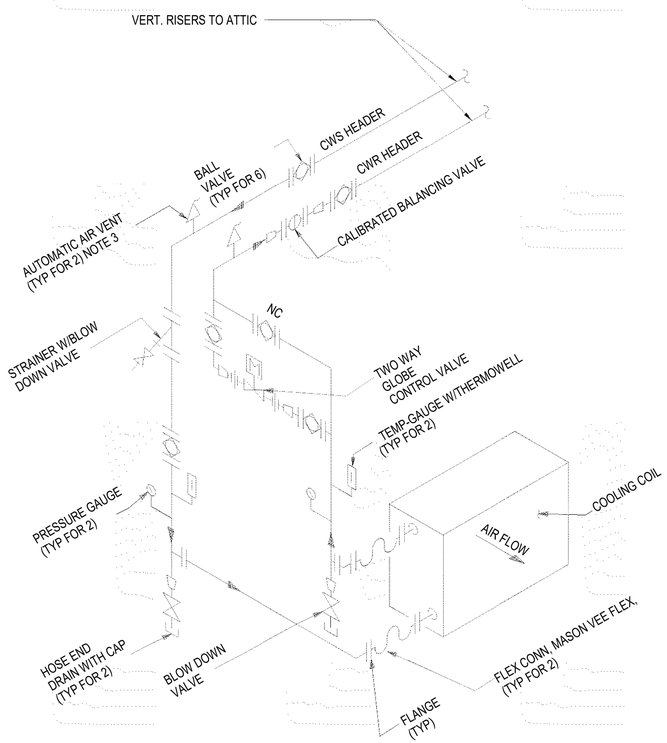

B8 COOLING COIL TYPICAL PIPING DETAIL
NTS

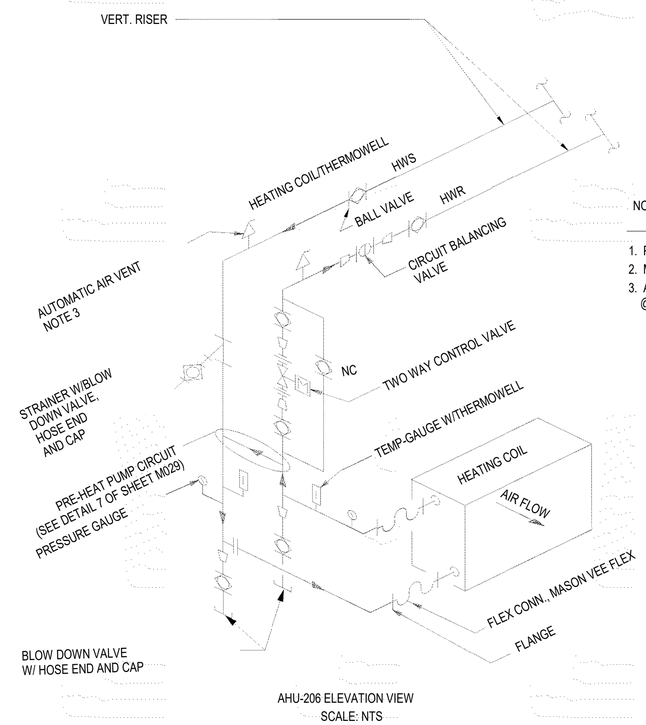

AHU-206 ELEVATION VIEW
SCALE: NTS

B5 PREHEAT COIL TYPICAL PIPING DETAIL
NTS

NOTES FOR DETAILS B8 AND B5

1. PIPE FITTINGS 2" AND SMALLER SHALL BE THREADED FITTINGS.
2. MAINTAIN PIPING ARRANGEMENT FOR COIL ACCESSIBILITY AND REMOVAL.
3. AUTOMATIC AIR VENTS WERE MOVED TO HEADER (MAIN PIPES) IN ATTIC @ WEST END (HIGH POINT)

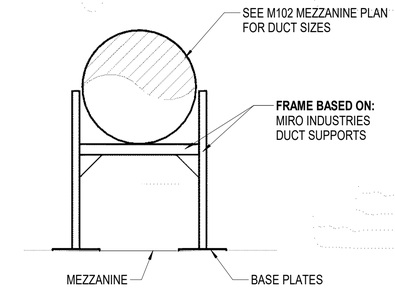

C2 TYPICAL DUCT SUPPORT
6" = 1'-0"

LICENSED PROFESSIONAL ENGINEER
JOSIAH TROY SMALLEY
M 38465
MECHANICAL
STATE OF CALIFORNIA
EXPIRES: 09/30/2023

CLH ARCHITECTS ENGINEERS
Case, Lowe & Hart, Inc. 2484 Washington Blvd. Suite 510 Ogden, Utah 84401-2346 801.399.5821 www.clhae.com

E-Corp
BUILDING A WORLD OF DIFFERENCE

REV	APPROVED DATE	DESCRIPTION	JCN	REDLINE DATE	APVD

DEPARTMENT OF TRANSPORTATION
FEDERAL AVIATION ADMINISTRATION
ATO - TECHNICAL OPERATIONS — WESTERN SERVICE AREA

ARTCC RECONFIGURE M1 ROOM

MECHANICAL DETAILS

PALMDALE — LOS ANGELES CTR — CA

REVIEWED BY	SUBMITTED BY	APPROVED BY
	ART GAPASIN	DARYL KITCHEN
	PROJECT ENGINEER	MGR. ENGINEERING - LA

DESIGNED MTS	ISSUED BY	DATE 02.04.2021	JCN 1004394
DRAWN GM, JAC	ENGINEERING SERVICES ENROUTE/FSS	DRAWING NO ZLA-D-ARTCC- M501	REV
CHECKED MTS			

2/4/2022 11:34:06 AM
16500

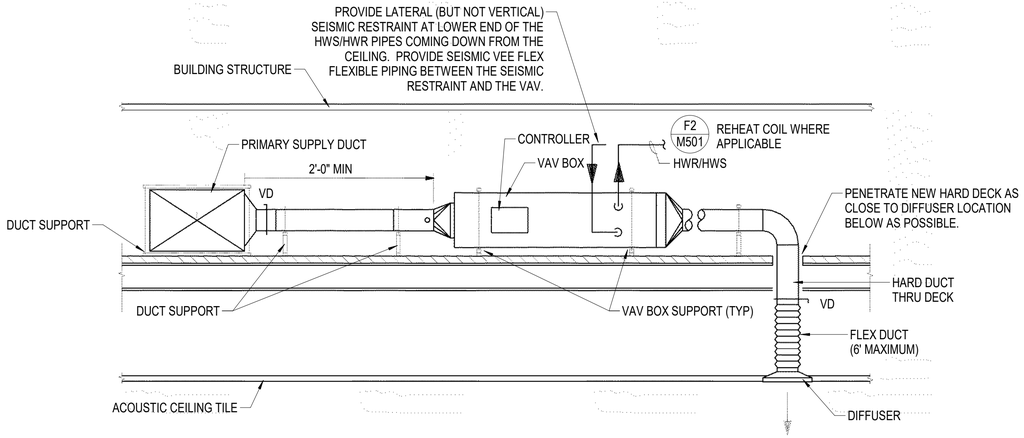

F8 VAV BOX DETAIL
NTS

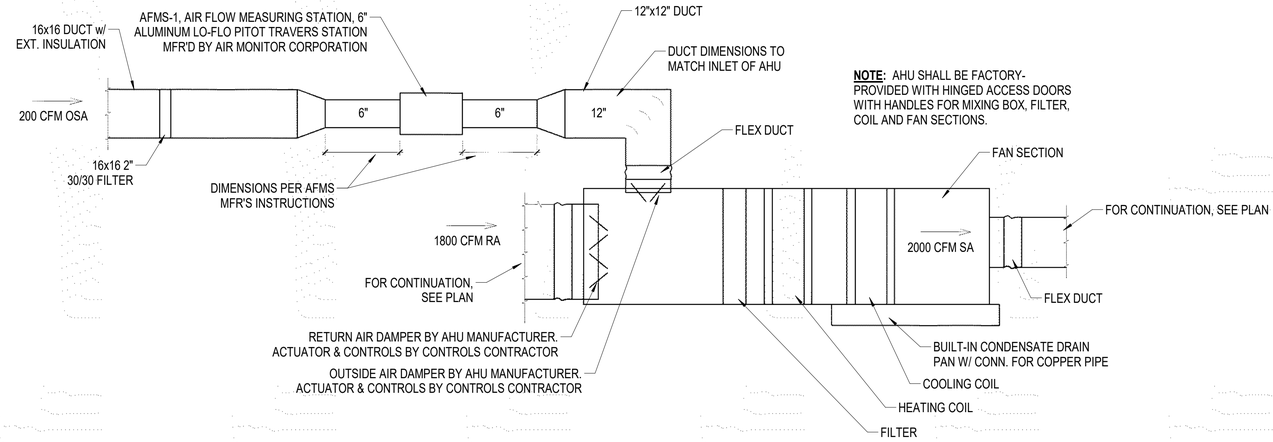

F5 AHU-206 DETAIL
NTS

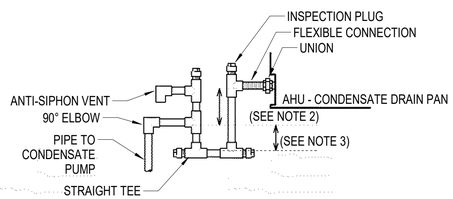

DETAIL NOTES:

1) MATERIAL **SHALL BE TYPE 'L' COOPER**, SIZED TO COIL MFR'S RECOMMENDATIONS.

2) **FOR BLOW THROUGH UNITS:** THIS DIMENSION IS ONE HALF THE POSITIVE PRESSURE (INCHES OF WATER GAGE) DOWNSTREAM OF THE COOLING COIL RELATIVE TO ATMOSPHERE PLUS 1", OR 2", WHICHEVER IS GREATER.
FOR DRAW THROUGH UNITS: THIS DIMENSION IS THE SUCTION PRESSURE (INCHES OF WATER GAGE) DOWNSTREAM OF THE COOLING COIL RELATIVE TO ATMOSPHERE PLUS 1", OR 3", WHICHEVER IS GREATER.

3) **FOR BLOW THROUGH UNITS:** THIS DIMENSION IS THE POSITIVE PRESSURE (INCHES OF WATER GAGE) DOWNSTREAM OF THE COOLING COIL RELATIVE TO ATMOSPHERE PLUS 1", OR 4", WHICHEVER IS GREATER.
FOR DRAW THROUGH UNITS: THIS DIMENSION IS ONE HALF THE SUCTION PRESSURE (INCHES OF WATER GAGE) DOWNSTREAM OF THE COOLING COIL RELATIVE TO ATMOSPHERE PLUS 1", OR 2", WHICHEVER IS GREATER.

B8 AHU CONDENSATE DRAIN DETAIL
NO SCALE

REV	APPROVED DATE	DESCRIPTION	JCN	REDLINE DATE	APVD

DEPARTMENT OF TRANSPORTATION
FEDERAL AVIATION ADMINISTRATION
ATO - TECHNICAL OPERATIONS — WESTERN SERVICE AREA

ARTCC RECONFIGURE M1 ROOM

MECHANICAL DETAILS

PALMDALE — LOS ANGELES CTR — CA

LICENSED PROFESSIONAL ENGINEER — MOSIAH TROY SMALLEY — M 38465 — MECHANICAL — STATE OF CALIFORNIA
EXPIRES: 09/30/2023

CLH ARCHITECTS ENGINEERS
Case, Lowe & Hart, Inc. 2484 Washington Blvd. Suite 510 Ogden, Utah 84401-2346 801.399.5821 www.clhae.com

E-Corp
BUILDING A WORLD OF DIFFERENCE

REVIEWED BY	SUBMITTED BY	APPROVED BY
	ART GAPASIN	DARYL KITCHEN
	PROJECT ENGINEER	MGR. ENGINEERING - LA
DESIGNED Designer	ISSUED BY: ENGINEERING SERVICES ENROUTE/FSS	DATE 02.04.2021 — JCN 1004394
DRAWN Author		DRAWING NO ZLA-D-ARTCC- M502 — REV
CHECKED Checker		

2/4/2022 11:34:07 AM
16530

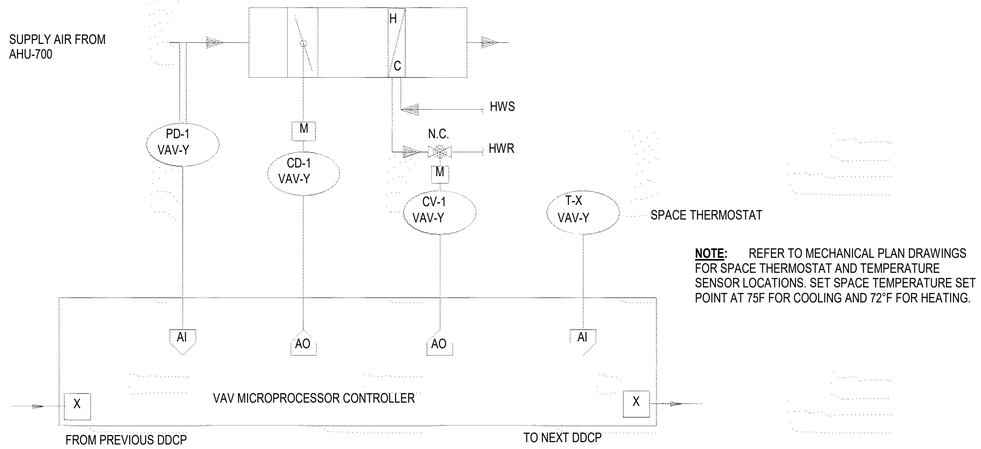

NOTE: REFER TO MECHANICAL PLAN DRAWINGS FOR SPACE THERMOSTAT AND TEMPERATURE SENSOR LOCATIONS. SET SPACE TEMPERATURE SET POINT AT 75F FOR COOLING AND 72°F FOR HEATING.

F8 SINGLE DUCT VAV BOX WITH HOT WATER RE-HEAT - CONTROL DIAGRAM

NTS

GENERAL NOTES

A. FOR SYMBOLS AND ABBREVIATIONS SEE DRAWING M001.

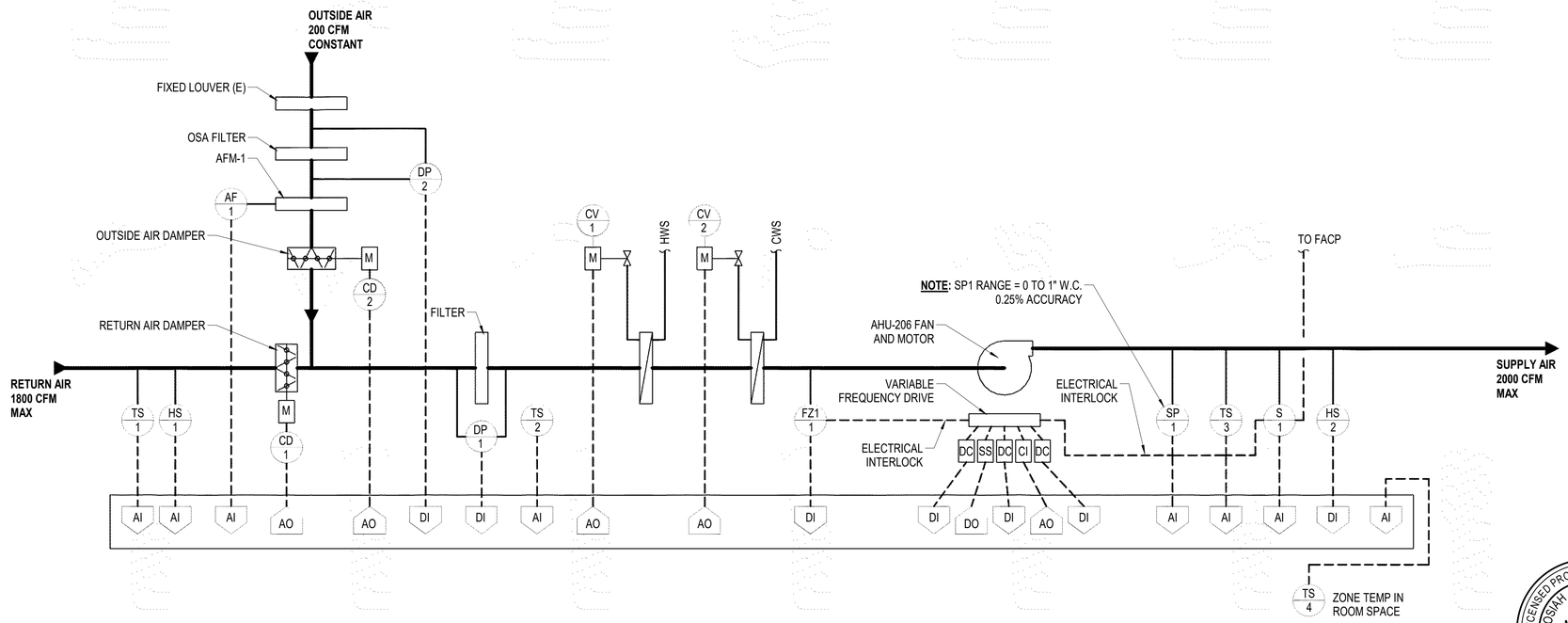

B8 AHU-206 CONTROL DIAGRAM

12" = 1'-0"

LICENSED PROFESSIONAL ENGINEER
JOSIAH TROY SMALLEY
M 38465
MECHANICAL
STATE OF CALIFORNIA
EXPIRES: 09/30/2023

CLH ARCHITECTS ENGINEERS
Case, Lowe & Hart, Inc. 2484 Washington Blvd. Suite 510 Ogden, Utah 84401-2346 801.399.5821 www.clhae.com

E-Corp
BUILDING A WORLD OF DIFFERENCE

REV	APPROVED DATE	DESCRIPTION	JCN	REDLINE DATE	APVD

DEPARTMENT OF TRANSPORTATION
FEDERAL AVIATION ADMINISTRATION
ATO - TECHNICAL OPERATIONS — WESTERN SERVICE AREA

ARTCC
RECONFIGURE M1 ROOM

CONTROLS

PALMDALE — LOS ANGELES CTR — CA

REVIEWED BY	SUBMITTED BY	APPROVED BY
	ART GAPASIN	DAREL KITCHEN
	PROJECT ENGINEER	MGR. ENGINEERING - LA

DESIGNED — Designer
DRAWN — Author
CHECKED — Checker
ISSUED BY: ENGINEERING SERVICES ENROUTE/FSS
DATE 02.04.2021 — JCN 1004394
DRAWING NO ZLA-D-ARTCC- M601 — REV

2/4/2022 11:34:09 AM 18530

DDCP POINT FUNCTION SCHEDULE

POINT DESCRIPTION	DEVICE CODE	HARDWARE: SUPERVISED WIRING	ANALOG INPUT	DIGITAL INPUT	ADDRESSABLE INPUT	ACCUMULATOR INPUT	ANALOG OUTPUT	2 STATE DIGITAL OUTPUT	3 STATE DIGITAL OUTPUT	ADDRESSABLE OUTPUT	FAIL MODE: FAIL ON (OPEN)	FAIL OFF (CLOSED)	LAST COMMAND STATE	LOCAL DEFAULT	SOFTWARE: NETWORKED POINT	CALCULATED POINT	MAINTENANCE ALARM	CRITICAL ALARM	PROGRAM START (STOP)	OPTIMUM START (STOP)	MORNING WARM/COOL	UNOCCUPIED SETPOINT	DEMAND LIMIT	DUTY CYCLE	ENTHALPY ECONOMIZER	DIRECT DIGITAL CONTROL	SET POINT ADJUSTMETN	TOTALIZER	RUN TIME	LIGHTING CONTROL	TENANT BILLING	ALARM INSTRUCTIONS	MAINTENANCE WORK ORDER	ALARM LIMITS	INTERLOCKS (SEE SEQUENCE)	GRAPHICS: 2-D GRAPHICS	3-D GRAPHICS	FLOOR PLAN	POINT LIST	LIMITS: LOW ALARM LIMIT	HIGH ALARM LIMIT	NOTES
VAV BOX (TYPICAL)																																				•		•	•			TYPICAL FOR 7, NOTE 2
SPACE TEMPERATURE SENSOR	T		•														•															•		•						65°F	85°F	TYPICAL FOR 7, NOTE 2
DAMPER CONTROL	CD						•						•									•				•																TYPICAL FOR 7, NOTE 2
REHEAT COIL VALVE CONTROL	CV						•					•										•				•																TYPICAL FOR 6, NOTE 2
VAV AIRFLOW CFM	PD		•														•															•		•						SEE	SCH	TYPICAL FOR 7, NOTE 2
AHU-206																																				•		•	•			
RETURN AIR TEMPERATURE	TS-1		•																																							
RETURN AIR HUMIDITY	HS-1		•																																							
OUTDOOR AIR VOLUME	AF-1		•															•														•		•								NOTE 6
RETURN AIR DAMPER CONTROL	CD-1						•				•															•																
OUTDOOR AIR DAMPER CONTROL	CD-2						•					•														•																
FILTER DIFFERENTIAL PRESSURE	DP-1			•													•																•									
OSA FILTER DIFFERENTIAL PRESSURE	DP-2			•													•																•									
MIXED AIR TEMPERATURE	TS-2		•															•														•		•								
HOT WATER CONTROL VALVE	CV-1						•				•															•																
CHILLED WATER CONTROL VALVE	CV-2						•				•															•																
FREEZESTAT (MANUAL RESET)	FZ-1			•																															•							
SUPPLY FAN CONTROL (START/STOP)	SS							•					•						•																	•						
VFD FAULT	DC			•														•																•								
SUPPLY FAN STATUS	DC			•														•											•			•										NOTE 4
SUPPLY FAN BYPASS	DC			•																																						
SUPPLY FAN SPEED CONTROL	CI						•							•												•																NOTE 5
SUPPLY SMOKE DETECTOR	S-1			•														•																	•							
SUPPLY STATIC PRESSURE	SP-1		•														•															•		•								
DISCHARGE AIR TEMPERATURE	TS-3		•															•														•		•								
DISCHARGE AIR HUMIDITY	HS-2		•																																							
ZONE TEMPERATURE	TS-4		•															•														•										

SHEET NOTES

1. LISTED ALARM LIMITS ARE INITIAL SETTINGS ONLY. ACTUAL ALARM LIMITS MAY DIFFER DEPENDING ON ACTUAL OPERATING CONDITIONS.
2. SEE MECHANICAL FLOOR PLANS FOR LOCATIONS AND QUANTITIES OF NEW AND EXISTING VAV BOXES. VAV-1, VAV- 2, VAV-3, VAV-4 ARE 2 ALREADY PROGRAMMED WITH DDCP POINTS .
3. SET THE ALARM LIMITS AT +/- 10% OF THE SET POINT FOR THE VAV BOX BASED ON THE MECHANICAL SCHEDULE.
4. PROVIDE A NEW CURRENT RELAY FOR STATUS OF AIR HANDLING UNIT.
5. EC FAN MOTOR SHALL BE PROGRAMMED FOR REVERSE SIGNAL, PROGRAM FAN RUN AT 100%. IF EC FAN MOTOR CANNOT BE PROGRAMMED FOR REVERSE SIGNAL. PROVIDE REVERSE ACTING CONTROLLER IN UNIT. POWERED BY ANY AHU TRANSFORMER.
6. WHEN AHU-206 IS ON AND OUTSIDE AIR FLOW IS BELOW ALARM LIMITS, GENERATE ALARM WITH INSTRUCTIONS TO CHANGE FILTER.

LICENSED PROFESSIONAL ENGINEER
MOSIAH TROY SMALLEY
M 38465
MECHANICAL
STATE OF CALIFORNIA
EXPIRES: 09/30/2023

CLH ARCHITECTS ENGINEERS
Case, Lowe & Hart, Inc. 2484 Washington Blvd. Suite 510 Ogden, Utah 84401-2346 801.399.5821 www.clhae.com

E-Corp
BUILDING A WORLD OF DIFFERENCE

REV	APPROVED DATE	DESCRIPTION	JCN	REDLINE DATE	APVD

DEPARTMENT OF TRANSPORTATION
FEDERAL AVIATION ADMINISTRATION
ATO - TECHNICAL OPERATIONS — WESTERN SERVICE AREA

ARTCC
RECONFIGURE M1 ROOM

DDCP POINT FUNCTION SCHEDULE

PALMDALE — LOS ANGELES CTR — CA

REVIEWED BY	SUBMITTED BY	APPROVED BY
	ART GAPASIN	DARYL KITCHEN
	PROJECT ENGINEER	MGR. ENGINEERING - LA

DESIGNED Designer	ISSUED BY	DATE 02.04.2021	JCN 1004394
DRAWN Author	ENGINEERING SERVICES ENROUTE/FSS	DRAWING NO ZLA-D-ARTCC- M602	REV
CHECKED Checker			

19530
2/4/2022 11:34:09 AM

ELECTRICAL LEGEND

LIGHTING FIXTURES

- FLUORESCENT FIXTURE - CAPITAL LETTER (A,B,etc) INDICATES TYPE AS SHOWN IN LIGHTING FIXTURE SCHEDULE. SUBSCRIPT (a, b, etc) INDICATES SWITCH CIRCUIT (TYP FOR ALL FIXTURES)
- FIXTURE HATCHING INDICATES FIXTURE ON EMERGENCY LIGHTING CIRCUIT (TYP FOR ALL FIXTURES)
- 2'x4' FLUORESCENT FIXTURE
- 2'x2' FLUORESCENT FIXTURE
- FLUORESCENT STRIP OR TRACK LIGHT FIXTURE
- INCANDESCENT, FLUORESCENT OR HID FIXTURE, CEILING MOUNTED
- EMERGENCY BATTERY PACK LIGHT FIXTURE
- CEILING OR PENDANT MOUNTED EXIT LIGHT FIXTURE. SHADED SECTION(S) INDICATE FACE(S) WITH DIRECTIONAL ARROWS AS SHOWN ON PLANS
- WALL MOUNTED EXIT LIGHT FIXTURE, +84" UON. SHADED SECTION(S) INDICATE FACE(S) WITH DIRECTIONAL ARROWS AS SHOWN ON PLANS

RECEPTACLES & POWER CONNECTIONS

- DUPLEX RECEPTACLE, 20A, 125V, +18" UON
  - SUBSCRIPTS: 1 = NUMBER INDICATES CIRCUIT CONNECTION
  - WP = WEATHERPROOF
  - EWC = DEDICATED FOR ELECTRIC WATER COOLER USE
- FLOOR MOUNTED DUPLEX RECEPTACLE
- JUNCTION BOX-WALL MOUNTED
- JUNCTION BOX-CEILING MOUNTED
- JUNCTION BOX-SURFACE FLOOR MOUNTED
- MOTOR CONNECTION
- DISCONNECT SWITCH NON-FUSED, +60" UON (30) SUBSCRIPT INDICATES RATED AMPACITY OF SWITCH
- MAGNETIC STARTER, +60" UON (1) SUBSCRIPT INDICATES NEMA STARTER SIZE
- COMBINATION MAGNETIC STARTER WITH MOTOR CIRCUIT PROTECTOR, +60" UON - SUBSCRIPT INDICATES NEMA STARTER SIZE
- VFD — VARIABLE FREQUENCY DRIVE WITH INTEGRAL STARTER/DISCONNECT SWITCH, FURNISHED BY DIVISION 15 AND INSTALLED BY DIVISION 16

SWITCHES & CONTROLS

- $a,b,c, etc. — SINGLE POLE SWITCH - SUBSCRIPT (a,b,etc) INDICATES SWITCHLEG, +48" UON
- $3 — 3-WAY SWITCH, +48" UON
- $D — FLUORESCENT DIMMER SWITCH, +48" UON
- MS — OCCUPANCY SENSOR
- $M — MOTION SENSOR SWITCH
- $ — MANUAL MOTOR STARTER
- T — TRANSFORMER, SIZE AND RATING AS SHOWN ON DRAWINGS
- +18" — MOUNTING HEIGHTS SHOWN WITH SYMBOL TO CENTER OF DEVICE, UON
- PUBLIC ADDRESS/INTERCOM SPEAKER - WALL MOUNT
- SP — PUBLIC ADDRESS/INTERCOM SPEAKER - CEILING FLUSH MOUNT

CONDUITS & CONDUCTORS

- BRANCH CIRCUIT, SURFACE MOUNTED 3/4"C WITH 2#12 PLUS 1#12 GROUND UON
- SAME AS BRANCH CIRCUIT - BUT CONCEALED
- CROSS MARKS DENOTE NUMBER OF WIRES WHEN MORE THAN 3 IN CONDUIT. WIRES SHALL BE #12 UON
- HOME RUN TO PANEL DP, CIRCUIT 1 (DP.1)
- CONDUIT, CAPPED
- CONDUIT, FLEXIBLE
- CONDUIT DOWN
- CONDUIT UP
- L — LIGHTNING / GROUNDING CONDUCTOR

DISTRIBUTION EQUIPMENT

- SURFACE OR FLUSH MOUNTED PANELBOARD
- LAN — FLUSH MOUNTED TELCO OR LAN CABINET

COMMUNICATIONS

- TELEPHONE OUTLET
- DATA OUTLET
- COMBINED TELEPHONE/DATA OUTLET
- FLOOR MOUNTED TELEPHONE/DATA OUTLET

GROUNDING & LIGHTNING PROTECTION

- GROUND PLATE ON STAND OFF INSULATOR
- GROUND TEE WITH EXOTHERMIC WELD
- CONSOLE EQUIPMENT GROUNDING

MISCELLANEOUS

- CROSS HATCHING OVERLAPPING ELECTRICAL DEVICES AND EQUIPMENT INDICATES DEMOLITION WORK UON
- LIGHT LINE WEIGHT INDICATES EXISTING WORK
- HEAVY LINE WEIGHT INDICATES NEW WORK
- AREA DEFINED BY BANK OF OVERHEAD CONDUITS
- KEYED NOTE CALLOUT - NUMBER AS INDICATED

SINGLE LINE, SCHEMATIC DIAGRAM SYMBOLS

- 100AF 60AT — MOLDED CASE THERMAL MAGNETIC CIRCUIT BREAKER, 100A FRAME AND 60A TRIP
- TRANSFER SWITCH, TYPE, SIZE AND RATING AS INDICATED ON DRAWINGS
- TRANSFORMER, SIZE AND RATING AS INDICATED ON DRAWINGS
- Y — WYE CONNECTION
- Δ — DELTA CONNECTION
- GROUND CONNECTION
- LIMIT OF EQUIPMENT
- PNL B1B — PANELBOARD

ALL POWER PANELS AND CIRCUITS ARE DESIGNATED AS FOLLOWS:

C 1051 A 1

- 1 — CIRCUIT NUMBER
- A — PANEL DESIGNATOR
- 1051 — ROOM NUMBER
- C — BUS DESIGNATION:
  - "C"=CRITICAL
  - "B"=BUILDING SERVICE
  - "E"=ESSENTIAL

ELECTRICAL ABBREVIATIONS

A	
A	AMPERE
AA	AIR COOLED
AC	ALTERNATING CURRENT
ACT	ACCESS CONTROL TERMINAL
AF	AMPERE FRAME
AFCT	ABOVE FINISHED COUNTER TOP
AFF	ABOVE FINISHED FLOOR
AIC	AMPERE INTERRUPTING CAPACITY
AMM	AMMETER
ANN	ANNUNCIATOR
AP	ANNUNCIATOR POINT
AT	AMPERE TRIP
ATS	AUTOMATIC TRANSFER SWITCH
AWG	AMERICAN WIRE GAGE
B	
BC	BARE COPPER
BAT CHGR	BATTERY CHARGER
BKR	BREAKER
BPU	BREAKER PROGRAMMING UNIT
C	
C	CONDUIT
CB	CIRCUIT BREAKER
CCTV	CLOSED CIRCUIT TELEVISION
CKT	CIRCUIT
CLF	CURRENT LIMITING FUSE
CO	CONDUIT ONLY
COMM	COMMUNICATIONS
COTR	CONTRACTING OFFICER'S TECHNICAL REPRESENTATIVE
CPC	CRITICAL POWER CENTER
CPU	CENTRAL PROCESSING UNIT
CR	CONTROL RELAY
CS	CONTROL SWITCH
CT	CURRENT TRANSFORMER / CABLE TRAY
D	
DB	DIRECT BURIAL
DC	DIRECT CURRENT
DI	DIGITAL INPUT
DIA	DIAMETER
DISC	DISCONNECT
DM	DEMAND METER
DO	DIGITAL OUTPUT
DPDT	DOUBLE POLE DOUBLE THROW
DPST	DOUBLE POLE SINGLE THROW
E	
ECP	ENGINE CONTROL PANEL
EDAM	ELECTRICAL DATA ACQUISITION AND MONITORING
EH	ELECTRIC HEATER / ELECTRONIC HUMIDIFIER
EHC	ELECTRIC HEATING COIL
EMERG	EMERGENCY
EMT	ELECTRICAL METALLIC TUBING
ERMS	ENVIRONMENTAL REMOTE MONITORING SYSTEM
ET	ELECTRIC HEAT TRACE
F	
FA	FAN COOLED
FDR	FEEDER
FLA	FULL LOAD AMPERES
FLUOR	FLUORESCENT
FO	FIBER OPTIC
FOT	FIBER OPTIC TERMINAL
FV	FULL VOLTAGE
G	
GA	GAGE
GALV	GALVANIZED
GE	GENERAL ELECTRIC
GFE	GOVERNMENT FURNISHED EQUIPMENT
GND	GROUND
H	
HOA	HAND-OFF-AUTOMATIC
HPS	HIGH PRESSURE SODIUM
HZ	HERTZ
I	
IC	INTERCOMMUNICATION / INTERCOM
INCAND	INCANDESCENT
ISMS	INTEGRATED SECURITY MANAGEMENT SYSTEM
J	
JB	JUNCTION BOX
K	
KA	KILOAMPERES
KCMIL	THOUSAND CIRCULAR MILLS
KV	KILOVOLT
KVA	KILOVOLT AMPERES
KVAR	KILOVOLT AMPERES-REACTIVE
KW	KILOWATT
KWH	KILOWATT HOUR
L	
LA	LIGHTNING ARRESTER
LOSP	LOCAL OPERATING STATUS PANEL
LRA	LOCKED ROTOR AMPERE
LTG	LIGHTING
LV	LOW VOLTAGE
M	
MCC	MOTOR CONTROL CENTER
MCP	MOTOR CIRCUIT PROTECTOR
MDT	MAIN DISTRIBUTION TERMINAL
MG	MOTOR GENERATOR
MH	MANHOLE
MLO	MAIN LUGS ONLY
MTS	MANUAL TRANSFER SWITCH
MVA	MEGAVOLT AMPERE
N	
N	NEUTRAL
NEMA	NATIONAL ELECTRICAL MANUFACTURER'S ASSOCIATION
O	
OVHD	OVERHEAD
P	
P	POLE
PABX	PRIVATE AUTOMATIC BRANCH EXCHANGE
PCMS	POWER CONTROL AND MONITORING SYSTEM
PCS	POWER CONDITIONING SYSTEM
PF	POWER FACTOR
PH	PHASE
PNL	PANEL
POS	POSITIVE / POSITION
PP	POWER POLE / PATCH PANEL
R	
RECP	RECEPTACLE
RECT	RECTIFIER
RFI	RADIO FREQUENCY INTERFERENCE
RGS	RIGID GALVANIZED STEEL
RML	RADAR MICROWAVE LINK
RMS	ROOT MEAN SQUARE
S	
SATS	SOLID STATE STATIC AUTOMATIC TRANSFER SWITCH
SCC	SECURITY CONTROL CENTER
SIM	SIMILAR
SP	
SRG	SIGNAL REFERENCE GRID
S/S	START-STOP
STGP	SIGNAL TRANSPORT GROUND PLANE
STP	SHIELDED TWISTED PAIR
SW	SWITCH
SWBD	SWITCHBOARD
SWGR	SWITCHGEAR
T	
T	TRANSDUCER
TB	TERMINAL BOX OR TERMINAL BOARD
TC	TRIP COIL
TD	TIME DELAY
TERM	TERMINAL
TV	TELEVISION
TYP	TYPICAL
U	
UON	UNLESS OTHERWISE NOTED
V	
V	VOLT / VOLTAGE
VA	VOLT AMPERE
VFD	VARIABLE FREQUENCY DRIVE
VM	VOLTMETER
W	
W	WATT / WIRE
WM	WATTMETER
X	
X	AUXILIARY RELAY
XFR	TRANSFER
XFMR	TRANSFORMER
XMTR	TRANSMITTER
XDCR	TRANSDUCER
Y	
Y	WYE
Y-D	WYE-DELTA
Z	
Z	IMPEDANCE
MISCELLANEOUS	
Ø	PHASE

ELECTRICAL GENERAL NOTES

1. PRACTICE EXTREME CAUTION WHEN WORKING ON ANY OF THE ELECTRICAL POWER SYSTEMS. THIS FACILITY IS A FULLY OPERATIONAL AIR ROUTE TRAFFIC CONTROL CENTER (ARTCC) AND UNAUTHORIZED ELECTRICAL OUTAGES MAY CAUSE ACCIDENTS AND/OR LOSS OF LIFE.
2. UNSCHEDULED ELECTRICAL SERVICE INTERRUPTIONS ARE NOT PERMITTED. WORK REQUIRING PERMANENT, TEMPORARY OR PARTIAL OUTAGES SHALL BE SCHEDULED AND APPROVED IN WRITING BY COTR AT LEAST 14 CALENDAR DAYS IN ADVANCE OF PERFORMING WORK.
3. ONLY FAA PERSONNEL MAY OPERATE CIRCUIT BREAKERS. CONTRACTOR SHALL REQUEST PERMISSION OF FAA IN ADVANCE AND IN WRITING FOR EACH CASE OF BREAKER OPERATION. CONTRACTOR SHALL NOT OPEN (DE-ENERGIZE) OR CLOSE (ENERGIZE) ANY CIRCUIT BREAKER AT ANY TIME.
4. CONDUIT ROUTING SHOWN IS DIAGRAMMATIC. FIELD VERIFY ACTUAL CONDITIONS PRIOR TO INSTALLATION.
5. COORDINATE ELECTRICAL WORK WITH ARCHITECTURAL AND MECHANICAL DRAWINGS.
6. FIRESTOP CONDUIT PENETRATIONS THROUGH FLOORS AND FIRE RATED WALLS. MATERIALS & METHODS EMPLOYED IN FIRESTOPPING SHALL BE IN ACCORDANCE WITH UL STANDARDS. CONTRACTOR SHALL FIELD VERIFY LOCATIONS OF FIRE RATED WALLS.
7. ROUTE OVERHEAD CONDUIT RUNS AS HIGH AS POSSIBLE.
8. ELECTRICAL EQUIPMENT AND LIGHTING FIXTURE SUPPORT SYSTEMS SHALL BE INSTALLED TO WITHSTAND SEISMIC IBC CATEGORY D.
9. INFORMATION SHOWN IS PER SURVEY PERFORMED ON 8/12/13. COORDINATE WITH COR IF CONFLICTS ARISE.
10. EXISTING STRUCTURAL STEEL, MISCELLANEOUS STEEL, AND GRATING MAY CONTAIN LEAD PAINT. CONTRACTOR WILL NEED TO ABATE PAINT OR DEVELOP PROCEDURES THAT WILL PREVENT ANY LEAD DUST OR FUMES FROM GETTING IN THE AIR PER SPECIFICATION 2085.

REGISTERED PROFESSIONAL ENGINEER
MARC L. GOULD
E18329
ELECTRICAL
02/04/2022
STATE OF CALIFORNIA
EXPIRES: 03/31/2022

CLH ARCHITECTS ENGINEERS
Case, Lowe & Hart, Inc. 2484 Washington Blvd. Suite 510 Ogden, Utah 84401-2346 801.399.5821 www.clhac.com

E-Corp
BUILDING A WORLD OF DIFFERENCE

REV	APPROVED DATE	DESCRIPTION	JCN	REDLINE DATE	APVD

DEPARTMENT OF TRANSPORTATION
FEDERAL AVIATION ADMINISTRATION
ATO - TECHNICAL OPERATIONS — WESTERN SERVICE AREA

ARTCC
RECONFIGURE M1 ROOM
ELECTRICAL LEGEND, SYMBOLS, NOTES AND ABBREVIATIONS

PALMDALE — LOS ANGELES CTR — CA

REVIEWED BY	SUBMITTED BY: ART GAPASIN, PROJECT ENGINEER		APPROVED BY: DARYL KITCHEN, MGR. ENGINEERING - LA
	DESIGNED: Designer	ISSUED BY: ENGINEERING SERVICES ENROUTE/FSS	DATE: 02.04.2021 — JCN: 1004394
	DRAWN: J.M.S.		DRAWING NO: ZLA-D-ARTCC- E174 — REV
	CHECKED: K.J.L.		

15530
2/8/2022 8:04:17 AM

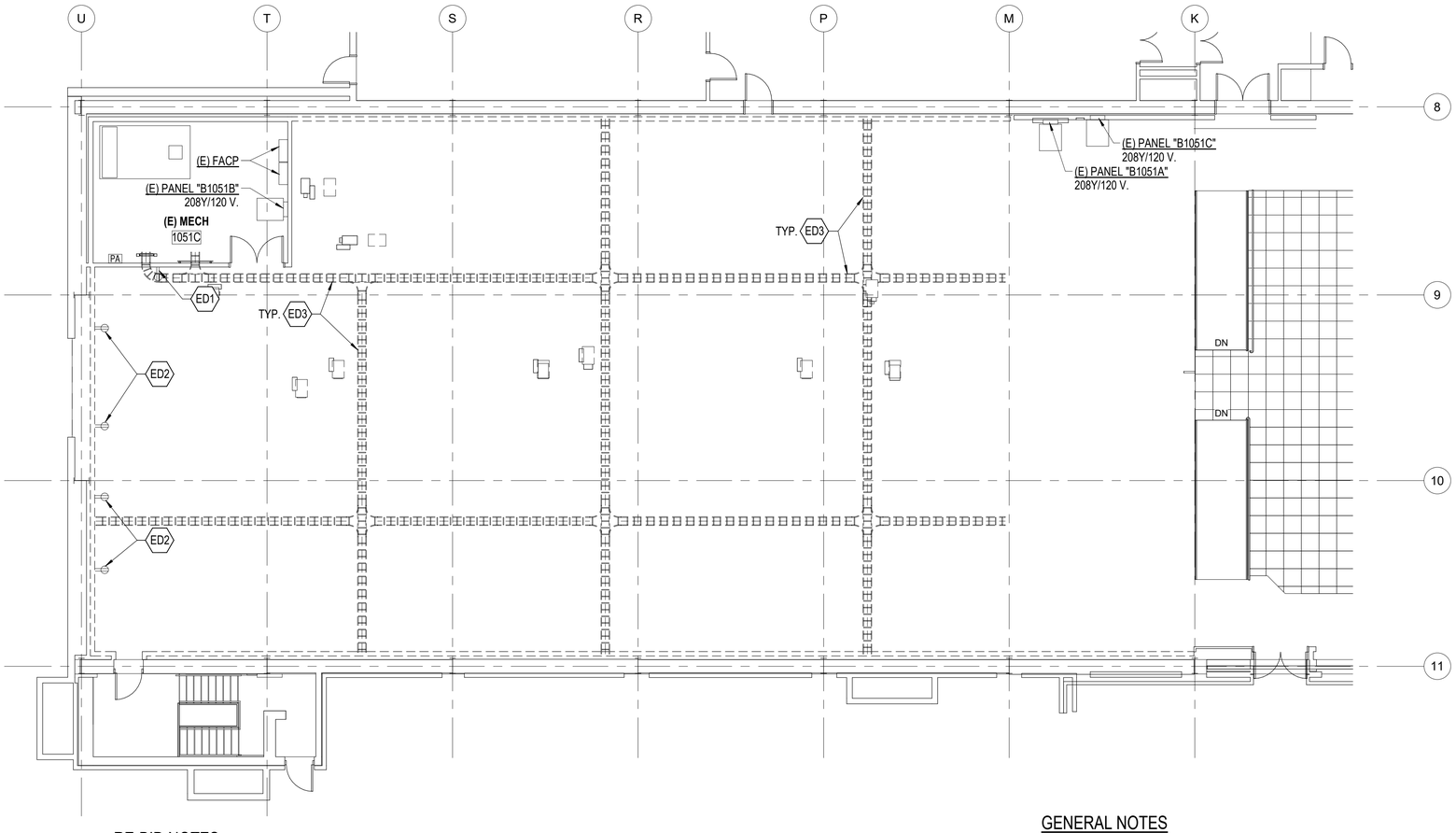

RE-BID NOTES

1. ELECTRICAL DEMOLITION WAS COMPLETED. FIELD VERIFY.

D8 FIRST FLOOR ELECTRICAL DEMOLITION PLAN

1/8" = 1'-0"

ELECTRICAL DEMOLITION KEYED NOTES

MARK	NOTE
ED1	EXISTING DEVICE TO REMAIN.
ED2	REMOVE EXISTING CONDUIT, J-BOXES & DEVICES. RE-INSTALL CONDUIT, J-BOXES & NEW DEVICES IN THE NEW WALL.
ED3	REMOVE & STORE EXISTING CABLE TRAY FOR RE-INSTALLATION. REMOVE ALL HANGARS FROM UPPER STRUCTURE.

GENERAL NOTES

A. EXTREME CAUTION MUST BE PRACTICED WHEN WORKING ON ANY OF THE ELECTRICAL POWER SYSTEMS (CRITICAL, ESSENTIAL, AND BUILDING SERVICE) AS THIS IS A FULLY OPERATIONAL AIR ROUTE TRAFFIC CONTROL CENTER AND ANY UNAUTHORIZED ELECTRICAL OUTAGE MAY CAUSE ACCIDENTS AND/OR LOSS OF LIVES.

B. NO UNSCHEDULED INTERRUPTIONS WILL BE TOLERATED. ALL WORK REQUIRING TEMPORARY OR PARTIAL ELECTRICAL POWER OUTAGES MUST BE SCHEDULED IN WRITING 14 CALENDAR DAYS IN ADVANCE. ONLY FAA PERSONNEL ARE ALLOWED TO OPERATE POWER PANELS.

C. FOR DEVICES SHOWN TO BE REMOVED, REMOVE ASSOCIATED CONDUITS AND WIRES BACK TO THE SOURCE UNLESS OTHERWISE NOTED. MAINTAIN CONTINUITY OF THE BRANCH CIRCUITS SERVING DEVICES THAT ARE NOT PART OF THIS DEMOLITION.

D. PROTECT AND RE-SUPPORT CONDUITS THAT ARE TO REMAIN AS WALLS ARE BEING DEMOLISHED AS PART OF STRUCTURAL WORK.

E. PROVIDE TEMPORARY LIGHTING IN THE M1 ROOM WHEN THE LIGHTS ARE BEING DEMOLISHED. CONTRACTOR MYA USE PANEL E3003A 480Y/277 V. IN THE ATTIC FOR TEMPORARY POWER.

F. FOR EXISTING CONDUITS FOR FEEDERS (TO PANELBOARDS), EQUIPMENT BRANCH CIRCUITS, OR LIGHTING, SINCE NEW METAL STUD WALLS ARE BEING CONSTRUCTED, EXISTING CONDUITS CAN REMAIN IF THEY DON'T INTERFERE WITH THE CONSTRUCTION OF NEW WALLS, IF THEY ARE SUPPORTED, AND IF THEY DON'T INTERFERE WITH THE 2.7" ALLOWABLE MOVEMENT SHOWN ON DRAWING S201; OTHERWISE, THEY SHOULD BE REPLACED.

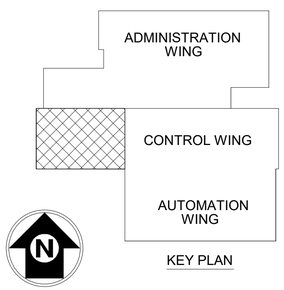

KEY PLAN

REGISTERED PROFESSIONAL ENGINEER
MARC L. GOULD
E18329
ELECTRICAL
02/04/2022
STATE OF CALIFORNIA
EXPIRES: 03/31/2022

CLH ARCHITECTS ENGINEERS
Case, Lowe & Hart, Inc. 2484 Washington Blvd, Suite 510 Ogden, Utah 84401-2346 801.399.5821 www.clhac.com

E-Corp
BUILDING A WORLD OF DIFFERENCE

REV	APPROVED DATE	DESCRIPTION	JCN	REDLINE DATE	APVD

DEPARTMENT OF TRANSPORTATION
FEDERAL AVIATION ADMINISTRATION
ATO - TECHNICAL OPERATIONS WESTERN SERVICE AREA

ARTCC
RECONFIGURE M1 ROOM

FIRST FLOOR ELECTRICAL DEMOLITION PLAN

PALMDALE LOS ANGELES CTR CA

REVIEWED BY	SUBMITTED BY	APPROVED BY
	ART GAPASIN	DARYL KITCHEN
	PROJECT ENGINEER	MGR. ENGINEERING - LA

DESIGNED Designer
DRAWN J.M.S.
CHECKED K.J.L.
ISSUED BY ENGINEERING SERVICES ENROUTE/FSS
DATE 02.04.2021 JCN 1004394
DRAWING NO ZLA-D-ARTCC- E175 REV

16530
2/4/2022 9:26:05 AM

ELECTRICAL POWER KEYED NOTES

MARK	NOTE
EP1	PROVIDE LABEL ON RECEPTACLE WITH NAME OF POWER PANEL AND THE CIRCUIT NUMBER INDICATED.
EP2	NUMBER OF CIRCUITS IS SHOWN ON THE HOMERUN ONLY. EACH BRANCH CIRCUIT SHALL HAVE ITS OWN SEPARATE NEUTRAL AND GROUNDING CONDUCTORS. USE OF A COMMON SHARED NEUTRAL OR GROUNDING CONDUCTORS IS NOT PERMITTED.
EP3	RECEPTACLES TO BE INSTALLED 18" ABOVE THE RAISED FLOOR.
EP4	COORDINATE WITH UNICOR SUPPLIER TO PROVIDE RECEPTACLE FOR EACH CBI UNIT. REMOVE EXISTING POWER POLES ON THE CBI UNITS AND PROVIDE COVER PLATES.
EP5	INSTALL (3) 1" CONDUITS WITH PULL STRING FROM PANEL "B1051C" TO A J-BOX UNDERNEATH THE RAISED FLOOR. POWER TO BE PULLED BY OTHER CONDUIT SHALL GO ABOVE THE CEILING AND DOWN THE NEW M1 WALL. CONTRACTOR SHALL FIELD VERIFY EXACT ROUTING.
EP6	CONNECT PERIMETER GROUND LOOP TO EVERY THIRD PERIMETER ACCESS FLOOR PEDESTAL USING #6 AWG BARE COPPER CONDUCTOR AND EXOTHERMIC WELDS.
EP7	INSTALL #4/0 AWG BARE COPPER CABLE PERIMETER GROUND LOOP ON FLOOR SLAB NOT MORE THAN 12" FROM PERIMETER WALL. FASTEN TO FLOOR WITH CLIPS EVERY 5 FEET.
EP8	CONNECT SRG TO PERIMETER GROUND LOOP EVERY 10'-0" WITH #4/0 AWG BY EXOTHERMIC WELD.
EP9	THE DISTANCE FROM THE EXTERNAL WALLS OF THE CONTROL ROOM TO THE SIGNAL REFERENCE GRID SHALL NOT EXCEED 3 FEET.
EP10	CONNECT NEW PERIMETER GROUND CONDUCTOR TO EXISTING PERIMETER GROUND CONDUCTOR BY EXOTHERMIC WELD.
EP11	CONNECT NEW SRG TO EXISTING SRG BY EXOTHERMIC WELDS.
EP12	CONNECT NEW MULTI-POINT GROUND PLATE TO EXISTING MULTI-POINT WITH 4/0 AWG BARE COPPER CONDUCTOR BY EXOTHERMIC WELDS.
EP13	COORDINATE EXACT LOCATION AND MOUNTING HEIGHT FOR TV MONITOR RECEPTACLE.
EP14	EXISTING RECEPTACLE ALONG PERIMETER WALLS SHALL BE RELOCATED TO NEW STUD WALL. PROVIDE NEW CONDUIT AND CONDUCTORS.
EP15	FINAL LOCATION BY FAA.
EP16	MOUNT IN CEILING. FINAL LOCATION BY FAA.

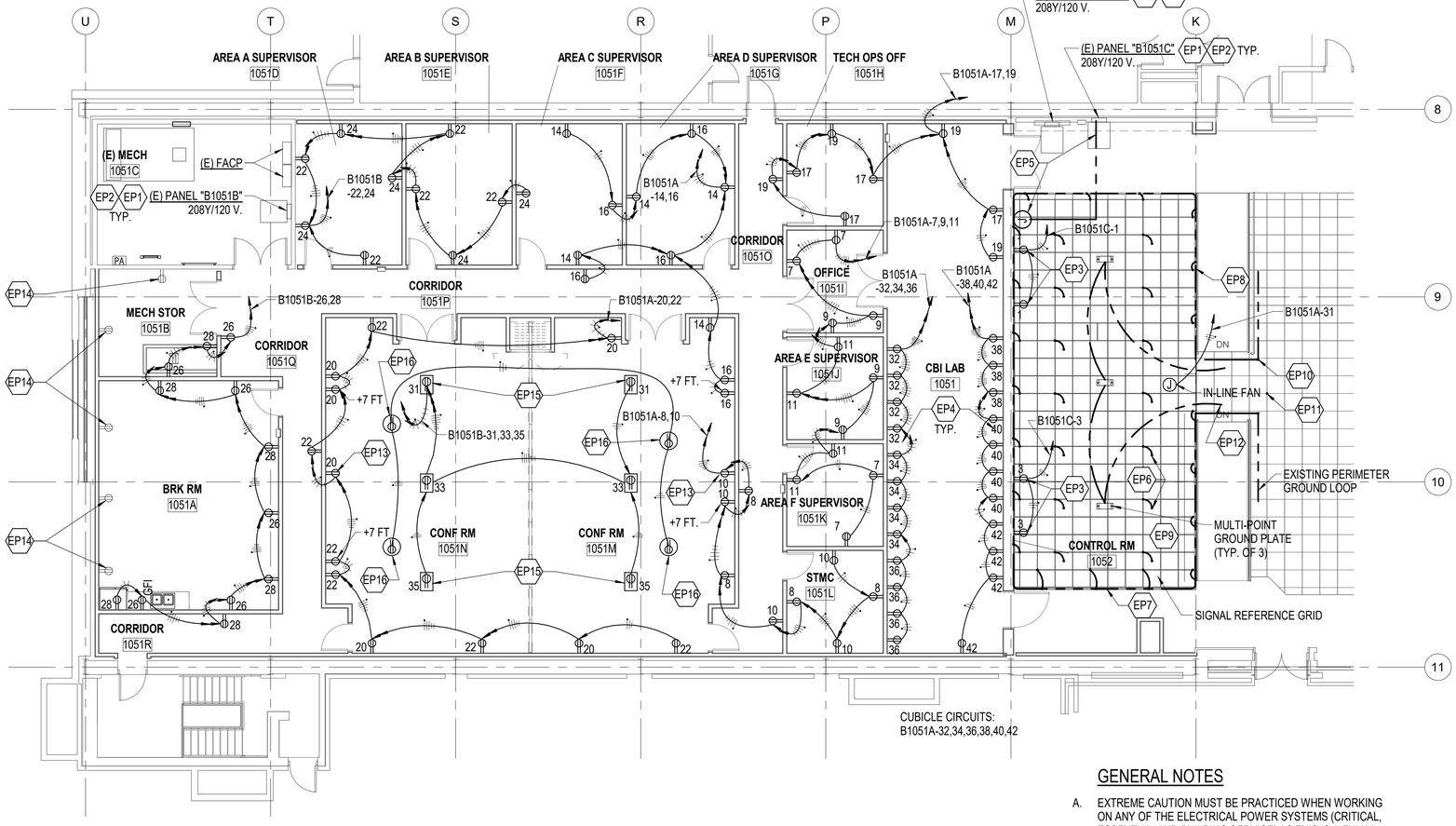

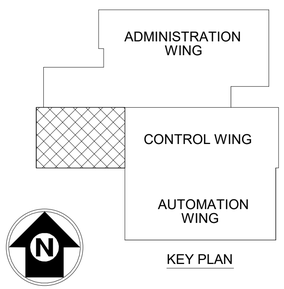

KEY PLAN

RE-BID NOTES

1. REPAIR AND/OR TIE INTO EXISTING POWER CONDUIT THAT WAS CUT DURING DEMO FOR RECEPTACLES ON EXISTING PERIMETER WALLS.

D1 FIRST FLOOR POWER AND GROUNDING PLAN
1/8" = 1'-0"

GENERAL NOTES

A. EXTREME CAUTION MUST BE PRACTICED WHEN WORKING ON ANY OF THE ELECTRICAL POWER SYSTEMS (CRITICAL, ESSENTIAL, AND BUILDING SERVICE) AS THIS IS A FULLY OPERATIONAL AIR ROUTE TRAFFIC CONTROL CENTER AND ANY UNAUTHORIXED ELECTRICALOUTAGE MAY CAUSE ACCIDENTS AND/OR LOSS OF LIVES.

B. NO UNSCHEDULED INTERRUPTIONS WILL BE TOLERATED. ALL WORK REQUIRING TEMPORARY OR PARTIAL ELECTRICAL POWER OUTAGES MUST BE SCHEDULED IN WRITING 14 CALENDAR DAYS IN ADVANCE. ONLY FAA PERSONNEL ARE ALLOWED TO OPERATE POWER PANELS.

C. EACH BRANCH CIRCUIT SHALL HAVE ITS OWN SEPARATE NEUTRAL AND GROUNDING CONDUCTORS. USE OF COMMON/SHARED NEUTRAL OR GROUNDING CONDUCTOR IS NOT PERMITTED.

D. CONTRACTOR SHALL PROVIDE MEANS AND METHODS TO CALDWELD IN THE DSR ROOM THAT WILL NOT CREATE SMOKE OR ODOR TO THE CONTROL ROOM.

E. FOR EXISTING CONDUITS FOR FEEDERS (TO PANELBORDS), EQUIPMENT BRANCH CIRCUITS, OR LIGHTING, SINCE NEW METAL STUD WALLS ARE BEING CONSTRUCTED, EXISTING CONDUITS CAN REMAIN IF THEY DON'T INTERFERE WITH THE CONSTRUCTION OF NEW WALLS, IF THEY ARE SUPPORTED, AND IF THEY DON'T INTERFERE WITH THE 2.7" ALLOWABLE MOVEMENT SHOWN ON DRAWING S201; OTHERWISE THEY SHOULD BE REPLACED.

REGISTERED PROFESSIONAL ENGINEER
MARC L. GOULD
E18329
ELECTRICAL
02/04/2022
STATE OF CALIFORNIA
EXPIRES: 03/31/2022

CLH ARCHITECTS ENGINEERS
Case, Lowe & Hart, Inc. 2484 Washington Blvd. Suite 510 Ogden, Utah 84401-2346 801.399.5821 www.clhae.com

E-Corp
BUILDING A WORLD OF DIFFERENCE

REV	APPROVED DATE	DESCRIPTION	JCN	REDLINE DATE	APVD

DEPARTMENT OF TRANSPORTATION
FEDERAL AVIATION ADMINISTRATION
ATO - TECHNICAL OPERATIONS — WESTERN SERVICE AREA

ARTCC
RECONFIGURE M1 ROOM

FIRST FLOOR POWER AND GROUNDING PLAN

PALMDALE — LOS ANGELES CTR — CA

REVIEWED BY	SUBMITTED BY: ART GAPASIN, PROJECT ENGINEER		APPROVED BY: DARYL KITCHEN, MGR. ENGINEERING - LA
	DESIGNED: Designer	ISSUED BY: ENGINEERING SERVICES ENROUTE/FSS	DATE: 02.04.2021 — JCN: 1004394
	DRAWN: J.M.S.		DRAWING NO: ZLA-D-ARTCC- E176 — REV
	CHECKED: K.J.L.		

16500
2/8/2022 7:24:37 AM

ELECTRICAL ATTIC KEYED NOTES

MARK	NOTE
EE1	PROVIDE 15A/3P BREAKER IN EXISTING PANEL E3003A FOR AHU-206. PULL 3 - #12 & 1 - #12 GRD. IN 3/4" CONDUIT FROM AHU-206 TO EXISTING PANEL E3003A FOR POWER. CONTRACTOR TO COORDINATE WITH COR AND FIELD VERIFY FOR EXACT LOCATION AND CONDUIT ROUTING.
EE2	CONDUITS CROSS SEISMIC JOINT ON LINE "A". PROVIDE SECTION OF LIQUID-TIGHT FLEX CONDUIT TO PROVIDE MIN. 3" MOVEMENT IN ALL DIRECTIONS.
EE3	PROVIDE POWER TO CONTROLS CONTROLLER FOR AHU-206. PROVIDE 2 - #12 & 1 - #12 GRD. IN 3/4" CONDUIT FROM SPARE CIRCUIT BREAKER IN PANEL E3003D TO NEW DDCP CONTROLLER. COORDINATE WITH COR FOR BREAKER, PATH AND ROUTE OF CONDUIT.
EE4	PROVIDE VARIABLE FREQUENCY DRIVE WITH BY-PASS PER ELECTRICAL SPECIFICATION DIVISION 262923.

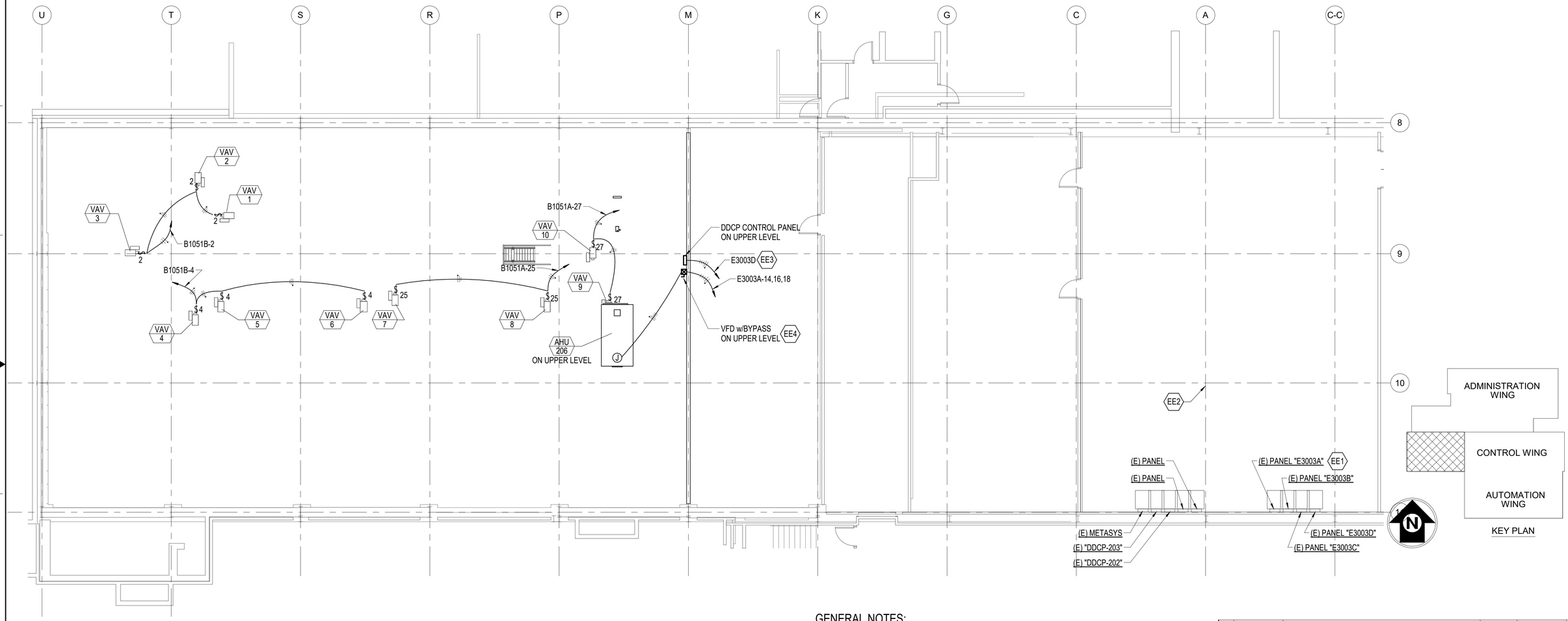

D8 ATTIC POWER PLAN
1/8" = 1'-0"

GENERAL NOTES:

A. EXTREME CAUTION MUST BE PRACTICED WHEN WORKING ON ANY OF THE ELECTRICAL POWER SYSTEMS (CRITICAL, ESSENTIAL AND BUILDING SERVICE) AS THIS IS A FULLY OPERATIONAL AIR ROUTE TRAFFIC CONTROL CENTER AND ANY UNAUTHORIZED ELECTRICAL OUTAGE MAY CAUSE ACCIDENTS AND / OR LOSS OF LIVES.

B. NO UNSCHEDULED INTERRUPTIONS WILL BE TOLERATED. ALL WORK REQUIRING TEMPORARY OR PARTIAL ELECTRICAL POWER OUTAGES MUST BE SCHEDULED IN WRITING 14 CALENDAR DAYS IN ADVANCE. ONLY FAA PERSONNEL ARE ALLOWED TO OPERATE POWER PANELS.

C. EACH BRANCH CIRCUIT SHALL HAVE ITS OWN SEPARATE NEUTRAL AND GROUNDING CONDUCTORS. USE OF COMMON / SHARED NEUTRAL OR GROUNDING CONDUCTOR IS NOT PERMITTED.

D. FOR EXISTING CONDUITS FOR FEEDERSS (TO PANELBOARDS), EQUIPMENT BRANCH CIRCUITS, OR LIGHTING, SINCE NEW METAL STUD WALLS ARE BEING CONSTRUCTED, EXISTING CONDUITS CAN REMAIN IF THEY DON'T INTERFERE WITH THE CONSTRUCTION OF NEW WALLS, IF THEY ARE SUPPORTED, AND IF THEY DON'T INTERFERE WITH THE 2.7" ALLOWABLE MOVEMENT SHOWN ON DRAWING S201; OTHERWISE, THEY SHOULD BE REPLACED.

REGISTERED PROFESSIONAL ENGINEER
MARC L. GOULD
E18329
ELECTRICAL
02/04/2022
STATE OF CALIFORNIA
EXPIRES: 03/31/2022

CLH ARCHITECTS ENGINEERS
Case, Lowe & Hart, Inc. 2484 Washington Blvd.
Suite 510 Ogden, Utah 84401-2346
801.399.5821 www.clhae.com

E-Corp
BUILDING A WORLD OF DIFFERENCE

REV	APPROVED DATE	DESCRIPTION	JCN	REDLINE DATE	APVD

DEPARTMENT OF TRANSPORTATION
FEDERAL AVIATION ADMINISTRATION
ATO - TECHNICAL OPERATIONS WESTERN SERVICE AREA

ARTCC
RECONFIGURE M1 ROOM

ATTIC POWER PLAN

PALMDALE LOS ANGELES CTR CA

REVIEWED BY	SUBMITTED BY: ART GAPASIN, PROJECT ENGINEER		APPROVED BY: DARYL KITCHEN, MGR. ENGINEERING - LA
	DESIGNED: Designer	ISSUED BY: ENGINEERING SERVICES ENROUTE/FSS	DATE: 02.04.2021 / JCN: 1004394
	DRAWN: J.M.S.		DRAWING NO: ZLA-D-ARTCC- E177 / REV
	CHECKED: K.J.L.		

2/4/2022 9:26:08 AM 16530

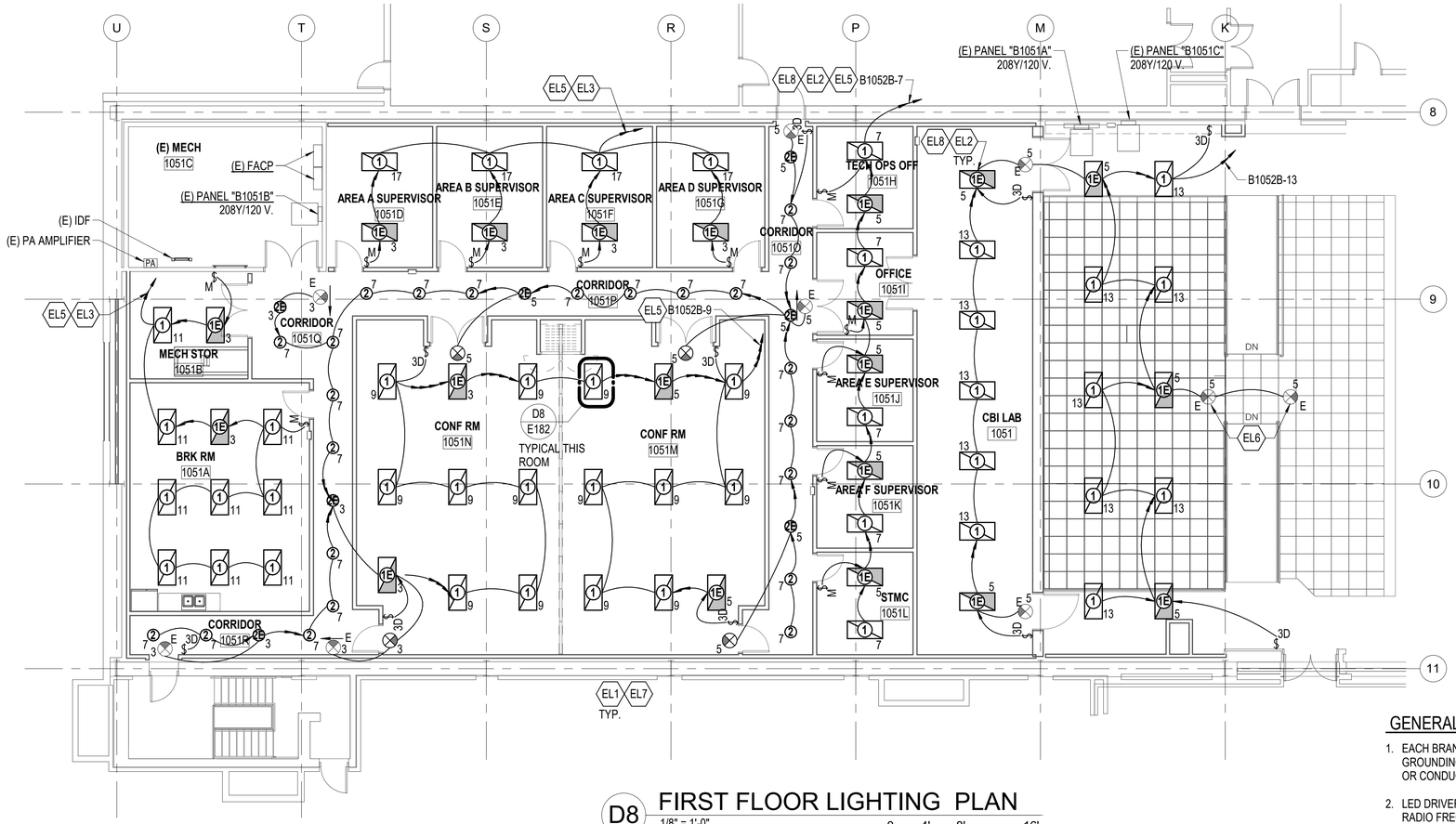

D8 FIRST FLOOR LIGHTING PLAN

1/8" = 1'-0"

0 4' 8' 16'

ELECTRICAL LIGHTING KEYED NOTES

MARK	NOTE
EL1	ALL LIGHTS ARE NEW.
EL2	ALL EMERGENCY FIXTURES SHALL BE CONNECTED TO EXISTING CIRCUIT POWERED BY UPS PANEL B120AA. CONNECT TO CIRCUIT B120AA.3 OR B120AA.5. THE NORMAL POWER SHALL NOT BE CONNECTED TO THESE EMERGENCY LIGHTS. HOWEVER, THE DIMMING CONTROLS (0-10 VOLTS) SHALL BE CONNECTED TO THE 2x4 LIGHTS. ON THE LOSS OF DIMMING CONTROL, 2x4 EMERGENCY LIGHTS SHALL GO TO FULL BRIGHTNESS.
EL3	LIGHTING IN ROOMS 1051A & 1051B SHALL BE CONNECTED TO B1052B-11. LIGHTING IN 1051C (MECH. ROOM), 1051D, & 1051E SHALL BE CONNECTED TO B105B-17. PULL2 - #12 & 1 - #12 GRD. TO BREAKER. RE-USE EXISTING CIRCUIT IN PANEL B1052B IN UTILITY CHASE.
EL4	CONNECT EMERGENCY LIGHTS TO B120AA.3 OR B120AA.5 AND BALANCE THE LOAD.
EL5	USE EXISTING SPARE 20AMP BREAKER IN PANEL B1052B FOR NEW LIGHTING CIRCUIT. PULL 2 - #12 & 1 - #12 GRD. WIRES IN 3/4" C. TO BREAKER.
EL6	EXIT LIGHTS SHALL BE INSTALLED ON EAST AND WEST SIDE OF BRIDGE. COORDINATE EXACT LOCATION WITH SOR. WHERE CONDUIT CANNOT BE HIDDEN IN WALLS OR CEILING, PAINT TO MATCH WALL COLOR.
EL7	ALL SWITCHES SHALL BE DIMMABLE. EVERY CONFERENCE ROOM, OFFICE, CORRIDOR, CBI LAB AND NEW CONTROL ROOM AREA SHALL HAVE ROOM CONTROLLERS AND BRIDGE (COMMUNICATIONS). ALL NEW CONFERENCE ROOMS & OFFICES SHALL HAVE OCCUPANCY SENSORS, DIMMABLE SWITCHES, ROOM CONTROLLERS, OCCUPANCY SENSORS AND BRIDGE (COMMUNICATION) SHALL MATCH EXISTING IN THE FACILITY. SEE SCHEDULE ON THIS SHEET FOR MANUFACTURE AND CATALOG NUMBERS.
EL8	PANEL IS LOCATED IN ELECTRICAL CLOSET IN HALLWAY NEAR GRID 8/C-2.

LIGHTING CONTROL DEVICES

TYPE	MANUFACTURER	CATALOG NUMBER	REMARKS
NEW	LEGRAND WATTSTOPPER	LMDC-100	CEILING MOUNTED DUAL TECH SENSOR
NEW	LEGRAND WATTSTOPPER	LMBC-101	BRIDGE
NEW	LEGRAND WATTSTOPPER	LMDM-101	DIMMING SWITCH
NEW	LEGRAND WATTSTOPPER	LMRC-211	1-RELAY DIMMING ROOM CONTROLLER

GENERAL NOTES:

1. EACH BRANCH CIRCUIT SHALL HAVE ITS OWN SEPARATE NEUTRAL AND GROUNDING CONDUCTORS. USE OF COMMON OR SHARED NEUTRAL OR CONDUCTORS IS NOT PERMITTED.
2. LED DRIVERS TO MEET FCC PART 15 SUBPART B, CLASS B TO PREVENT RADIO FREQUENCY INTERFERENCES.
3. EXISTING CIRCUIT B120AA.3 IS ABOVE THE CEILING ABOVE THE OBSERVATION BRIDGE, AND EXISTING CIRCUIT B120AA.5 IS ABOVE THE CONTROL ROOM ACOUSTICAL CEILING UNDER THE OBSERVATION BRIDGE FLOOR.

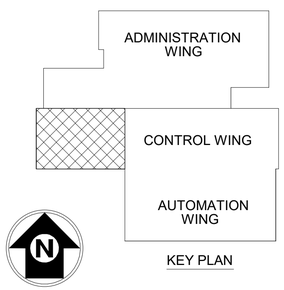

KEY PLAN

LIGHT FIXTURE SCHEDULE

NO	DESCRIPTION	VOLTS	MTG.	LENS	FINISH	LAMPS TYPE F	LAMPS TYPE H	LAMPS TYPE L	NO. OF LAMPS	LAMP TYPE	BALLAST/DRIVER TYPE S	BALLAST/DRIVER TYPE E	BALLAST/DRIVER TYPE 0	NO. PER LUMINAIRE	INPUT WATTS	MANUFACTURER & CATALOG NUMBER (NO SUBSTITUTIONS WITHOUT PRIOR APPROVAL) NOTE COMMISSION ALL LIGHTING...	DETAILS
T-1	LED LAY-IN	277	CEILING RECESSED	ACRYLIC	WHITE			*	1	LED 4000K		*		1	47.59	LITHONIA 2BLT4-60L-ADP-EZ1-LP840	DIMMING BALLAST (F8/E182)
T-1E	LED LAY-IN	277	CEILING RECESSED	ACRYLIC	WHITE			*	1	LED 4000K		*		1	47.59	LITHONIA 2BLT4-60L-ADP-EZ1-LP840	DIMMING BALLAST (F8/E182)
T-2	LED DOWN LIGHT	277	CEILING RECESSED	ACRYLIC	WHITE			*	1	LED 4000K		*		1	17.5	LITHONIA LDN6-40/15 LO6 AR LSS MVOLT EZ10	DIMMING BALLAST
T-2E	LED DOWN LIGHT	277	CEILING RECESSED	ACRYLIC	WHITE			*	1	LED 4000K		*		1	17.5	LITHONIA LDN6-40/15 LO6 AR LSS MVOLT EZ10	DIMMING BALLAST
T-3	EMERGENCY LIGHT	277	SURFACE	ACRYLIC	WHITE			*	1	LED		*		1	3.15	LITHONIA ELM4L	
E	EXIT LIGHT	120/277	WALL OR CEILING SURFACE	ACRYLIC	WHITE			*	1	LED		*		1		LITHONIA LHQM LED R HO RO	ARROWS WHERE SHOWN

REGISTERED PROFESSIONAL ENGINEER
MARC L. GOULD
E18329
ELECTRICAL
02/04/2022
STATE OF CALIFORNIA
EXPIRES: 03/31/2022

CLH ARCHITECTS ENGINEERS
Case, Lowe & Hart, Inc. 2484 Washington Blvd. Suite 510 Ogden, Utah 84401-2346 801.399.5821 www.clhac.com

E-Corp
BUILDING A WORLD OF DIFFERENCE

REV	APPROVED DATE	DESCRIPTION	JCN	REDLINE DATE	APVD

DEPARTMENT OF TRANSPORTATION
FEDERAL AVIATION ADMINISTRATION
ATO - TECHNICAL OPERATIONS — WESTERN SERVICE AREA

ARTCC
RECONFIGURE M1 ROOM
FIRST FLOOR LIGHTING PLAN

PALMDALE — LOS ANGELES CTR — CA

REVIEWED BY	SUBMITTED BY	APPROVED BY
	ART GAPASIN	DARYL KITCHEN
	PROJECT ENGINEER	MGR. ENGINEERING - LA

DESIGNED Designer — ISSUED BY ENGINEERING SERVICES ENROUTE/FSS — DATE 02.04.2021 — JCN 1004394
DRAWN J.M.S.
CHECKED K.J.L.
DRAWING NO ZLA-D-ARTCC- E178 — REV

19530
2/8/2022 8:04:18 AM

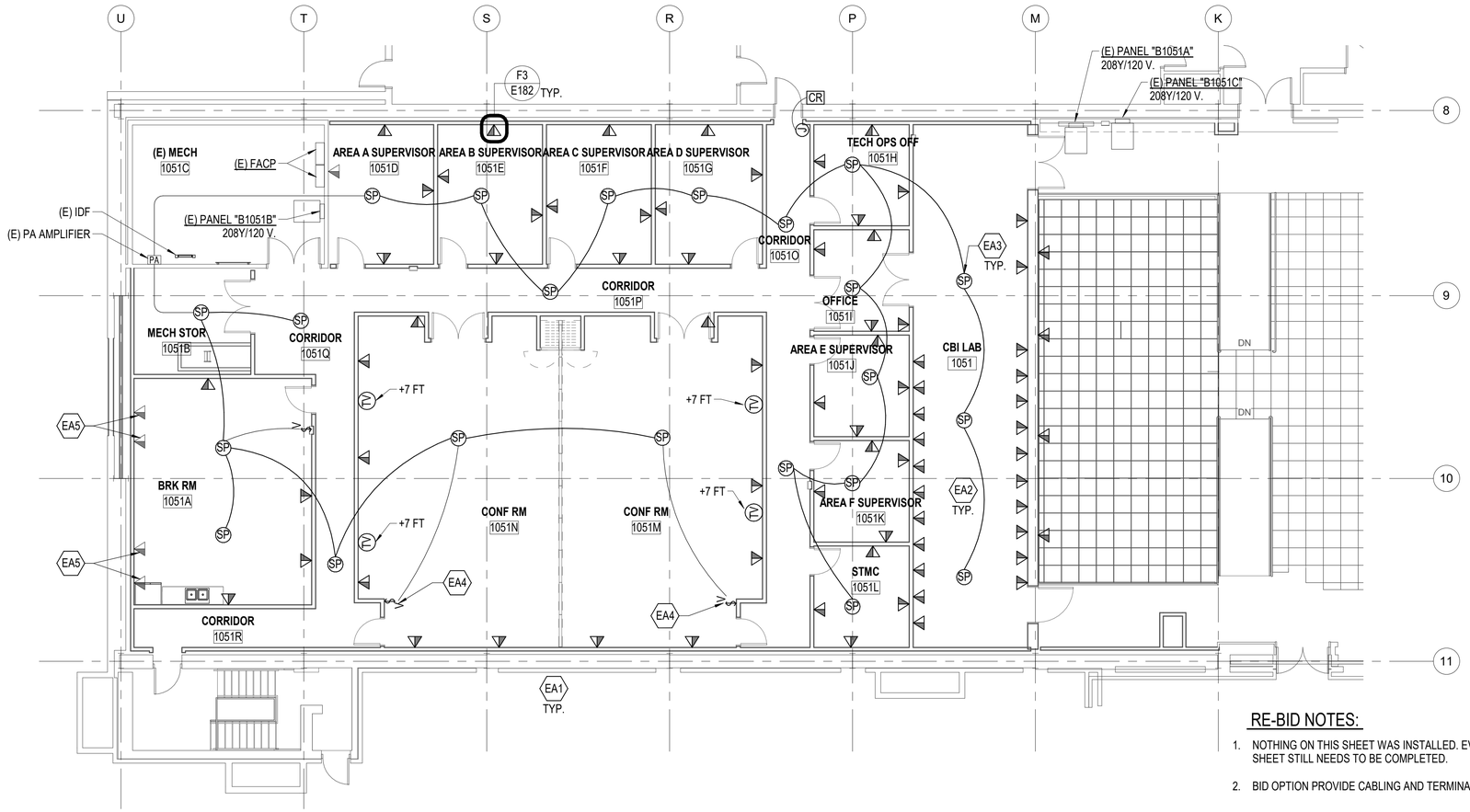

D1 FIRST FLOOR DATA / TELCO / PA SYSTEM PLAN
1/8" = 1'-0"

ELECTRICAL AUXILIARY KEYED NOTES

MARK	NOTE
EA1	FOR EACH 4 PORT TELCO/DATA OUTLET INSTALLED 4" x 4" OUTLET BOXES WITH LEVITON FACEPLATE. (CAT NO. 43080-2S4) AND 1 - 1" CONDUIT FROM THE TELEPHONE OUTLET BOX TO 6" ABOVE THE CEILING LEVEL INCLUDE A PULL STRING FOR ALL CONDUITS.
EA2	COORDINATE WITH UNICOR SUPPLIER TO PROVIDE TELCO / DATA OUTLETS FOR EACH EXISTING CBI UNITS.
EA3	INSTALL CEILING MOUNTED SPEAKERS WITH VOLUME CONTROL. INSTALL TWISTED PAIR #16 AWG IN 1/2" CONDUIT TO CONNECT TO SPEAKERS. COORDINATE WITH THE ARCH. DWG. FOR OTHER CEILING DEVICES.
EA4	INSTALL WALL MOUNTED SPEAKER ATTENUATOR IN A SINGLE GANG BOX IN THE CONFERENCE ROOM AS INDICATED. MOUNT THE ATTENUATOR AT 48" ABOVE FINISHED FLOOR.
EA5	EXISTING TELCO / DATA OUTLETS ALONG PERIMETER WALLS SHALL BE RELOCATED TO NEW STUD WALLS.

GENERAL NOTES:

A. ALL HORIZONTAL DATA / TELCO CABLE ARE NOT IN THE SCOPE OF THIS CONTRACT. THEY WILL BE INSTALLED BY OTHERS. COORDINATE WITH THE COR FOR THE CABLE INSTALLATION THAT MAY COINCIDE WITH THE CONTRACTOR'S SCOPE OF WORK.

RE-BID NOTES:

1. NOTHING ON THIS SHEET WAS INSTALLED. EVERYTHING ON THIS SHEET STILL NEEDS TO BE COMPLETED.
2. BID OPTION PROVIDE CABLING AND TERMINATIONS.

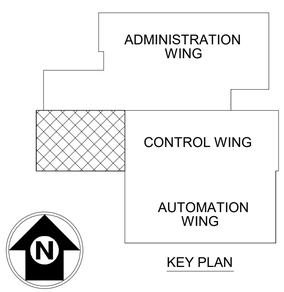

KEY PLAN

REGISTERED PROFESSIONAL ENGINEER
MARC L. GOULD
E18329
ELECTRICAL
02/04/2022
STATE OF CALIFORNIA
EXPIRES: 03/31/2022

CLH ARCHITECTS ENGINEERS
Case, Lowe & Hart, Inc. 2484 Washington Blvd. Suite 510 Ogden, Utah 84401-2346 801.399.5821 www.clhae.com

E-Corp
BUILDING A WORLD OF DIFFERENCE

REV	APPROVED DATE	DESCRIPTION	JCN	REDLINE DATE	APVD

DEPARTMENT OF TRANSPORTATION
FEDERAL AVIATION ADMINISTRATION
ATO - TECHNICAL OPERATIONS — WESTERN SERVICE AREA

ARTCC
RECONFIGURE M1 ROOM

FIRST FLOOR DATA / TELCO / PA SYSTEM PLAN

PALMDALE — LOS ANGELES CTR — CA

REVIEWED BY	SUBMITTED BY: ART GAPASIN, PROJECT ENGINEER		APPROVED BY: DARYL KITCHEN, MGR. ENGINEERING - LA
	DESIGNED: Designer	ISSUED BY: ENGINEERING SERVICES ENROUTE/FSS	DATE: 02.04.2021 — JCN: 1004394
	DRAWN: J.M.S.		DRAWING NO: ZLA-D-ARTCC- E180 — REV
	CHECKED: K.J.L.		

2/4/2022 9:26:12 AM 18530

CABLE TRAY KEYED NOTES

MARK	NOTE
CT1	PROVIDE A 2" CONDUIT BETWEEN THE PRESSURIZED AND NON-PRESSURIZED RAISED FLOOR AREA FOR FUTURE DATA CABLES.
CT2	PROVIDE AND INSTALL CABLE TRAY UNDERNEATH THE RAISED FLOOR. MATCH EXISTING CABLE TRAY IN THE CONTROL WING. CONTRACTOR SHALL FIELD VERIFY.
CT3	WHERE NEW CABLE TRAY SPLICES OCCUR, INSTALL SPLICE KIT (SWK FROM CABLOFIL), FOR A TOTAL OF 4 SPLICE CLIPS (SWK TYPE) FOR EACH SPLICE. MULTIPLE PLACES. COORDINATE WITH COR.
CT4	WHERE NEW CABLE TRAY INTERSECTIONS AND TEES OCCUR, INSTALL 90 DEGREE BENDS AND TEE BEND KIT (EZT 90 KIT FROM CABLOFIL) FOR CORNERS OF EACH SIDE OF INTERSECTIONS AND 2 CORNERS FOR TEES'S. MULTIPLE PLACES. COORDINATE WITH COR.
CT5	DO NOT ATTACH CABLE TRAY TO WALLS. MAINTAIN 3 INCH SEPARATION.
CT6	2 - 4" CONDUIT SLEEVES THROUGH WALL. LEAVE APPROX. 3" SLACK IN CABLES ON BOTH SIDES OF WALL.

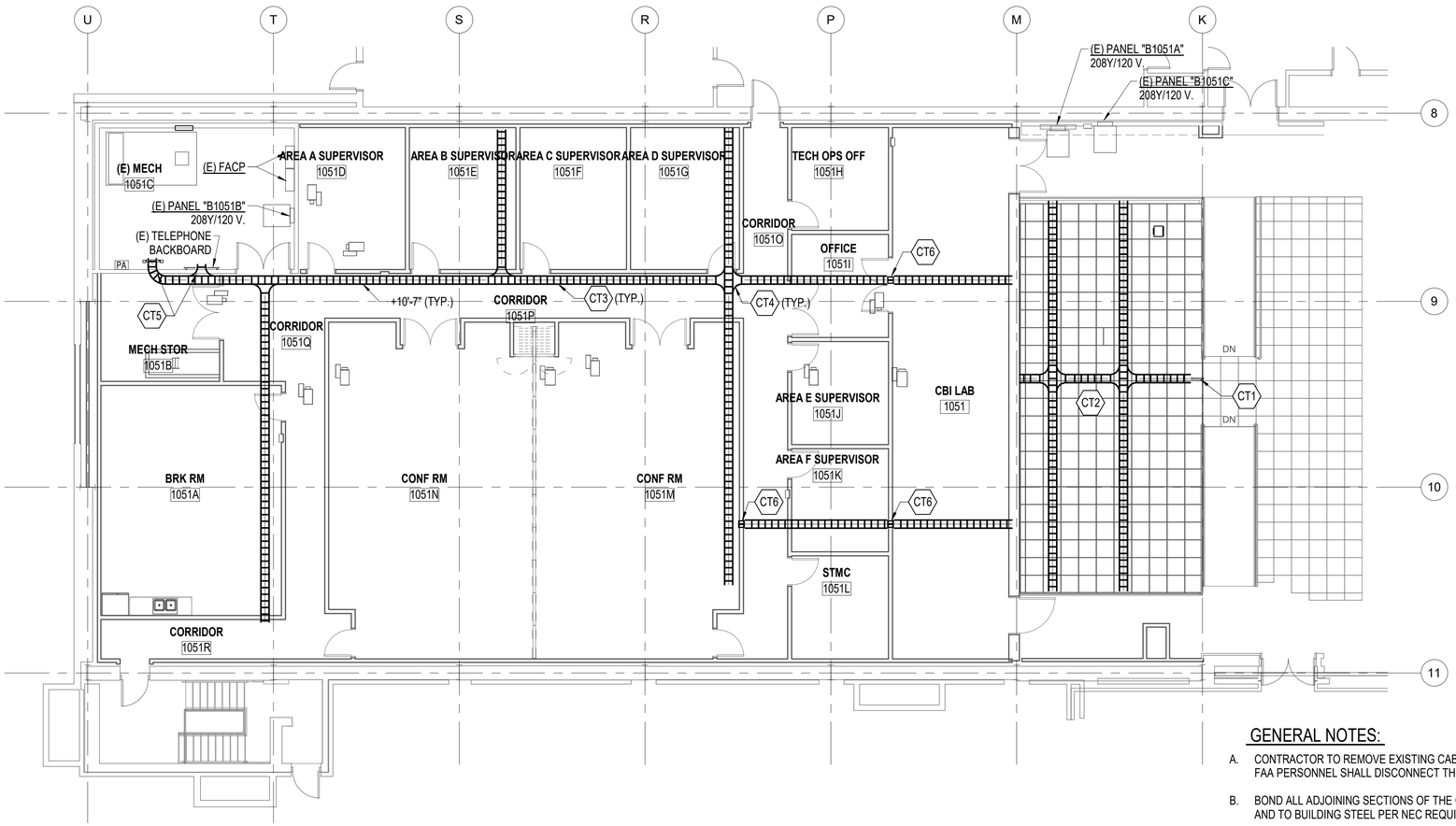

D1 FIRST FLOOR CABLE TRAY PLAN
1/8" = 1'-0"

GENERAL NOTES:

A. CONTRACTOR TO REMOVE EXISTING CABLES IN THE CABLE TRAY. FAA PERSONNEL SHALL DISCONNECT THEM FROM THIER RACKS.

B. BOND ALL ADJOINING SECTIONS OF THE CABLE TRAYS TOGETHER AND TO BUILDING STEEL PER NEC REQUIREMENTS.

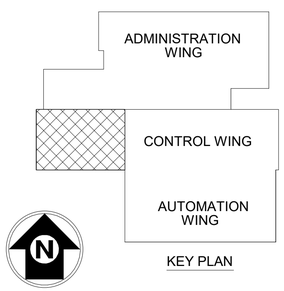

KEY PLAN

REV	APPROVED DATE	DESCRIPTION	JCN	REDLINE DATE	APVD

DEPARTMENT OF TRANSPORTATION
FEDERAL AVIATION ADMINISTRATION
ATO - TECHNICAL OPERATIONS — WESTERN SERVICE AREA

ARTCC RECONFIGURE M1 ROOM

FIRST FLOOR CABLE TRAY PLAN

PALMDALE — LOS ANGELES CTR — CA

REGISTERED PROFESSIONAL ENGINEER
MARC L. GOULD
E18329
ELECTRICAL
02/04/2022
STATE OF CALIFORNIA
EXPIRES: 03/31/2022

CLH ARCHITECTS ENGINEERS
Case, Lowe & Hart, Inc. 2484 Washington Blvd. Suite 510 Ogden, Utah 84401-2346
801.399.5821 www.clhae.com

E-Corp
BUILDING A WORLD OF DIFFERENCE

REVIEWED BY	SUBMITTED BY	APPROVED BY
	ART GAPASIN	DARYL KITCHEN
	PROJECT ENGINEER	MGR. ENGINEERING - LA

DESIGNED Designer	ISSUED BY	DATE 02.04.2021	JCN 1004394
DRAWN J.M.S.	ENGINEERING SERVICES ENROUTE/FSS	DRAWING NO ZLA-D-ARTCC- E181	REV
CHECKED K.J.L.			

2/4/2022 9:26:13 AM 18530

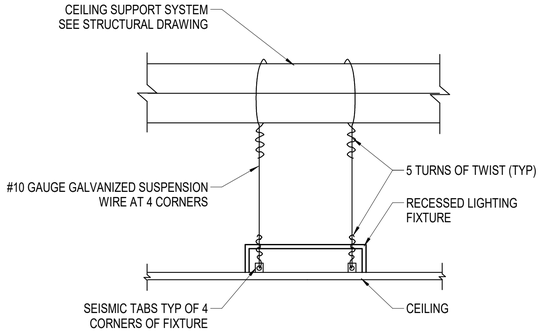

NOTES:

1. INSTALLATION AND SUPPORT OF LIGHTING FIXTURES SHALL MEET IBC CATEGORY D.

F8 RECESSED LIGHTING FIXTURE SUPPORT

NONE

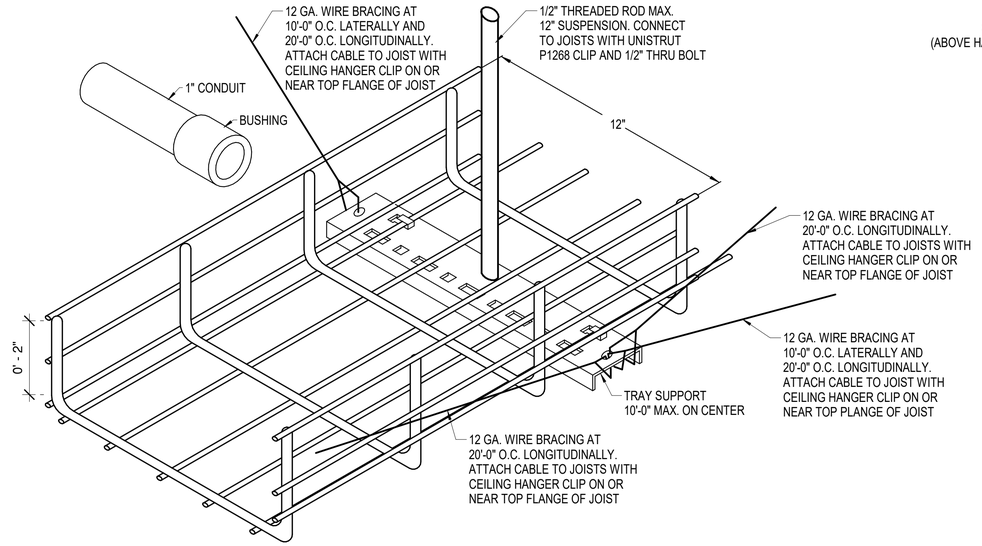

F6 CABLE TRAY

NONE

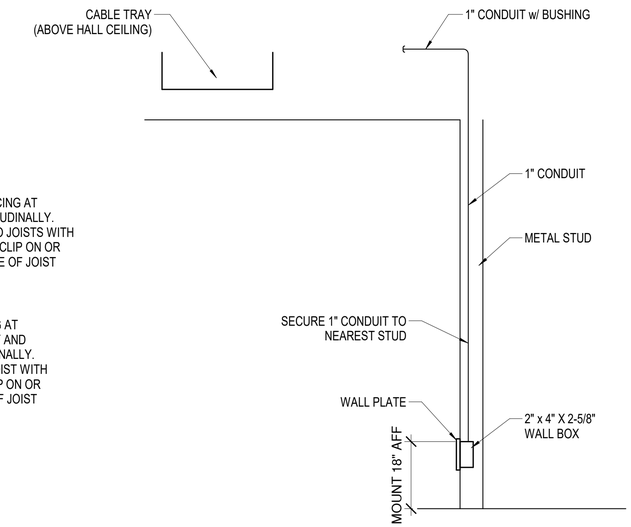

F3 TELCO/DATA CONDUIT DETAIL

NONE

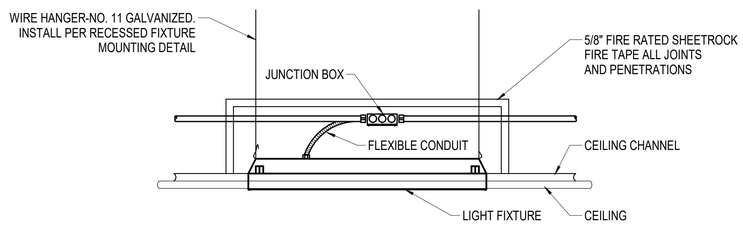

D8 FIRE RATED FIXTURE MOUNTING DETAIL

NONE

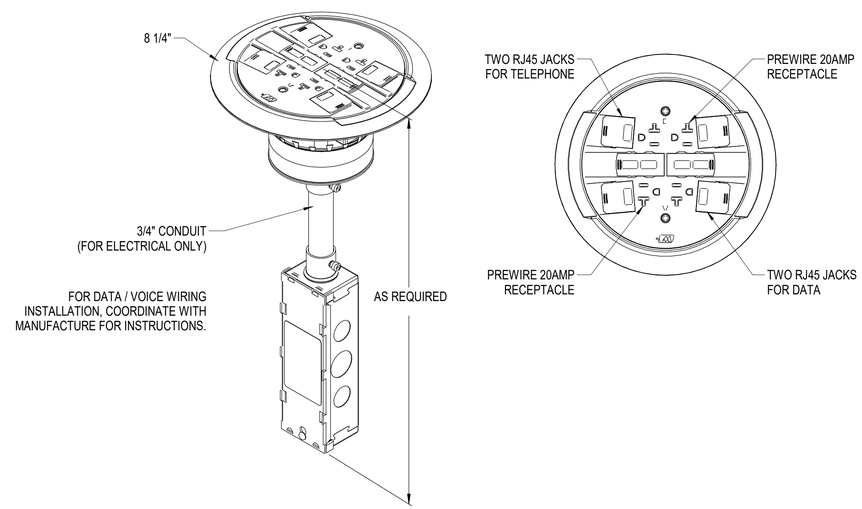

NOTES:

1. THE DEVICE INCLUDES TWO 20A DUPLEX RECEPTACLES. EACH DUPLEX RECEPTACLE IS WIRED AS A SEPARATE CIRCUIT (TWO CIRCUITS) THE DUPLEX CAN BE WIRED AS A STANDARD RECEPTACLE OR ISOLATED GROUND.
2. THIS DEVICE ALSO INCLUDES FOUR MODULAR JACKS. USE RJ-45 TYPE. THE RJ-45 JACKS WILL BE PROVIDED SEPARATELY.
3. THE CONTRACTOR SHALL COORDINATE WITH THE VENDOR FOR THE DEVICE INSTALLATION.

A5 COMBINATION FLOOR OUTLET POKE THRU TYPE

NONE

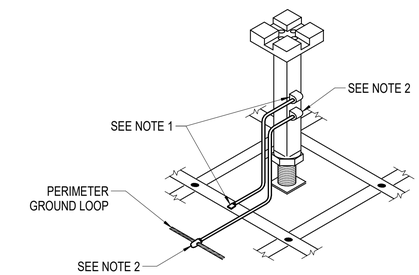

NOTES:

1. BOND EVERY THIRD RAISED FLOOR PEDESTAL IN EACH DIRECTION TO THE SRG USING A #6 AWG BARE COPPER CONDUCTOR AND EXOTHERMIC WELDS.
2. EVERY FIFTH PERIMETER ACCESS FLOOR PEDESTAL SHALL BE BONDED TO THE PERIMETER GROUND LOOP.

C2 CONTROL ROOM RAISED FLOOR PEDESTAL GROUNDING

NONE

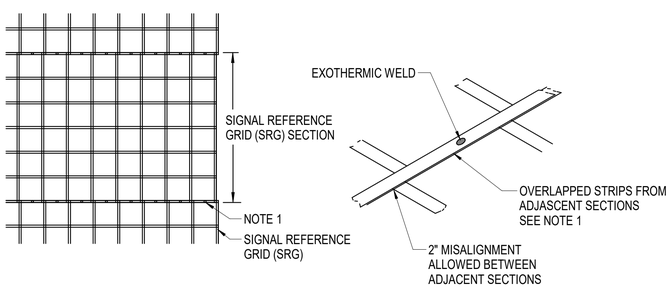

NOTES:

1. WHERE ONE SECTION OF GRID IS ATTACHED TO ANOTHER, THE OUTER EDGES OF THE ROLLS SHALL OVERLAP TO FORM A SINGLE STRIP AND SHALL BE EXOTHERMICALLY WELDED TOGETHER AT 2 FOOT INTERVALS.

A8 SRG GRID TO GRID CONNECTION

NONE

REGISTERED PROFESSIONAL ENGINEER
MARC L. GOULD
E18329
ELECTRICAL
02/04/2022
STATE OF CALIFORNIA
EXPIRES: 03/31/2022

CLH ARCHITECTS ENGINEERS
Case, Lowe & Hart, Inc. 2484 Washington Blvd. Suite 510 Ogden, Utah 84401-2346 801.399.5821 www.clhae.com

E-Corp
BUILDING A WORLD OF DIFFERENCE

REV	APPROVED DATE	DESCRIPTION	JCN	REDLINE DATE	APVD

DEPARTMENT OF TRANSPORTATION
FEDERAL AVIATION ADMINISTRATION
ATO - TECHNICAL OPERATIONS — WESTERN SERVICE AREA

ARTCC
RECONFIGURE M1 ROOM

ELECTRICAL DETAILS

PALMDALE — LOS ANGELES CTR — CA

REVIEWED BY	SUBMITTED BY	APPROVED BY
	ART GAPASIN	DARYL KITCHEN
	PROJECT ENGINEER	MGR. ENGINEERING - LA

DESIGNED Designer	ISSUED BY	DATE 02.04.2021	JCN 1004394
DRAWN J.M.S.	ENGINEERING SERVICES ENROUTE/FSS	DRAWING NO ZLA-D-ARTCC- E182	REV
CHECKED K.J.L.			

2/4/2022 9:26:14 AM 19530

PANEL:	(E) B1051A-DEMO	MAIN BREAKER	250	VOLTAGE:	208 Y/ 120	PHASE:	3	WIRE:	4	NEMA:	1
MAINS:	400 AMPS	MOUNTING:	FLUSH	LOCATION	CONTROL RM 1052	REMARKS:	EATON PRL 1A				

LOAD DESCRIPTION	WIRE	P	AMP	CKT	KVA PWR	KVA LTS	KVA C.O.	PHASE A	PHASE B	PHASE C	KVA C.O.	KVA LTS	KVA PWR	CKT	AMP	P	WIRE	LOAD DESCRIPTION
				1				0.00						2				
PANEL B1051B	12	3	100	3					0.00					4	100	3	2	PANEL B1051C
				5						0.00				6				
J-BOX NORTH ISLAND	12	1	20	7				0.00						8	20	1	12	CBI ISLAND WEST #1
J-BOX NORTH ISLAND	12	1	20	9					0.00					10	20	1	12	CBI ISLAND WEST #4
J-BOX NORTH ISLAND	12	1	20	11						0.00				12	20	1	12	RECEPT N. WALL EAST
RECEPT EAST WALL NORTH	12	1	20	13				0.00						14	20	1	12	J-BOX SOUTH ISLAND
RECEPT EAST WALL NORTH	12	1	20	15					0.00					16	20	1	12	J-BOX SOUTH ISLAND
RECEPT WEST WALL	12	1	20	17						0.00				18	20	1	12	J-BOX SOUTH WALL
RECEPT NORTH WALL	12	1	20	19				0.00						20	20	1	12	J-BOX WEST END
J-BOX CBI ISLAND EAST #1	12	1	20	21					0.00					22	20	1	12	J-BOX WEST END
J-BOX CBI ISLAND EAST #4	12	1	20	23						0.00				24	20	1	12	J-BOX NORTH WALL
RECEPT SOUTH CBI 105	12	1	20	25				0.00						26	20	1	12	J-BOX NORTH WALL
RECEPT SOUTH CBI 105	12	1	20	27					0.00					28	20	1	12	J-BOX NORTH WALL
RECEPT SOUTH CBI 105	12	1	20	29						0.00				30	20	1	12	SPARE
SPARE	12	1	20	31				0.00						32	20	1	12	SPARE
SPARE	12	1	20	33					0.00					34	20	1	12	SPARE
RECEPT EAST WALL SOUTH	12	1	20	35						0.00				36	20	1	12	SPARE
SPARE	12	1	20	37				0.00						38	20	1	12	SPARE
SPARE	12	1	20	39					0.00					40	20	1	12	SPARE
SPARE	12	1	20	41						0.00				42	20	1	12	SPARE
SUB-TOTAL (KVA)					0.00	0.00	0.00	0.00	0.00	0.00	0.00	0.00	0.00					

*PROVIDE GFCI BREAKER			TYPE OF LOAD	CONNECTED	DIVERSITY	DEMAND
**PROVIDE UL LISTED FIRE ALARM BREAKER HANDLE			LIGHTING	0.00	100%	0.00
			POWER	0.00	70%	0.00
			C.O.	0.00	NEC 220.44	0.00
PANEL LOADING	0%		TOTAL	0.00	KVA	0.00
4/8/2020 17:22			TOTAL	0	AMPS	0

PANEL:	(E) B1051A	MAIN BREAKER	250	VOLTAGE:	208 Y/ 120	PHASE:	3	WIRE:	4	NEMA:	1
MAINS:	400 AMPS	MOUNTING:	FLUSH	LOCATION	MECH ROOM	REMARKS:	EATON PRL 1A				

LOAD DESCRIPTION	WIRE	P	AMP	CKT	KVA PWR	KVA LTS	KVA C.O.	PHASE A	PHASE B	PHASE C	KVA C.O.	KVA LTS	KVA PWR	CKT	AMP	P	WIRE	LOAD DESCRIPTION
				1	0.83	0.00	4.02	5.59			0.24	0.00	0.50	2				
PANEL B1051B	12	3	100	3	0.83	0.00	4.02		5.59		0.24	0.00	0.50	4	100	3	2	PANEL B1051C
				5	0.83	0.00	4.02			5.59	0.24	0.00	0.50	6				
OFFICE	12	1	20	7			0.90	1.80			0.90			8	20	1	12	OFFICE
OFFICE	12	1	20	9			0.90		1.80		0.90			10	20	1	12	OFFICE
OFFICE	12	1	20	11			0.90			0.90				12	20	1	12	SPARE
SPARE	12	1	20	13				0.90			0.90			14	20	1	12	OFFICE
SPARE	12	1	20	15					0.90		0.90			16	20	1	12	OFFICE
OFFICE	12	1	20	17			0.90			0.90				18	20	1	12	SPARE
OFFICE	12	1	20	19			0.90	1.80			0.90			20	20	1	12	CONFERENCE RM
SPARE	12	1	20	21					0.90		0.90			22	20	1	12	CONFERENCE RM
SPARE	12	1	20	23						0.90	0.90			24	20	1	12	CONFERENCE RM
VAV-7,8	12	1	20	25		0.72		1.62			0.90			26	20	1	12	CONFERENCE RM
VAV-9,10	12	1	20	27		0.72			0.72					28	20	1	12	SPARE
SPARE	12	1	20	29						0.00				30	20	1	12	SPARE
IN-LINE FAN	12	1	20	31		0.20		0.74			0.54			32	20	1	12	CBI LAB WEST
SPARE	12	1	20	33					0.50		0.50			34	20	1	12	CBI LAB WEST
SPARE	12	1	20	35						0.50	0.50			36	20	1	12	CBI LAB WEST
SPARE	12	1	20	37				0.50			0.50			38	20	1	12	CBI LAB EAST
SPARE	12	1	20	39					0.50		0.50			40	20	1	12	CBI LAB EAST
SPARE	12	1	20	41						0.72	0.72			42	20	1	12	CBI LAB EAST
SUB-TOTAL (KVA)					2.50	1.64	16.56	12.95	10.91	9.51	11.18	0.00	1.50					

*NEW LOAD			TYPE OF LOAD	CONNECTED	DIVERSITY	DEMAND
**PROVIDE UL LISTED FIRE ALARM BREAKER HANDLE			LIGHTING	1.64	100%	1.64
			POWER	4.00	70%	2.80
			C.O.	27.74	NEC 220.44	18.90
PANEL LOADING	26%		TOTAL	33.38	KVA	23.34

REGISTERED PROFESSIONAL ENGINEER
MARC L. GOULD
E18329
ELECTRICAL
02/04/2022
STATE OF CALIFORNIA
EXPIRES: 03/31/2022

CLH ARCHITECTS ENGINEERS
Case, Lowe & Hart, Inc. 2484 Washington Blvd. Suite 510 Ogden, Utah 84401-2346
801.399.5821 www.clhae.com

E-Corp
BUILDING A WORLD OF DIFFERENCE

REV	APPROVED DATE	DESCRIPTION	JCN	REDLINE DATE	APVD

DEPARTMENT OF TRANSPORTATION
FEDERAL AVIATION ADMINISTRATION
ATO - TECHNICAL OPERATIONS WESTERN SERVICE AREA

ARTCC
RECONFIGURE M1 ROOM

PANEL SCHEDULES

PALMDALE LOS ANGELES CTR CA

REVIEWED BY	SUBMITTED BY	APPROVED BY
	ART GAPASIN	DARYL KITCHEN
	PROJECT ENGINEER	MGR. ENGINEERING - LA

DESIGNED Designer	ISSUED BY	DATE 02.04.2021	JCN 1004394
DRAWN J.M.S.	ENGINEERING SERVICES ENROUTE/FSS	DRAWING NO ZLA-D-ARTCC- E183	REV
CHECKED K.J.L.			

2/4/2022 9:26:14 AM 18530

PANEL:	(E) B1051B	MAIN BREAKER	100	VOLTAGE:	208 Y/ 120	PHASE:	3	WIRE:	4	NEMA:	1
MAINS:	125 AMPS	MOUNTING:	SURFACE	LOCATION	MECH RM.	REMARKS:	EATON PRL 1A				

LOAD DESCRIPTION	WIRE	P	AMP	CKT	KVA PWR	KVA LTS	KVA C.O.	PHASE A	PHASE B	PHASE C	KVA C.O.	KVA LTS	KVA PWR	CKT	AMP	P	WIRE	LOAD DESCRIPTION
RECEPT	12	1	20	1			0.90	1.40					0.50	2	20	1	12	VAV-1,2,3
RECEPT	12	1	20	3			0.90		1.40				0.50	4	20	1	12	VAV-4,5,6
RECEPT	12	1	20	5			0.90			1.26	0.36			6	20	1	12	MECH RM OUTLET
RECEPT	12	1	20	7			0.90	1.26			0.36			8	20	1	12	MECH RM OUTLET
RECEPT	12	1	20	9			0.90		0.90					10	20	1	12	SPARE
RECEPT	12	1	20	11			0.90			0.90				12	20	1	12	SPARE
RECEPT	12	1	20	13			0.90	0.90						14	20*	1	12	SPARE
RECEPT	12	1	20	15			0.90		1.40				0.50	16	20	1	12	P-200
RECEPT	12	1	20	17			0.90			1.40			0.50	18	20	1	12	DOCCP
RECEPT	12	1	20	19			0.90	0.90						20	20	1	12	SPARE
J-BOX SPECIALIST RM	12	1	20	21			0.90		0.90					22	20*	1	12	OFFICE
J-BOX SPECIALIST RM	12	1	20	23			0.90			0.90				24	20*	1	12	OFFICE
SPARE	12	1	20	25				0.00						26	20*	1	12	OFFICE
MAC PANEL RM 125	12	1	20	27	0.50				0.50					28	20*	1	12	OFFICE
OUTLET PANEL ATTIC	12	1	20	29			0.18			0.18				30	20	1	12	SPARE
FLOOR RECEPTS.	12	1	20	31			0.36	0.36						32	20	1	12	SPARE
FLOOR RECEPTS.	12	1	20	33			0.36		0.36					34	20	1	12	SPARE
FLOOR RECEPTS.	12	1	20	35			0.36			0.36				36	20	1	12	SPARE
SPARE	12	1	20	37				0.00						38	20	1	12	SPARE
SPARE	12	1	20	39					0.00					40	20	1	12	SPARE
SPARE	12	1	20	41						0.00				42	20	1	12	SPARE
SUB-TOTAL (KVA)					0.50	0.00	12.06	4.82	5.46	5.00	0.72	0.00	2.00					

*NEW LOAD ON EXITING BREAKER		TYPE OF LOAD	CONNECTED	DIVERSITY	DEMAND
**PROVIDE UL LISTED FIRE ALARM BREAKER HANDLE		LIGHTING	0.00	100%	0.00
***NEW LOAD ON NEW BREAKER		POWER	2.50	70%	1.80
		C.O.	12.78	NEC 220.44	11.40
PANEL LOADING	37%	TOTAL	15.28	KVA	13.20
7/10/2020 11:46		TOTAL	43	AMPS	37

PANEL:	(E) B1051C	MAIN BREAKER	100	VOLTAGE:	208 Y/ 120	PHASE:	3	WIRE:	4	NEMA:	1
MAINS:	125 AMPS	MOUNTING:	FLUSH	LOCATION	CONTROL RM 1052	REMARKS:	EATON PRL 1A				

LOAD DESCRIPTION	WIRE	P	AMP	CKT	KVA PWR	KVA LTS	KVA C.O.	PHASE A	PHASE B	PHASE C	KVA C.O.	KVA LTS	KVA PWR	CKT	AMP	P	WIRE	LOAD DESCRIPTION
CONTROL ROOM WEST WALL	12	1	20*	1			0.36	0.36						2	20	1	12	SPARE
CONTROL ROOM WEST WALL	12	1	20*	3			0.36		0.36					4	20	1	12	SPARE
SPARE	12	1	20	5						0.50			0.50	6	20**	1	12	DCN36 PNL CWA FACP (K.36)
SPARE	12	1	20	7				0.50					0.50	8	20**	1	12	JCI FIRE PNL CW 1 FACP (K.25)
SPARE	12	1	20	9					0.50				0.50	10	20**	1	12	NCCU-3 FIRE SYS RM B120...
SPARE	12	1	20	11						0.00				12	20	1	12	SPARE
SPARE	12	1	20	13				0.00						14	20	1	12	SPARE
SPARE	12	1	20	15					0.00					16	20	1	12	SPARE
SPARE	12	1	20	17						0.00				18	20	1	12	SPARE
SPARE	12	1	20	19				0.00						20	20	1	12	SPARE
SPARE	12	1	20	21					0.00					22	20	1	12	SPARE
SPARE	12	1	20	23						0.00				24	20	1	12	SPARE
SPARE	12	1	20	25				0.00						26	20	1	12	SPARE
SPARE	12	1	20	27					0.00					28	20	1	12	SPARE
SPARE	12	1	20	29						0.00				30	20	1	12	SPARE
BLANK	12	1	20	31				0.00						32	20	1	12	BLANK
BLANK	12	1	20	33					0.00					34	20	1	12	BLANK
BLANK	12	1	20	35						0.00				36	20	1	12	BLANK
BLANK	12	1	20	37				0.00						38	20	1	12	BLANK
BLANK	12	1	20	39					0.00					40	20	1	12	BLANK
BLANK	12	1	20	41						0.00				42	20	1	12	BLANK
SUB-TOTAL (KVA)					0.00	0.00	0.72	0.86	0.86	0.50	0.00	0.00	1.50					

*NEW LOAD		TYPE OF LOAD	CONNECTED	DIVERSITY	DEMAND
**PROVIDE UL LISTED FIRE ALARM BREAKER HANDLE		LIGHTING	0.00	100%	0.00
		POWER	1.50	70%	1.10
		C.O.	0.72	NEC 220.44	0.80
PANEL LOADING	6%	TOTAL	2.22	KVA	1.90
4/27/2020 17:04		TOTAL	7	AMPS	6

REGISTERED PROFESSIONAL ENGINEER
MARC L. GOULD
E18329
ELECTRICAL
02/04/2022
STATE OF CALIFORNIA
EXPIRES: 03/31/2022

CLH ARCHITECTS ENGINEERS
Case, Lowe & Hart, Inc. 2484 Washington Blvd.
Suite 510 Ogden, Utah 84401-2346
801.399.5821 www.clhae.com

E-Corp
BUILDING A WORLD OF DIFFERENCE

REV	APPROVED DATE	DESCRIPTION	JCN	REDLINE DATE	APVD

DEPARTMENT OF TRANSPORTATION
FEDERAL AVIATION ADMINISTRATION
ATO - TECHNICAL OPERATIONS — WESTERN SERVICE AREA

ARTCC
RECONFIGURE M1 ROOM

PANEL SCHEDULES

PALMDALE — LOS ANGELES CTR — CA

REVIEWED BY	SUBMITTED BY: ART GAPASIN, PROJECT ENGINEER		APPROVED BY: DARYL KITCHEN, MGR. ENGINEERING - LA
	DESIGNED: Designer	ISSUED BY: ENGINEERING SERVICES ENROUTE/FSS	DATE: 02.04.2021 — JCN: 1004394
	DRAWN: J.M.S.		DRAWING NO: ZLA-D-ARTCC- E184 — REV
	CHECKED: K.J.L.		

2/4/2022 9:26:15 AM
16530